SAN BERNARDINO COUNTY TRANSPORTATION DEPARTMENT
STANDARD DRAWINGS
Table of Contents -

DWG	DESCRIPTION		UPDATE
100	MAJOR DIVIDED HIGHWAY		JUNE 1965
100A	MAJOR ARTERIALS		DEC. 1981
100B	MAJOR ARTERIALS		
101	MAJOR HIGHWAY		DEC. 1981
102	SECONDARY HIGHWAY		DEC. 1981
102A	MAJOR HIGHWAY (Chino Hills Specific Plan Area)		
103	COLLECTOR STREET		MAY 1974
103b	INDUSTRIAL COLLECTOR		MAR. 1994
104	LOCAL STREET		MAY 1974
104A	LOCAL STREET (Less than 1000 ADT)		DEC. 1981
105	INTERSECTION DESIGN FRONTAGE STREET		FEB. 1979
106	FRONTAGE ROAD AND STREET		APR. 1965
106a	FRONTAGE ROAD AND STREET		JAN. 1968
107	INTERSECTION DESIGN DESERT ROAD		APR. 1965
109	SIDEWALK		MAR. 1975
110 1of 2	CURB RETURN WITH SIDEWALK RAMP		DEC. 2005
110 2 of 2	SIDEWALK RAMP		DEC. 2005
110	SIDEWALK RAMP	(superceded)	JAN. 1988
110A	SIDEWALK RAMP	(superceded)	JAN. 1988
110B	SIDEWALK RAMP	(superceded)	JAN. 1988
110C	SIDEWALK RAMP	(superceded)	JAN. 1988
110D	SIDEWALK RAMP	(superceded)	AUG. 1989
111	HALF WIDTH LOCAL STREET		MAY 1965
112	HALF WIDTH DESERT ROAD - (TYPICAL SECTION)		MAY 1965
113	HALF WIDTH DESERT ROAD - (PLAN)		MAY 1965
114	GRADED ROAD		MAY 1974
114a	PAVED ROAD		MAY 1965
114b	PAVED ROAD (MOUNTAIN AREAS)		AUG. 1980
114c	HILLSIDE PAVED ROAD		MAR. 1994
115	8" CURB AND GUTTER		FEB. 1979
116	6" CURB AND GUTTER		FEB. 1979
116A	12" CURB AND GUTTER		
117	8" ASPHALT CONCRETE DIKE		JUNE 1965
117A	6" ASPHALT CONCRETE DIKE		MAR. 1994
117B	12" ASPHALT CONCRETE DIKE		
118	8" TRAVERSABLE DIKE		
118A	6" TRAVERSABLE DIKE		
119	6' CROSS GUTTER		APR. 1965
119A	12' CROSS GUTTER		
120	CUL-DE-SAC		FEB. 1979
120A	OFFSET CUL-DE-SAC		
121	INTERSECTION DESIGN "L" SHAPE (60' R/W)		FEB. 1979
121A	INTERSECTION DESIGN "L" SHAPE (50' R/W)		AUG. 1989

125	ALLEY	APR. 1965
127	CURB CUT OFF WALL	APR. 1965
127	CURB & SIDEWALK CUT OFF WALL	
127A	ASPHALT CONCRETE CUT OFF WALL	
128	RESIDENTIAL DRIVEWAY APPROACH WITH CURB	MAR. 1994
128a	RESIDENTIAL DRIVEWAY APPROACH WITHOUT CURB	MAR. 1994
129	COMMERCIAL DRIVEWAY WITH A.C. APPROACH	MAR. 1994
129A	COMMERCIAL DRIVEWAY APPROACH WITHOUT CURB	MAR. 1994
129B	COMMERCIAL DRIVEWAY WITH CURB RETURNS	DEC. 2005
130	DRIVEWAY SPACING	MAR. 1994
131	DRIVEWAY GRADES	MAR. 1994
130	DRIVEWAY REQUIREMENTS (VALLEY & DESERT)	
130	DRIVEWAY SPACING	
135	RESIDENTIAL DRIVEWAY WITH A.C. APPROACH	
135a	RESIDENTIAL DRIVEWAY WITH DEPRESSED DIKE APPROACH	
135b 1 of 2	RESIDENTIAL DRIVEWAY WITH CURB & 6' APPROACH	
135b 2 of 2		
135c 1 of 2	RESIDENTIAL DRIVEWAY WITH CURB & 6' APPROACH	
135c 2 of 2		
136	COMMERCIAL DRIVEWAY WITH A.C. APPROACH	
136a	COMMERCIAL DRIVEWAY WITH DEPRESSED DIKE APPROACH	
136b 1 of 2	COMMERCIAL DRIVEWAY WITH CURB & 6' APPROACH & S/W	
136b 2 of 2		
136c 1 of 2	COMMERCIAL DRIVEWAY WITH CURB, 6' APP. & 10' S/W	
136c 2 of 2		
137	COMMERCIAL DRIVEWAY WITH CURB RETURNS	
200	CUTOFF WALL FOR DRAINAGE CHANNEL	JULY 1966
200A	CHANNEL CROSSING	JULY 1965
201	GRAVITY HEADWALL	JULY 1965
202	CATCH BASIN MOUNTAIN ROADS (PLAN & PROFILE)	JULY 1965
202a	CATCH BASIN MOUNTAIN ROADS (DETAIL PLAN & SECTION)	OCT. 1965
203	LOCAL DEPRESSION	AUG. 1989
203A	LOCAL DEPRESSION	AUG. 1989
203B	LOCAL DEPRESSION	AUG. 1989
204	MANHOLE FRAME AND COVER - PARKWAY	JULY 1974
205	36" MANHOLE FRAME AND COVER - ROADWAY	JAN. 1996
205A	36" MANHOLE FRAME AND COVER - PARKWAY	
205B	CONCRETE RIBBON	
206	TYPE "A" CATCH BASIN	JAN. 1996
206a	CATCH BASIN OPENING	DEC. 1974
206B	GALVANIZED STEEL STEP	JAN. 1996
208	STORM DRAIN CLEANOUT	JAN. 1996
209	HEADWALL WING - TYPE	JULY 1965
209A	HEADWALL 'U' - TYPE	JULY 1965
210	CURB OUTLET STRUCTURE	AUG. 1989
210A	OUTLET STRUCTURE	AUG. 1989
211	PARKWAY CULVERT W/ STEEL PLATE COVER	AUG. 1989
300	RIGHT OF WAY FENCE	JULY 1965

301	NON RETAINING CONCRETE BLOCK WALL	MAR. 1975
301a	RETAINING CONCRETE BLOCK WALL	JULY 1966
302	BLOCK WALL LOCATION AT INTERSECTION	DEC. 2005
303	STREET MARKER -- DETAIL & SPECS.	OCT. 1981
303a	STREET MARKER (TYPICAL LOCATION)_	MAR. 1994
303b	STREET MARKER (POST INSTALLATION)	OCT. 1981
303c	STREET MARKER (DESERT ROAD 2-1/2 ACRE)	JAN. 1971
304	MARKERS	OCT. 1981
304A	MARKERS	AUG. 1989
305	BARRICADE URBAN AREA	JULY 1995
305a	END OF STREET TEMPORARY PAVEMENT	OCT. 1981
305B	BARRICADE (RURAL AREA)	JULY 1995
305C	ROAD CLOSURE BARRICADE	JULY 1995
305D	ROAD CLOSURE BARRICADE WITH DETOUR	JULY 1995
305E	PARTIAL ROAD CLOSURE BARRICADE WITH DETOUR	JULY 1995
305F	PARTIAL ROAD CLOSURE BARRICADE	JULY 1995
306	POST WITH REFLECTOR	MAR. 1994
307	STRIPING DETAILS	DEC. 2005
307a	STRIPING DETAILS	DEC. 2005
307b	STRIPING DETAILS	DEC. 2005
307c	STRIPING DETAILS	DEC. 2005
307d	STRIPING DETAILS	DEC. 2005
307e	PAVEMENT MARKER (TYPE A)	
308	METAL BEAM GUARDRAIL	OCT. 1981
309	METAL PLATE GUARDRAIL	JULY 1965
310	FIRE HYDRANT LOCATION	DEC. 2005
311	UNDERGROUND UTILITY LOCATION	JULY 1972
311A	MANHOLE APRON PAVED ROAD	AUG. 1995
312	MAILBOX INSTALLATION	AUG. 1989
312A	MULTIBLE MAILBOX INSTALLATION (NEW SIDEWALK)	AUG. 1989
312B	MULTIBLE MAILBOX INSTALLATION (EXISTING SIDEWALK)	AUG. 1989

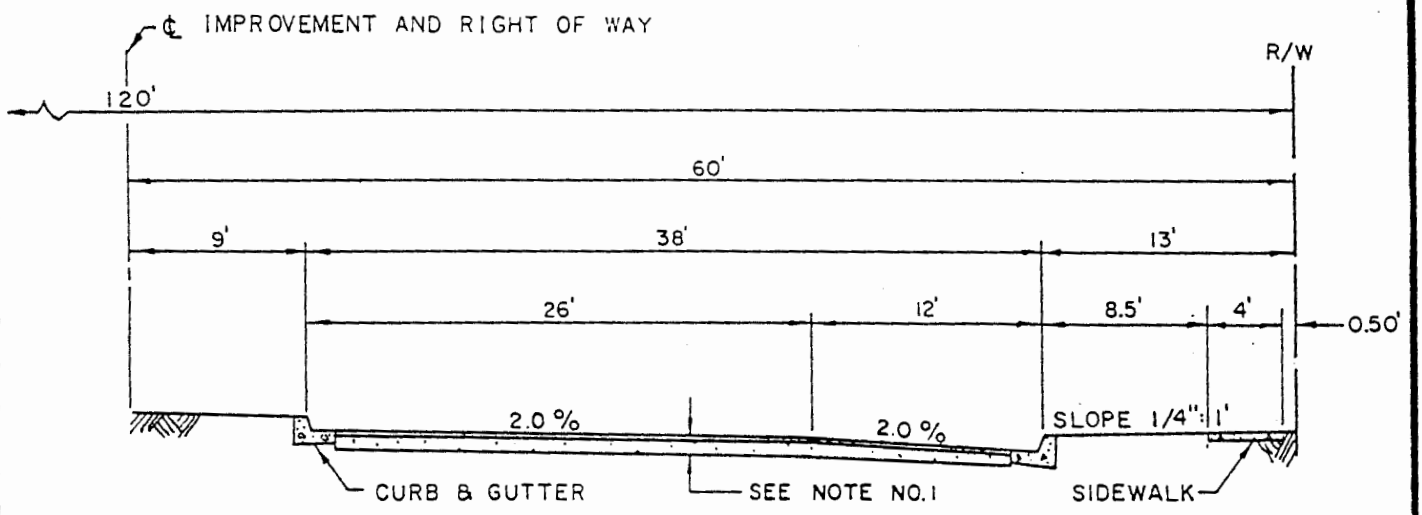

TYPICAL HALF SECTION

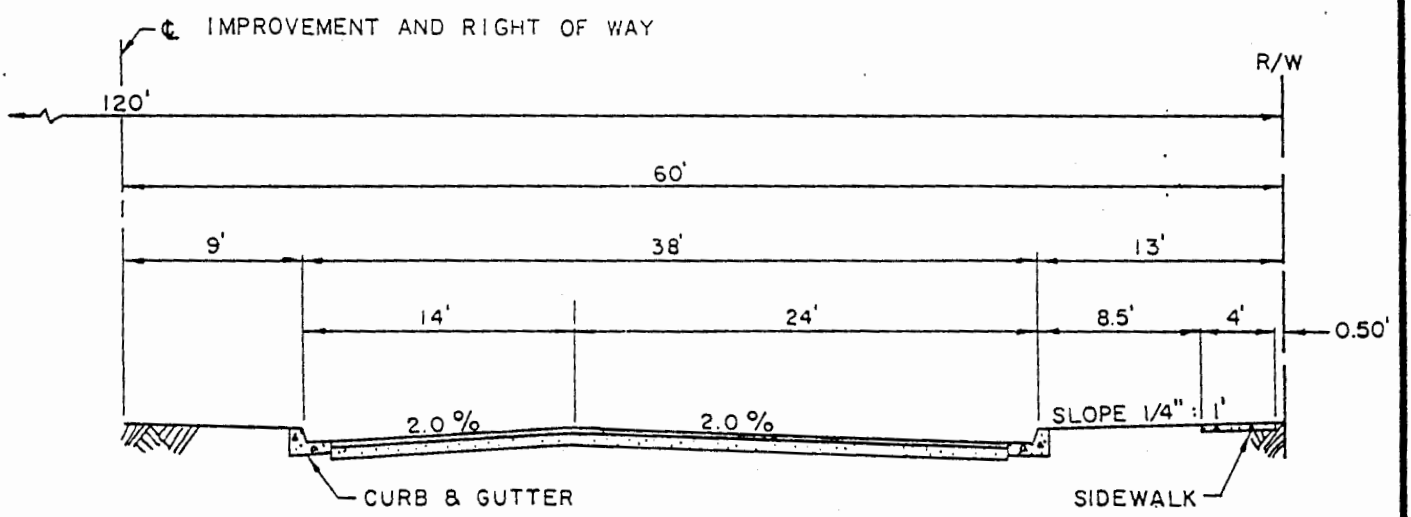

TYPICAL HALF SECTION

NOTES:

1. STRUCTURAL SECTION OF ROADWAY SHALL BE DETERMINED FROM SOILS TESTS AND SO INDICATED ON CONSTRUCTION PLANS.
2. CONSTRUCTION OUTSIDE R/W LINE SHALL REQUIRE SLOPE EASEMENTS.

SAN BERNARDINO COUNTY ROAD DEPARTMENT DATE: F.V.C. 6-65 R.I 4-92	KEN A. MILLER Director of Transportation	MAJOR DIVIDED HIGHWAY	100

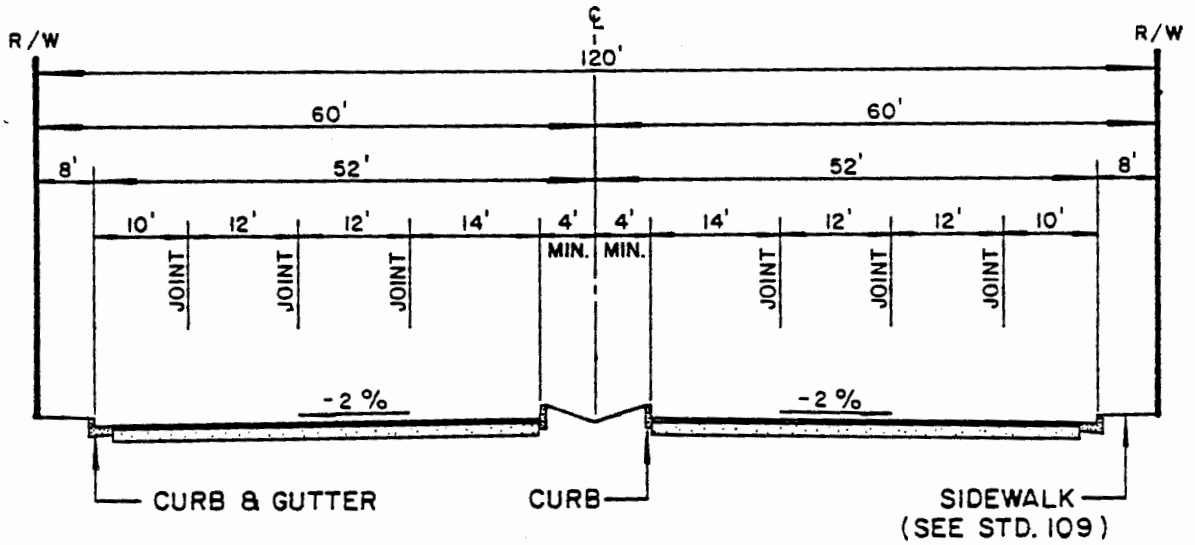

TYPICAL SECTION

WITH RAISED MEDIAN

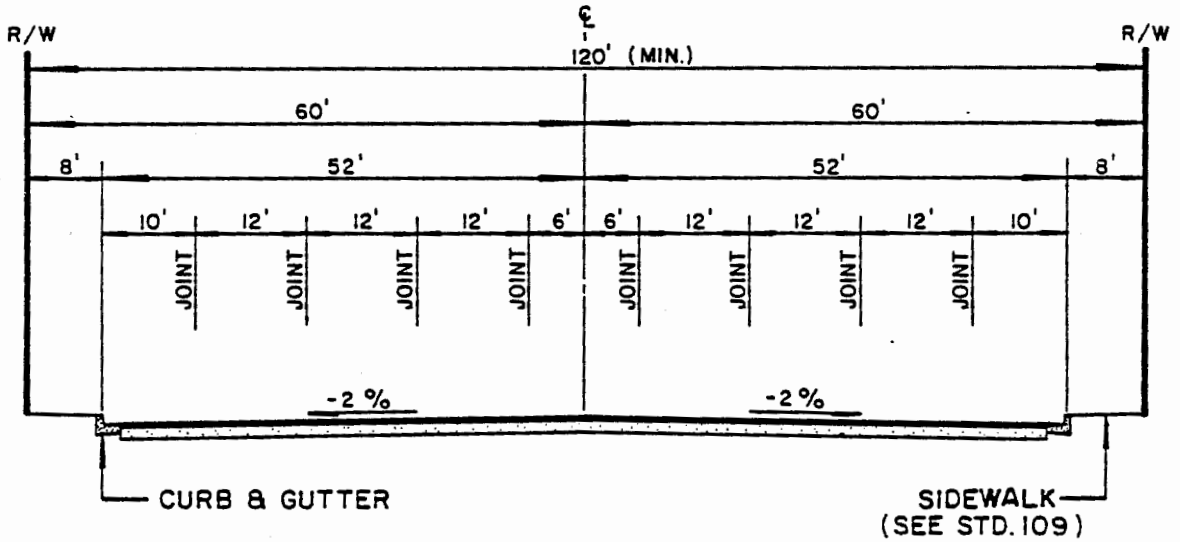

TYPICAL SECTION

WITH CONTINUOUS LEFT TURN LANE

NOTES:

1. STRUCTURAL SECTION OF ROADWAY SHALL BE DETERMINED FROM SOILS TESTS AND SO INDICATED ON CONSTRUCTION PLANS.
2. DRAINAGE FACILITIES SHALL BE PROVIDED TO DEWATER RAISED MEDIAN AREAS.
3. 10' SHOULDER AREAS MAY BE DESIGNATED AS A BIKE LANE AND EMERGENCY PARKING ONLY.

SAN BERNARDINO COUNTY TRANSPORTATION DEPARTMENT			
DATE: 1GO 12 '81	JOHN R. SHONE DIRECTOR OF TRANSPORTATION	MAJOR ARTERIAL	100 A

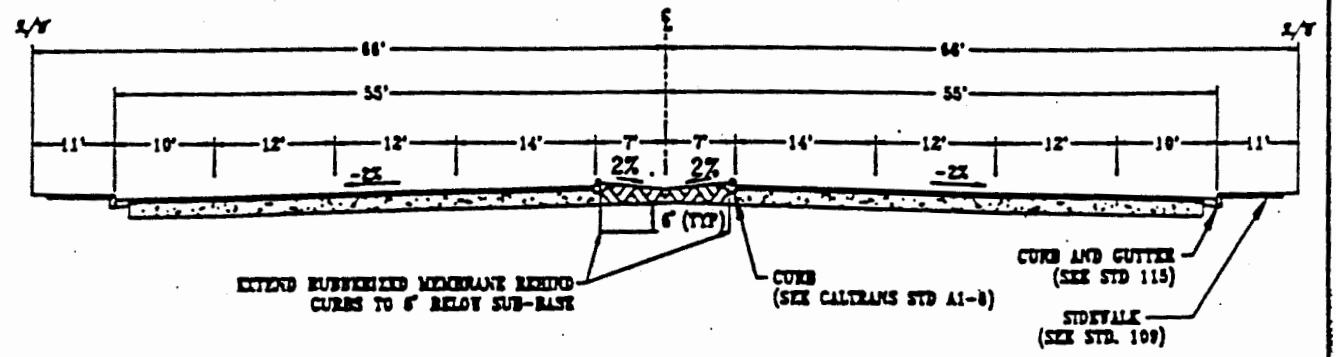

TYPICAL SECTION

WITH RAISED MEDIAN

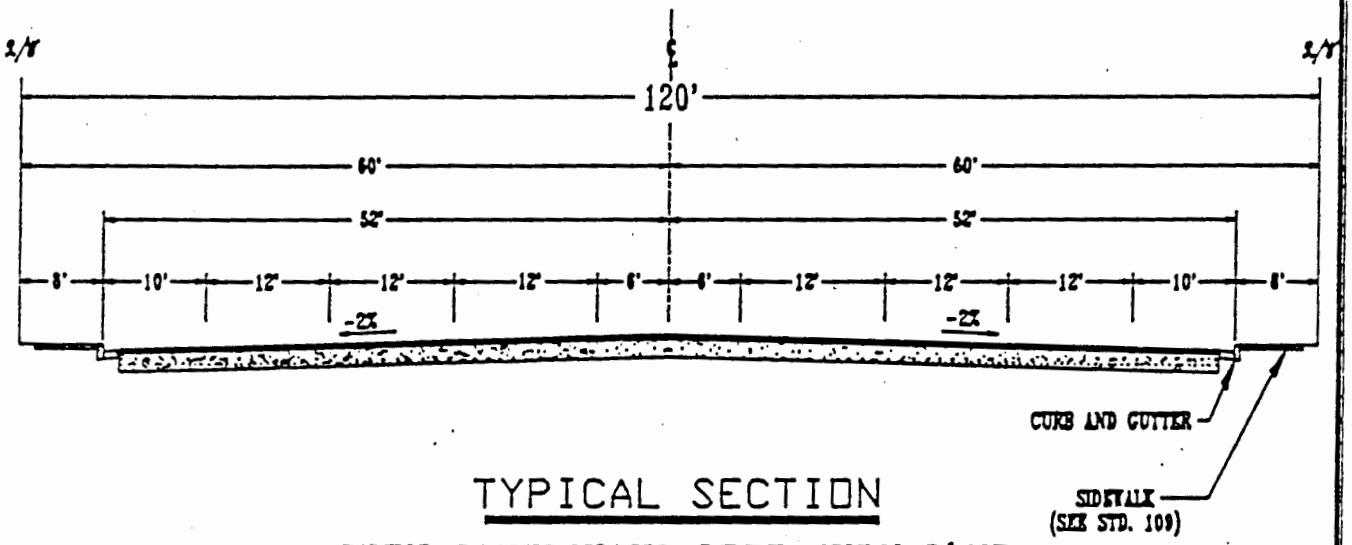

TYPICAL SECTION

WITH CONTINUOUS LEFT TURN LANE

NOTES:

1. STRUCTURAL SECTION OF ROADWAY SHALL BE DETERMINED FROM SOILS TESTS AND SO INDICATED ON CONSTRUCTION PLANS.
2. DRAINAGE FACILITIES SHALL BE PROVIDED TO DEWATER RAISED MEDIAN AREAS.
3. TEN FEET (10') SHOULDER AREAS MAY BE DESIGNATED AS A BIKE LANE AND EMERGENCY PARKING ONLY.
4. IRRIGATION SYSTEM IN MEDIAN AREA SHALL BE DRIP OR BUBBLE SYSTEM.

SAN BERNARDINO COUNTY ROAD DEPARTMENT		**MAJOR ARTERIAL**	**100B**
	KEN MILLER DIRECTOR OF TRANSPORTATION	**CHINO HILLS SPECIFIC PLAN AREA**	

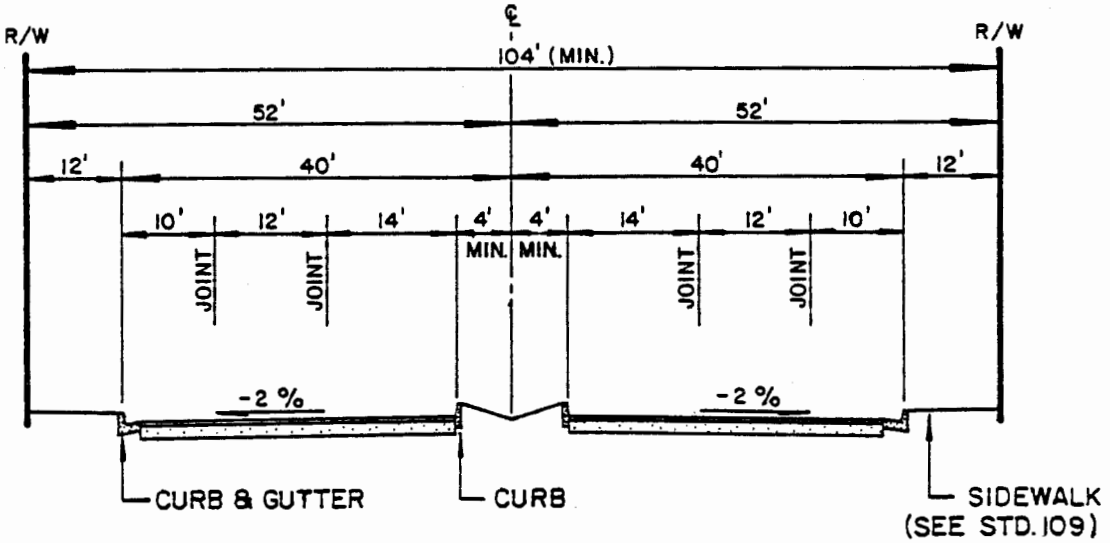

TYPICAL SECTION

WITH RAISED MEDIAN

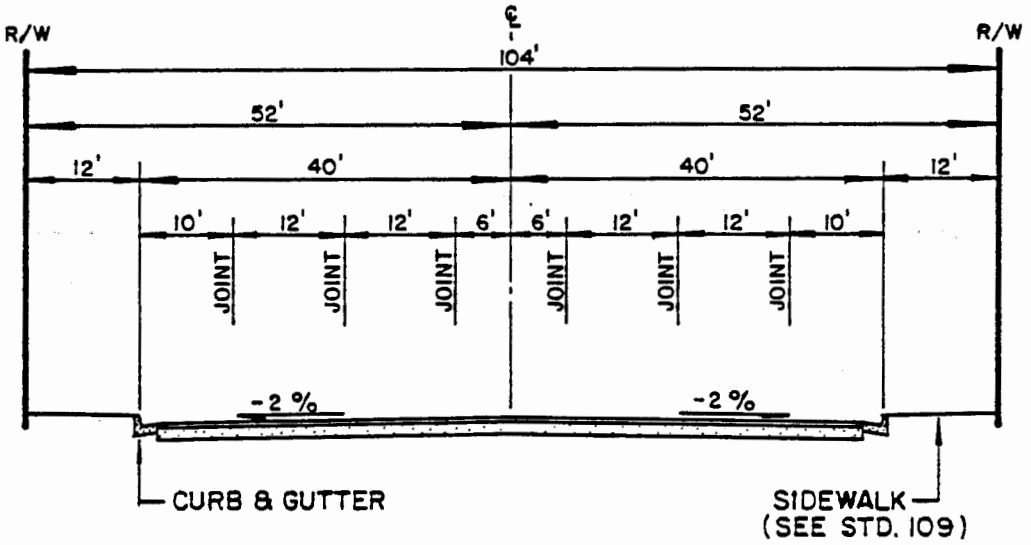

TYPICAL SECTION

WITH CONTINUOUS LEFT TURN LANE

NOTES:

1. STRUCTURAL SECTION OF ROADWAY SHALL BE DETERMINED FROM SOILS TESTS AND SO INDICATED ON CONSTRUCTION PLANS.
2. DRAINAGE FACILITIES SHALL BE PROVIDED TO DEWATER RAISED MEDIAN AREAS.
3. 10' SHOULDER AREAS MAY BE DESIGNATED AS A BIKE LANE AND EMERGENCY PARKING ONLY.

SAN BERNARDINO COUNTY TRANSPORTATION DEPARTMENT			
DATE: IGO 12 '81	JOHN R. SHONE DIRECTOR OF TRANSPORTATION	MAJOR HIGHWAY	101

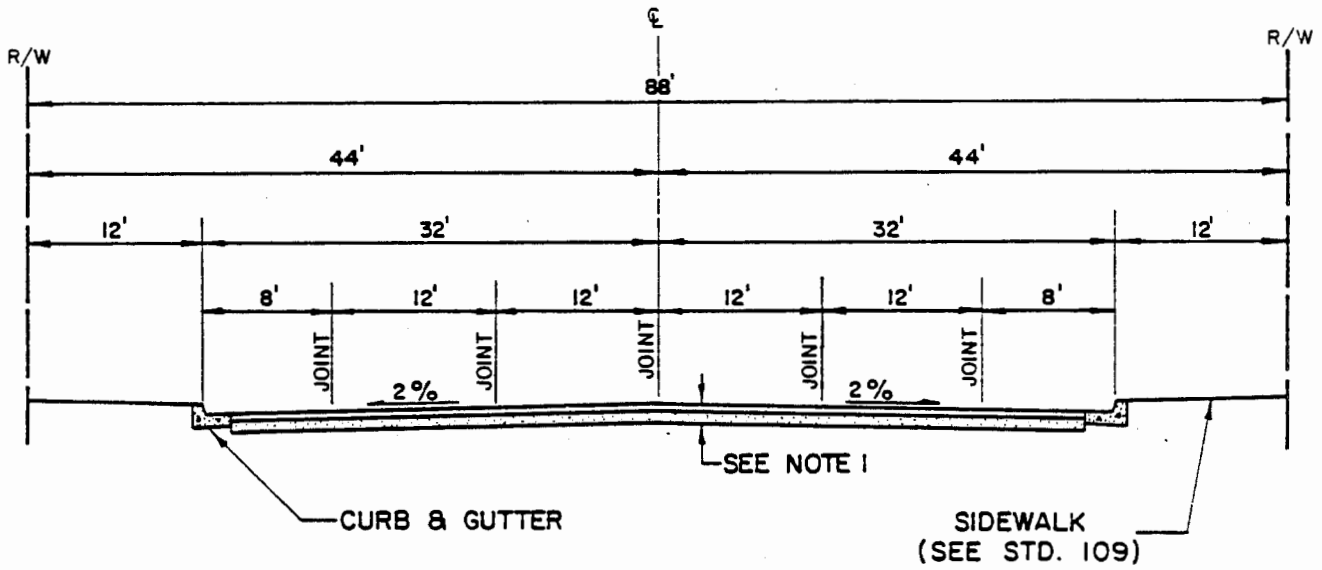

TYPICAL SECTION

NOTES:

1. STRUCTURAL SECTION OF ROADWAY SHALL BE DETERMINED FROM SOILS TESTS AND SO INDICATED ON CONSTRUCTION PLANS.
2. 8' SHOULDER AREAS MAY BE DESIGNATED AS A BIKE LANE AND EMERGENCY PARKING ONLY.

SAN BERNARDINO COUNTY TRANSPORTATION DEPARTMENT			
DATE: V.R.K. 4 '77 A.D.I. 12 '81	JOHN R. SHONE DIRECTOR OF TRANSPORTATION	SECONDARY HIGHWAY	102

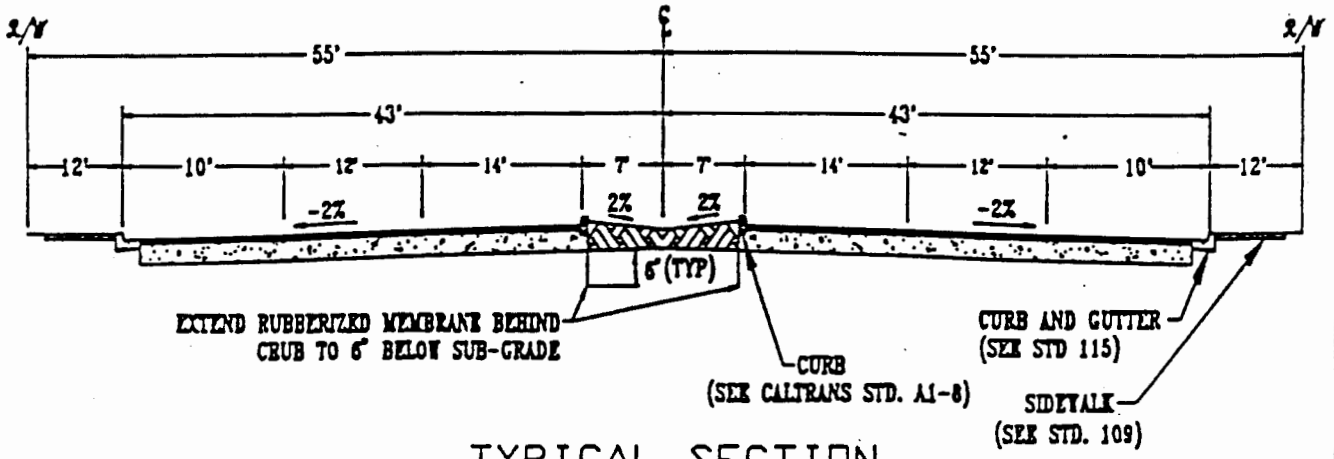

TYPICAL SECTION

WITH RAISED MEDIAN

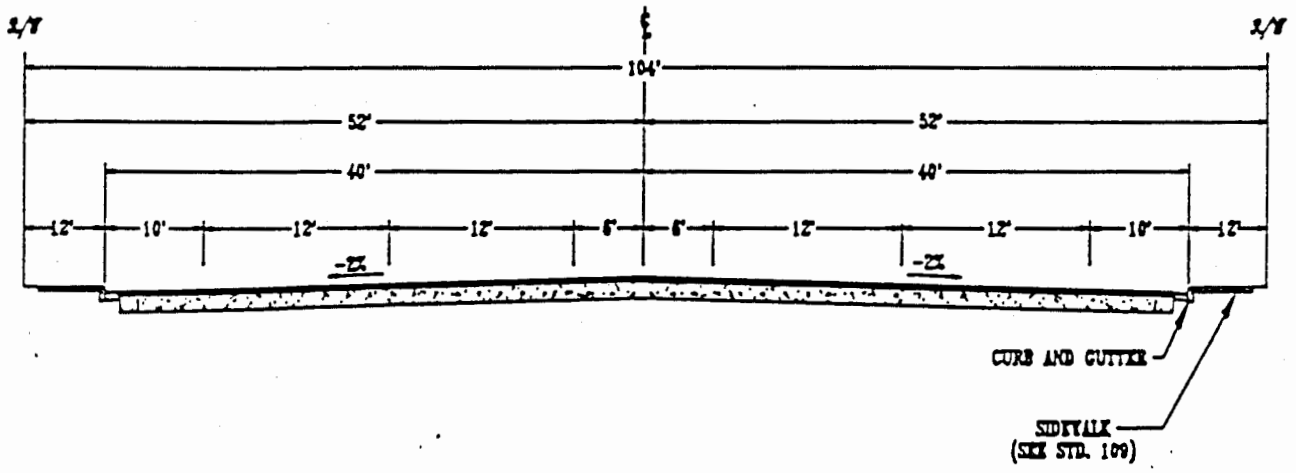

TYPICAL SECTION

WITH CONTINUOUS LEFT TURN LANE

NOTES:

1. STRUCTURAL SECTION OF ROADWAY SHALL BE DETERMINED FROM SOILS TESTS AND SO INDICATED ON CONSTRUCTION PLANS.
2. DRAINAGE FACILITIES SHALL BE PROVIDED TO DEWATER RAISED MEDIAN AREAS.
3. TEN FEET (10') SHOULDER AREAS MAY BE DESIGNATED AS A BIKE LANE AND EMERGENCY PARKING ONLY.
4. IRRIGATION SYSTEM IN MEDIAN AREA SHALL BE DRIP OR BUBBLE SYSTEM.

SAN BERNARDINO COUNTY ROAD DEPARTMENT		**MAJOR HIGHWAY**	**102A**
	KEN MILLER DIRECTOR OF TRANSPORTATION	**CHINO HILLS SPECIFIC PLAN AREA**	

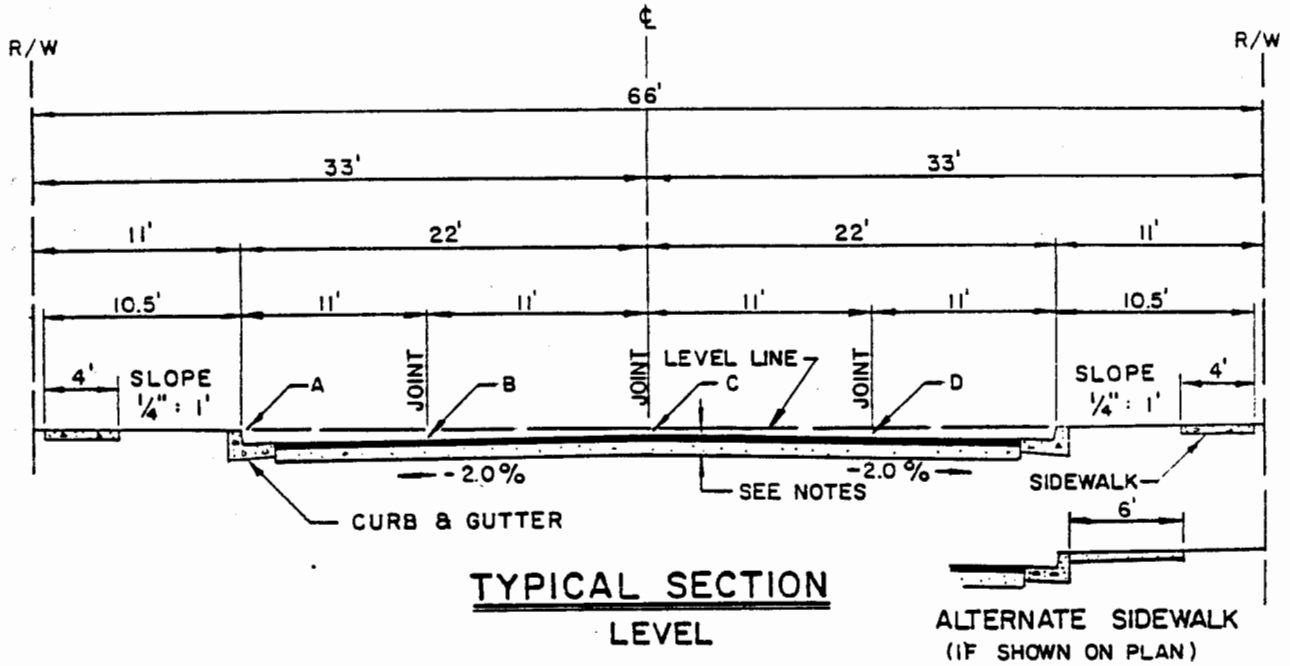

TYPICAL SECTION
LEVEL

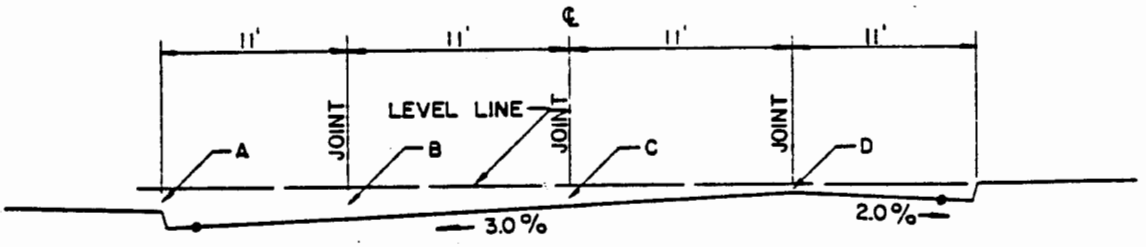

TYPICAL SECTION
TILT

		A	B	C	D
8" CURB	LEVEL	0.00'	0.36'	0.14'	0.36'
	TILT	0.76'	1.02'	0.69'	0.36'
6" CURB	LEVEL	0.00'	0.19'	(0.03')	0.19'
	TILT	0.76'	0.85'	0.52'	0.19'

( ) INDICATES ABOVE LEVEL LINE

NOTE

1. STRUCTURAL SECTION OF ROADWAY SHALL BE DETERMINED FROM SOILS TESTS AND SO INDICATED ON CONSTRUCTION PLANS.
2. MINIMUM DESIGN PAVING THICKNESS SHALL BE 0.20' ASPHALT CONCRETE.
3. CONSTRUCTION OUTSIDE R/W WILL REQUIRE SLOPE EASEMENTS.

SAN BERNARDINO COUNTY ROAD DEPARTMENT			
DATE: J.V.C. 9-65 Rev. 5-74	John R. Shone COUNTY HIGHWAY ENGINEER	COLLECTOR STREET	103

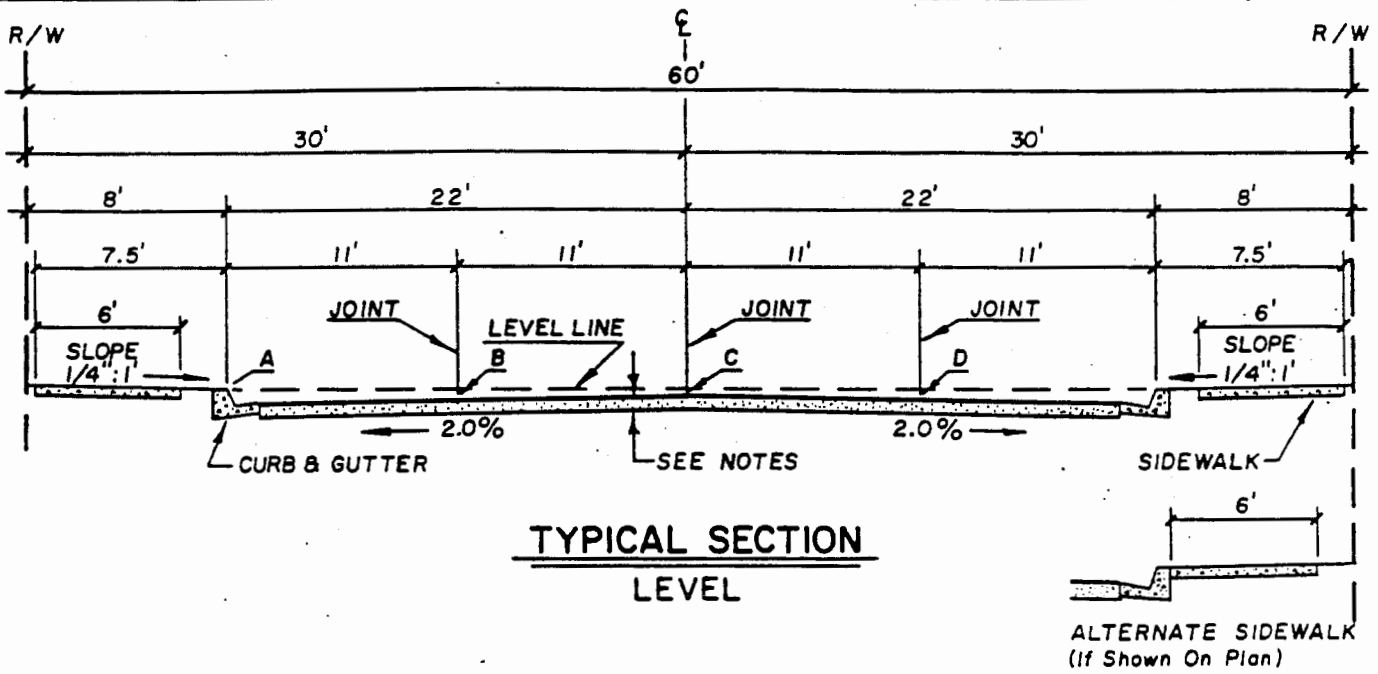

TYPICAL SECTION
LEVEL

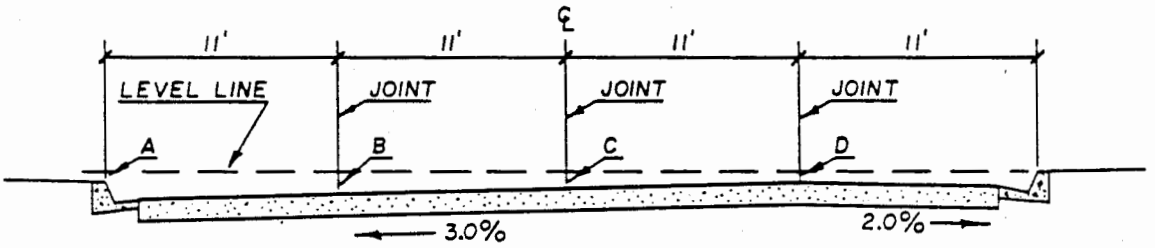

TYPICAL SECTION
TILT

JOINT ELEVATIONS		A	B	C	D
8" CURB	LEVEL	0.00'	0.36'	0.14'	0.36'
	TILT	0.76'	1.02'	0.69'	0.36'
6" CURB	LEVEL	0.00'	0.19'	(0.03')	0.19'
	TILT	0.76'	0.85'	0.52'	0.19'

( ) Indicates Above Level Line.

NOTES:

1. Structural Section Of Roadway Shall Be Determined From Soils Test, Traffic Index, Article IX Of The San Bernardino County Road Planning And Design Standards And Shall Be Approved By The County Transportation Department And So Indicated On Construction Plans.
2. Construction Outside R/W Will Require Slope Easements.

4-13-93 vhc

SAN BERNARDINO COUNTY TRANS. DEPT.		INDUSTRIAL COLLECTOR	103b
REV. 3/1/94	KEN A. MILLER Director of Transportation		

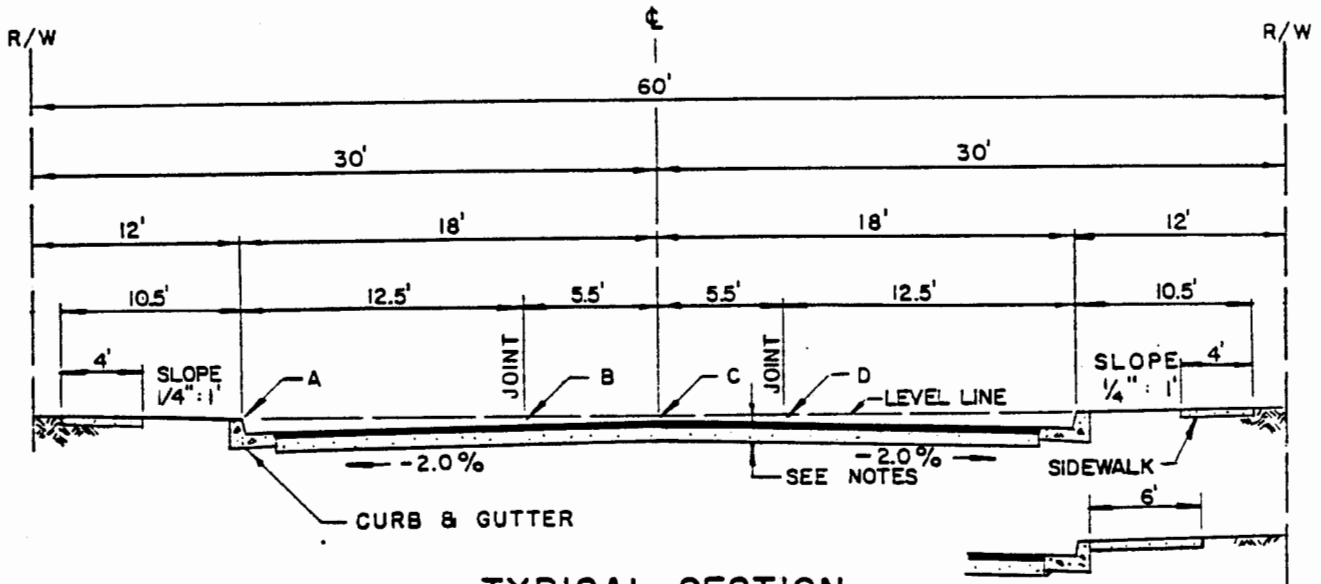

TYPICAL SECTION
LEVEL

ALTERNATE SIDEWALK
(IF SHOWN ON PLAN)

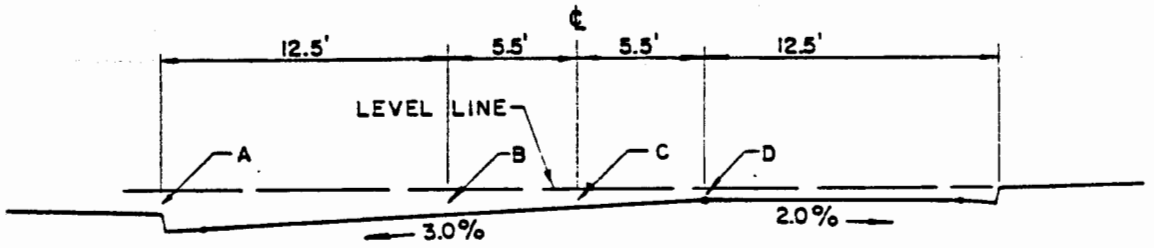

TYPICAL SECTION
TILT

		A	B	C	D
8" CURB	LEVEL	0.00'	0.33'	0.22'	0.33'
	TILT	0.44'	0.66'	0.50'	0.33'
6" CURB	LEVEL	0.00	0.16'	0.05'	0.16'
	TILT	0.44'	0.49'	0.33'	0.16'

NOTE

1. STRUCTURAL SECTION OF ROADWAY SHALL BE DETERMINED FROM SOILS TESTS AND SO INDICATED ON CONSTRUCTION PLANS.
2. MINIMUM DESIGN PAVING THICKNESS SHALL BE 0.20' ASPHALT CONCRETE.
3. CONSTRUCTION OUTSIDE R/W WILL REQUIRE SLOPE EASEMENTS
4. WHEN PREPARING SUBGRADE FOR PAVING, CENTERLINE CROWN ON THE "LEVEL SECTION" SHALL BE RELOCATED EITHER LEFT OR RIGHT 0.50' TO MATCH CROWN BREAK IN PAVING MACHINE.

SAN BERNARDINO COUNTY ROAD DEPARTMENT			
DATE: F.V.C. 9-65 Rev. 5-74	John R. Shone COUNTY HIGHWAY ENGINEER	LOCAL STREET	104

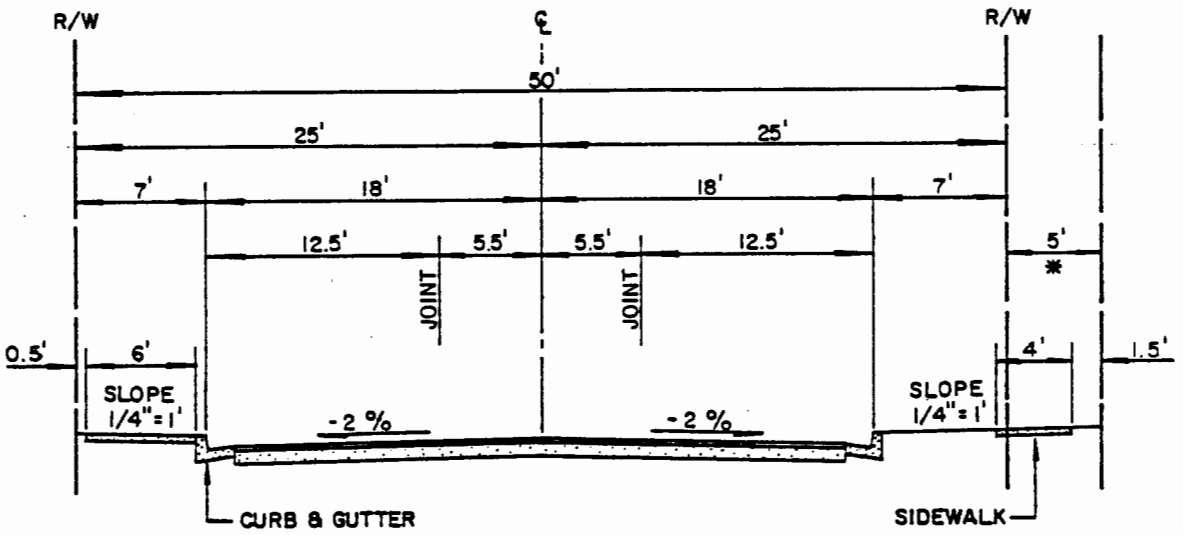

TYPICAL SECTION

NOTES:

1. THIS TYPICAL SECTION SHALL BE USED ONLY ON LOCAL STREETS SUCH AS CUL-DE-SACS, LOOPS AND STREETS THAT DO NOT CARRY THROUGH TYPE TRAFFIC. THE USE SHALL BE LIMITED TO STREETS WHICH ARE PROJECTED TO CARRY LESS THAN 1000 ADT UPON ULTIMATE DEVELOPMENT OF THE AREA.
2. STRUCTURAL SECTION OF ROADWAY SHALL BE DETERMINED FROM SOIL TESTS AND SO INDICATED ON CONSTRUCTION PLANS.
3. CONSTRUCTION OUTSIDE R/W LINE SHALL REQUIRE SLOPE EASEMENTS.
4. TILT SECTION SHALL CONFORM TO LOCAL STREET STANDARD NO. 104.

*. 5' WIDE SIDEWALK AND PUBLIC UTILITIES EASEMENT AT THE OPTION OF THE OWNER, THIS AREA MAY BE DEDICATED AS ROAD RIGHT-OF-WAY.

SAN BERNARDINO COUNTY TRANSPORTATION DEPARTMENT		LOCAL STREET	104 A
DATE: 160 12 '81	JOHN R. SHONE DIRECTOR OF TRANSPORTATION	(LESS THAN 1000 ADT)	

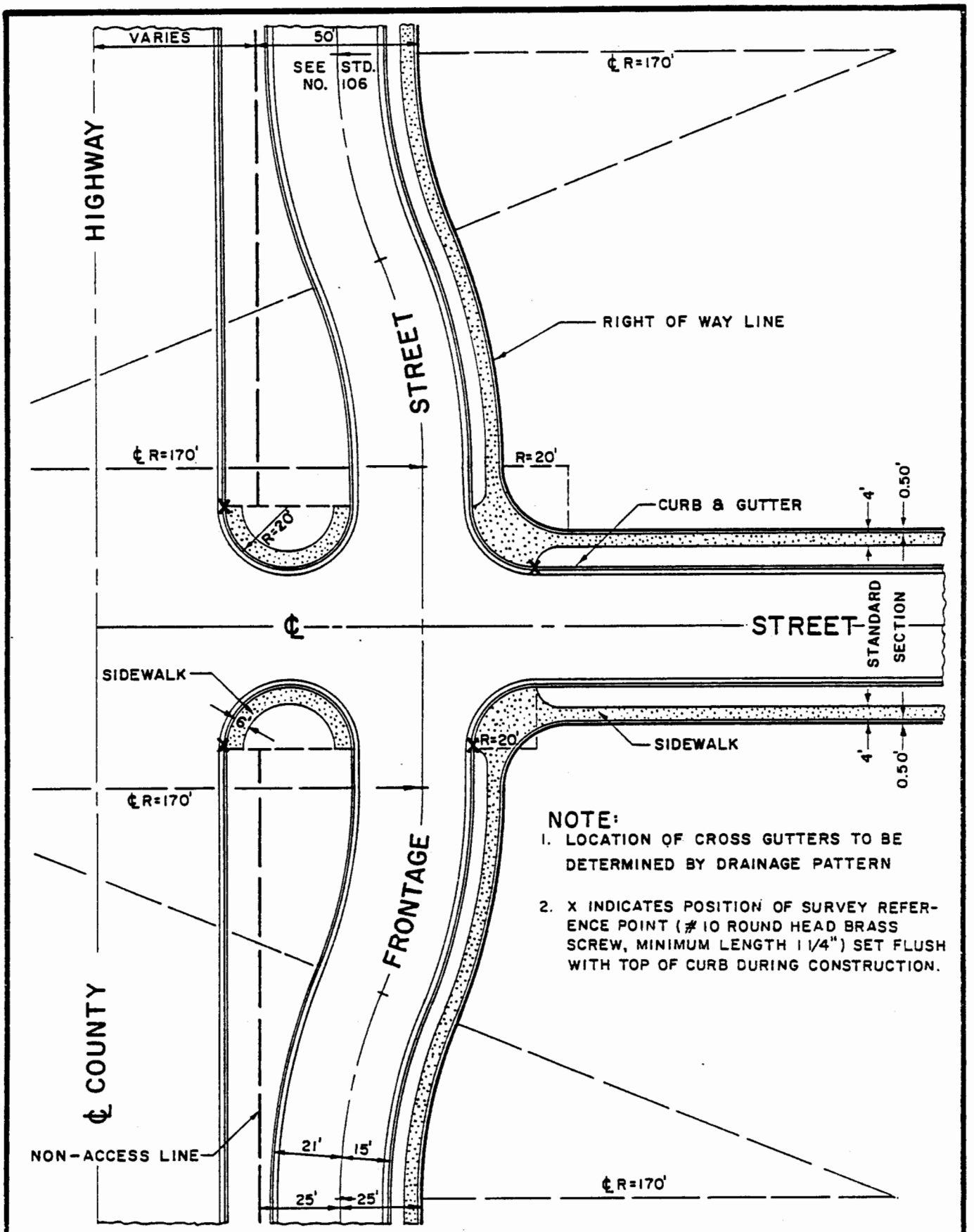

NOTE:

1. LOCATION OF CROSS GUTTERS TO BE DETERMINED BY DRAINAGE PATTERN
2. X INDICATES POSITION OF SURVEY REFERENCE POINT (# 10 ROUND HEAD BRASS SCREW, MINIMUM LENGTH 1 1/4") SET FLUSH WITH TOP OF CURB DURING CONSTRUCTION.

SAN BERNARDINO COUNTY ROAD DEPARTMENT DATE: F.V.C. 6-65 REV. V.E.H. 2-79	*M. A. Nicholas* COUNTY ENGINEER	INTERSECTION DESIGN FRONTAGE STREET	105

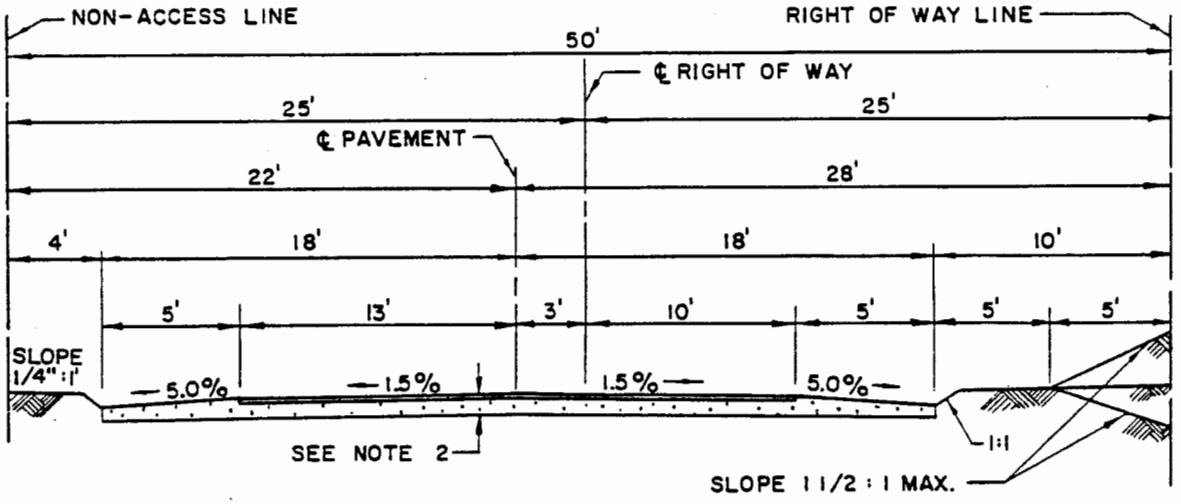

TYPICAL SECTION - FRONTAGE ROAD

DESERT, RESIDENTIAL, LOW DENSITY

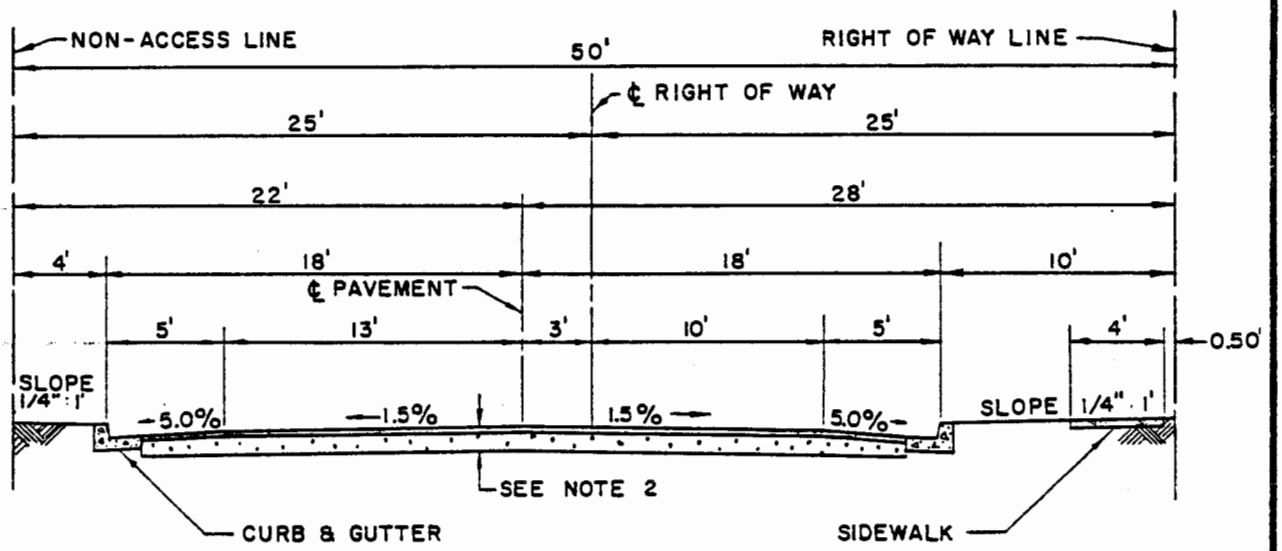

TYPICAL SECTION - FRONTAGE STREET

RESIDENTIAL, COMMERCIAL, INDUSTRIAL

NOTES:

1. CONSTRUCTION OUTSIDE R/W LINE SHALL REQUIRE SLOPE EASEMENTS.
2. STRUCTURAL SECTION OF ROADWAY SHALL BE DETERMINED FROM SOILS TESTS AND SO INDICATED ON CONSTRUCTION PLANS.
3. TILT SECTIONS TO CONFORM TO LOCAL STREET SECTION, STD. NO. 104 OR TILT SECTION OF STD. NO. 100.

SAN BERNARDINO COUNTY ROAD DEPARTMENT DATE: F.V.C. 4-65	*M. A. Nicholas* COUNTY ENGINEER	FRONTAGE ROAD AND STREET	106

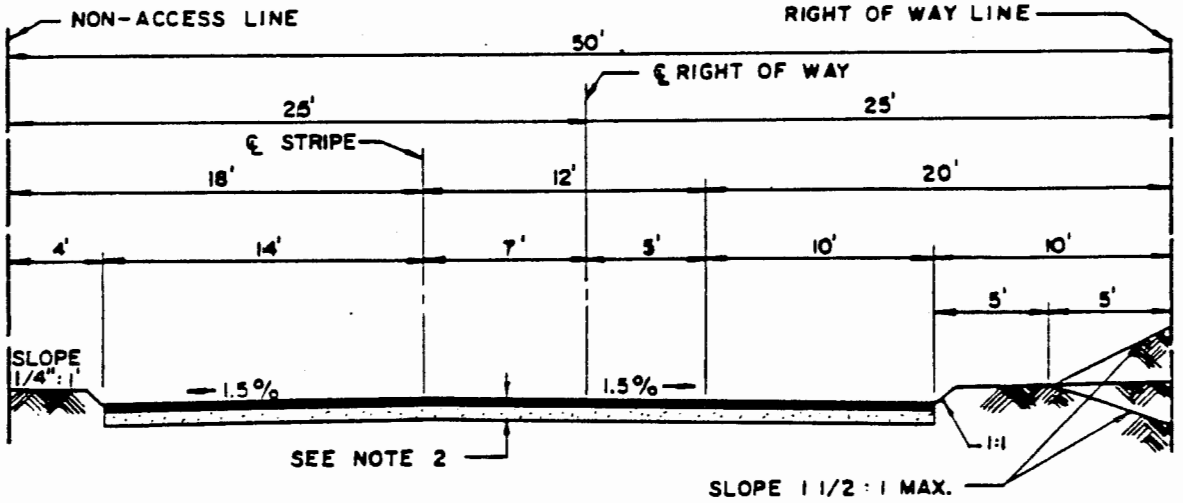

TYPICAL SECTION-FRONTAGE ROAD

DESERT, RESIDENTIAL, LOW DENSITY

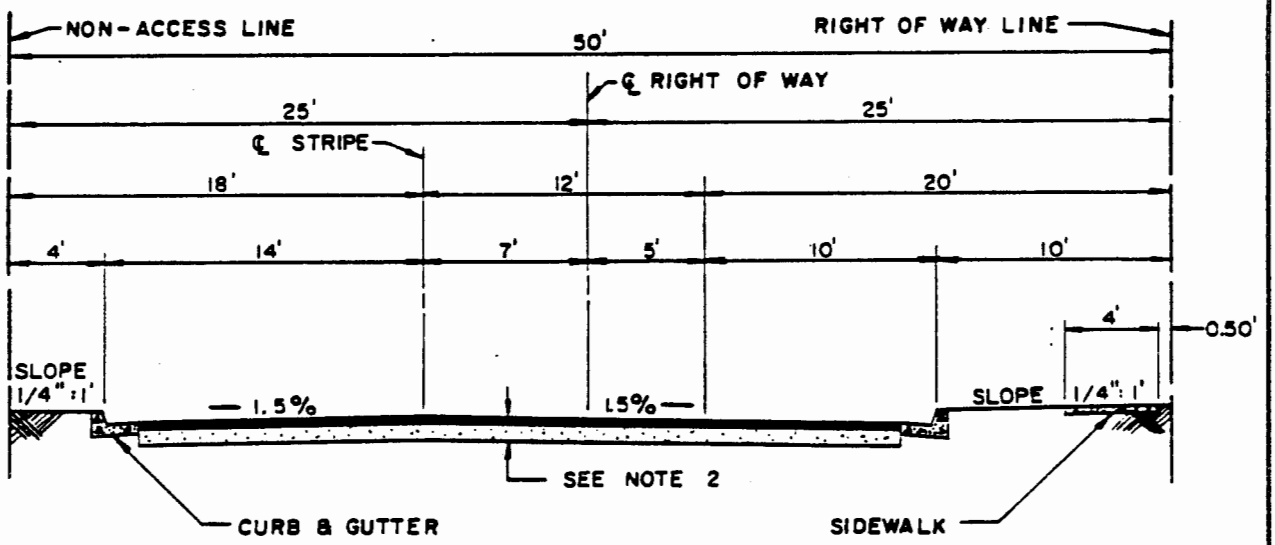

TYPICAL SECTION-FRONTAGE STREET

RESIDENTIAL, COMMERCIAL, INDUSTRIAL

NOTES:

1. CONSTRUCTION OUTSIDE R/W LINE SHALL REQUIRE SLOPE EASEMENTS.
2. STRUCTURAL SECTION OF ROADWAY SHALL BE DETERMINED FROM SOILS TESTS AND SO INDICATED ON CONSTRUCTION PLANS.
3. TILT SECTIONS TO CONFORM TO LOCAL STREET SECTION, STD. NO. 104 OR TILT SECTION OF STD. NO. 100.

SAN BERNARDINO COUNTY ROAD DEPARTMENT		FRONTAGE ROAD AND STREET	106a
DATE: 1-68	*M. A. Nicholas* COUNTY ENGINEER		

FULL WIDTH CONSTRUCTION

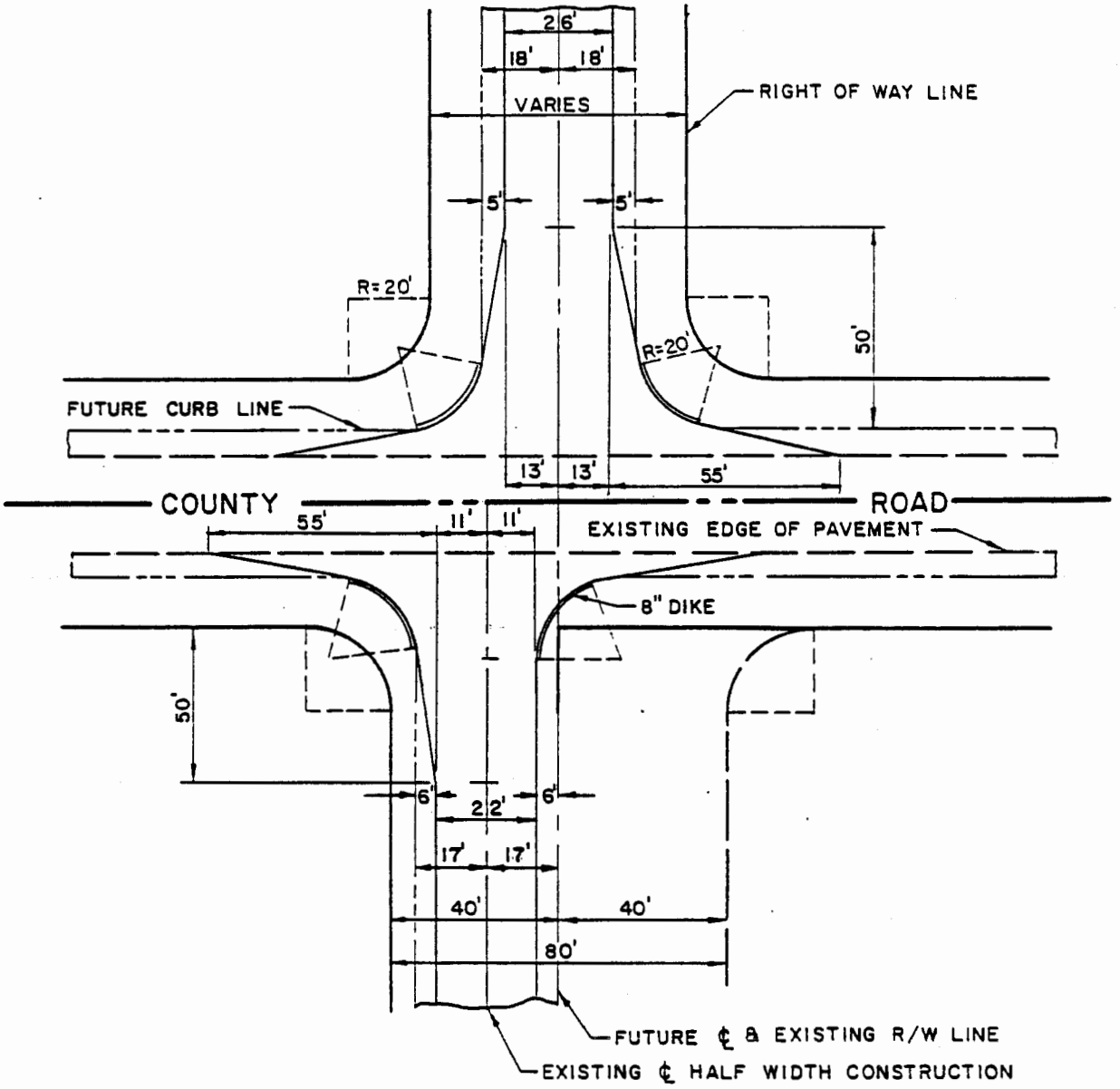

HALF WIDTH CONSTRUCTION

NOTES:

1. SEE STANDARD NO. 112 FOR ROADWAY SECTIONS.

SAN BERNARDINO COUNTY ROAD DEPARTMENT		INTERSECTION DESIGN DESERT ROAD	107
DATE: R.V.C. 4-65	*M. A. Nicholas* COUNTY ENGINEER		

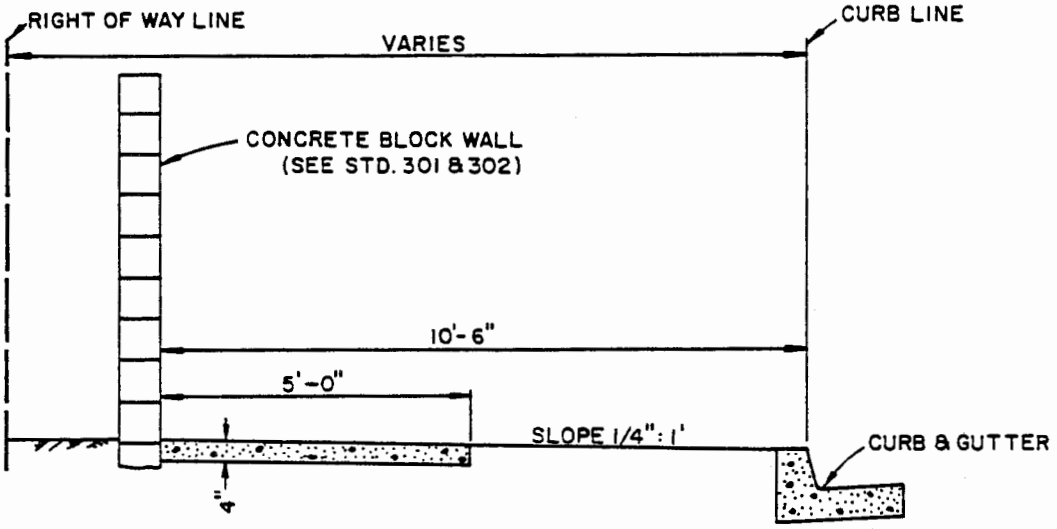

TYPE "A"

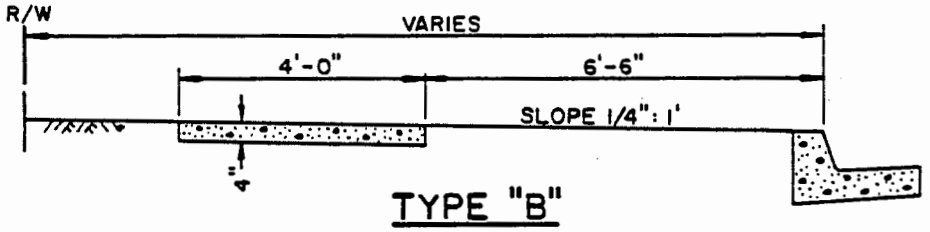

TYPE "B"

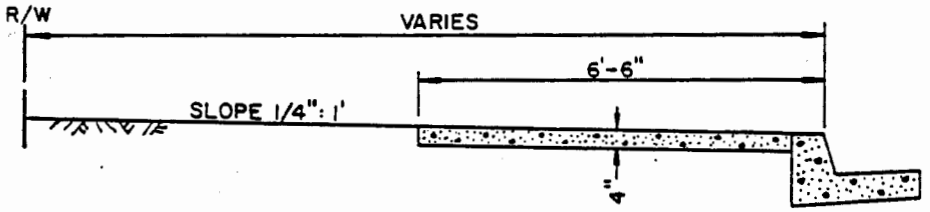

TYPE "C"

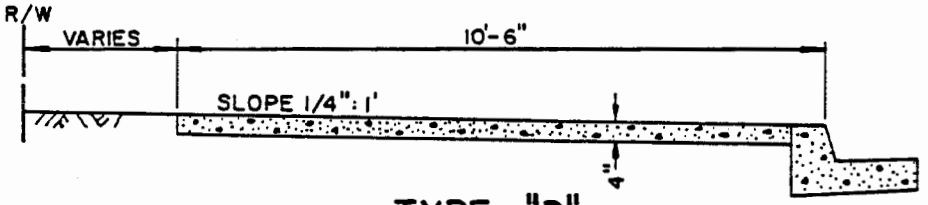

TYPE "D"

1. TYPE "C" SIDEWALKS ADJACENT TO CURB SHALL ONLY BE USED ON LOCAL AND COLLECTOR STREETS AND ONLY UPON APPROVAL OF THE TRANSPORTATION DEPT.
2. SIDEWALK SHALL BE CONSTRUCTED OF CLASS "B" CONCRETE.
3. WEAKENED PLANE JOINTS SHALL BE CONSTRUCTED ON 10' SPACING.
4. SCORING SIDEWALK WILL BE PERMITTED.
5. IN EXPANSIVE SOIL AREAS, REFER TO SECTION 73 OF THE COUNTY SPECIFICATIONS.

San Bernardino County Transportation Department			
APP. MAR. 1975	John R. Shone DIRECTOR OF TRANSPORTATION	SIDEWALK	109

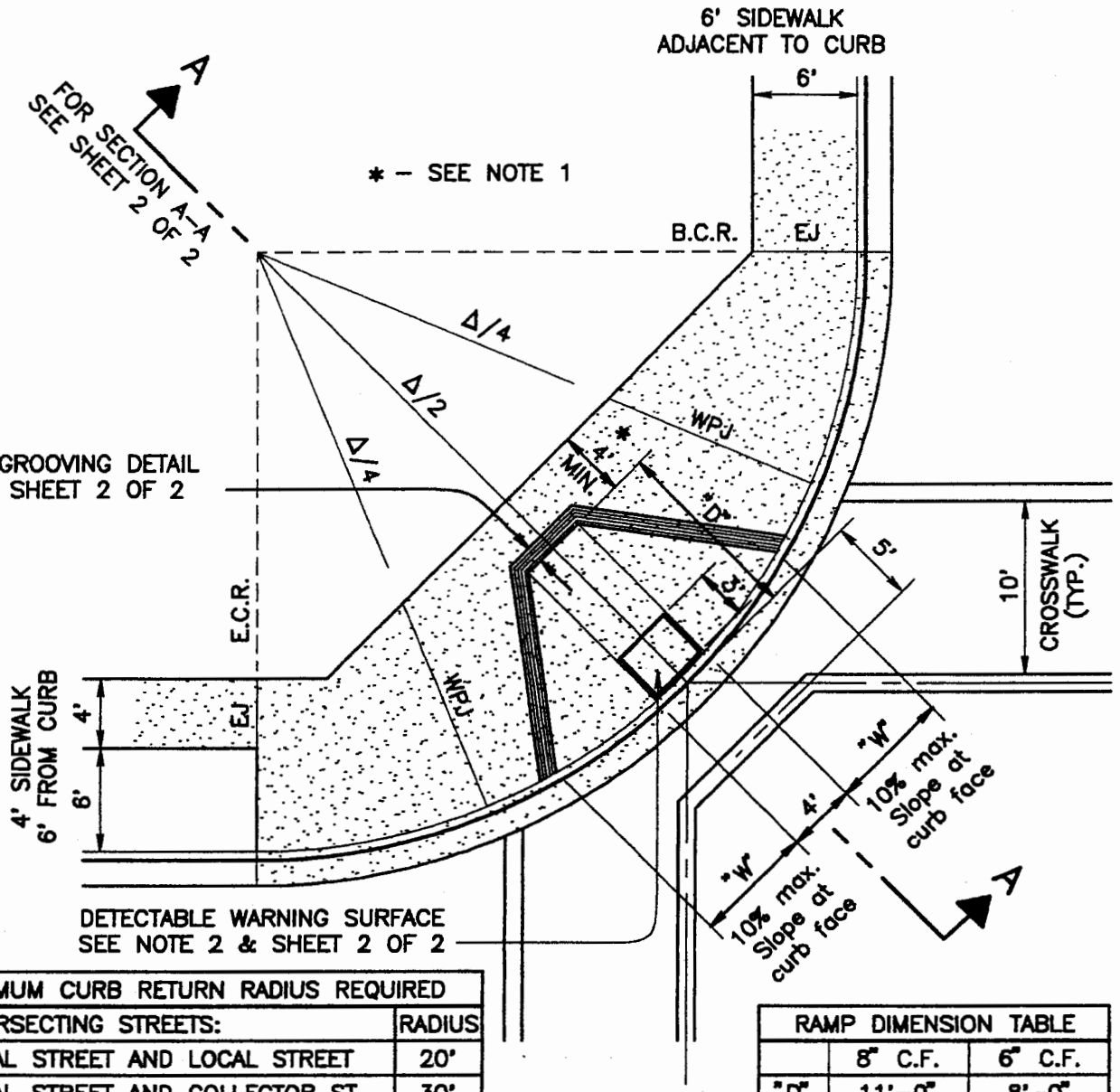

MINIMUM CURB RETURN RADIUS REQUIRED		
INTERSECTING STREETS:	RADIUS	
LOCAL STREET AND LOCAL STREET	20'	
LOCAL STREET AND COLLECTOR ST.	30'	
SECONDARY HWY. OR GREATER	35'	< (RESIDENTIAL)
SECONDARY HWY. OR GREATER	50'	< (COMMERCIAL/ INDUSTRIAL)

RAMP DIMENSION TABLE		
	8" C.F.	6" C.F.
"D"	11'-0"	8'-0"
"W"	7'-0"	5'-0"
C.F. = CURB FACE		

NOTES:

1. SIDEWALK WIDTH SHALL BE 5' WHEN ADJACENT TO BLOCK WALL OR OTHER OBSTRUCTION. FOR BLOCK WALL LOCATION AT INTERSECTION SEE COUNTY STD. 302.
2. THE DETECTABLE WARNING SURFACE SHALL BE CONSTRUCTED BY CAST-IN-PLACE METHOD OR SHALL CONSIST OF A PREFABRICATED SURFACE, APPROVED BY THE COUNTY ENGINEER. A GLUE DOWN DETECTABLE WARNING SURFACE IS NOT ALLOWED.
3. FOR RIGHT-OF-WAY LOCATION SEE PROJECT PLANS.

WPJ INDICATES WEAKENED PLANE JOINT

EJ INDICATES 1/4" PREMOLDED EXPANSION JOINT FILLER PER ASTM DESIGNATION D 1751.

SEE TERRAMODEL FILE – N:\ M2201\ MISCDET.pro

CO. OF SAN BDNO. DEPT. OF PUBLIC WORKS			
REVISED: DATE G.M. 12-05 G.M. 3-06	PATRICK J. MEAD Director of Public Works	CURB RETURN WITH SIDEWALK RAMP	110 1 OF 2

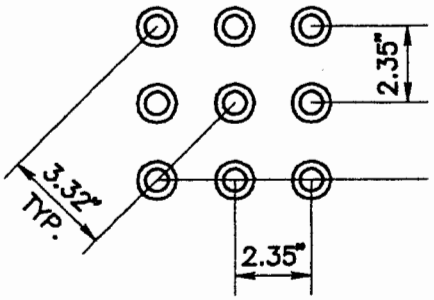

TRUNCATED DOME PATTERN

DETECTABLE WARNING SURFACE

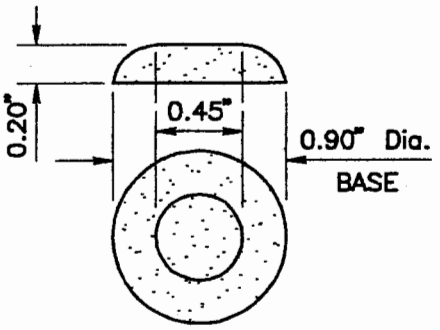

TRUNCATED DOME DETAIL

RAISED TRUNCATED DOME

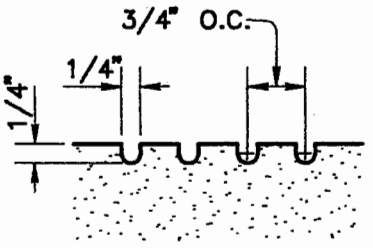

GROOVING DETAIL

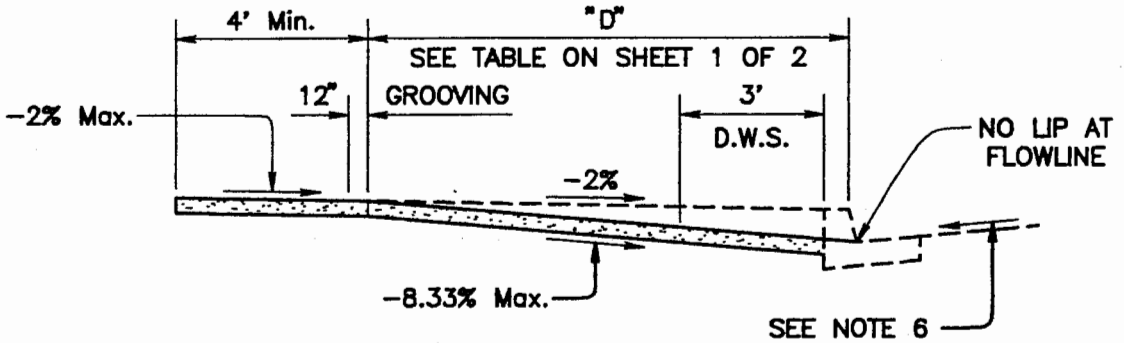

SECTION A–A

NOTES:

1. THE SIDEWALK AND RAMP THICKNESS SHALL BE 4" MINIMUM.
2. THE SIDEWALK RAMP SLOPE SHALL BE 8.33% MAXIMUM.
3. THE RAMP SHALL HAVE A 12" WIDE BORDER WITH 1/4" GROOVES AT 3/4" O.C. PER GROOVING DETAIL ON THIS DRAWING.
4. THE RAMP SHALL HAVE A TRANSVERSE BROOM FINISH TEXTURE ROUGHER THAN THE SURROUNDING SIDEWALK.
5. TRANSITIONS FROM RAMPS TO WALKS, GUTTERS OR STREETS SHALL BE FLUSH AND FREE OF ADRUPT CHANGES.
6. THE MAXIMUM SLOPE OF THE ROAD SURFACE IMMEDIATELY ADJACENT TO THE CURB RAMP SHALL NOT EXCEED 5 PERCENT WITHIN 4' OF THE RAMP.
7. THE EDGE OF THE DETECTABLE WARNING SURFACE NEAREST THE STREET SHALL BE BETWEEN 5" AND 8" FROM THE GUTTER FLOWLINE.
8. MODIFICATIONS TO LOCATION OR DIMENSIONS OF RAMP SHALL REQUIRE APPROVAL OF COUNTY ENGINEER AND SHALL BE SHOWN ON APPROVED PLANS.
9. UTILITY PULL BOXES, MANHOLES, VAULTS AND ALL OTHER UTILITY FACILITIES WITHIN THE BOUNDARIES OF THE CURB RAMP WILL BE RELOCATED OR ADJUSTED TO GRADE BY THE OWNER PRIOR TO, OR IN CONJUNCTION WITH, CURB RAMP CONSTRUCTION.

D.W.S. – DETECTABLE WARNING SURFACE

SEE TERRAMODEL FILE – N:\ M2201\ MISCDET.pro

CO. OF SAN BDNO. DEPT. OF PUBLIC WORKS			
REVISED: DATE G.M. 12–05 G.M. 3–06	PATRICK J. MEAD Director of Public Works	SIDEWALK RAMP	110 2 OF 2

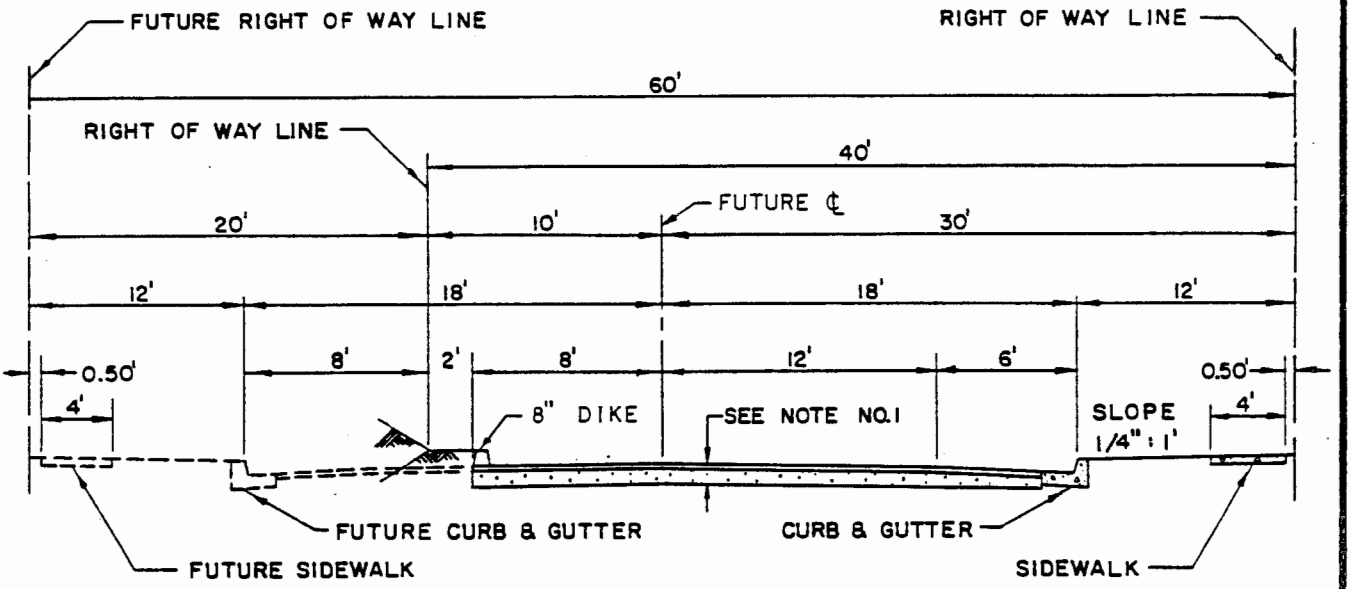

TYPICAL SECTION

NOTES

1. STRUCTURAL SECTION OF ROADWAY SHALL BE DETERMINED FROM SOILS TESTS AND SO INDICATED ON CONSTRUCTION PLANS.
2. CUT AND FILL SLOPES SHALL BE NO STEEPER THAN $1\frac{1}{2}:1$.
3. CONSTRUCTION OUTSIDE R/W LINE SHALL REQUIRE SLOPE EASEMENTS
4. ALL SECTIONS SHALL CONFORM TO STANDARD NO. 104.
5. SLOPE REQUIREMENT MAY BE VARIED BY SUBMISSION OF SOILS REPORT.

SAN BERNARDINO COUNTY ROAD DEPARTMENT			
DATE: P.V.C. 5-65	*M. A. Nicholas* COUNTY ENGINEER	HALF WIDTH LOCAL STREET	111

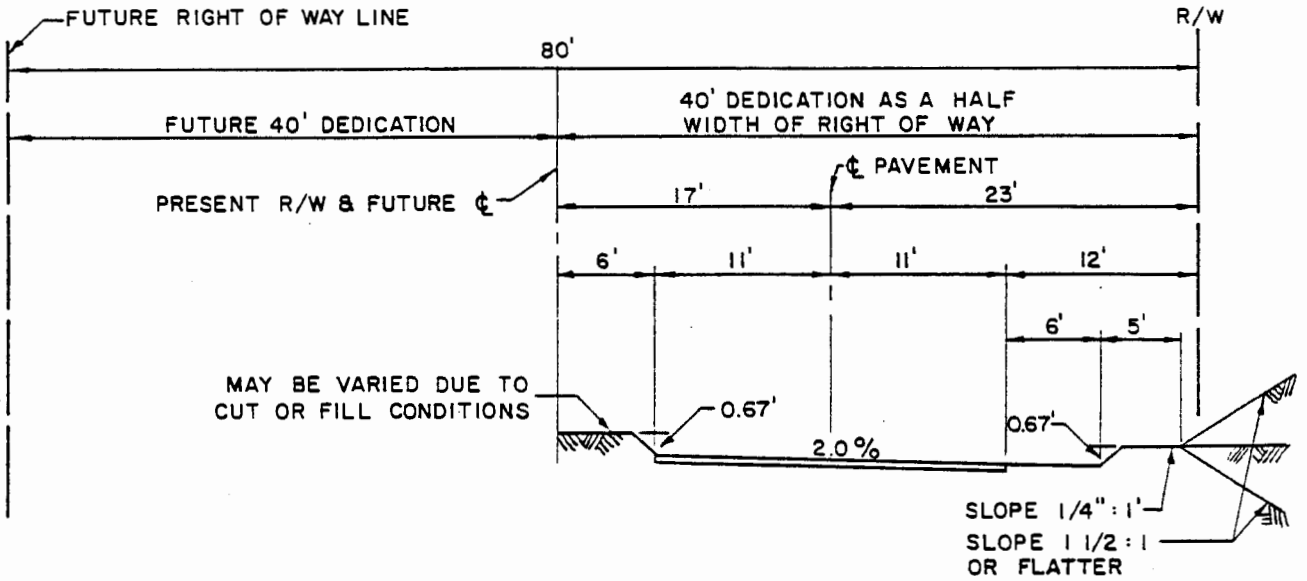

TYPICAL SECTION
HALF WIDTH CONSTRUCTION

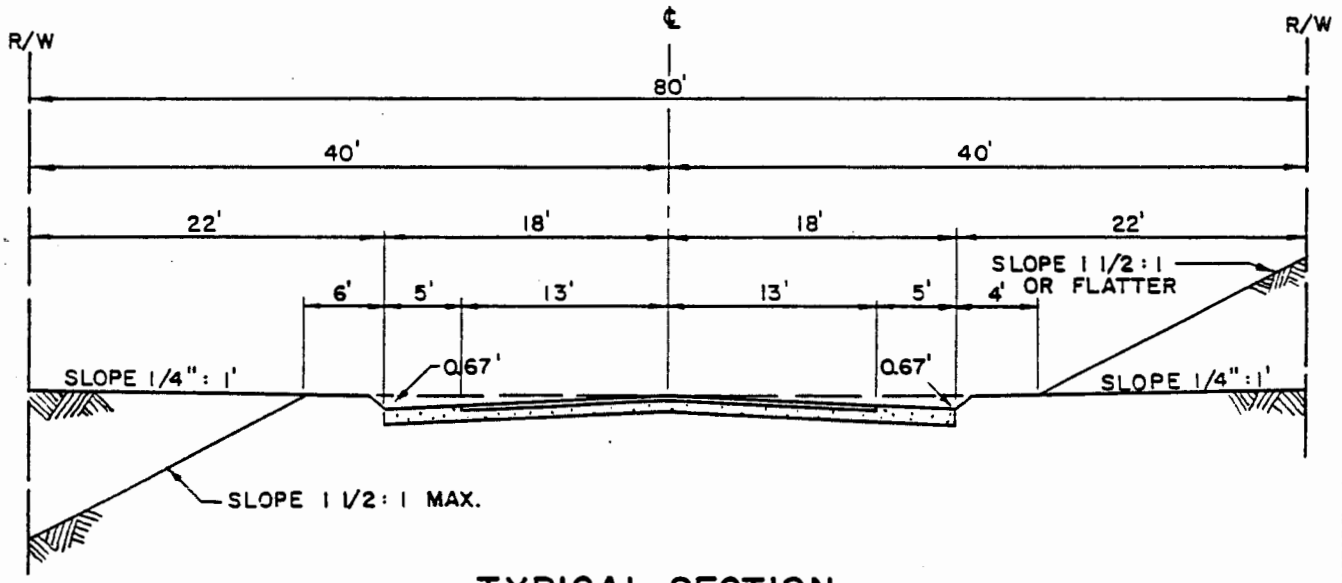

TYPICAL SECTION
ULTIMATE WIDTH

NOTES:

1. FUTURE DEVELOPER TO RECONSTRUCT PAVEMENT TO STANDARD SECTION ON CENTERLINE OF FULL WIDTH RIGHT OF WAY. ROAD TO BE PAVED OR GRADED IN ACCORDANCE WITH STANDARD NO. 113 FOR ALIGNMENT AND IMPROVEMENT, AND STANDARD NUMBER 107 FOR INTERSECTION DESIGN.
2. CONSTRUCTION OUTSIDE R/W LINE SHALL REQUIRE SLOPE EASEMENTS.

SAN BERNARDINO COUNTY ROAD DEPARTMENT			
DATE: 3.V.C.565	*M. A. Nicholas* COUNTY ENGINEER	HALF WIDTH DESERT ROAD	112

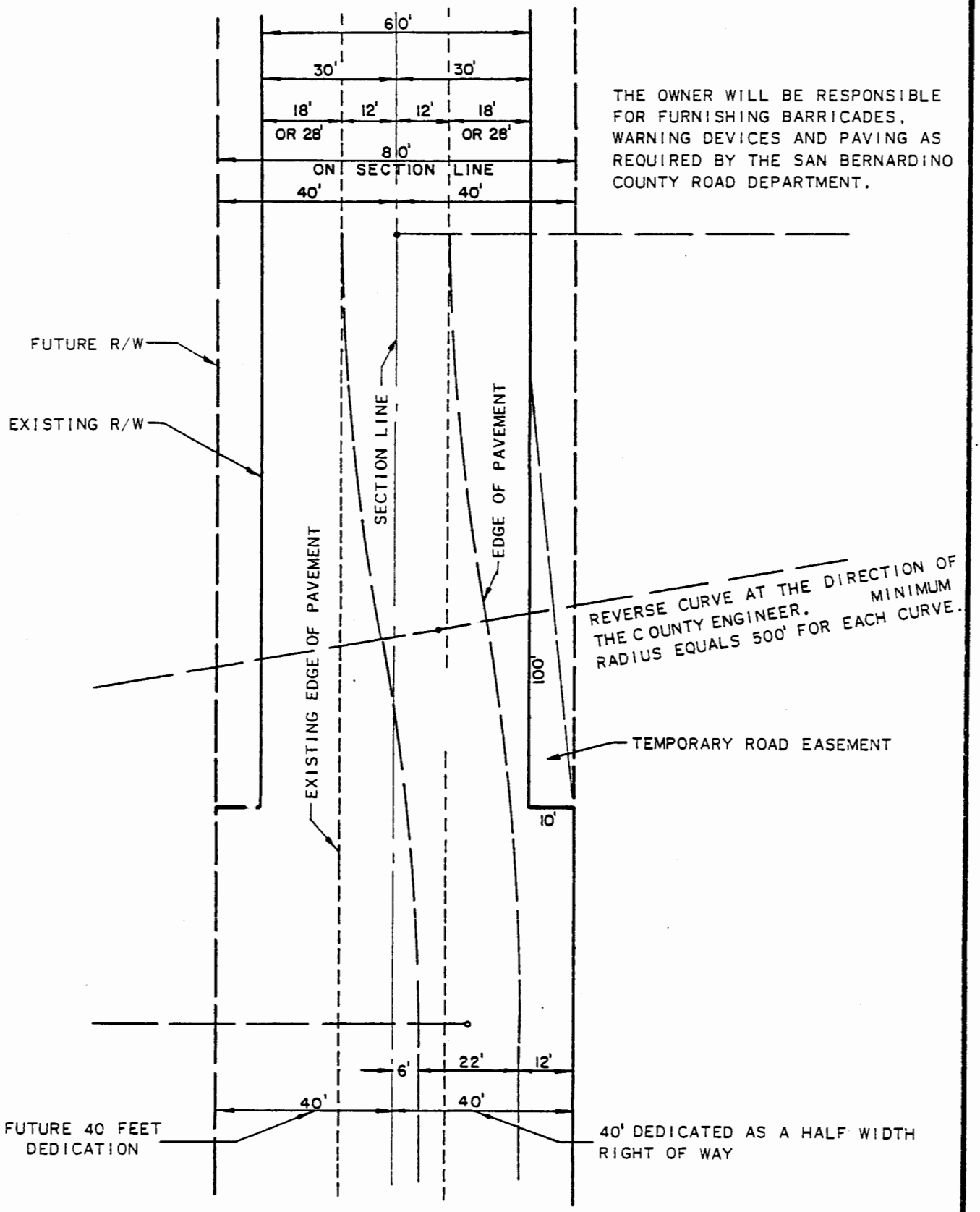

SAN BERNARDINO COUNTY ROAD DEPARTMENT		HALF WIDTH DESERT ROAD	113
DATE: 3 V.C. 5-65	*M. A. Nicholas* COUNTY ENGINEER		

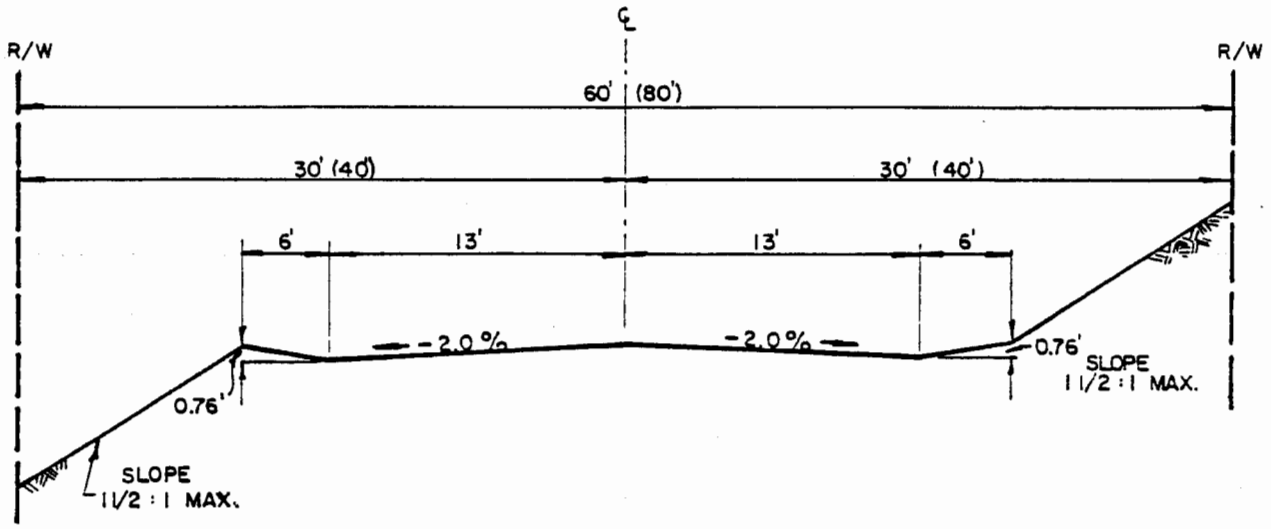

TYPICAL SECTION

NOTES:

1. DRAINAGE IMPROVEMENTS TO BE PLACED WHERE REQUIRED BY PLAN.
2. EMBANKMENTS PLACED WITHIN AREA OF THE TRAVELLED WAY SHALL PROVIDE A STABLE ROADWAY.
3. PLANS SHALL INDICATE AREAS WHERE IMPORTED MATERIAL IS REQUIRED TO PROVIDE A STABLE ROADWAY.
4. CONSTRUCTION OUTSIDE R/W LINE SHALL REQUIRE SLOPE EASEMENTS.

SAN BERNARDINO COUNTY ROAD DEPARTMENT			
Rev. 5-74	*John R. Shone* COUNTY HIGHWAY ENGINEER	GRADED ROAD	114

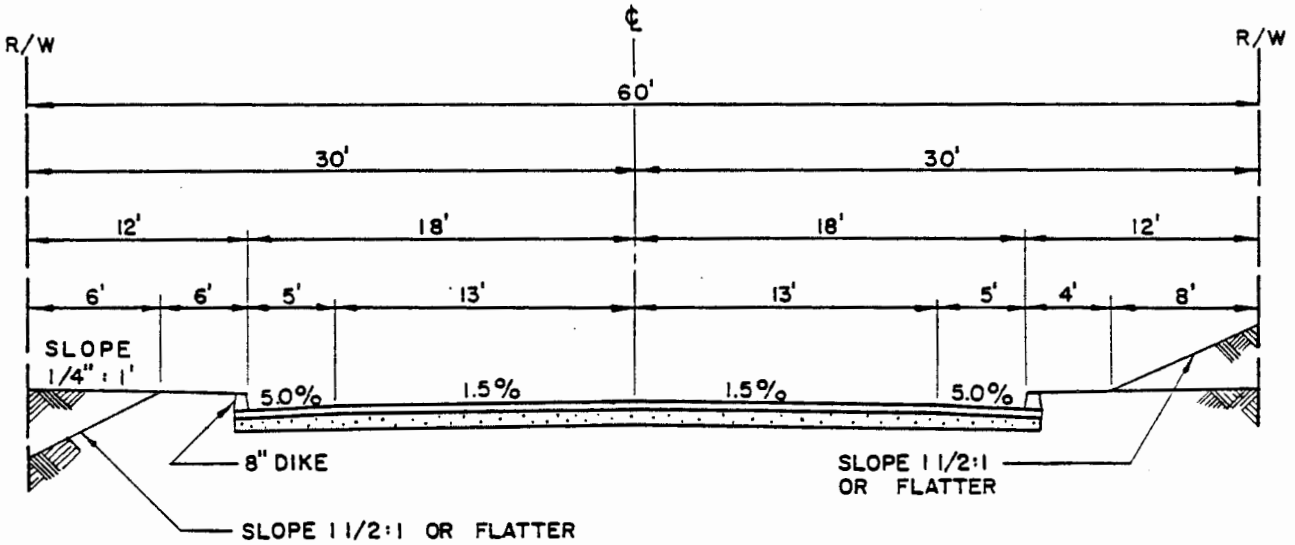

TYPICAL SECTION

WHERE REQUIRED FOR DRAINAGE PURPOSES

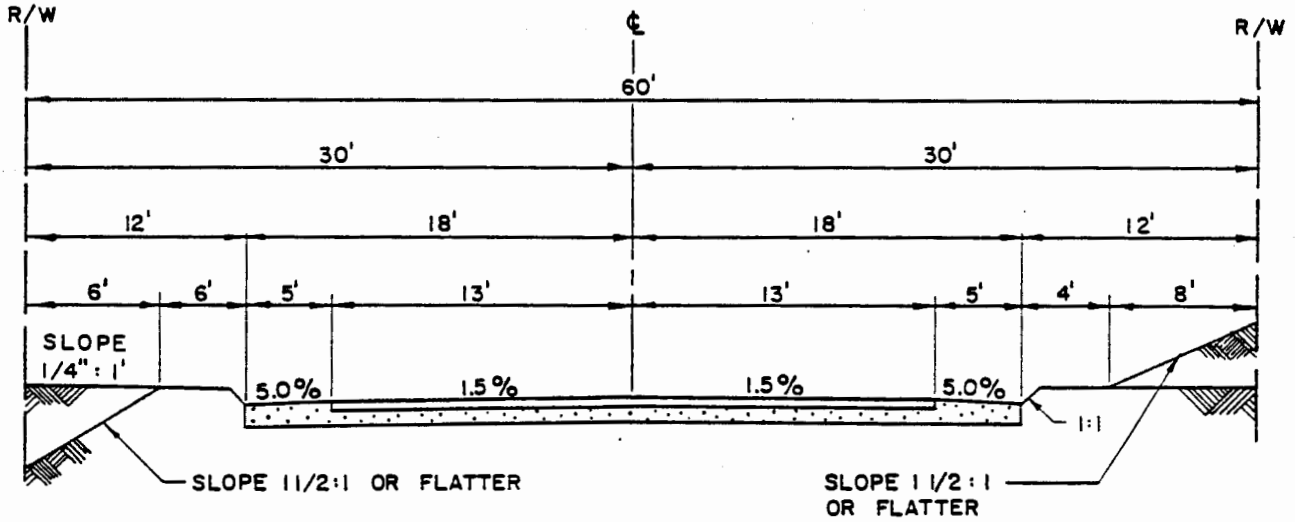

TYPICAL SECTION

NOTES:

1. STRUCTURAL SECTION OF ROADWAY SHALL BE DETERMINED FROM SOILS TESTS AND SO INDICATED ON CONSTRUCTION PLANS.
2. CONSTRUCTION OUTSIDE R/W LINE SHALL REQUIRE SLOPE EASEMENTS.
3. SLOPE REQUIREMENT MAY BE VARIED BY SUBMISSION OF SOILS REPORT.

SAN BERNARDINO COUNTY ROAD DEPARTMENT			
DATE: F.V.C. 5-65	*M. A. Nicholas* COUNTY ENGINEER	PAVED ROAD	114a

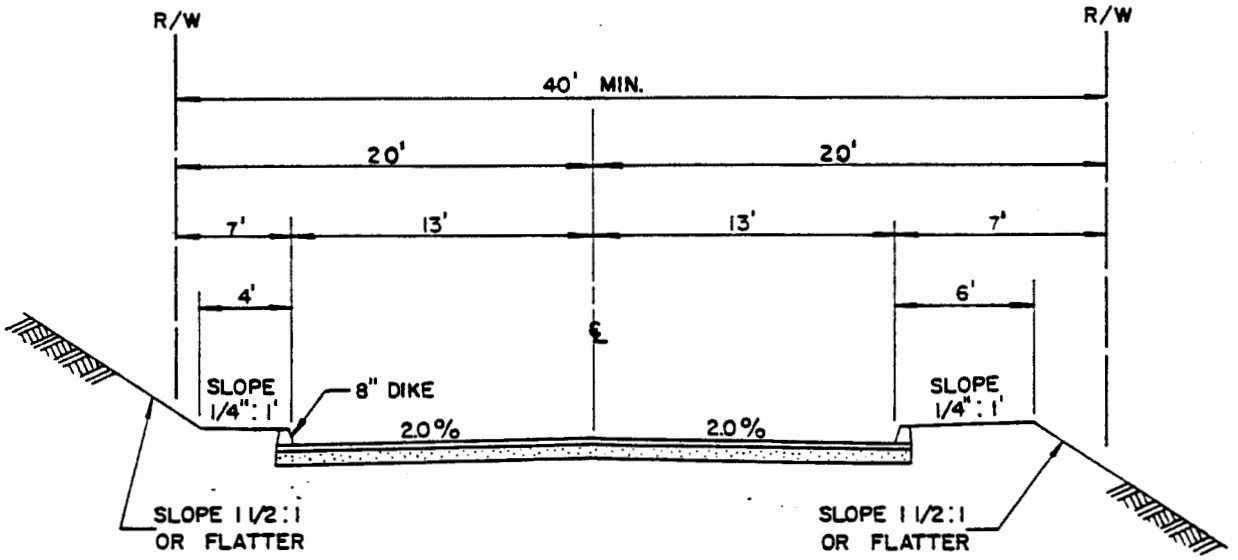

TYPICAL SECTION
MOUNTAIN AREAS

NOTES:

1. STRUCTURAL SECTION OF ROADWAY SHALL BE DETERMINED FROM SOILS TESTS AND SO INDICATED ON CONSTRUCTION PLANS.
2. CONSTRUCTION OUTSIDE R/W LINE SHALL REQUIRE SLOPE EASEMENTS.
3. SLOPE REQUIREMENT MAY BE VARIED BY SUBMISSION OF SOILS REPORT.

SAN BERNARDINO COUNTY ROAD DEPARTMENT			
DATE: J.E.M. 9-65 PR 8-80	*M. A. Nicholas* COUNTY ENGINEER	PAVED ROAD	114b

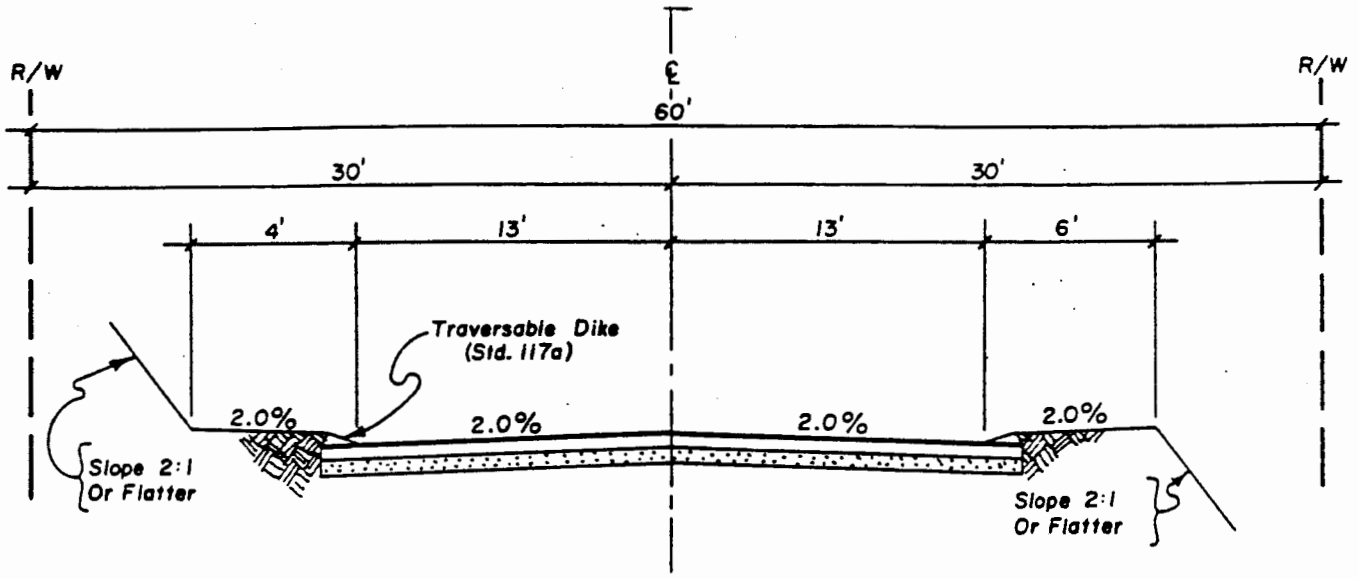

TYPICAL SECTION

HILLSIDE

NOTES:

1. Structural Section Of Roadway Shall Be Determined From Soils Test And So Indicated On Construction Plans.
2. Construction Outside R/W Line Shall Require Slope Easements.
3. Slope Requirement May Be Varied By Submission Of Soils Report.

3-31-93 vhc

SAN BERNARDINO COUNTY TRANS. DEPT.		HILLSIDE PAVED ROAD	114c
REV. 3/1/94	KEN A. MILLER Director of Transportation		

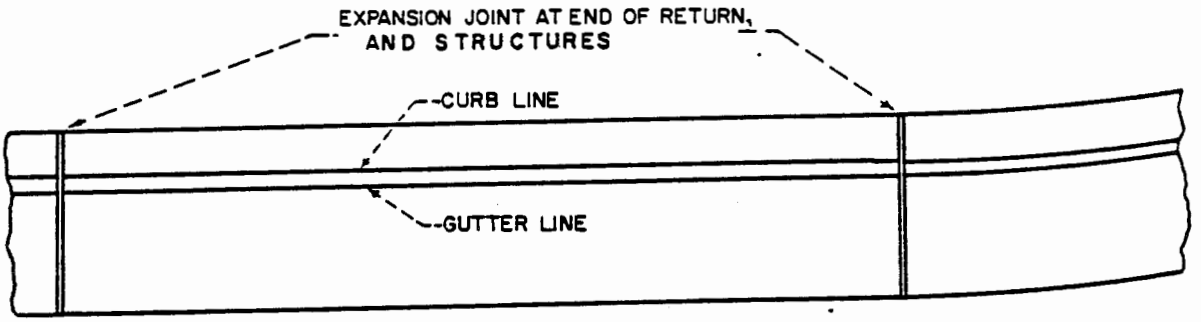

PLAN

0.0535 CUBIC YARDS PER LINEAL FOOT.
18.7 LINEAL FEET PER CUBIC YARD.

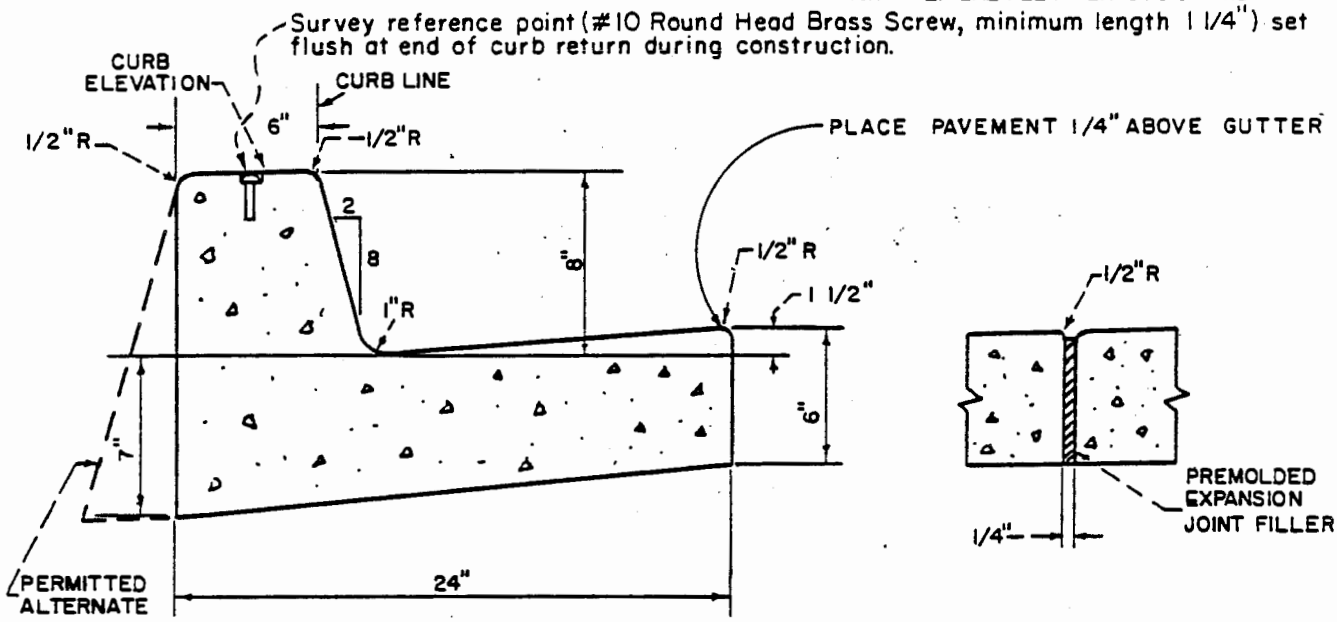

SECTION

EXPANSION JOINT

NOTES:

1. CURB AND GUTTER SHALL BE CONSTRUCTED MONOLITHICALLY OF CLASS "B" CONCRETE.
2. WIDTHS OF STANDARD STREET SECTIONS SHOWN ON PLANS ARE TO CURB LINE UNLESS OTHERWISE INDICATED.
3. WEAKENED PLANE JOINTS SHALL BE CONSTRUCTED AT 10-FOOT INTERVALS, EXCEPT THAT THE INTERVAL SHALL BE VARIED TO ALLOW MATCHING OF JOINTS IN ADJACENT EXISTING IMPROVEMENTS
4. CURING COMPOUND SHALL BE SPRAYED UNIFORMLY ON EXPOSED SURFACES.
5. WHEN CURB AND GUTTER IS PLACED BY AN EXTRUSION MACHINE MINOR FINISHING MAY BE DONE TO PROVIDE AN ACCEPTABLE FINISH AND THE WEAKENED PLANE JOINTS MAY BE SAWCUT.

SAN BERNARDINO COUNTY ROAD DEPARTMENT		8" CURB AND GUTTER	115
REV. V.E.H. 3-74 REV. V.E.H. 7-76 Rev. VEH 2-79	John R. Shone COUNTY HIGHWAY ENGINEER		

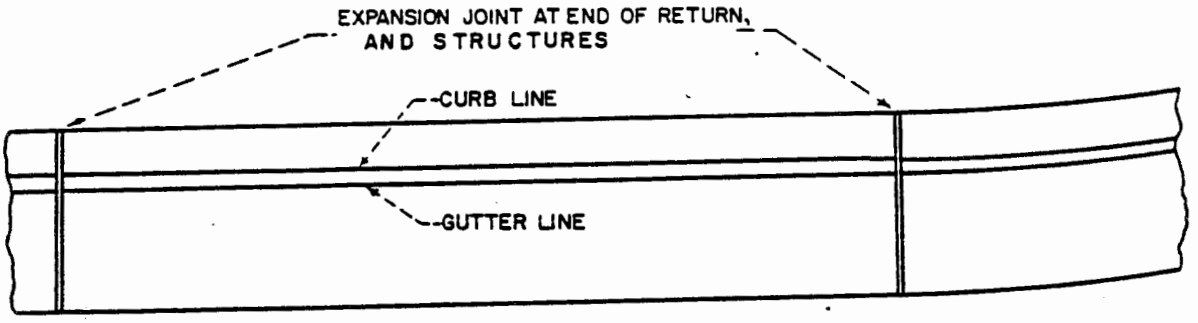

PLAN

0.0495 CUBIC YARDS PER LINEAL FOOT.
20.2 LINEAL FEET PER CUBIC YARD.

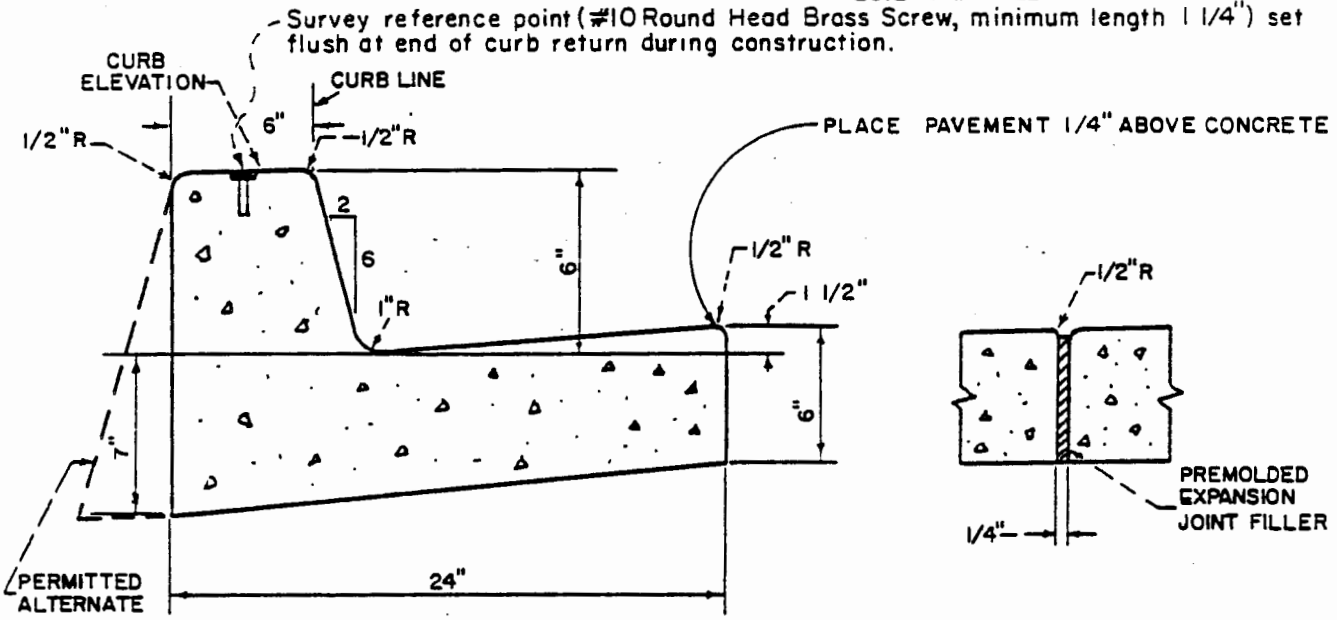

SECTION

EXPANSION JOINT

NOTES:

1. 6" CURB SHALL ONLY BE USED ON LOCAL STREETS WHERE DRAINAGE PERMITS.
2. CURB AND GUTTER SHALL BE CONSTRUCTED MONOLITHICALLY OF CLASS "B" CONCRETE.
3. WIDTHS OF STANDARD STREET SECTIONS SHOWN ON PLANS ARE TO CURB LINE UNLESS OTHERWISE INDICATED.
4. WEAKENED PLANE JOINTS SHALL BE CONSTRUCTED AT 10-FOOT INTERVALS, EXCEPT THAT THE INTERVAL SHALL BE VARIED TO ALLOW MATCHING OF JOINTS IN ADJACENT EXISTING IMPROVEMENTS
5. CURING COMPOUND SHALL BE SPRAYED UNIFORMLY ON EXPOSED SURFACES.
6. WHEN CURB AND GUTTER IS PLACED BY AN EXTRUSION MACHINE MINOR FINISHING MAY BE DONE TO PROVIDE AN ACCEPTABLE FINISH AND THE WEAKENED PLANE JOINTS MAY BE SAWCUT.

SAN BERNARDINO COUNTY TRANS. DEPARTMENT APPR. 3-75 Rev. VEH 2-79	John R. Shone DIRECTOR OF TRANSPORTATION	6" CURB AND GUTTER	116

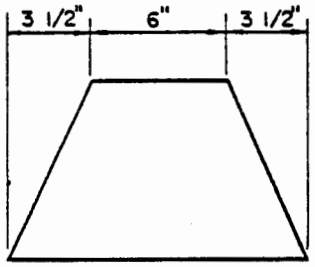

SECTION

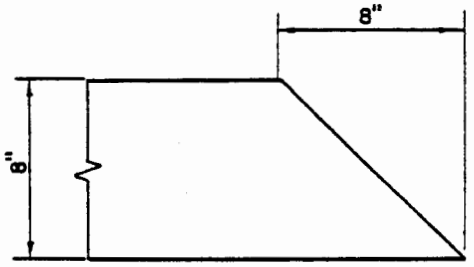

END CUTOFF

8" DIKE

NOTES:

1. DIKE SHALL BE CONSTRUCTED OF TYPE B ASPHALT CONCRETE.
2. PAINT BINDER SHALL BE PLACED ON EXISTING ASPHALT CONCRETE PAVEMENT PRIOR TO THE INSTALLATION OF THE DIKE.

SAN BERNARDINO COUNTY ROAD DEPARTMENT		ASPHALT CONCRETE DIKE	117
DATE: F.V.C. 6-65	*M. A. Nicholas* COUNTY ENGINEER		

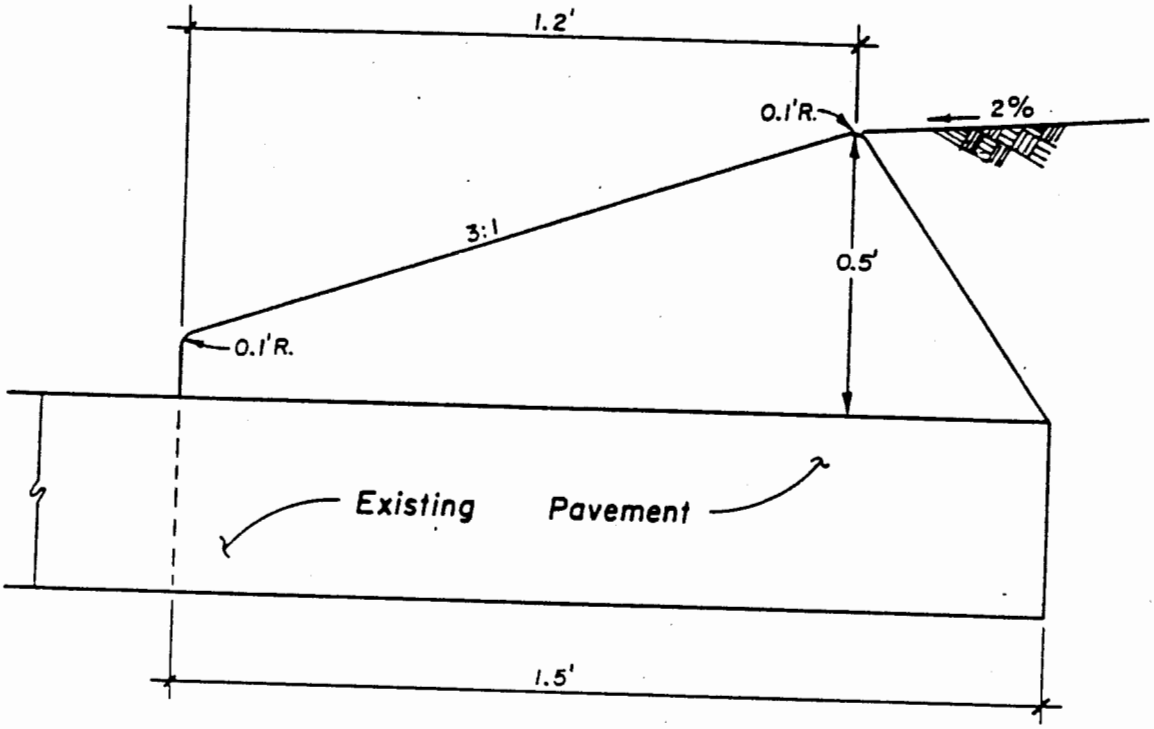

TYPICAL SECTION

NOTES:

1. Dike Shall Be Constructed Of Type B Asphalt Concrete.
2. Paint Binder Shall Be Placed On Existing Asphalt Concrete Pavement Prior To The Installation Of The Dike.

4-1-93 vhc

SAN BERNARDINO COUNTY TRAN. DEPT.			
REV. 3/1/94	KEN A. MILLER Director of Transportation	TRAVERSABLE DIKE	117a

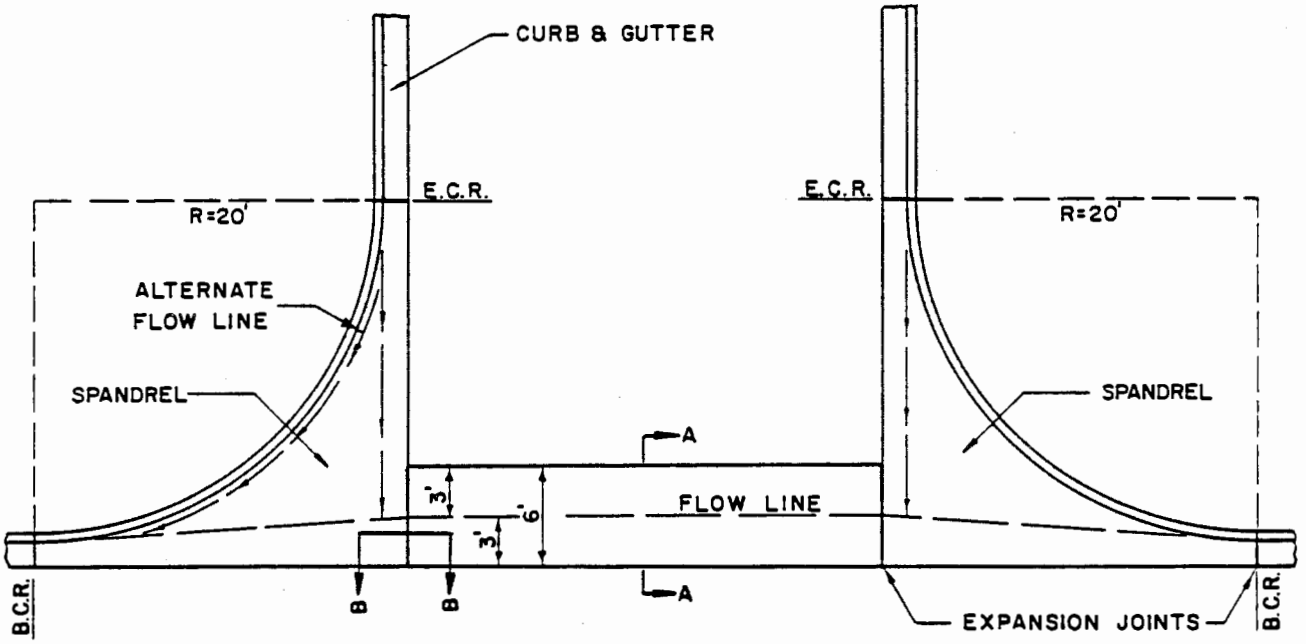

PLAN

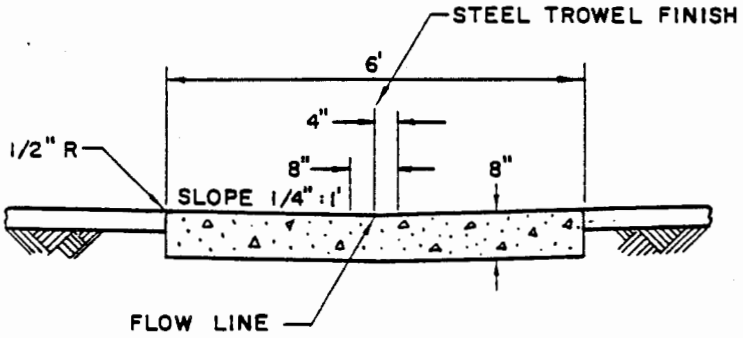

SECTION A-A

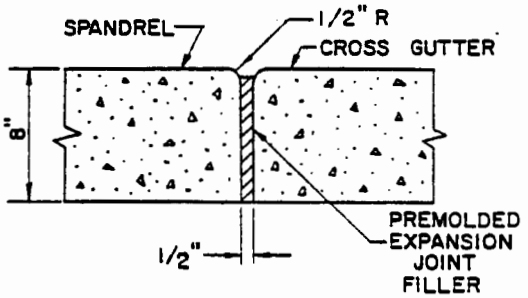

SECTION B-B

NOTES:

1. CROSS GUTTER SHALL BE CONSTRUCTED OF CLASS "B" CONCRETE.
2. THE STRAIGHT GRADE BETWEEN B.C.R.'S MAY BE ALTERED ON AN EXCESSIVE GRADE.
3. A 0.3' MINIMUM FALL IS REQUIRED BETWEEN E.C.R. AND CROSS GUTTER FLOWLINE.
4. SPANDREL SHALL BE 8" THICKNESS CLASS "B" CONCRETE.
5. VARIABLE CURB FACE ALLOWED FOR DRAINAGE PURPOSES.

SAN BERNARDINO COUNTY ROAD DEPARTMENT			
DATE: J.V.C. 4-65	*M. A. Nicholas* COUNTY ENGINEER	CROSS GUTTER	119

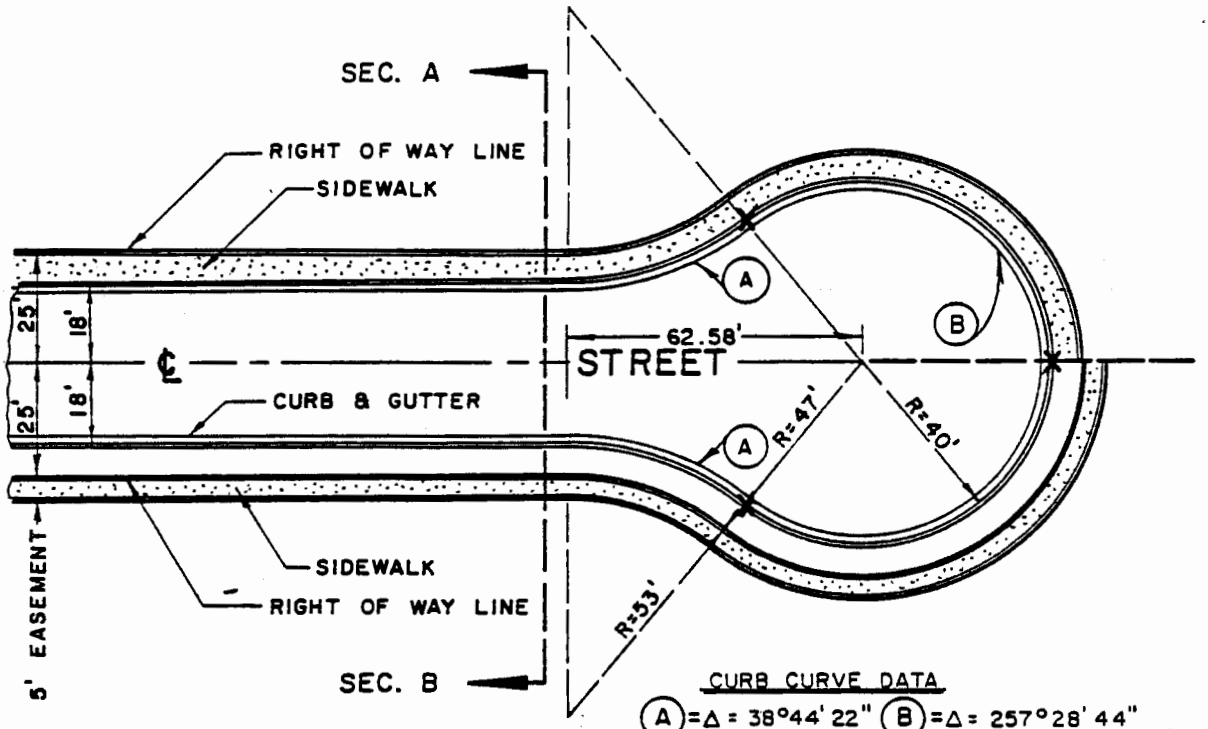

CURB CURVE DATA

(A) = Δ = 38°44' 22"
R = 60.00'
T = 21.09'
L = 40.57'

(B) = Δ = 257°28' 44"
R = 40.00'
L = 179.75'

PLAN

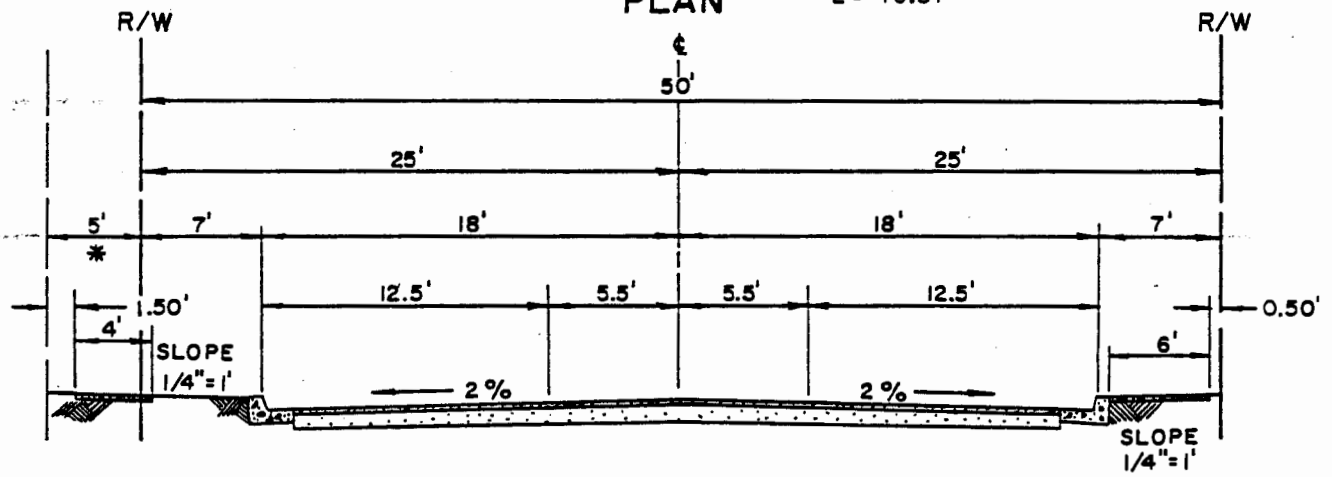

TYPICAL SECTION

NOTES:

1. STRUCTURAL SECTION OF ROADWAY SHALL BE DETERMINED FROM SOIL TESTS AND SO INDICATED ON CONSTRUCTION PLANS.
2. CONSTRUCTION OUTSIDE R/W LINE SHALL REQUIRE SLOPE EASEMENTS.
3. 0.6% GRADE MIN. ON GUTTER OF BULB.
4. TILT SECTION SHALL CONFORM TO LOCAL STREET STANDARD NO. 104.

* 5' WIDE SIDEWALK AND PUBLIC UTILITIES EASEMENT AT THE OPTION OF THE OWNER, THIS AREA MAY BE DEDICATED AS ROAD RIGHT OF-WAY.

6. X Indicates position of survey reference point (#10 Round Head Brass Screw minimum length 1 1/4") set flush with top of curb during construction.

San Bernardino County Transportation Department Rev. VEH 2-79	John R. Shone DIRECTOR OF TRANSPORTATION	CUL-DE-SAC	120

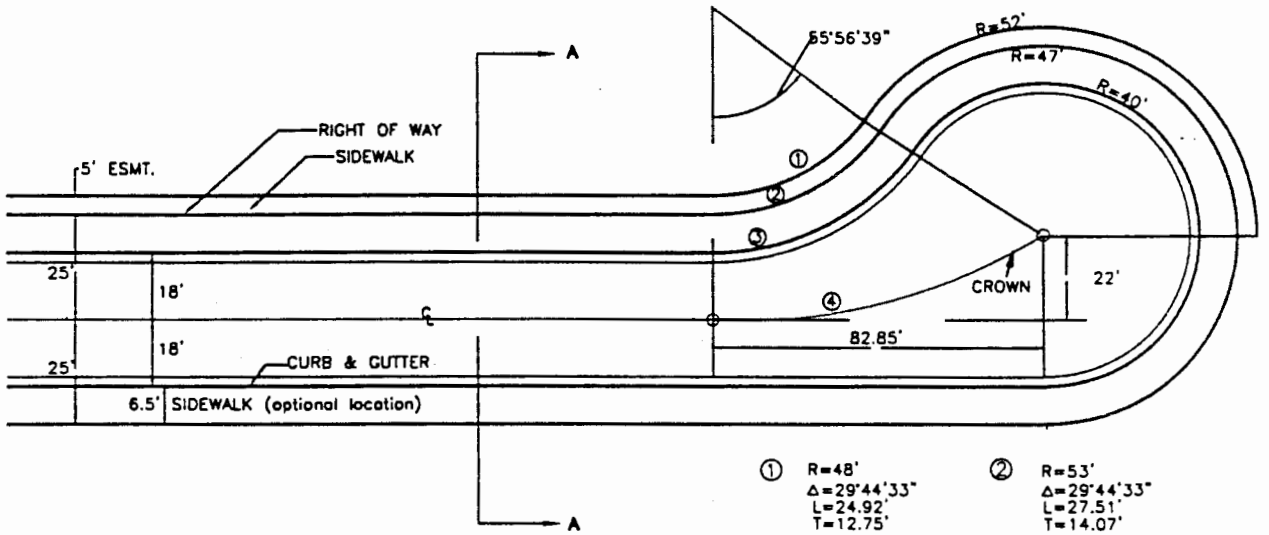

PLAN

① R=48'
Δ=29°44'33"
L=24.92'
T=12.75'

② R=53'
Δ=29°44'33"
L=27.51'
T=14.07'

③ R=60'
Δ=29°44'33"
L=31.15'
T=15.93'

④ R=167'
Δ=29°44'33"
L=86.69'
T=44.35'

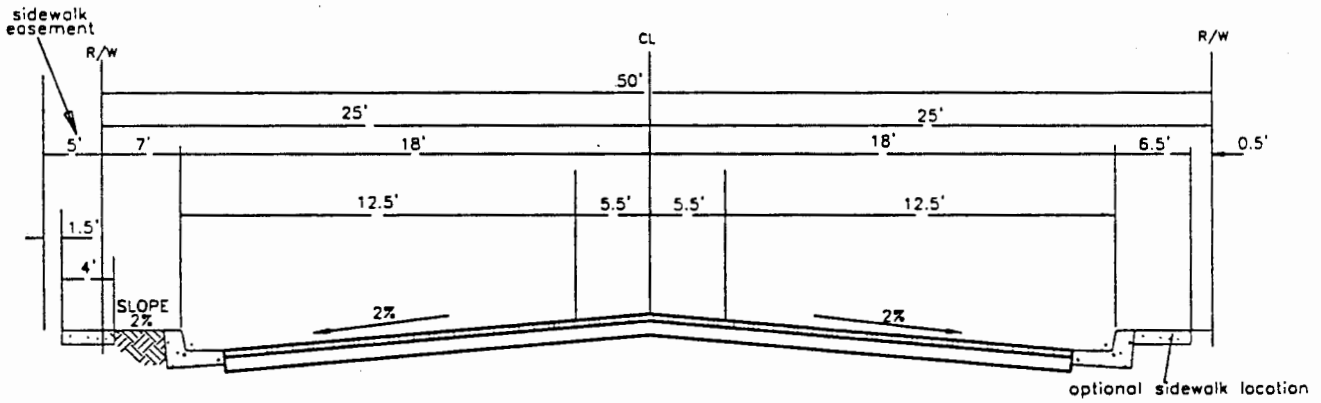

TYPICAL SECTION A–A

NOTES:

1. STRUCTURAL SECTION OF ROADWAY SHALL BE DETERMINED FROM SOIL TESTS AND SO INDICATED ON CONSTRUCTION PLANS.
2. CONSTRUCTION OUTSIDE R/W LINE SHALL REQUIRE SLOPE EASEMENTS.
3. 0.6% GRADE MIN. ON GUTTER OF BULB.
4. TILT SECTION SHALL CONFORM TO LOCAL STREET STANDARD NO.104.
5. SIDEWALK SHALL CONFORM TO LOCAL STREET STANDARD NO.109.
6. SIDEWALK AND PUBLIC UTILITIES EASEMENT AT THE OPTION OF THE OWNER, THIS AREA MAY BE DEDICATED AS ROAD RIGHT–OF–WAY.
7. X INDICATES POSITION OF SURVEY REFERENCE POINT (#10 ROUNDHEAD BRASS SCREW MINIMUM LENGTH 1.25" SET FLUSH WITH TOP OF CURB DURING CONSTRUCTION.

SAN BERNARDINO COUNTY TRANS. DEPT.			
	KEN A. MILLER Director of Transportation	OFFSET CUL–DE–SAC	120A

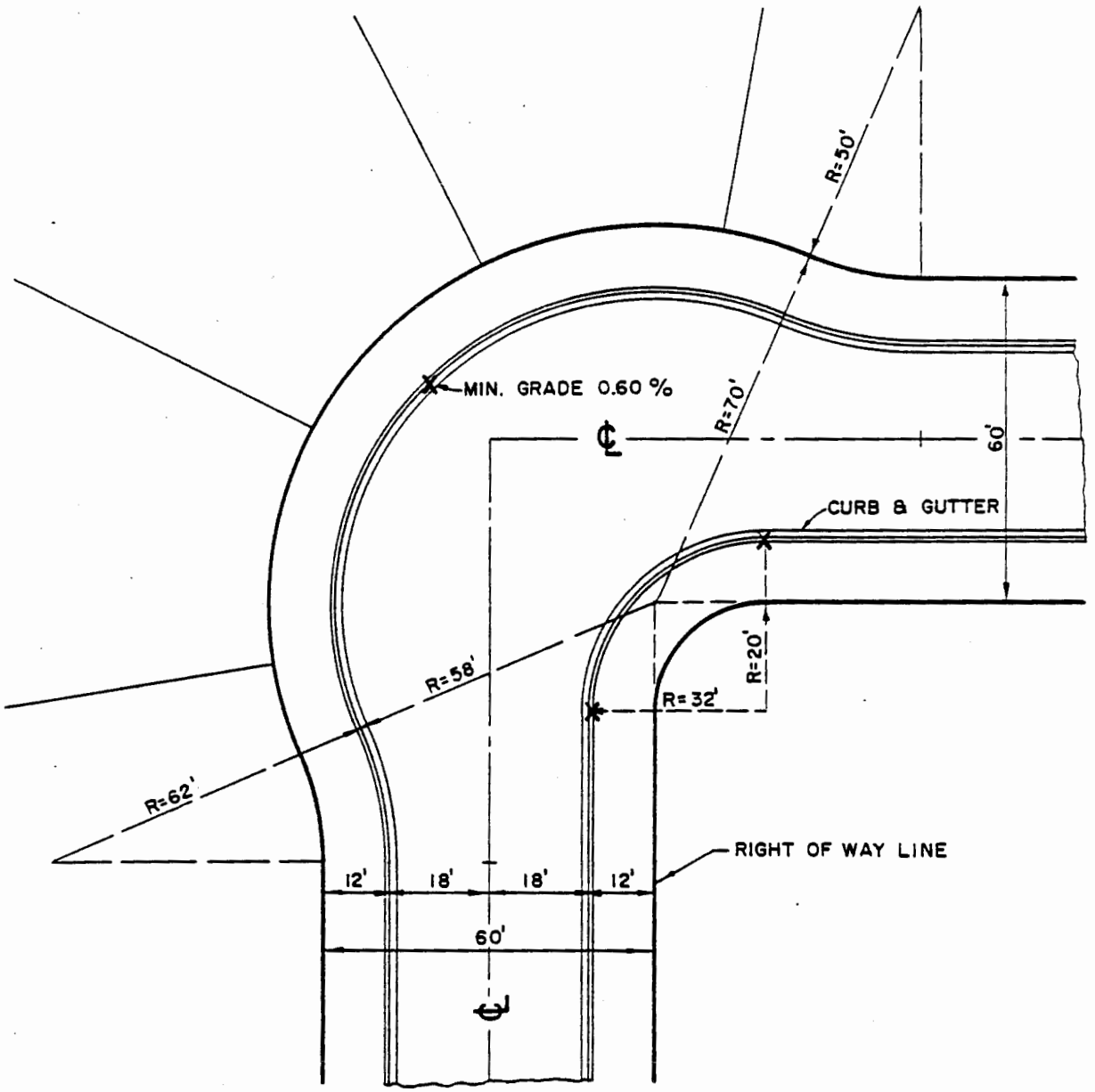

PLAN

NOTES:

1. MINIMUM 0.60% ON ALL HORIZONTAL CURVE GRADES.
2. SEE STANDARD NO. 104 FOR TYPICAL SECTION.
3. X Indicates position of survey reference point (#10 Round Head Brass Screw, minimum length 1 1/4") set flush with top of curb during construction.

SAN BERNARDINO COUNTY ROAD DEPARTMENT DATE: F.V.C. 4-65 Rev. VFH 2-79	*M. A. Nicholas* COUNTY ENGINEER	INTERSECTION DESIGN "L" SHAPE	121

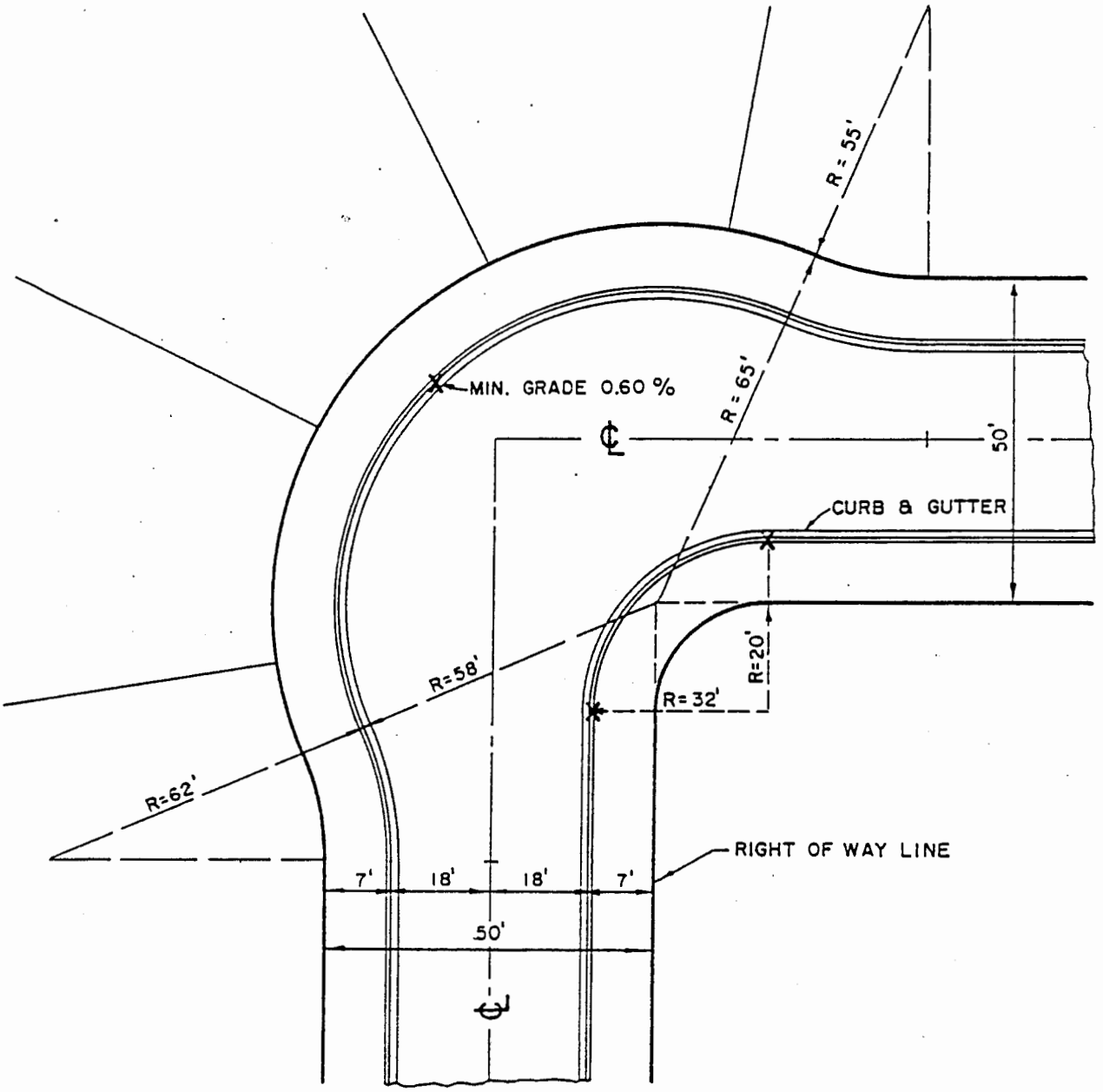

PLAN

NOTES:

1. MINIMUM 0.60% ON ALL HORIZONTAL CURVE GRADES.
2. SEE STANDARD NO. 104A FOR TYPICAL SECTION, AND NOTES.
3. X Indicates position of survey reference point (#10 Round Head Brass Screw, minimum length 1 1/4") set flush with top of curb during construction.

SAN BERNARDINO COUNTY ROAD DEPARTMENT DATE: F.V.C. 4-65 Rev. VFH 2-79 RO 8-89	*Ken A. Miller* DIRECTOR OF TRANSPORTATION	INTERSECTION DESIGN "L" SHAPE 50' R/W	121A

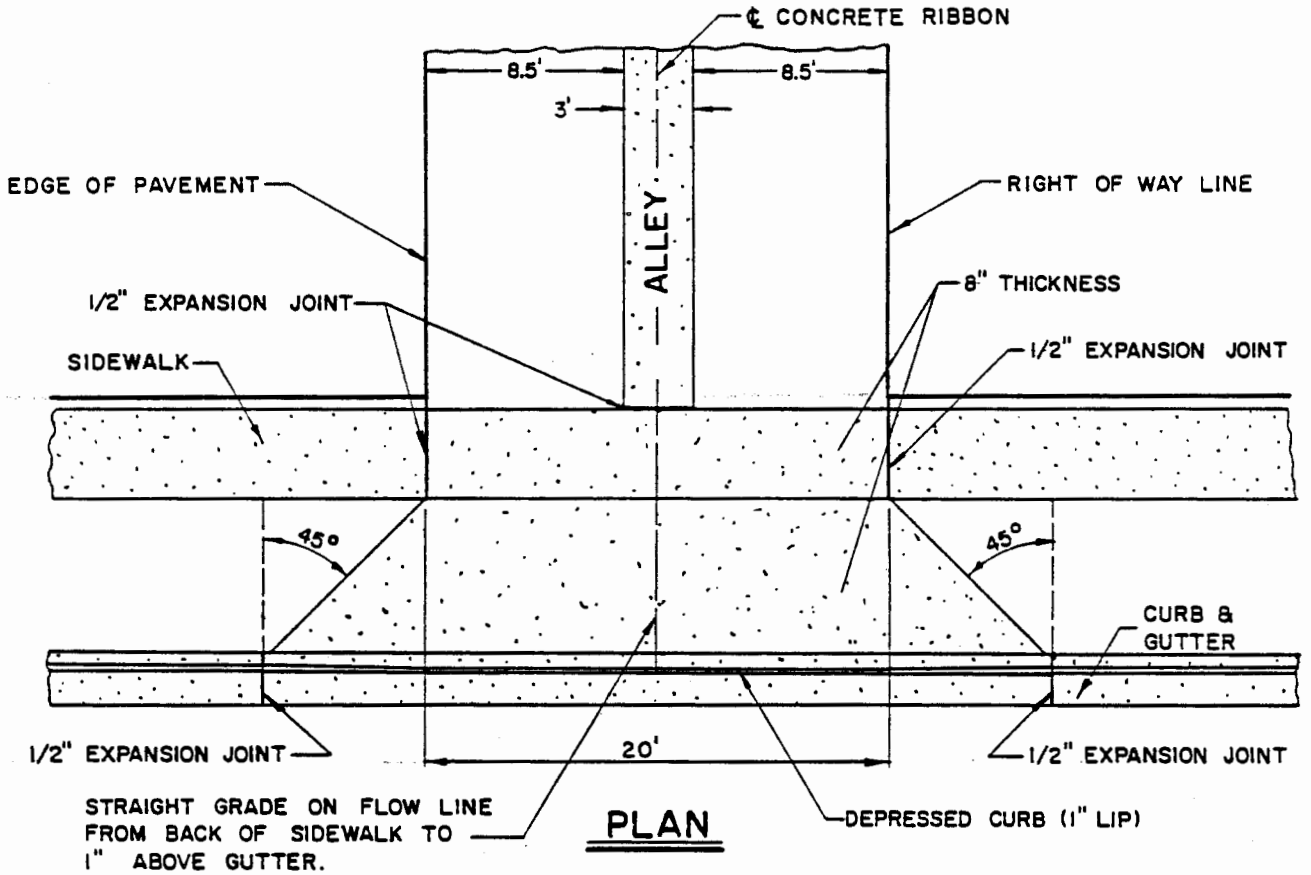

PLAN

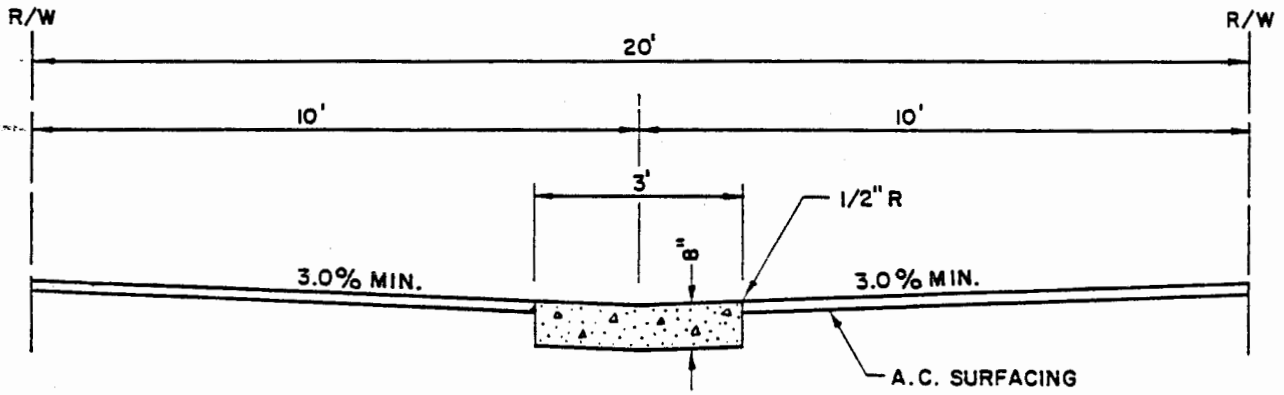

TYPICAL SECTION

NOTES:

1. CONCRETE RIBBON SHALL BE CONSTRUCTED OF CLASS "B" CONCRETE.
2. ASPHALT CONCRETE SHALL HAVE A MINIMUM THICKNESS OF TWO INCHES.

SAN BERNARDINO COUNTY ROAD DEPARTMENT			
DATE: J.V.C. 4-65	M. A. Nicholas COUNTY ENGINEER	ALLEY	125

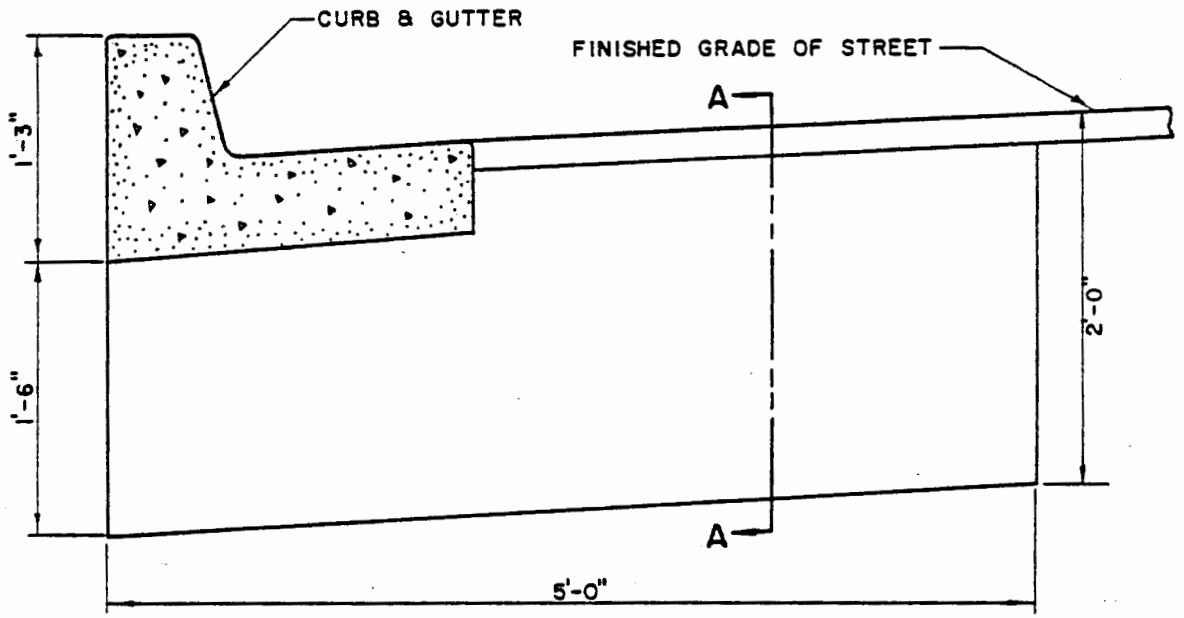

ELEVATION

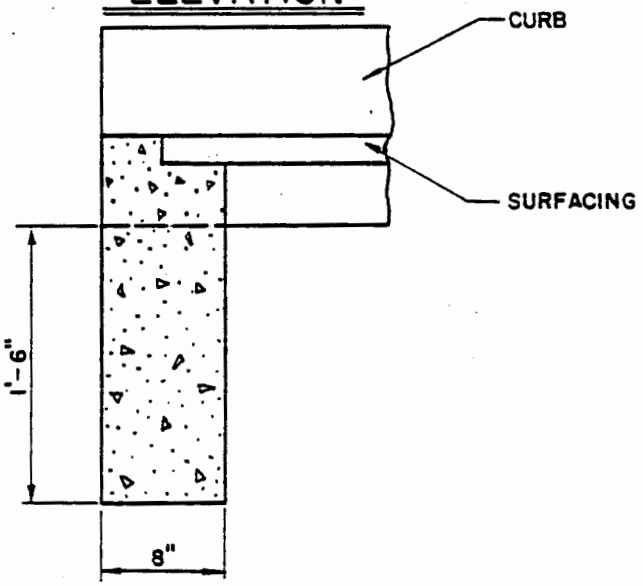

SECTION A-A

NOTES:

1. CUTOFF WALL SHALL BE CONSTRUCTED OF CLASS "B" CONCRETE.
2. CUTOFF WALL SHALL BE INSTALLED WHERE REQUIRED BY DRAINAGE CONDITIONS.

SAN BERNARDINO COUNTY ROAD DEPARTMENT DATE: J.V.C. 4-65	*M. A. Nicholas* COUNTY ENGINEER	CURB CUT OFF WALL	127

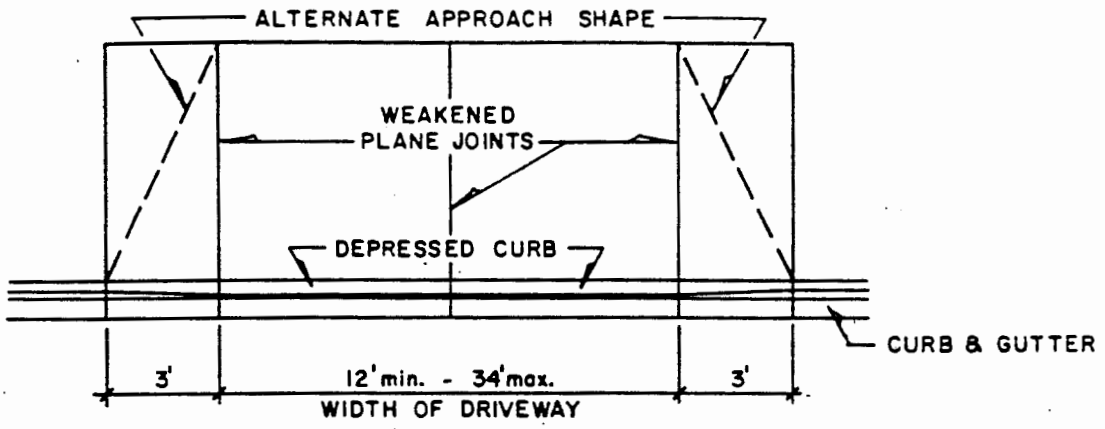

PLAN

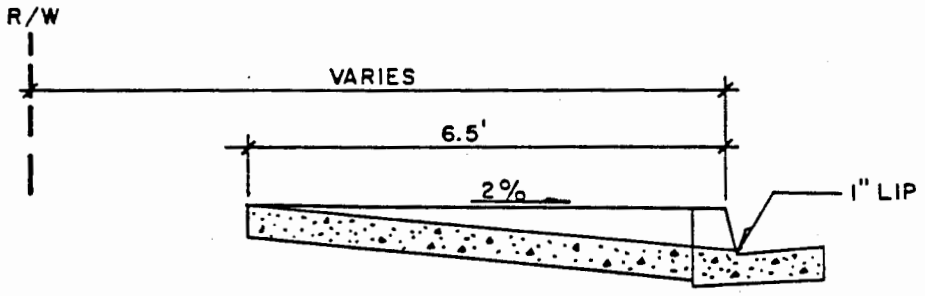

SECTION

NOTES:

1. Driveway Approach Location Shall Be As Indicated In The S.B. Co. Transportation Department Road Planning & Design Manual And Per Standard No. 130.
2. To Construct A Depression In Existing Curb And Gutter:
   a. Saw Cut And Remove For The Necessary Width.
   b. Remove And Reconstruct To The Nearest Joint.
   c. Horizontal Saw Cut And Remove Curb As Necessary.
3. An Approach Must Be Constructed With Each Curb Depression.
4. Surfacing Shall Be Portland Cement Concrete Class 'B' (5 Sack) 4" Thick And Have A Broom Finish.

SAN BERNARDINO COUNTY TRANS. DEPT.		RESIDENTIAL DRIVEWAY APPROACH WITH CURB	128
OCT. 1, 1993 v.h.c.	KEN A. MILLER Director of Transportation		
REV. 3/1/94			

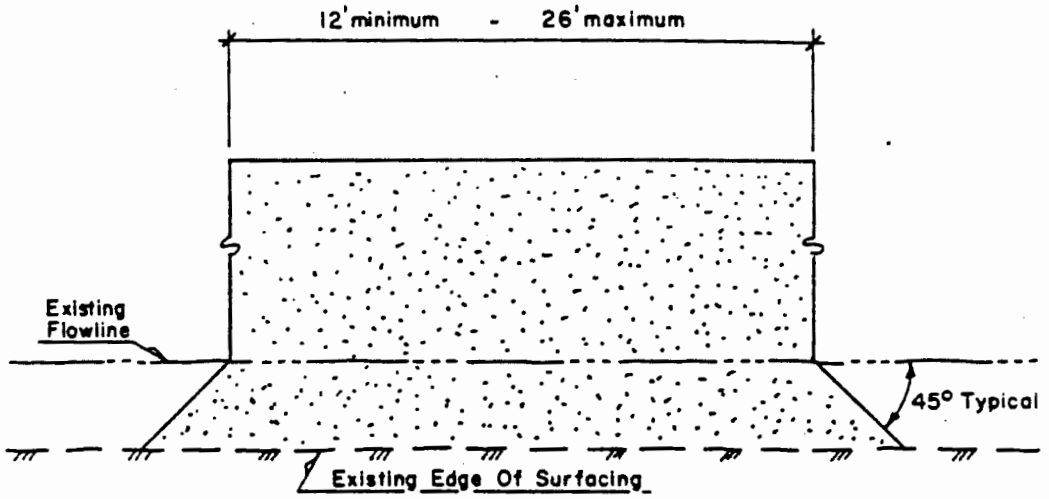

PLAN

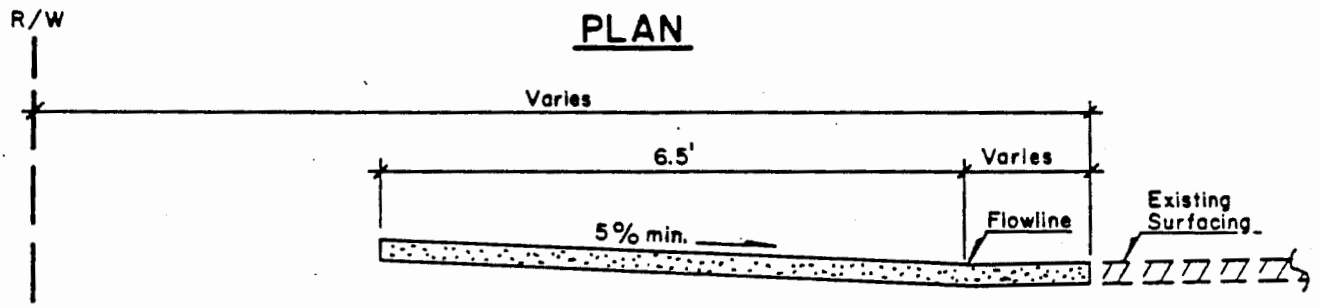

SECTION

NOTES:

1. Driveway Approach Location Shall Be As Indicated In The S.B. County Transportation Department Road Planning & Design Manual And Per Standard Nº 130.
2. Surfacing Material Shall Be:
   a. Type 'B' Asphalt Concrete Grade AR-4000, 1/2" Max. Med., 3" Thick.
   b. In Areas Not Regularly Subjected To Snowplowing, Portland Cement Concrete Class 'B', 4" Thick May Be Used.
   c. Unpaved, If The Roadway Is Unpaved.
3. Flowline Grade Shall Be Maintained.
4. Where Existing Berm Is Removed, The Approach Shall Be Constructed To An Elevation Equal In Height To Control Drainage.

SAN BERNARDINO COUNTY TRANS. DEPT.		RESIDENTIAL DRIVEWAY APPROACH WITHOUT CURB	128a
OCT. 4, 1993 v.h.c.	KEN A. MILLER Director of Transportation		
REV 3/1/94			

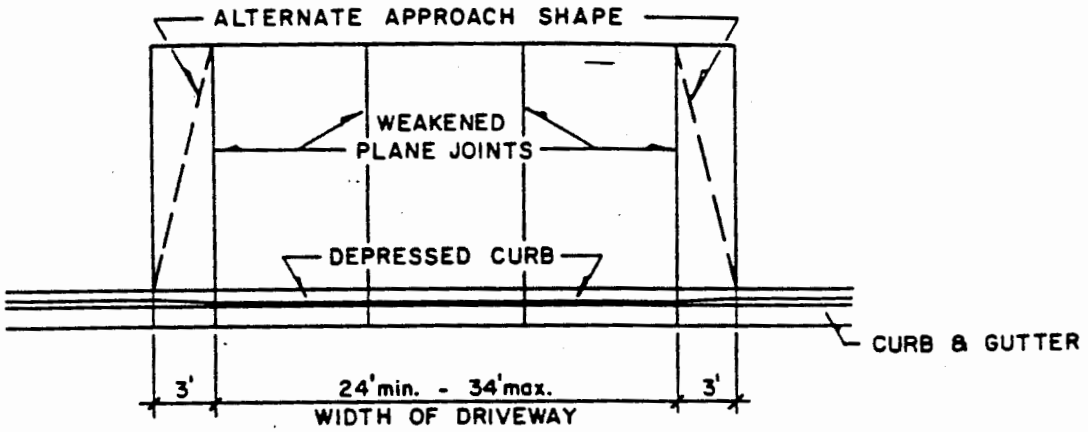

PLAN

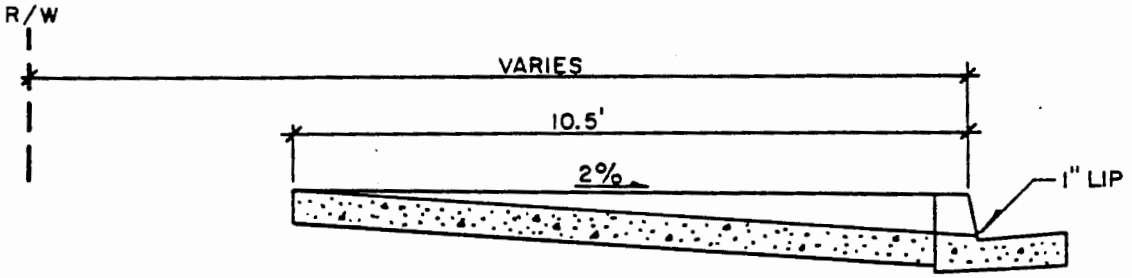

SECTION

NOTES:

1. Driveway Approach Location Shall Be As Indicated In The S.B. Co. Transportation Department Road Planning & Design Manual And Per Standard No. 130.
2. To Construct A Depression In Existing Curb And Gutter:
   a. Saw Cut And Remove For The Necessary Width.
   b. Remove And Reconstruct To The Nearest Joint.
   c. Horizontal Saw Cut And Remove Curb As Necessary.
3. An Approach Must Be Constructed With Each Curb Depression.
4. Surfacing Shall Be Portland Cement Concrete Class 'B' (5 Sack) 6" Thick And Have A Broom Finish.

10-1-93 vhc

SAN BERNARDINO COUNTY TRANS. DEPT.		COMMERCIAL DRIVEWAY APPROACH WITH CURB	129
REV. 3/1/94	KEN A. MILLER Director of Transportation		

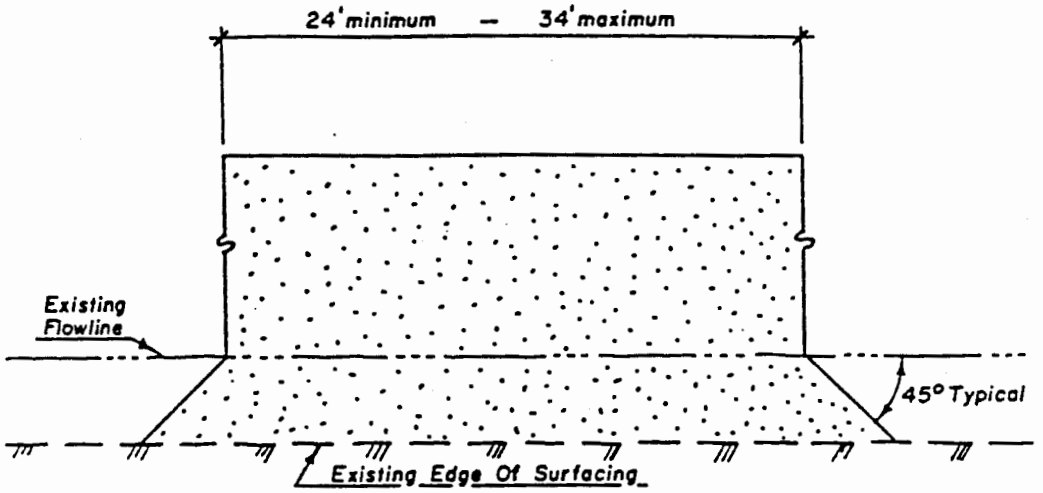

PLAN

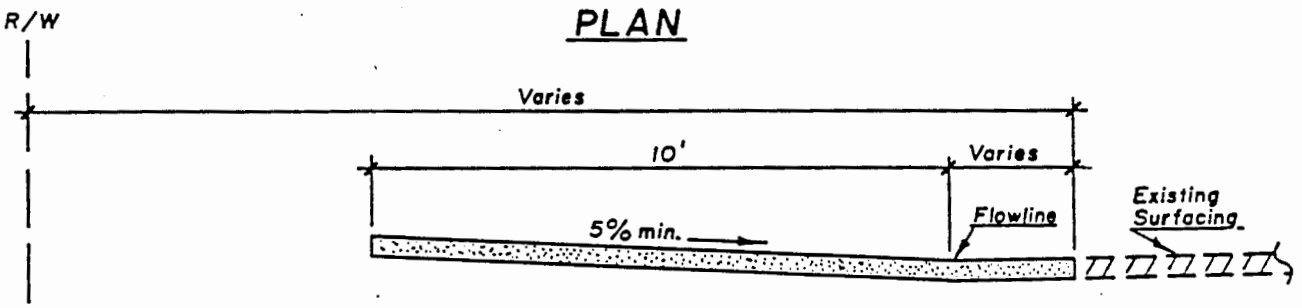

SECTION

NOTES:

1. Driveway Approach Location Shall Be As Indicated In The S.B. Co. Transportation Department Road Planning & Design Manual And Per Standard Nº 130.
2. Surfacing Material Shall Be:
   a. Type B Asphalt Concrete Grade AR-4000, 1/2" Max. Med., 3" Thick.
   b. In Areas Not Regularly Subjected To Snowplowing, Portland Cement Concrete Class B 6" Thick May Be Used.
   c. Unpaved, If The Roadway Is Unpaved.
3. Flowline Grade Shall Be Maintained.
4. Where Existing Berm is Removed, The Approach Shall Be Constructed To An Elevation Equal In Height To Control Drainage.

SAN BERNARDINO COUNTY TRANS. DEPT.		COMMERCIAL DRIVEWAY APPROACH WITHOUT CURB	129a
REV. 3/1/94	KEN A. MILLER Director of Transportation		

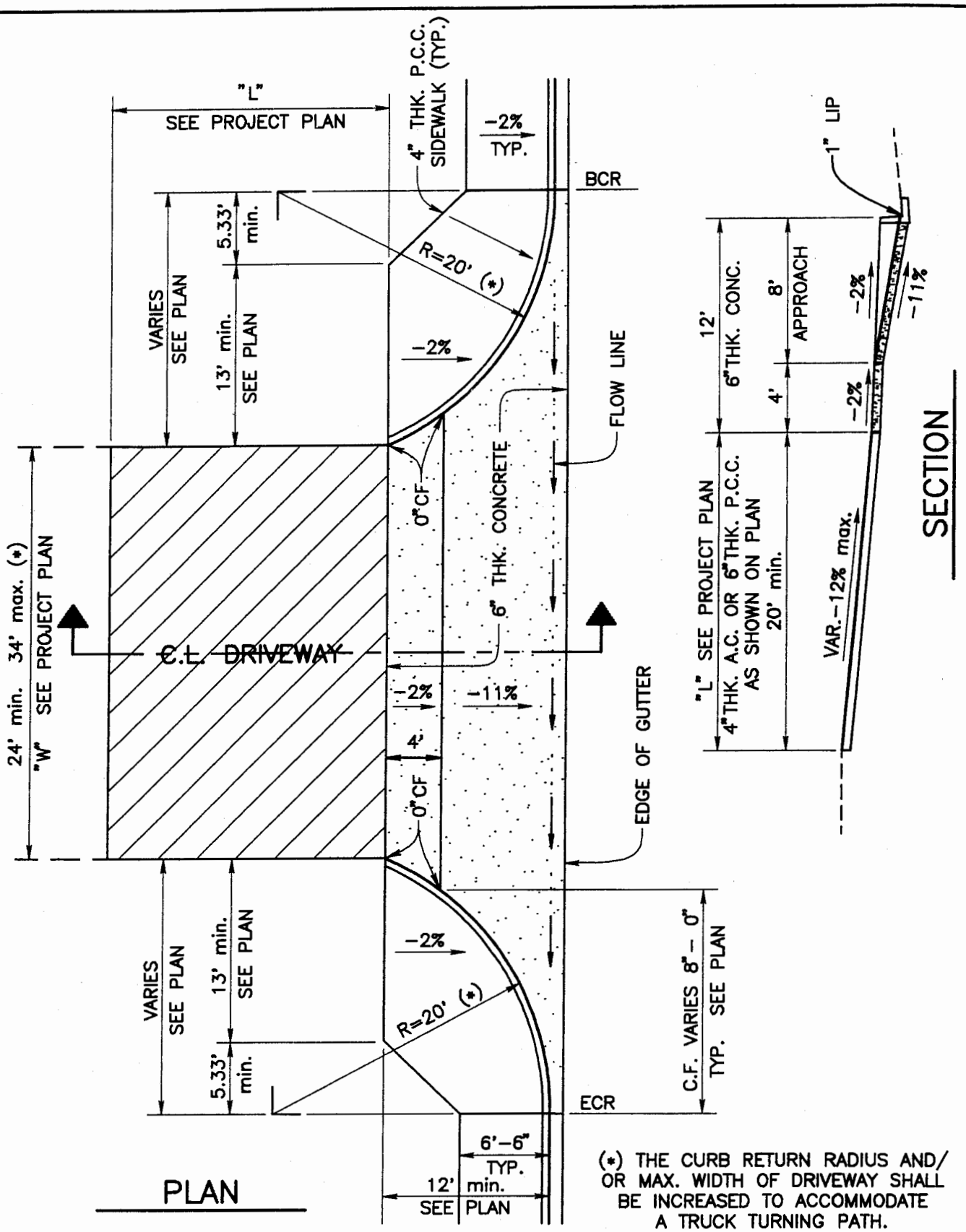

(*) THE CURB RETURN RADIUS AND/ OR MAX. WIDTH OF DRIVEWAY SHALL BE INCREASED TO ACCOMMODATE A TRUCK TURNING PATH.

NOTE: FOR GENERAL NOTES SEE COUNTY STANDARD 129

SEE TERRAMODEL FILE - N:\ M2201\ MISCDET.pro

CO. OF SAN BDNO. DEPT. OF PUBLIC WORKS			
REVISED: DATE G.M. 12-05	PATRICK J. MEAD Director of Public Works	COMMERCIAL DRIVEWAY WITH CURB RETURNS	129B

LOCAL STREET - COLLECTOR ROAD

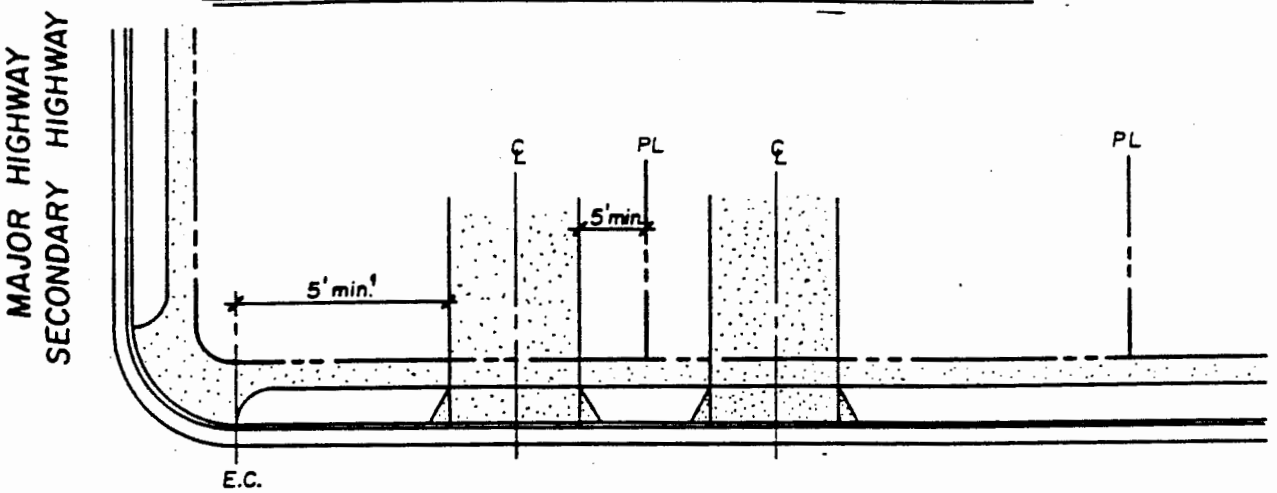

RESIDENTIAL DRIVEWAY

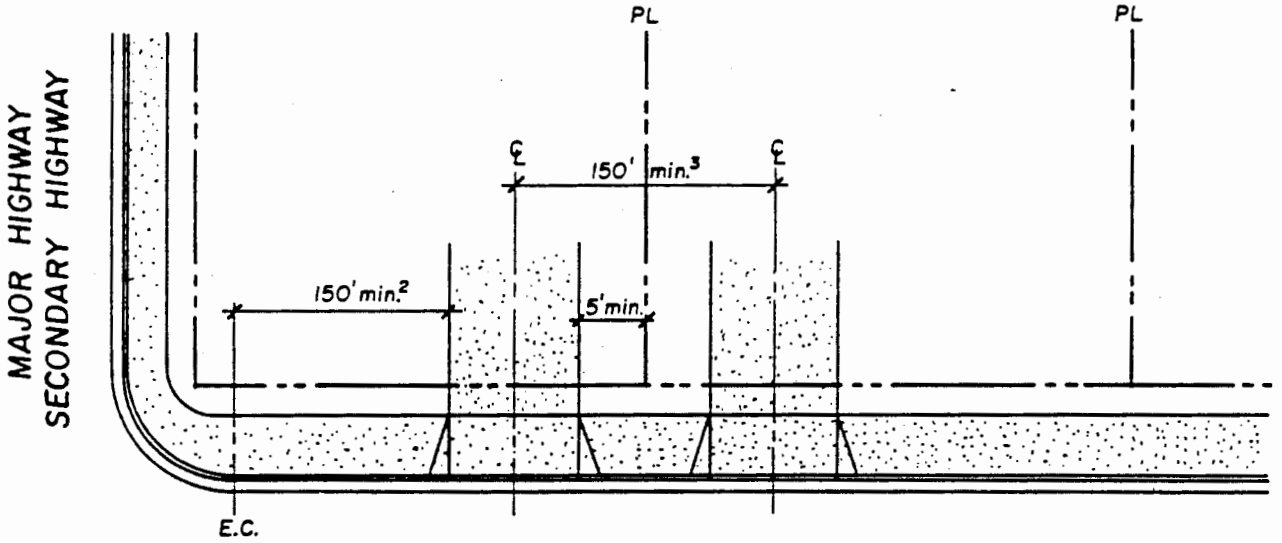

COMMERCIAL DRIVEWAY

NOTES:

Refer To Section 6.3 In S.B. Co. Transportation Dept. Road Planning & Design Manual For Number Of Access Points Permitted.

[1] 75' On Collector Roads, Except 50' If Ult. A.D.T. Is Less Than 3000.

[2] May Be Increased 75' On Collector Roads & 50' On Local Streets To Provide Additional Clearance For Left Turn Storage.

[3] Distance Determined Per Table 6-1, Page 6-3, In S.B. Co. Transportation Dept. Road Planning & Design Manual.

4-20-93 vhc

SAN BERNARDINO COUNTY TRANS. DEPT.			
REV. 3/1/94	KEN A. MILLER Director of Transportation	DRIVEWAY SPACING	130

RESIDENTIAL DRIVEWAY

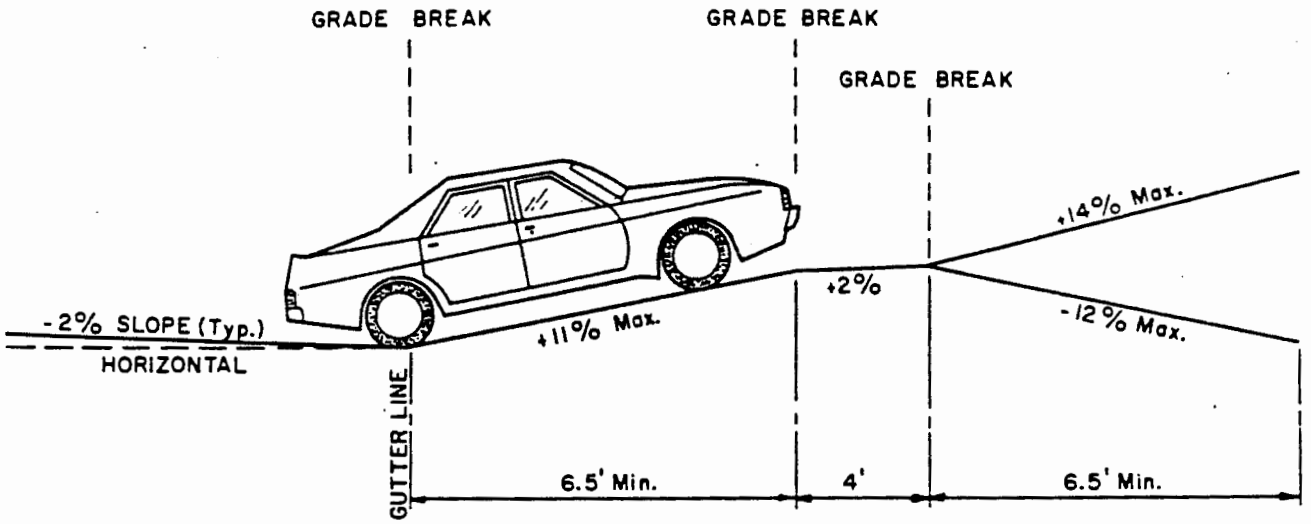

COMMERCIAL DRIVEWAY

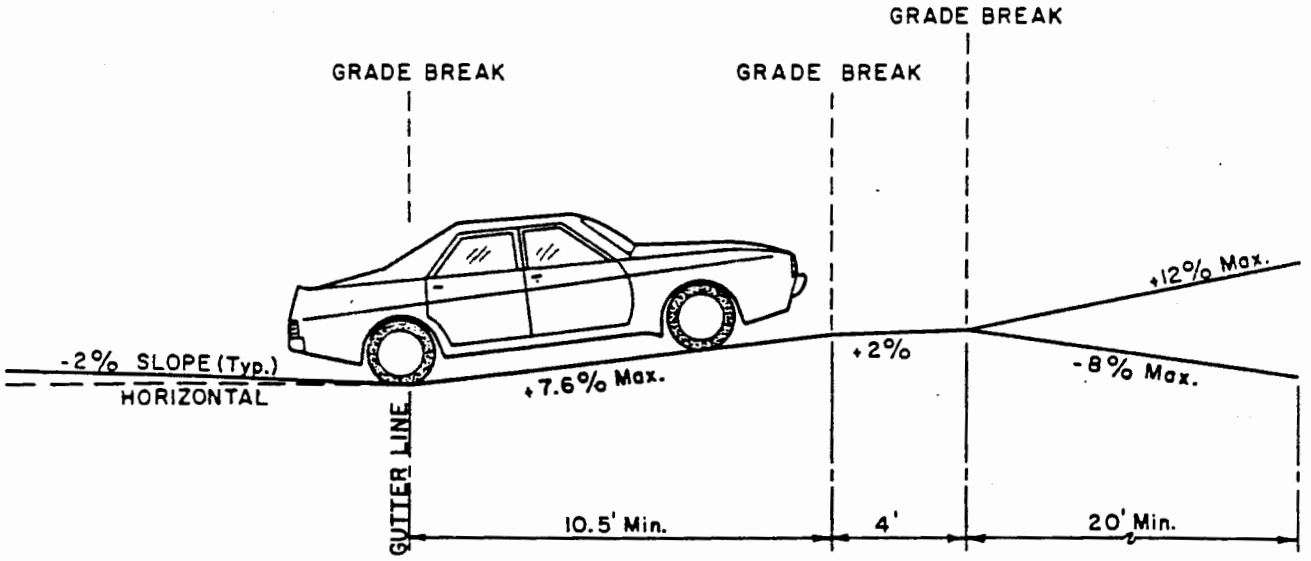

4-19-93 vhc

SAN BERNARDINO COUNTY TRANS. DEPT.		DRIVEWAY GRADES	131
REV. 3/1/99	KEN A. MILLER Director of Transportation		

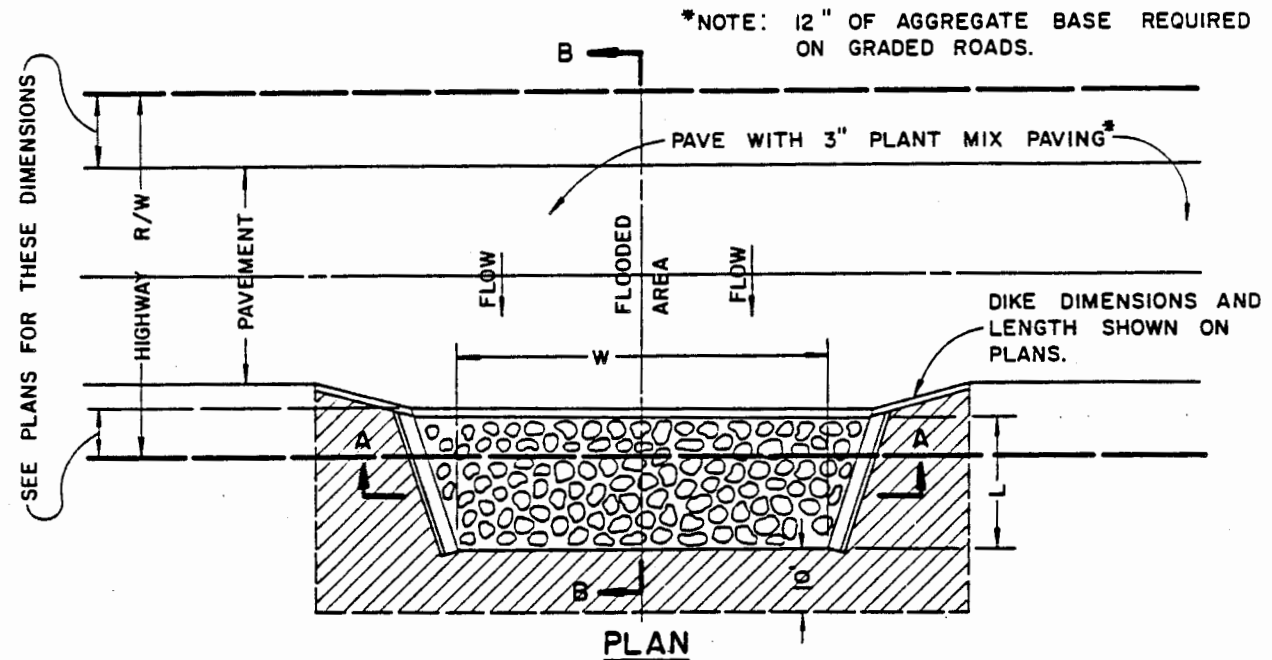

PLAN

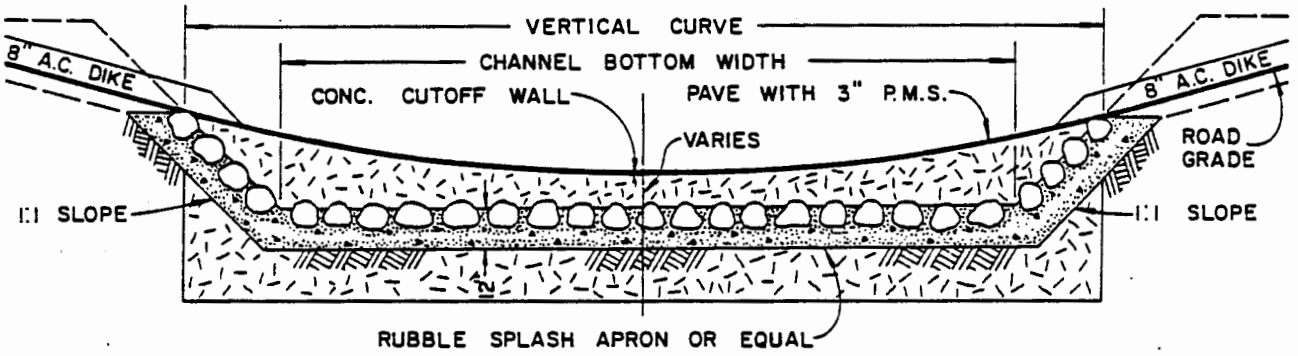

SECTION A-A

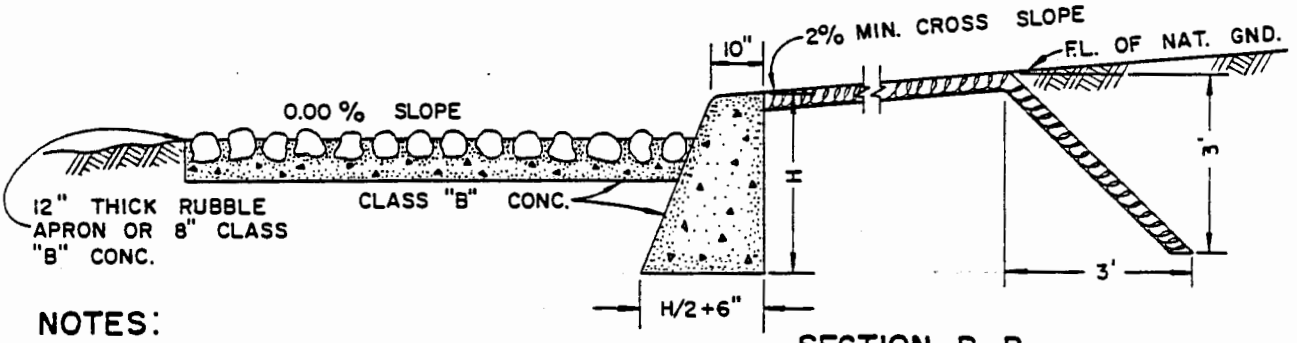

SECTION B-B

NOTES:

1. ALL CONCRETE TO BE CLASS "B".
2. L = SHOWN ON PLANS, H = 3' MIN., 6' MAX.
3. DRAINAGE EASEMENT REQUIRED.
4. AREA SHOWN THUS ▨ SHALL BE COMPACTED TO 90% RELATIVE DENSITY PER STANDARD SPECIFICATION 3.04.03.
5. REINFORCED BLOCK WALL AND FOOTING PERMITTED.

SAN BERNARDINO COUNTY ROAD DEPARTMENT			
DATE: J.E.M. 7-66	*M. A. Nicholas* COUNTY ENGINEER	CUTOFF WALL FOR DRAINAGE CHANNEL	200

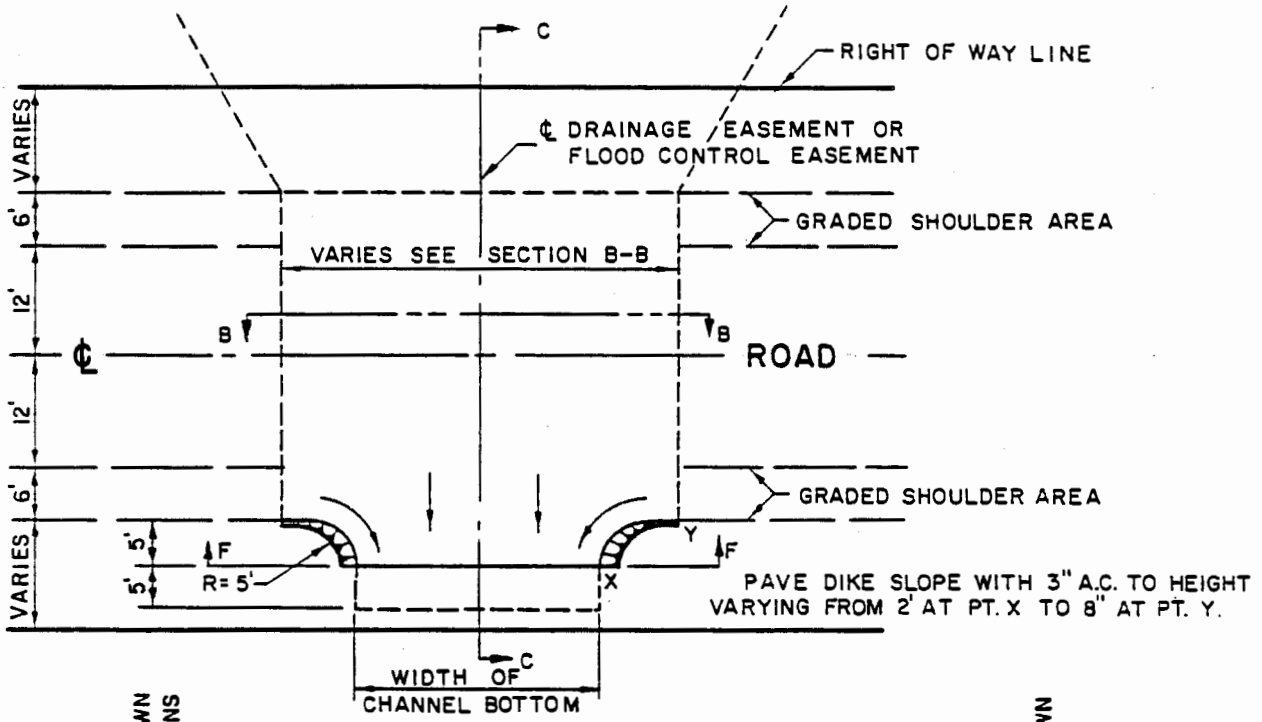

PLAN

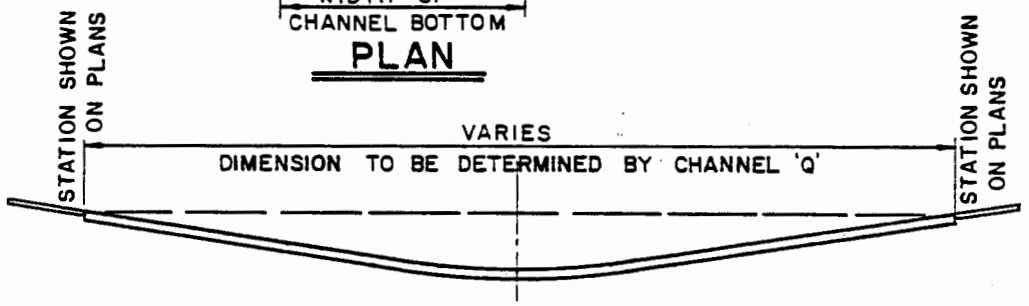

SECTION B-B

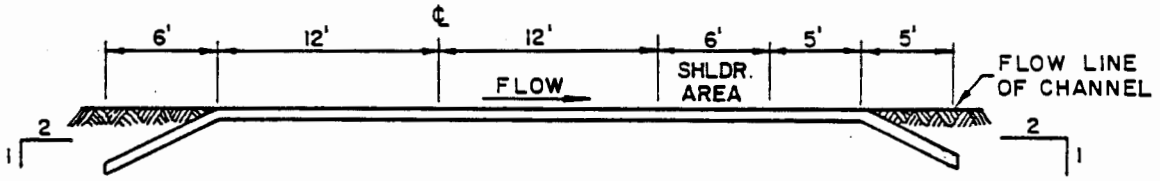

SECTION C-C

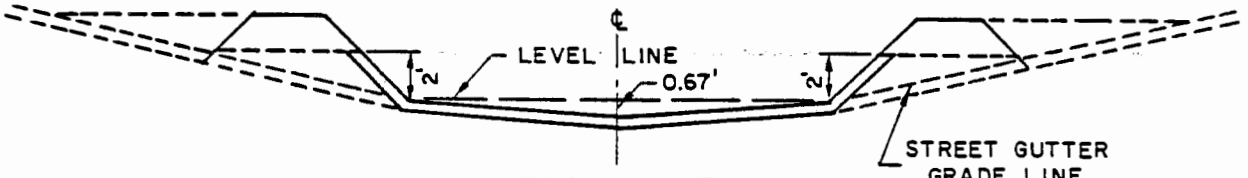

SECTION F-F

NOTE

PAVEMENT SHALL BE CONSTRUCTED OF 3" MIN. THICK ASPHALT CONCRETE.

SAN BERNARDINO COUNTY ROAD DEPARTMENT			
DATE: F.V.C. 7-65	*M. A. Nicholas* COUNTY ENGINEER	CHANNEL CROSSING	200a

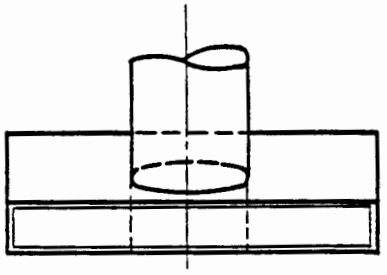

PLAN

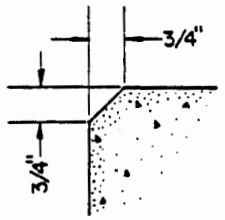

CHAMFER DETAIL

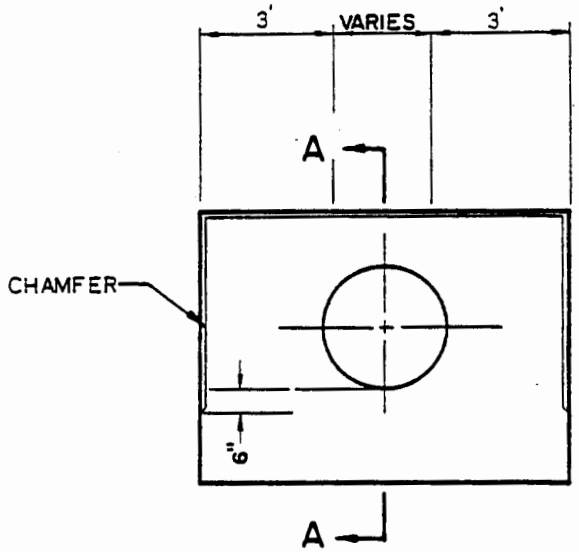

ELEVATION

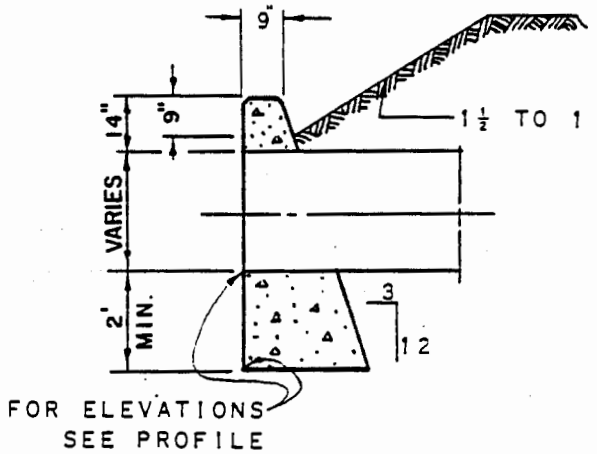

SECTION A-A

NOTES:

1. ALL CONCRETE SHALL BE CLASS B CONCRETE.
2. ALL EXPOSED CORNERS SHALL BE CHAMFERED 3/4".
3. DESIGN FEATURES SHALL CONTROL THE INSTALLATION OF THIS HEADWALL.

SAN BERNARDINO COUNTY ROAD DEPARTMENT			
DATE: F.V.C. 7-65	*M. A. Nicholas* COUNTY ENGINEER	GRAVITY HEADWALL	201

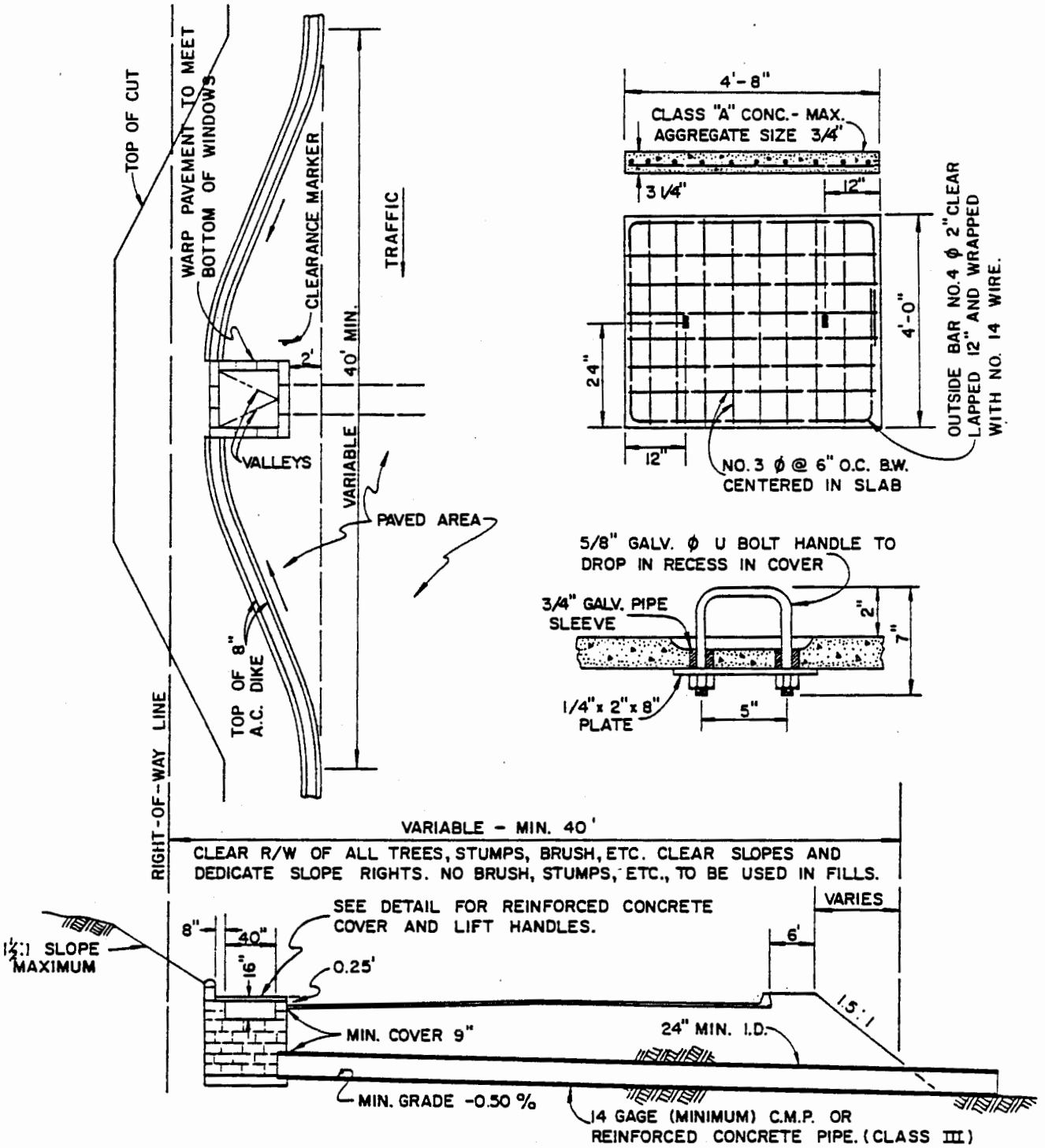

NOTES:

1. FOR CONSTRUCTION DETAILS OF CATCH BASIN SEE STD. NO. 202 A.

SAN BERNARDINO COUNTY ROAD DEPARTMENT			
DATE: J.E.M. 7-65	*M. A. Nicholas* COUNTY ENGINEER	CATCH BASIN MOUNTAIN ROADS	202

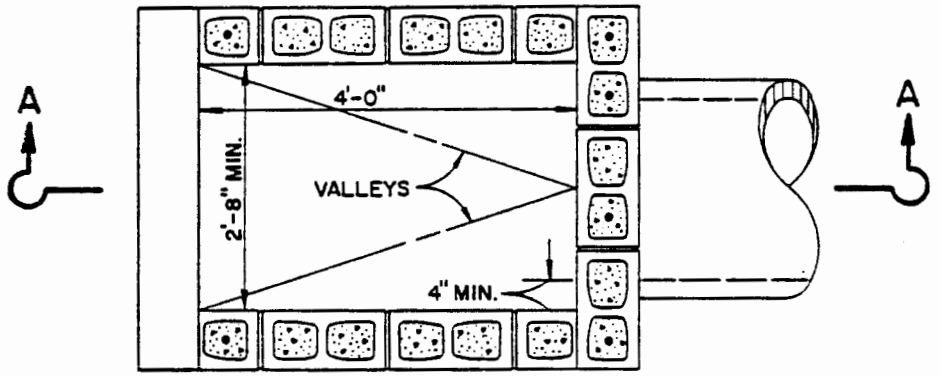

PLAN

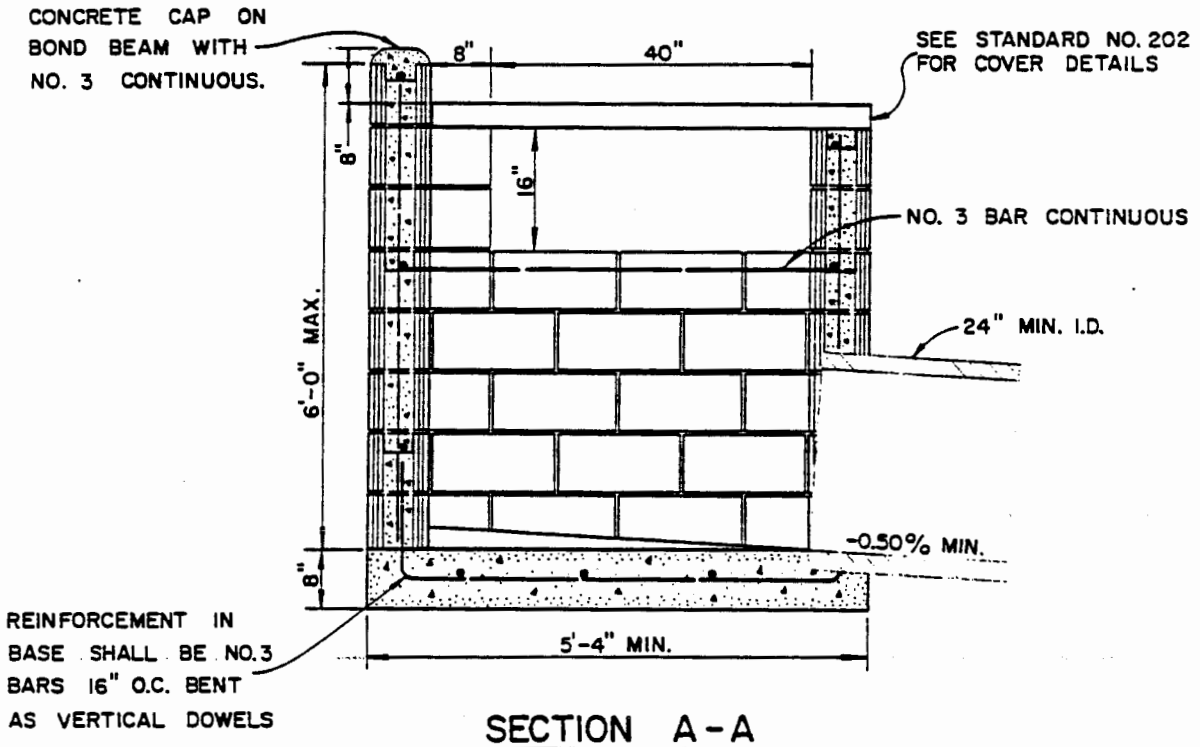

SECTION A-A

NOTES:

1. 8"x 8"x 16" CONC. BLOCK WITH NO. 3 STEEL 16" O.C. VERTICAL AND 24" O.C. HORIZONTAL.
2. FILL ALL BLOCKS WITH GROUT.
3. BASE OF CATCH BASIN SHALL BE CONSTRUCTED WITH CLASS 'B' CONCRETE.
4. HORIZONTAL STEEL SHALL BE PLACED IN BOND BEAM BLOCKS.

SAN BERNARDINO COUNTY ROAD DEPARTMENT			
DATE: J.E.M. 10-65	*M. A. Nicholas* COUNTY ENGINEER	CATCH BASIN MOUNTAIN ROADS	202 a

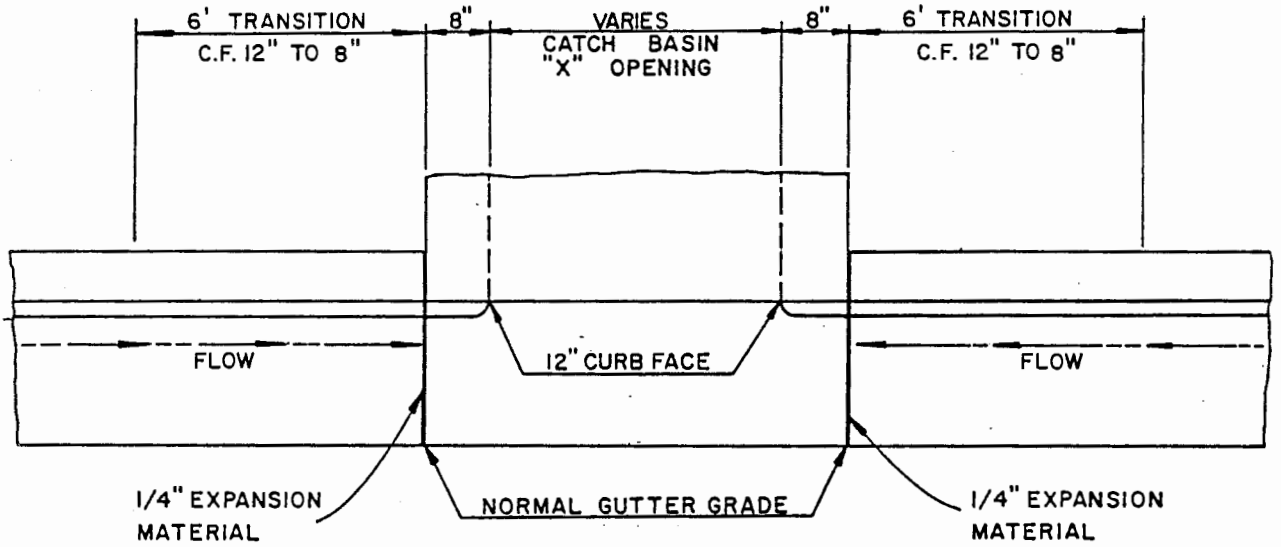

NOTES:

1. LOCAL DEPRESSION SHALL BE CONSTRUCTED OF CLASS B CONCRETE 6" THICK.
2. CURB AND GUTTER SHALL BE CONSTRUCTED PRIOR TO CONSTRUCTING TOP OF CATCH BASIN AND CURB TRANSITIONS.

SAN BERNARDINO COUNTY TRANS. DEPARTMENT			
L.V.F. 12-71 RO 8-89	KEN A. Miller Director of Transportation	LOCAL DEPRESSION	203

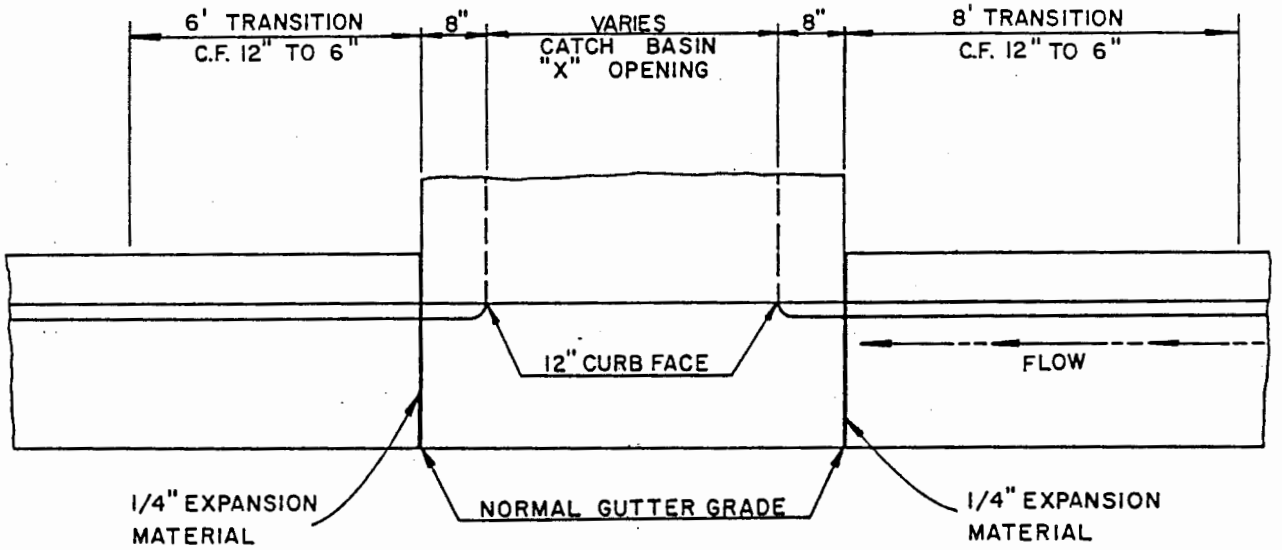

NOTES:

1. LOCAL DEPRESSION SHALL BE CONSTRUCTED OF CLASS B CONCRETE 6" THICK.
2. CURB AND GUTTER SHALL BE CONSTRUCTED PRIOR TO CONSTRUCTING TOP OF CATCH BASIN AND CURB TRANSITIONS.

SAN BERNARDINO COUNTY TRANS. DEPARTMENT			
L.V.F. 12-74 R.O.A. 88	*KEN A. Miller* Director of Transportation	LOCAL DEPRESSION	203 A.

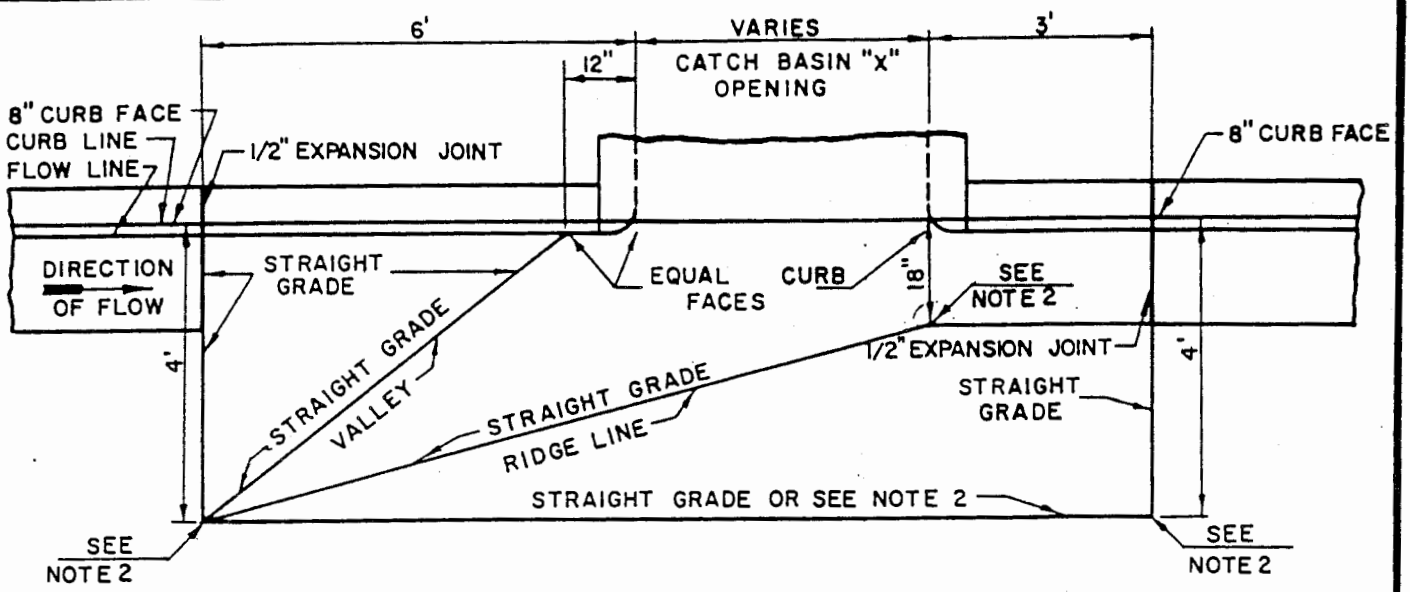

TYPE A

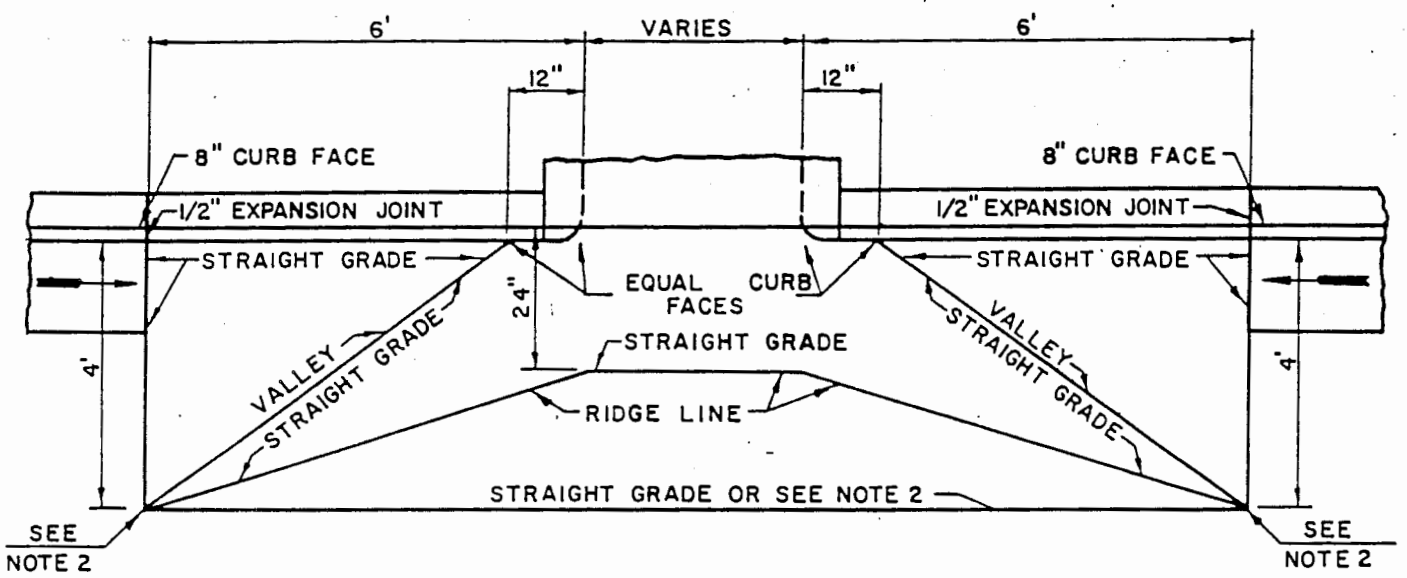

TYPE B

NOTES:

1. LOCAL DEPRESSION SHALL BE CONSTRUCTED OF CLASS B CONCRETE 8" THICK.
2. ELEVATIONS SHALL BE SHOWN ON CONSTRUCTION PLANS. THE OUTER EDGE OF THE LOCAL DEPRESSION SHALL CONFORM TO FINISHED STREET SURFACE.
3. SPECIAL DETAILS GOVERNING THE CONSTRUCTION ON A VERTICAL CURVE SHALL BE SHOWN ON CONSTRUCTION PLANS.

SAN BERNARDINO COUNTY ROAD DEPARTMENT			
DATE: J.V.C. 4-85 R.O. 8-89	KEN A. MILLER DIRECTOR OF TRANSPORTATION	LOCAL DEPRESSION	203 B

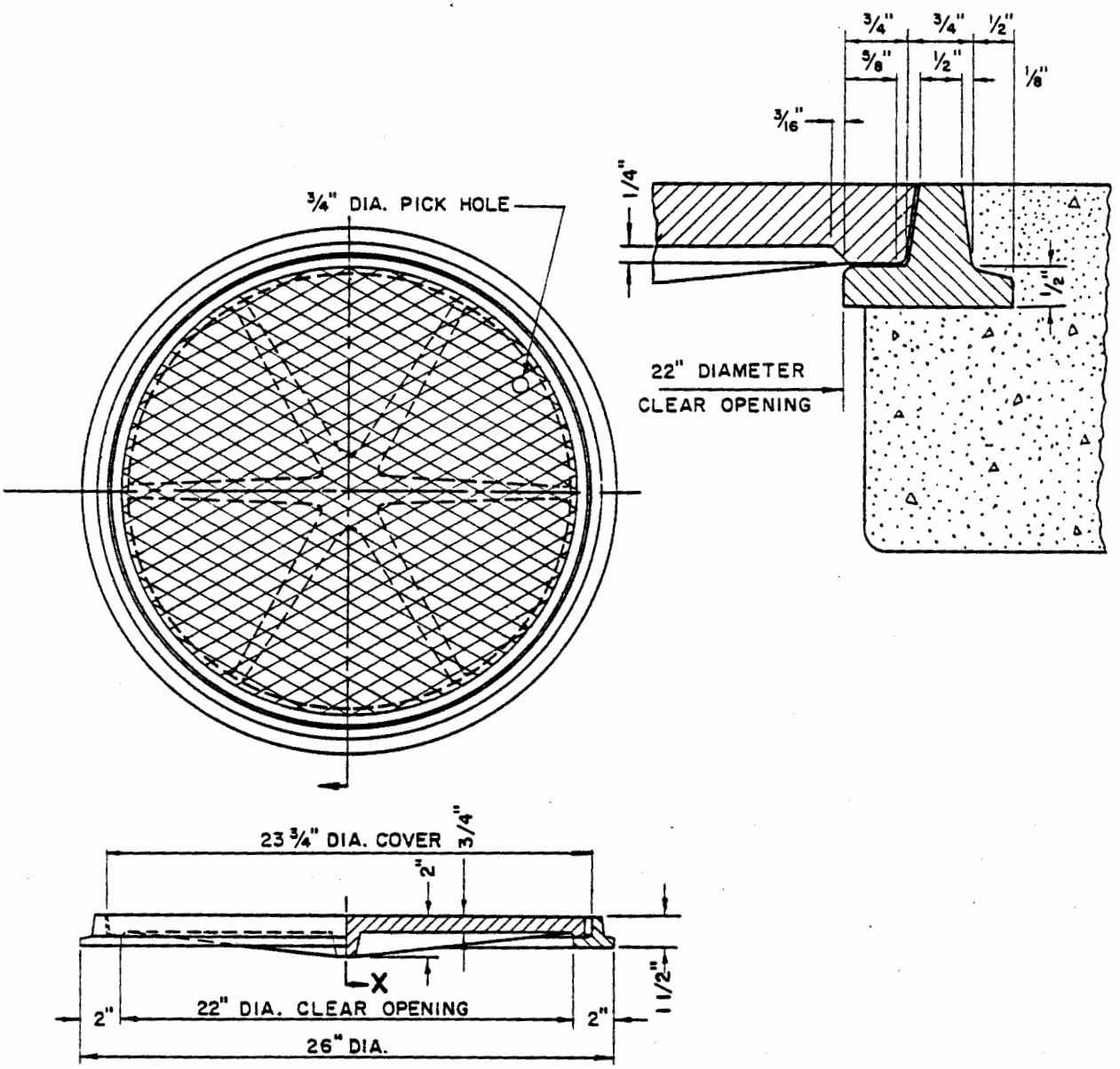

MATERIAL: CAST IRON (ASPHALT COATED OR GALVANIZED)

NOTES

1. SEATS OF FRAME AND COVER SHALL BE MACHINED TO PREVENT NOISE.
2. TOTAL WEIGHT OF FRAME AND COVER APPROX. 130 LBS.
3. MINIMUM CLEAR OPENING 22" DIAMETER. ALL OTHER DIMENSIONS ARE NOMINAL.

ALHAMBRA A-1530 OR EQUIVALENT

SAN BERNARDINO COUNTY ROAD DEPARTMENT		MANHOLE FRAME & COVER - PARKWAY	204
DATE: F.V.C. 7-65 W.L.F. 7-74	John R. Shone COUNTY HIGHWAY ENGINEER		

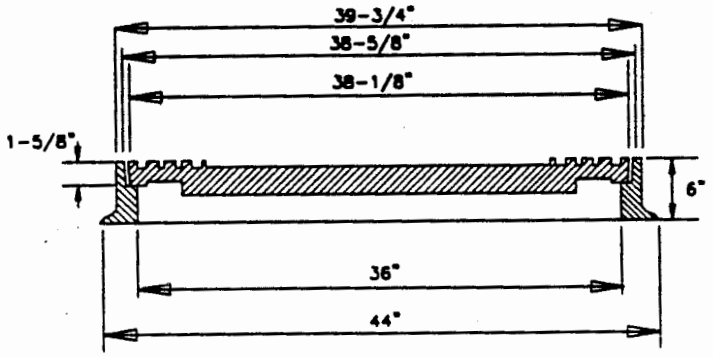

SECTION

FRAME AND COVER

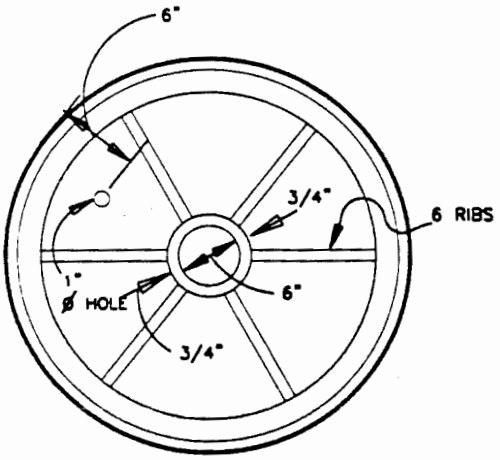

BOTTOM VIEW

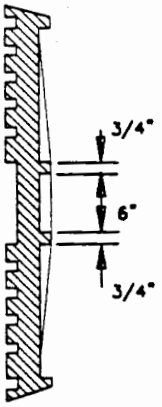

SECTION

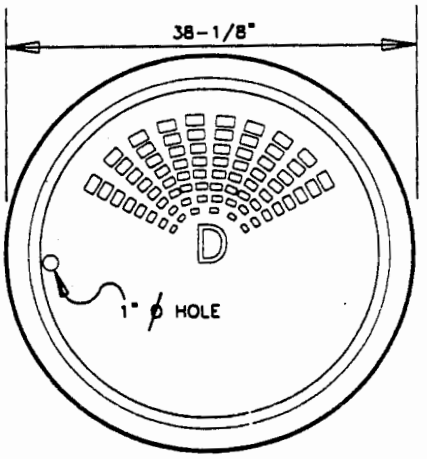

PLAN

COVER

NOTES:

1. SEATS OF FRAME AND COVER SHALL BE MACHINED TO PREVENT NOISE.
2. TOTAL WEIGHT OF FRAME AND COVERS - 580 lbs MIN.
3. MATERIAL: CAST IRON (BITUMINOUS COATED).
4. SURFACE OF LETTERS SHALL BE FLUSH WITH FINISHED SURFACE OF COVER

SAN BERNARDINO COUNTY TRANS. DEPT.	KEN A. MILLER Director of Transportation	36" MANHOLE FRAME & COVER	205

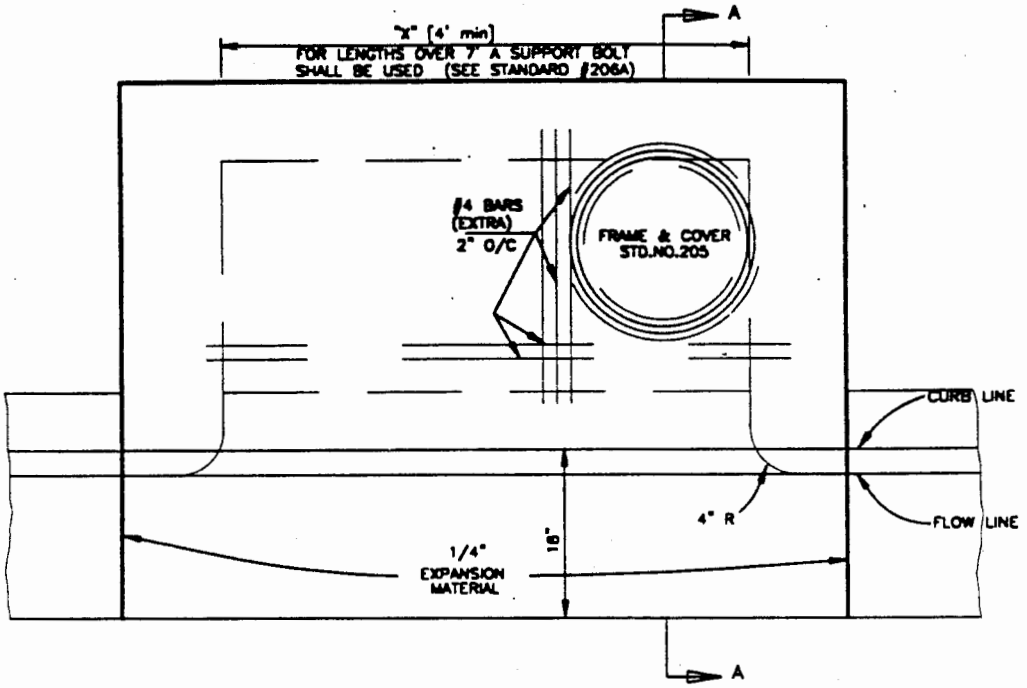

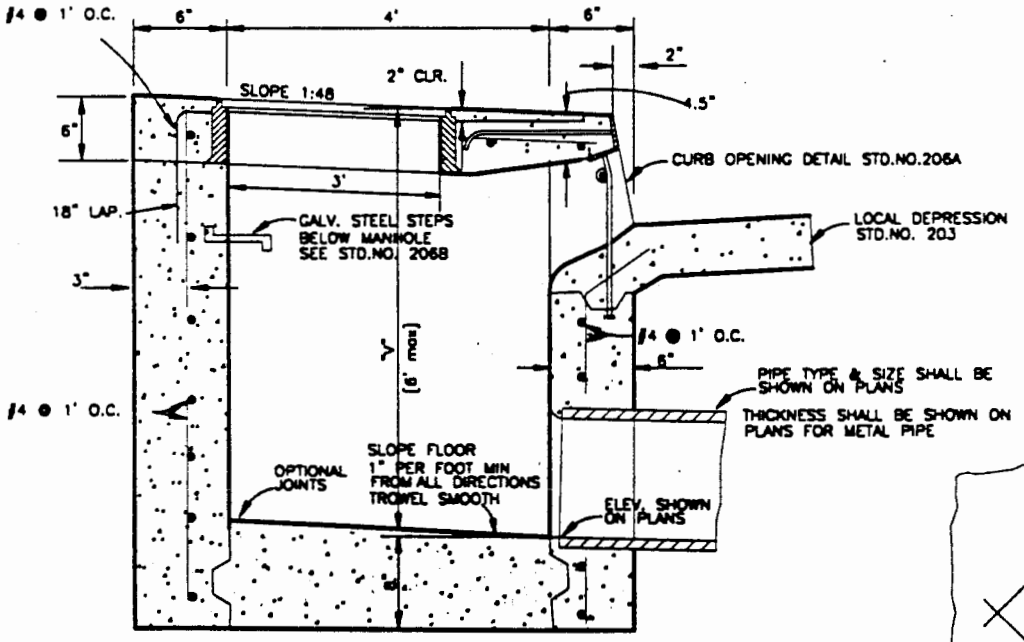

SECTION A-A

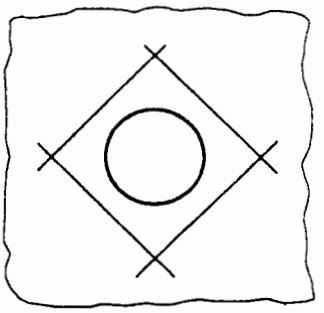

DETAIL OF REINFORCEMENT AROUND PIPE

NOT TO SCALE

NOTES:

1. ALL REINFORCING SHALL BE #4 BARS @ 1' O.C. BOTH WAYS IN TOP SLAB AND WALLS.
2. CATCH BASIN SHALL BE CONSTRUCTED OF CLASS "A" CONCRETE.
3. CURB & GUTTER ADJOINING CATCH BASIN SHALL BE CONSTRUCTED PRIOR TO CONSTRUCTING TOP OF CATCH BASIN.

SAN BERNARDINO COUNTY TRANS. DEPT.	KEN A. MILLER Director of Transportation	TYPE "A" CATCH BASIN	206

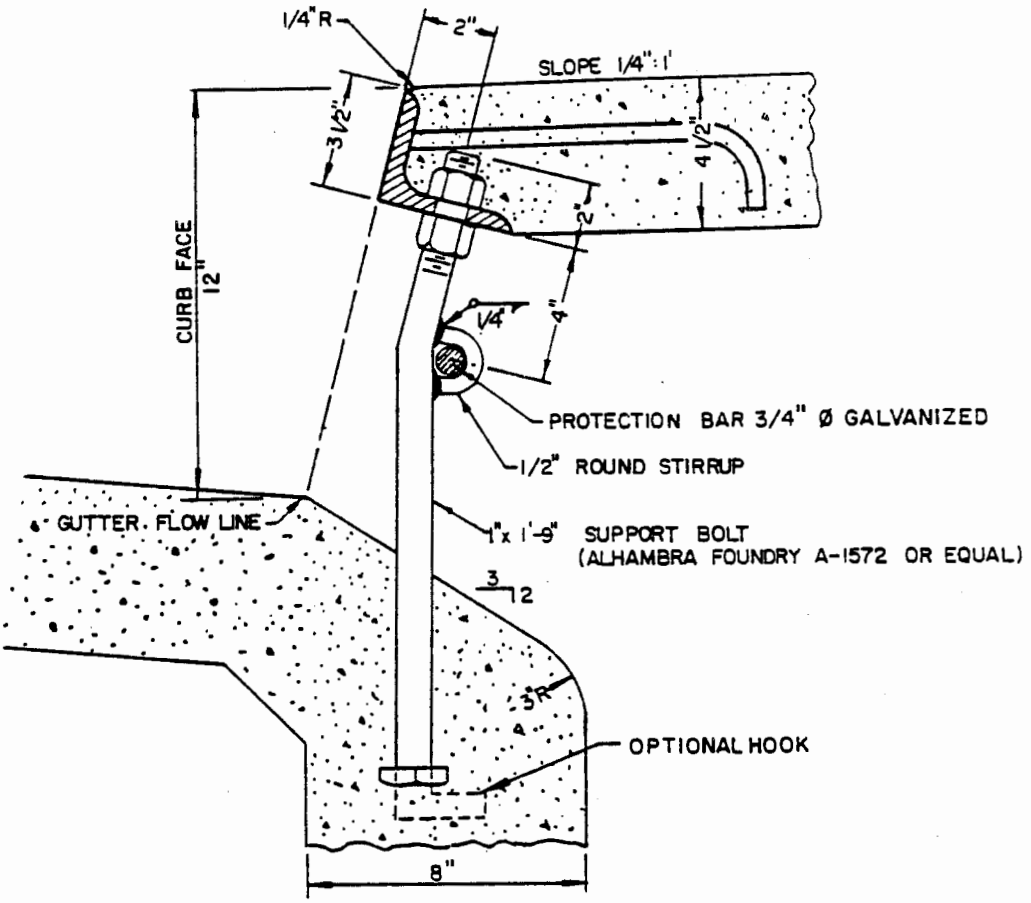

STEEL ANGLE & SUPPORT BOLT DETAIL

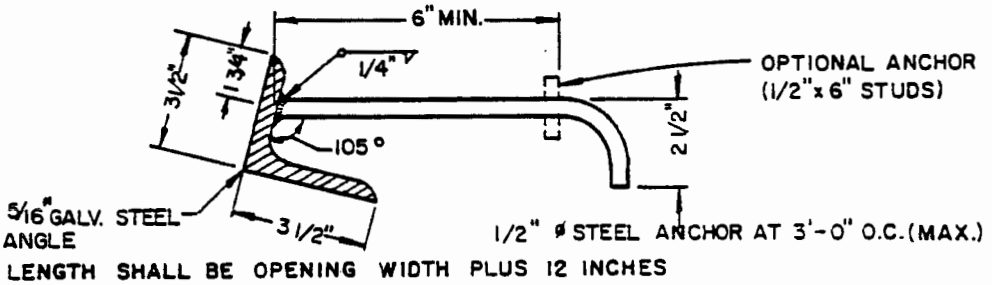

LENGTH SHALL BE OPENING WIDTH PLUS 12 INCHES

STEEL ANGLE ANCHOR

NOTES:

1. A PLAIN ROUND GALVANIZED STEEL PROTECTION BAR 3/4" IN DIA. SHALL BE INSTALLED AND EMBEDED 6" AT EACH END.
2. ALL EXPOSED METAL PARTS SHALL BE GALVANIZED. (EXCEPT FRAME AND COVER)
3. SUPPORT BOLTS SHALL BE UNIFORMLY SPACED BUT NOT TO EXCEED 7' ON CENTER.
4. STEEL ANGLE SHALL BE BENT TO MATCH CURB ALIGNMENT.

SAN BERNARDINO COUNTY TRANS. DEPT.		CATCH BASIN OPENING	206a
L. J. F. 12-74	John R. Shone Director of Transportation		

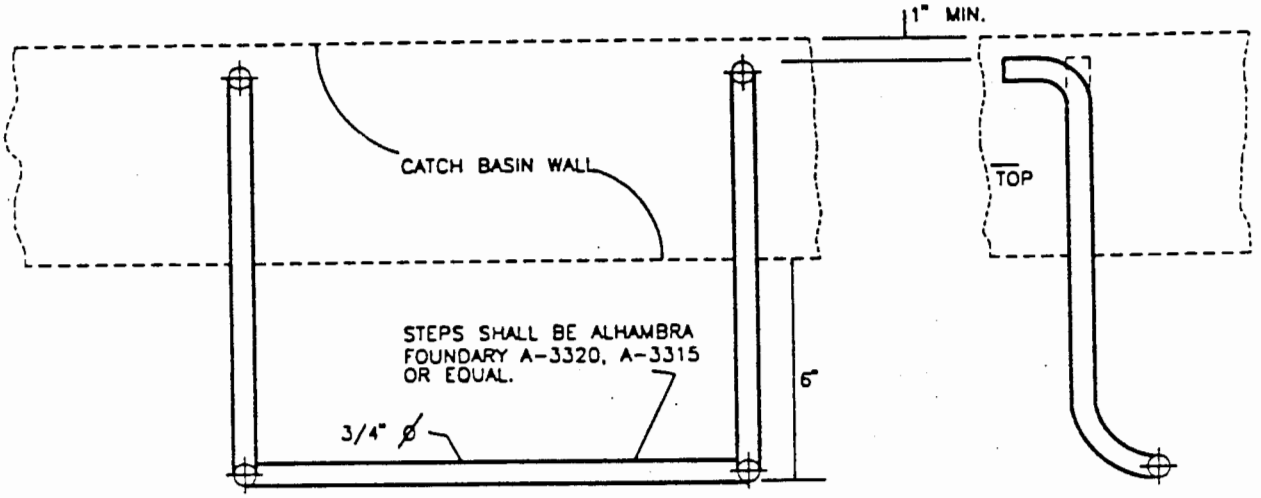

NOTES:

1. STEPS – NONE REQUIRED WHERE "V" IS 3'-6" OR LESS. INSTALL ONE STEP 16"± ABOVE FLOOR WHEN "V" IS MORE THAN 3'-6" & LESS THAN 5'-0". WHERE "V" IS MORE THAN 5'0" STEPS SHALL BE EVENLY SPACED @ 12"± INTERVALS FROM 16"± ABOVE THE FLOOR TO WITHIN 12"± FROM THE TOP OF THE BOX. PLACE STEPS IN WALL WITHOUT PIPE OPENINGS AND UNDER MANHOLE.

SAN BERNARDINO COUNTY TRANS. DEPT.		
KEN A. MILLER Director of Transportation	GALVANIZED STEEL STEP	206B

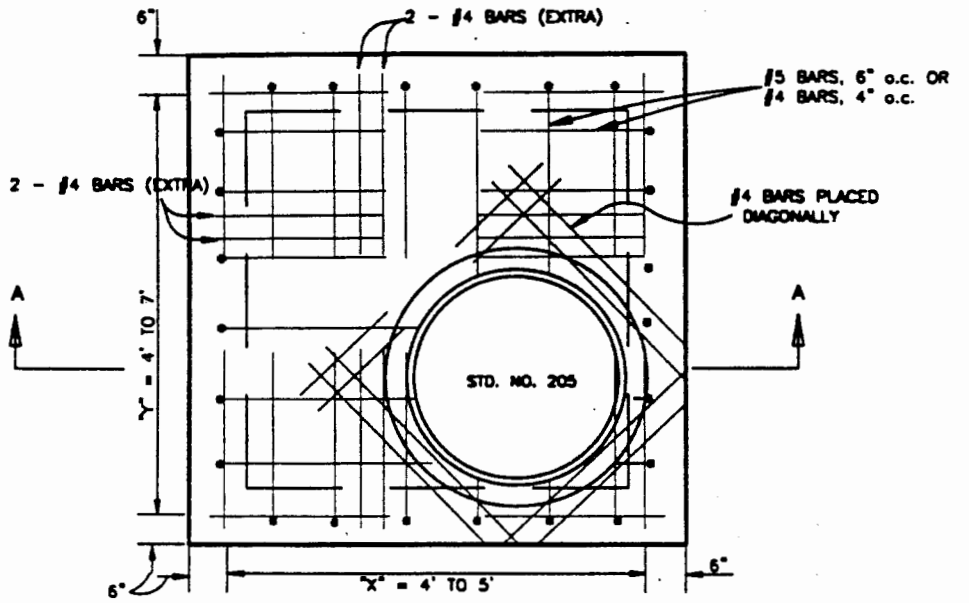

"X": SHOWN ON PLANS.
"Y": SHOWN ON PLANS.
"V": SHOWN ON PLANS.

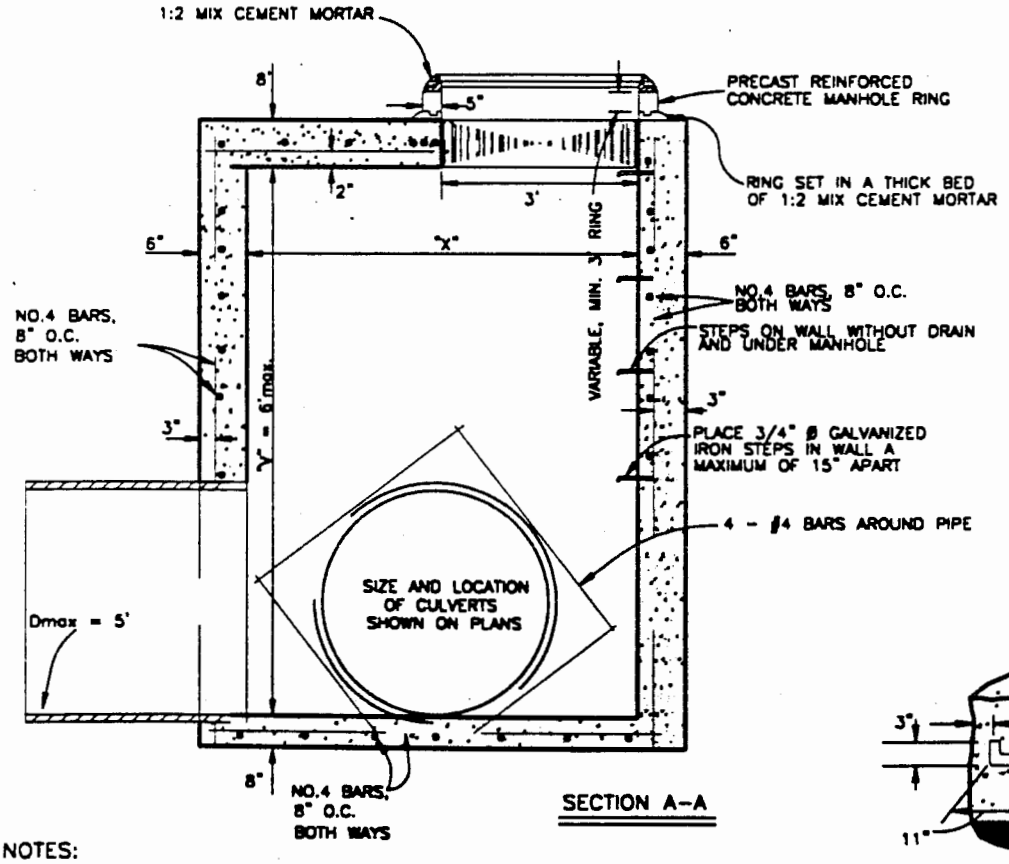

SECTION A-A

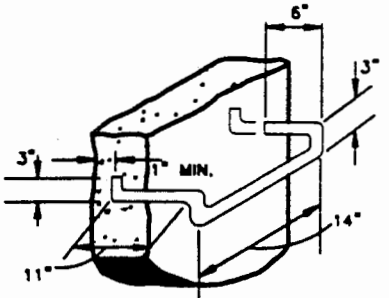

STEP DETAIL

NOTES:

1. STORM DRAIN CLEANOUT SHALL BE CONSTRUCTED OF CLASS "A" CONCRETE.
2. CLEARANCE FROM I.D. OF PIPE TO CLEANOUT WALL SHALL BE 4" MIN.
3. APPROVED PRECAST CONCRETE MANHOLE SHAFT RINGS WILL BE ACCEPTED IN LIEU OF CAST-IN-PLACE SHAFT

SAN BERNARDINO COUNTY TRANS. DEPT.			
	KEN A. MILLER Director of Transportation	STORM DRAIN CLEANOUT	208

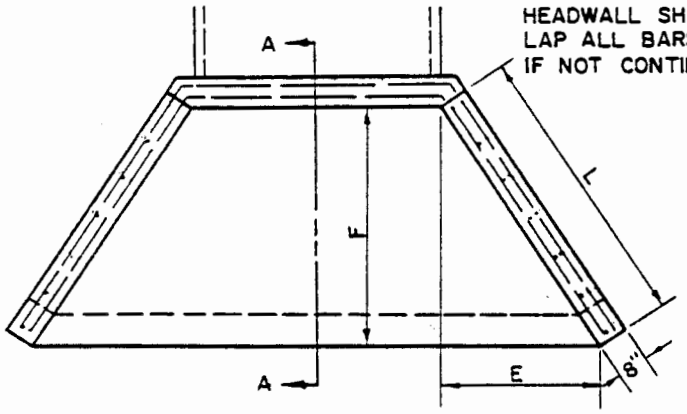

PLAN

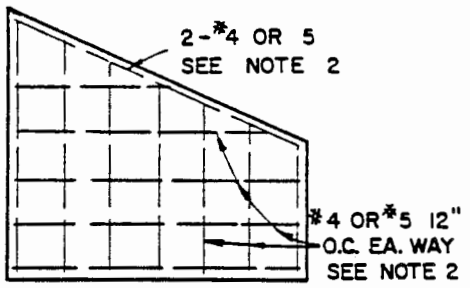

REINFORCING DETAIL

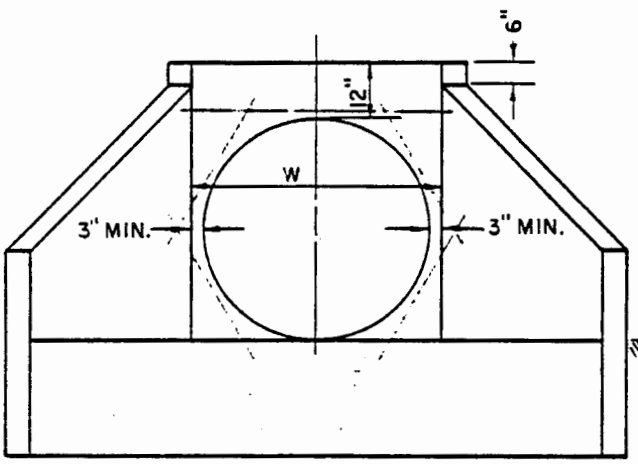

ELEVATION

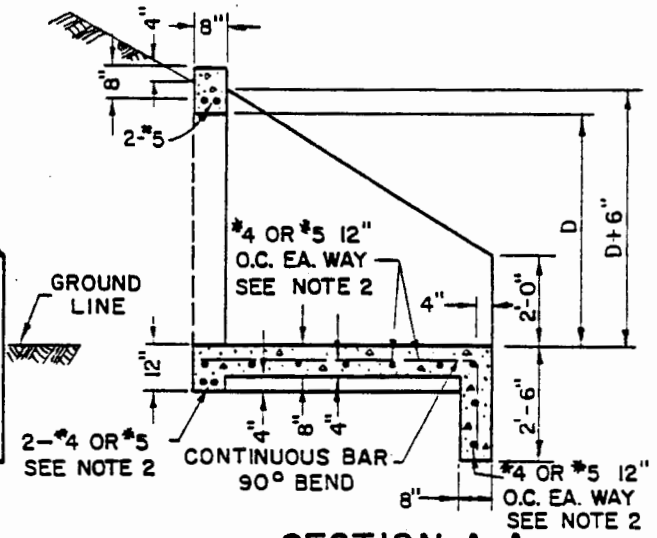

SECTION A-A

DIMENSIONS				
PIPE DIAM.	L	E	F	W
24"	4'-9"	2'-8"	4'-0"	2'-6"
30"	5'-5"	3'-0"	4'-6"	3'-0"
36"	6'-0"	3'-4"	5'-0"	3'-8"
42"	6'-7"	3'-8"	5'-6"	4'-2"
48"	7'-3"	4'-0"	6'-0"	4'-10"
54"	8'-2"	4'-6"	6'-9"	5'-4"

NOTES:

1. HEADWALL SHALL BE CONSTRUCTED OF CLASS A CONCRETE.
2. REINFORCING STEEL SHALL BE NO. 4 BARS FOR "W" UP TO 60". ABOVE "W"=60" NO. 5 BARS SHALL BE USED. 2" MIN CLEARANCE, 30 DIAMETER LAP, ALL STEEL.
3. ADJACENT SLOPES SHALL BE 1½ TO 1 OR FLATTER.
4. MULTIPLE PIPES TO BE SET WITH LONGITUDINAL CENTERS 1 2/3 DIAMETERS APART.
5. ALL EXPOSED CORNERS TO BE ROUNDED 3/4" RADIUS.
6. W SHALL BE INCREASED WHEN MULTIPLE PIPES OR PIPES ON SKEW ARE USED.

SAN BERNARDINO COUNTY ROAD DEPARTMENT			
DATE: J.V.C. 7-65	*M. A. Nicholas* COUNTY ENGINEER	HEADWALL WING - TYPE	209

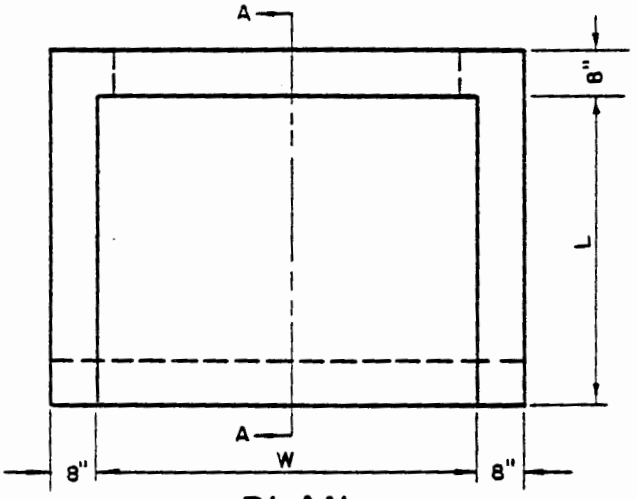

PLAN

DIMENSIONS		
PIPE DIAM.	L	W
24"	4'-0"	2'-6"
30"	4'-6"	3'-0"
36"	5'-0"	3'-8"
42"	5'-6"	4'-2"
48"	6'-0"	4'-10"
54"	6'-9"	5'-4"

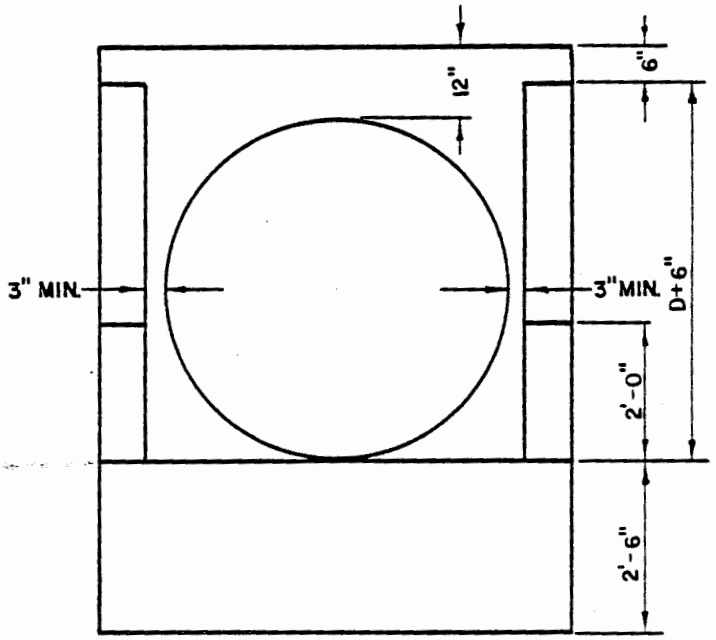

ELEVATION

NOTES:

1. REINFORCING STEEL IN WALLS AND BASE SHALL BE THE SAME AS STD. NO. 209.
2. NOTES SHALL BE THE SAME AS STD. NO. 209.
3. SECTION A-A IS THE SAME AS STD. NO. 209.

SAN BERNARDINO COUNTY ROAD DEPARTMENT		HEADWALL 'U'-TYPE	209A
DATE: J.V.C. 7-65	*M. A. Nicholas* COUNTY ENGINEER		

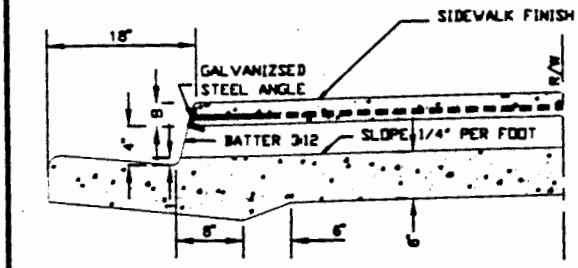

SECTION A – A

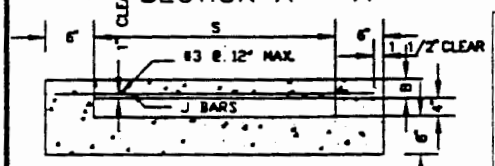

SECTION B – B

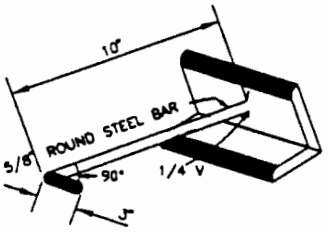

DETAIL OF ANCHOR
(SEE NOTES 5 & 7)

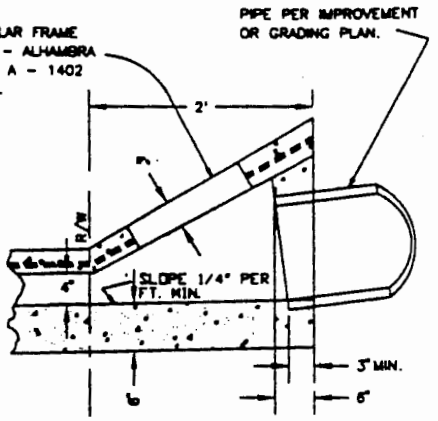

SECTION – INLET TYPE I

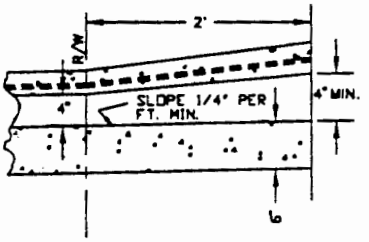

SECTION – INLET TYPE II

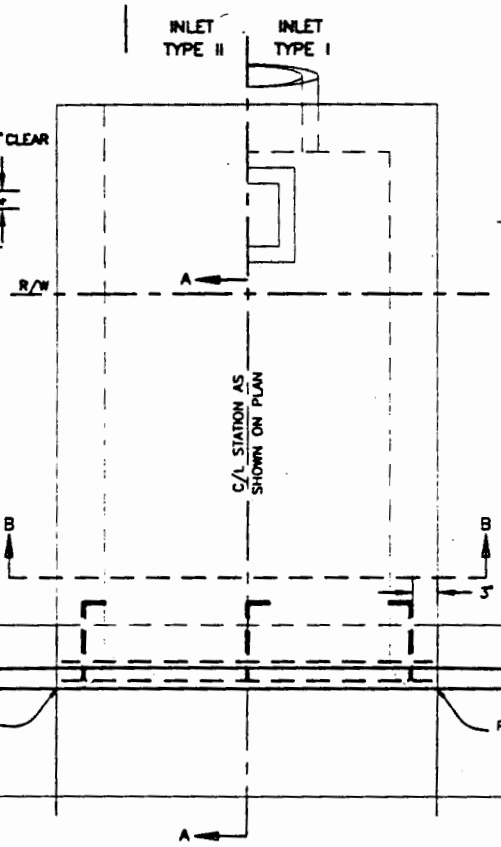

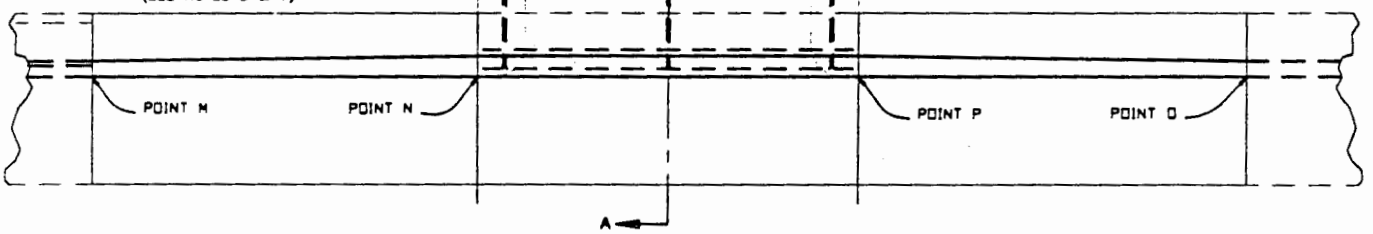

PLAN

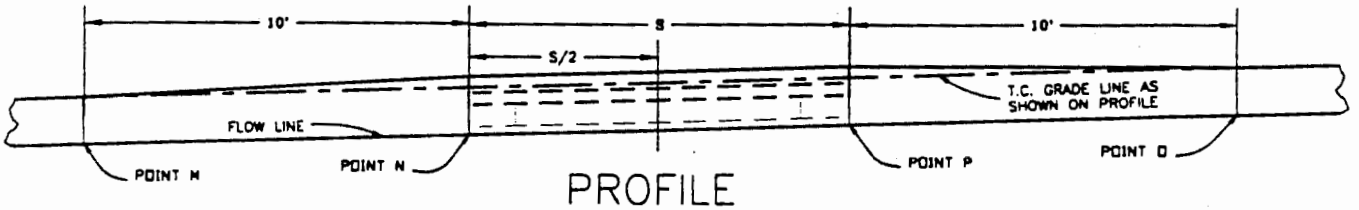

PROFILE

NOTES:

1. FLOOR OF BOX TO BE TROWELED SMOOTH.
2. WHEN THE TOE OF SLOPE IS WITHIN THE R/W, INLET TYPE I BEGINS AT THE TOE, RATHER THAN AT THE R/W LINE.
3. FOR OPEN DITCH APPROACH (TYPE II) THE 2' OR MORE IS FROM THE R/W LINE.
4. TOP OF INLET STRUCTURE (TYPE I OR II) TO BE FLUSH WITH ADJACENT SIDEWALK WHERE PRACTICAL.
5. A HEADED STEEL STUD 5/8" X 6 3/8" WITH HEAD 0.1" ATTACHED BY A FULL PENETRATION BUTT WELD MAY BE USED AS AN ALTERNATE ANCHOR.
6. NORMAL CURB AT POINTS M AND O. B + 5" AT POINTS N AND P.
7. THE 3" LEG OF THE INTERIOR ANCHORS SHALL BE PARALLEL TO THE TOP OF SIDEWALK.

S	B	GALVANIZED STEEL ANGLE	ANCHOR	J BAR		
				SIZE	SPACING	LENGTH
1'-0"	3"	2 1/2" X 2" X 3/8"	2	#3	7"	1'-9"
1'-6"	"	"	"	"	"	2'-3"
2'-0"	"	"	"	"	"	2'-9"
2'-6"	"	"	"	"	"	3'-3"
3'-0"	"	"	3	"	"	3'-9"
3'-6"	"	"	"	"	6"	4'-3"
4'-0"	"	"	"	"	5"	4'-9"
4'-6"	4"	3 1/2" X 3" X 1/2"	"	"	6 1/2"	5'-3"
5'-0"	"	"	"	"	5"	5'-9"
5'-6"	"	"	"	"	4"	6'-3"
6'-0"	"	"	"	"	3 1/2"	6'-9"

STDS\210

01/31/95

SAN BERNARDINO COUNTY TRANS. DEPT.

KEN A. MILLER
Director of Transportation

CURB OUTLET STRUCTURE

210

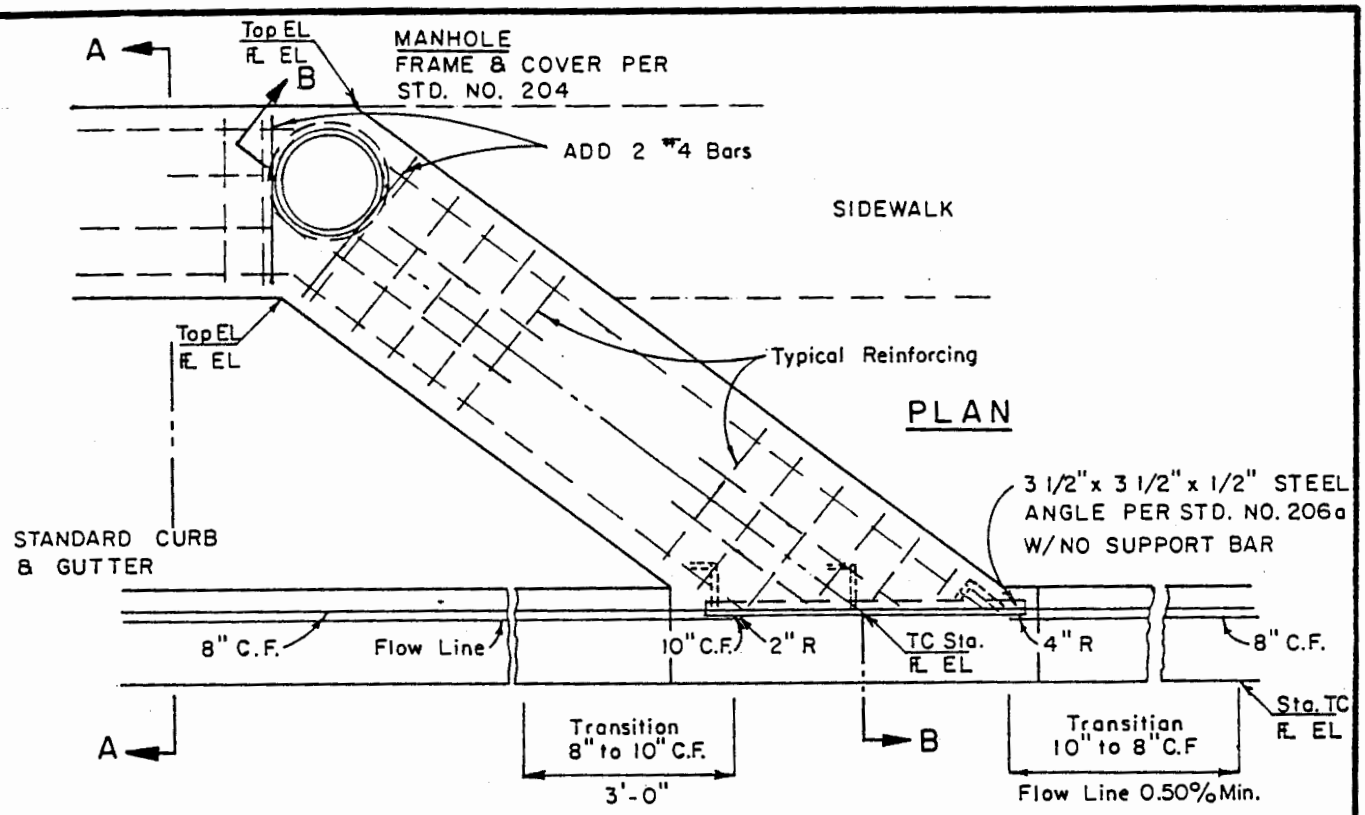

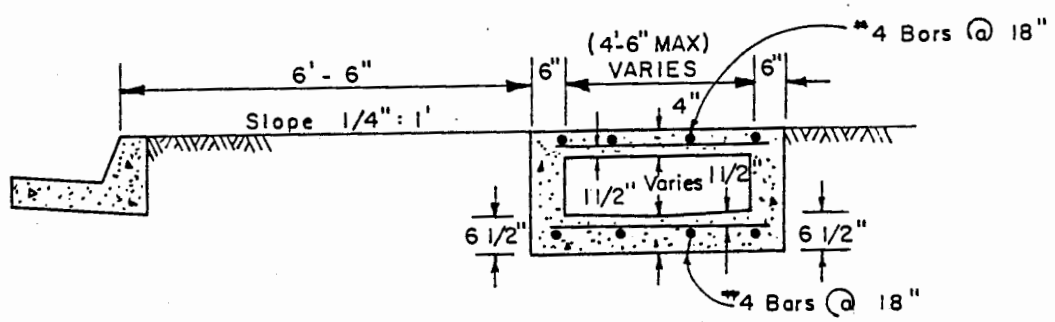

SECTION A-A

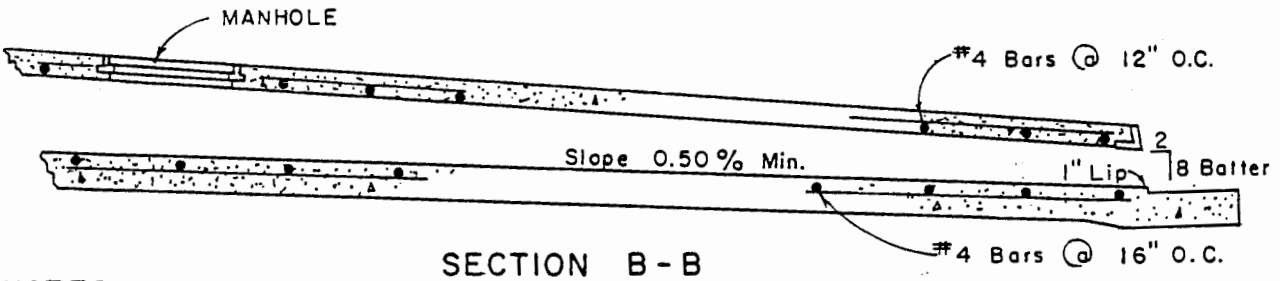

SECTION B-B

NOTES:

1. CONCRETE SHALL BE CLASS "A"
2. FLOOR OF STRUCTURE SHALL BE GIVEN A STEEL TROWEL FINISH.
3. TOP OF BOX TO HAVE SIDEWALK FINISH.
4. ANCHORS SHALL BE SYMMETRICALLY SPACED AND NOT TO EXCEED 4' BETWEEN CENTERS, AND BE PLACED 4 1/2" FROM EACH END OF THE STEEL ANGLE, A MINIMUM OF 3 ANCHORS IS REQUIRED.

SAN BERNARDINO COUNTY TRANS. DEPT. RO 8-89	KEN A. MILLER Director of Transportation	OUTLET STRUCTURE	210A

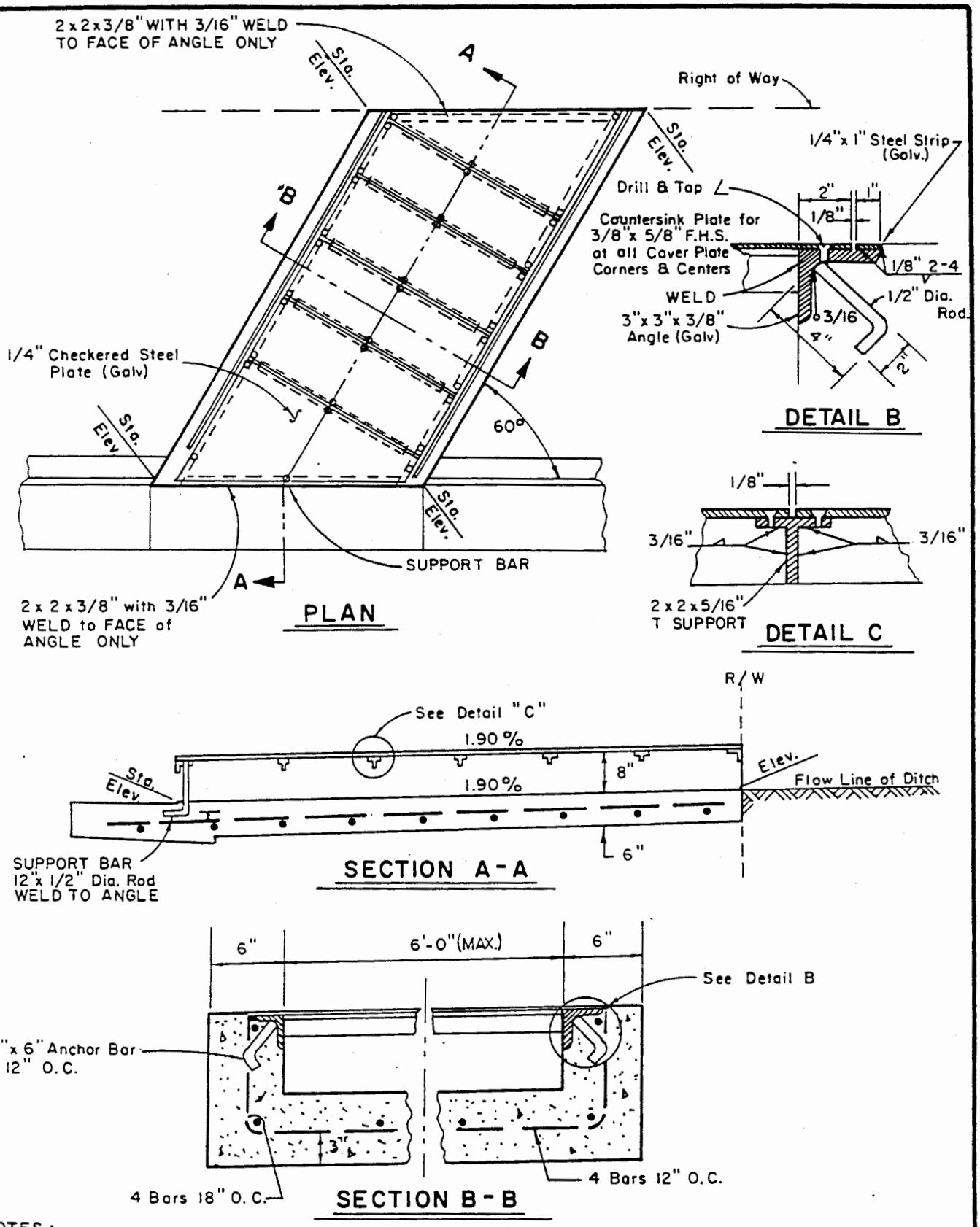

NOTES :

1. ALL CONCRETE TO BE CLASS "A"
2. ALL STEEL EXCEPT REINFORCING BARS SHALL BE GALVANIZED AFTER FABRICATION.

SAN BERNARDINO CO. TRANS. DEPT.		PARKWAY CULVERT W / STEEL PLATE COVER	211
RO 8-89	KEN A. MILLER Director of Transportation		

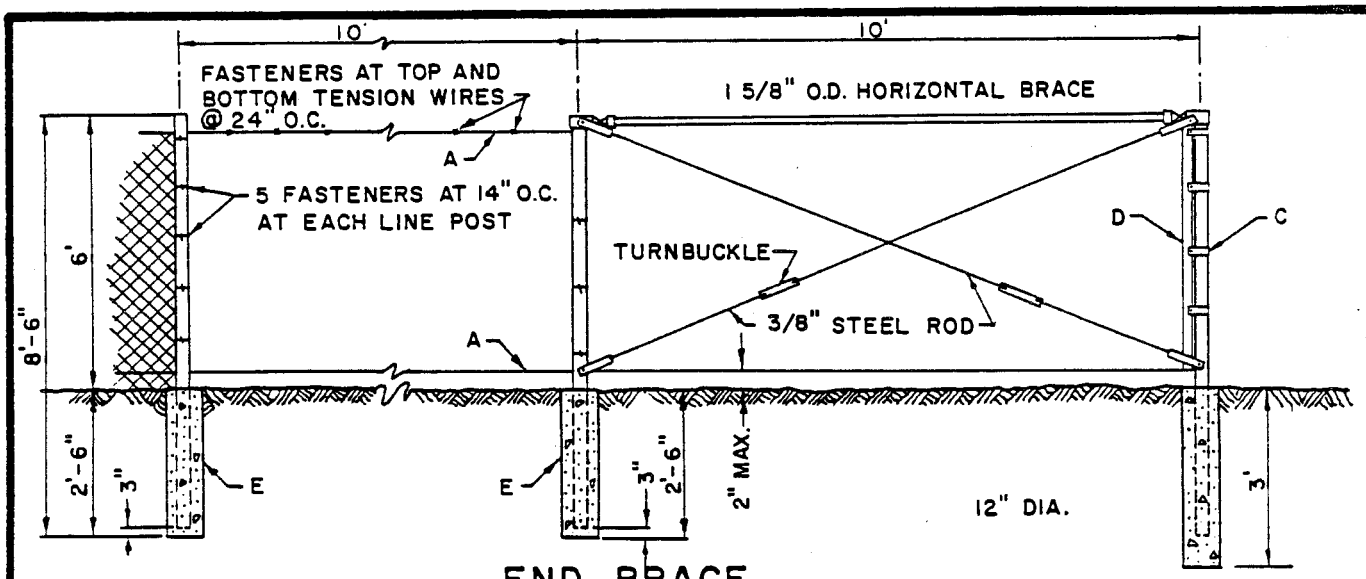

END BRACE

A-TENSION WIRE NUMBER 10 GAGE MINIMUM
B-CHAIN LINK FENCE FABRIC NUMBER 9 GAGE MINIMUM
C-1/8" X 1" BAND AT 1' INTERVAL
D-3/16" X 3/4" X 6' STEEL TENSION BAR
E-9" DIA.

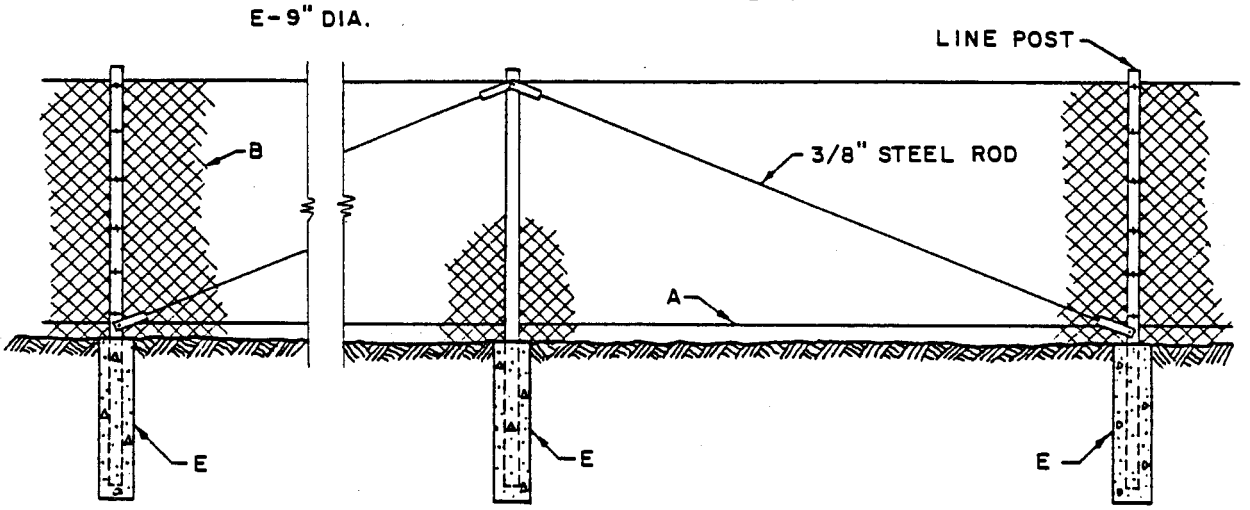

BRACE EVERY 500'

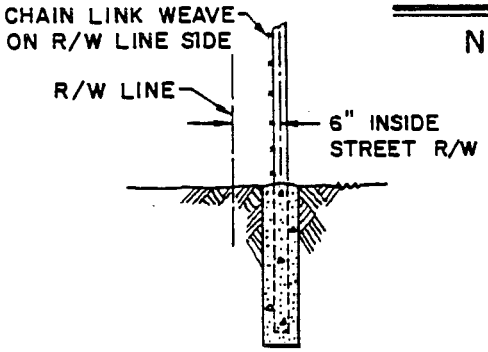

DETAIL

NOTES:

1. EACH POST SHALL BE CAPPED WITH A MALLEABLE IRON POST CAP, EXCEPT WHERE BARBED WIRE IS TO BE USED. THEN EACH POST SHALL BE CAPPED WITH A GALVANIZED MALLEABLE IRON 3 STRAND BARBED WIRE ARM & CAP.
2. MATERIALS AND CONSTRUCTION OF FENCE SHALL CONFORM TO STATE OF CALIFORNIA, STANDARD SPECIFICATIONS, UNLESS SHOWN OTHERWISE.

SAN BERNARDINO COUNTY ROAD DEPARTMENT		RIGHT OF WAY FENCE	300
DATE: F.V.C. 7-65	*M. A. Nicholas* COUNTY ENGINEER		

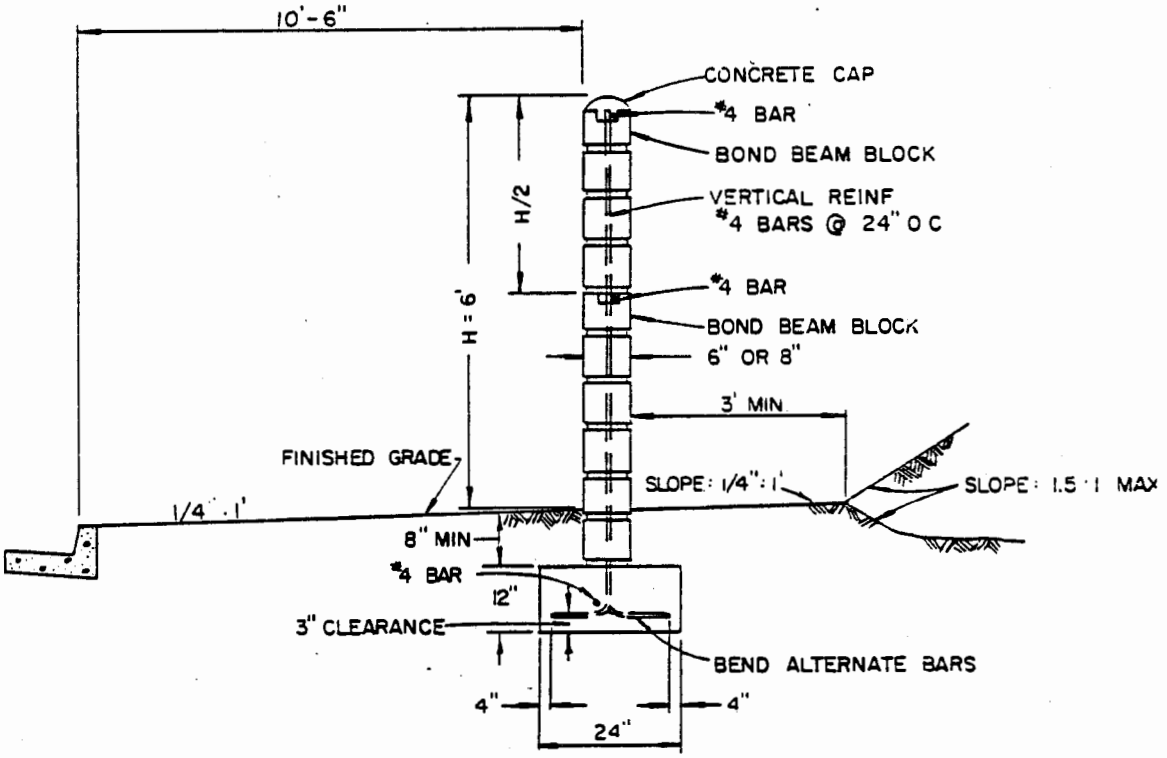

1. ALL VERTICAL CELLS CONTAINING REINFORCING STEEL SHALL BE FILLED WITH GROUT. IN ADDITION, WHERE 6" BLOCKS ARE USED ALL CELLS WITHOUT VERTICAL REINFORCING STEEL SHALL BE FILLED WITH GROUT TO TOP OF BOND BEAM AT MIDHEIGHT OF WALL.
2. THE BLOCK WALL COURSES AND FOOTINGS MAY BE BUILT PARALLEL WITH THE STREET GRADE (7% MAX.) OR STEPPED.
3. ALL WALLS SHALL BE PLUMB.
4. BACKFILL SHALL BE COMPACTED TO A MINIMUM OF 90%
5. FOOTING SHALL BE CLASS B CONCRETE.
6. CONCRETE BLOCK SHALL BE GRADE A UNITS, CONFORMING TO ASTM DESIGNATION NO. C90
7. REINFORCING STEEL, GROUT MORTAR, AND CLASS B CONCRETE SHALL CONFORM TO THE STANDARD SPECIFICATIONS
8. ELIMINATE MORTAR IN ALL VERTICAL JOINTS IN FIRST COURSE ABOVE FINISH GRADE.
9. 1/2" OPEN JOINTS EXTENDING THROUGH THE ENTIRE HEIGHT OF THE BLOCK WALL, SHALL BE SPACED AT A MAXIUM OF 50'.
10. ELIMINATE MID-HEIGHT BOND BEAM IN WALLS WHERE H=4' OR LESS.

SAN BERNARDINO COUNTY TRANS. DEPARTMENT		NON RETAINING CONCRETE BLOCK WALL	301
Revised - MAY '73 APP. MAR. 1975	John R. Shone DIRECTOR OF TRANSPORTATION		

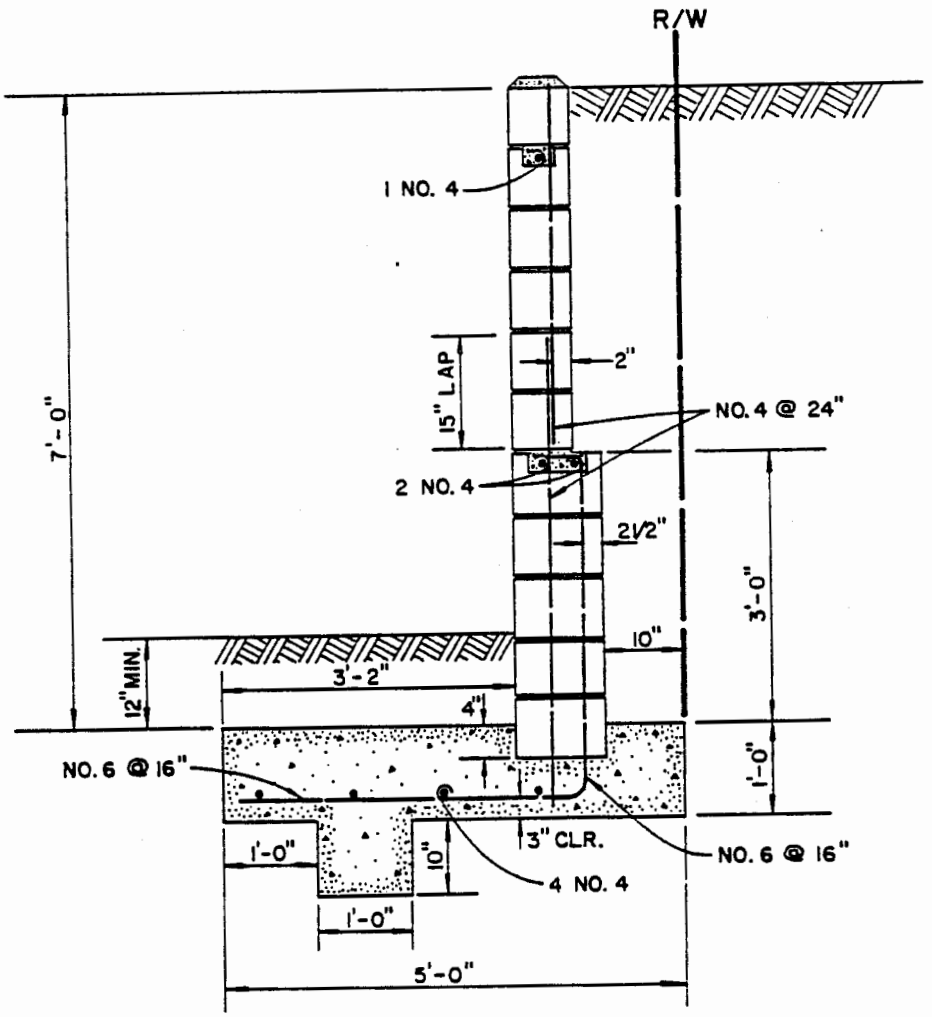

NOTES:

1. ALL VERTICAL CELLS CONTAINING BAR STEEL SHALL BE FILLED WITH GROUT.
2. TOP OF WALL AND FOOTINGS SHALL BE STEPPED TO CONFORM WITH SLOPE OF GROUND.
3. ALL WALLS SHALL BE PLUMB AND ALL BLOCK COURSES SHALL BE LEVEL.
4. BACKFILL SHALL BE COMPACTED TO A MINIMUM OF 90% OF MAXIMUM DENSITY.
5. FOOTING SHALL BE CLASS 'A' CONCRETE.
6. CONCRETE BLOCK SHALL BE GRADE A UNITS, CONFORMING TO A.S.T.M. DESIGNATION NO. C90.
7. REINFORCING STEEL, GROUT, MORTAR AND CLASS 'A' CONCRETE SHALL CONFORM TO THE STANDARD SPECIFICATIONS. LAP STEEL 20 DIAMETERS.
8. MORTAR TO BE ELIMINATED FROM VERTICAL JOINTS OF ROW OF BLOCKS AT PARKWAY LEVEL.
9. THIS WALL SHALL BE USED WHERE A SCREENING WALL IS REQUIRED ON NON-ACCESS STREET AND THE POSSIBILITY OF BACKFILL ON PRIVATE LOT BY OWNER IS ACCOMPLISHED OR POSSIBLE.
10. DESIGN OF RETAINING WALLS UNDER OTHER CONDITIONS SHALL BE SUBMITTED TO THE COUNTY ENGINEER FOR APPROVAL.

SAN BERNARDINO COUNTY ROAD DEPARTMENT		RETAINING CONCRETE BLOCK WALL	301 a
DATE: J.E.M. 7-66	*M. A. Nicholas* COUNTY ENGINEER		

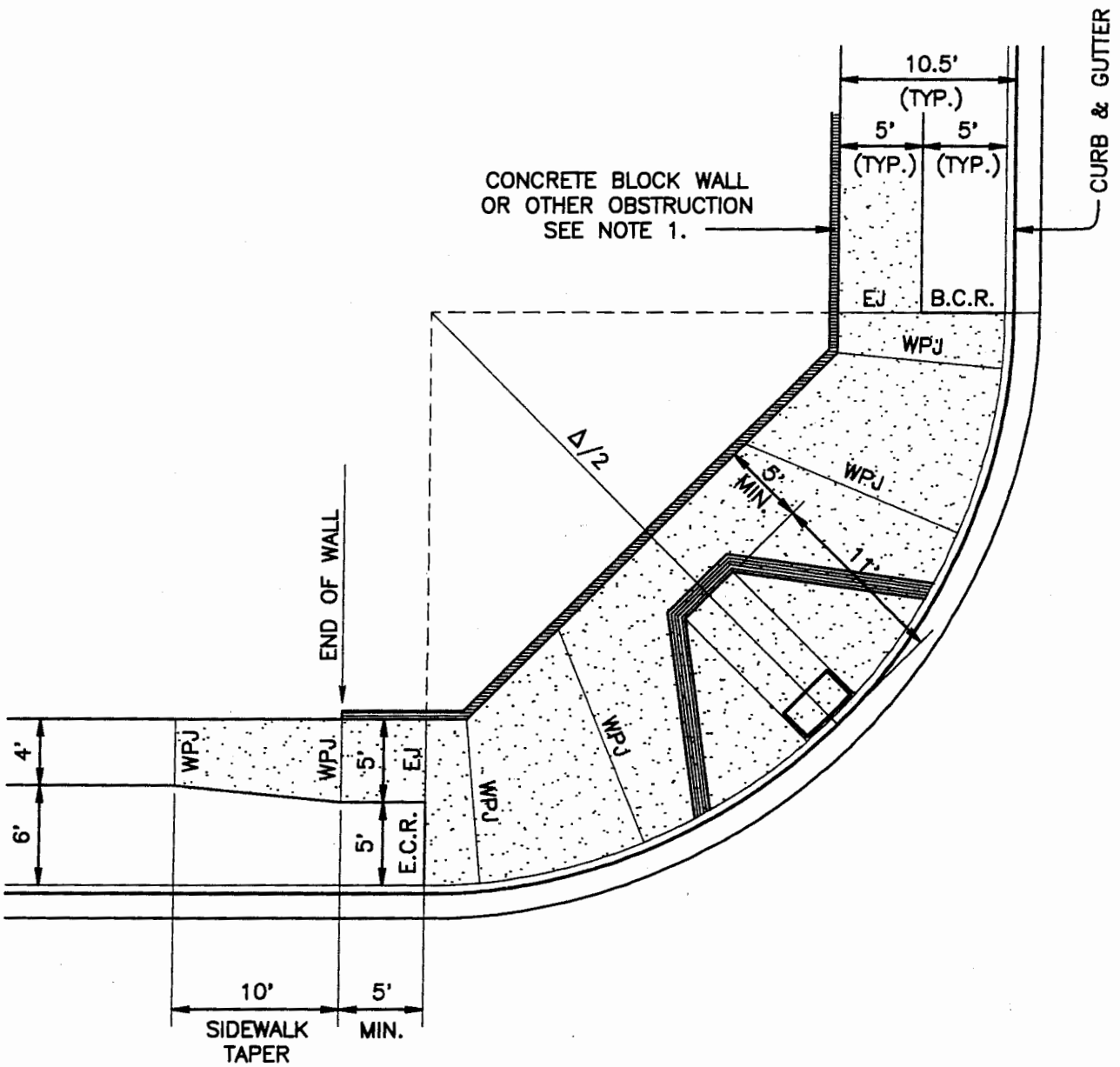

NOTES:

1. THE LOCATION & HEIGHT OF THE CONCRETE BLOCK WALL OR OTHER OBSTRUCTION MAY HAVE TO BE MODIFIED TO CONFORM TO THE REQUIREMENTS OF THE "CLEAR SIGHT TRIANGLE" AS SHOWN ON FIGURE 8-1 OF THE COUNTY PLANNING & DESIGN STANDARDS MANUAL.
2. THE SIDEWALK ADJACENT TO THE BLOCK WALL SHALL BE TYPE "A" PER COUNTY STD. 109
3. FOR RAMP & WEAKENED PLANE JOINT INFORMATION SEE CO. STD. 110.
4. REFER TO STREET IMPROVEMENT PLAN FOR RIGHT-OF-WAY LOCATION.

WPJ INDICATES WEAKENED PLANE JOINT.
EJ INDICATES 1/4" PREMOLDED EXPANSION JOINT MATERIAL.

SEE TERRAMODEL FILE - N:\ M2201\ MISCDET.pro

CO. OF SAN BDNO. DEPT. OF PUBLIC WORKS			
REVISED: DATE G.M. 12-05	PATRICK J. MEAD Director of Public Works	BLOCKWALL LOCATION AT INTERSECTION	302

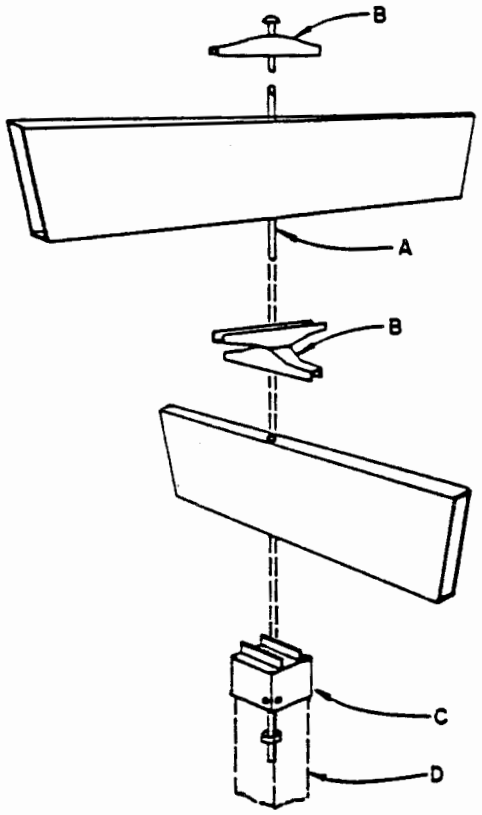

ASSEMBLY

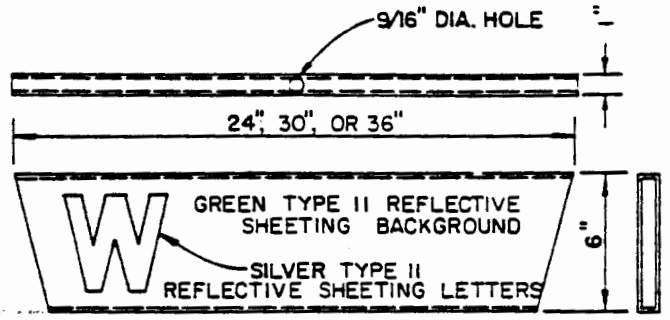

A $\frac{5}{8}$"X15" CADMIUM PLATED CARRIAGE BOLT.

B ORNAMENTAL TOP SHALL BE 14 GAGE ANODIZED ALUMINUM. CENTER CROSS SADDLE SHALL BE ONE PIECE CAST ANODIZED ALUMINUM.

C ONE PIECE 2" CAST ANODIZED ALUMINUM POST CAP WITH FOUR 3/8" STAINLESS STEEL ALLEN HEAD SET SCREWS.

D 2" SQ. STEEL POST 8'-12' LONG INSTALLED WITH A DRIVEN 2 1/2" SQ. STEEL BREAKAWAY BASE 3' LONG AS PER COUNTY INSTALLATION STD. 303b.

DESIGN: EACH FOUR-WAY UNIT SHALL CONSIST OF TWO DOUBLE FACE SIGNS WITH STREET NAMES MOUNTED AT RIGHT ANGLES WITH CENTER ROD ASSEMBLY.

BRACKET ASSEMBLY: THE POST CAP, ORNAMENT, AND CENTER ROD ASSEMBLY SHALL BE MADE TO MOUNT ON 2" SQ. GALVANIZED POST. THE CENTER ROD SHALL BE A $\frac{5}{8}$" CADMIUM PLATED CARRIAGE BOLT. HEAD OF BOLT SHALL FORM TOP OF ORNAMENT. BOLT SHALL EXTEND THROUGH SIGNS AND FASTEN WITH NUT INSIDE OF POST CAP. POST CAP SHALL BE DEEPLY GROOVED TO SECURELY HOLD SIGN FROM TWISTING AND SHALL BE SECURED TO THE PIPE WITH THREE 3/8" STAINLESS STEEL ALLEN HEAD SET SCREWS.

MATERIAL: SIGN SHALL BE GREEN ANODIZED ALUMINUM EXTRUSION OF 6063T-4 ALLOY MATERIAL. ALL ANODIZING SHALL CONFORM WITH ALUMILITE SPECIFICATION #215-R1.

FINISH: SIGN FACES SHALL BE FHWA TYPE II REFLECTIVE SHEETING. THE TRANSPARENT SCREEN PROCESS COLOR SHALL BE AS RECOMMENDED BY THE REFLECTIVE SHEETING MANUFACTURER. APPLICATION OF THE REFLECTIVE SHEETING TO THE SIGN SHALL BE BY METHODS AS APPROVED BY THE REFLECTIVE SHEETING MANUFACTURER.

LETTERING: STREET NAMES SHALL BE 4" HIGH. EACH NAME SHALL BE INDIVIDUALLY LAID OUT TO FIT EITHER THE 24" OR 30" SPACE. THE LETTERS SHALL BE OF THE ROUNDED TYPE STYLE CONFORMING WITH THE STANDARD ALPHABET FOR HIGHWAY SIGNS DESIGNED BY THE U.S. PUBLIC ROADS ADMINISTRATION. LETTERS SHALL BE FHWA TYPE II REFLECTIVE SHEETING.

SAN BERNARDINO COUNTY ROAD DEPARTMENT			
DATE: J.E.M. 11-65 R.A.J. 10-81	*M. A. Nicholas* COUNTY ENGINEER	STREET MARKER	303

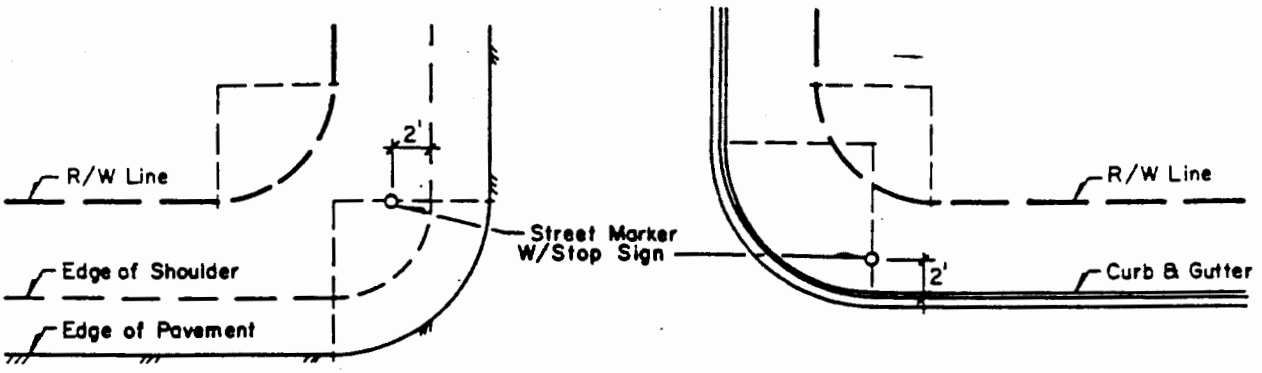

PLAN

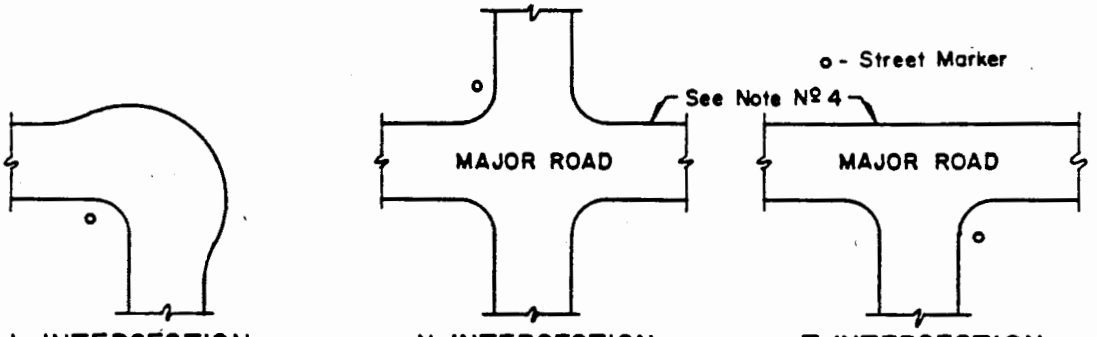

L INTERSECTION X INTERSECTION T INTERSECTION

TYPICAL LOCATION

NOTES:

1. Marker To Be Set On County Right Of Way.
2. Location Of Marker Shown Is Approximate.
3. Markers To Be Visible For A Distance Of 150 Feet.
4. If Either Road Is Divided Into 4 Lanes Or More (Major Road), Additional Markers Will Be Required.
5. Street Markers Located At Major Roads Will Be Mounted On 12 Foot Posts To Accommodate A Stop Sign.

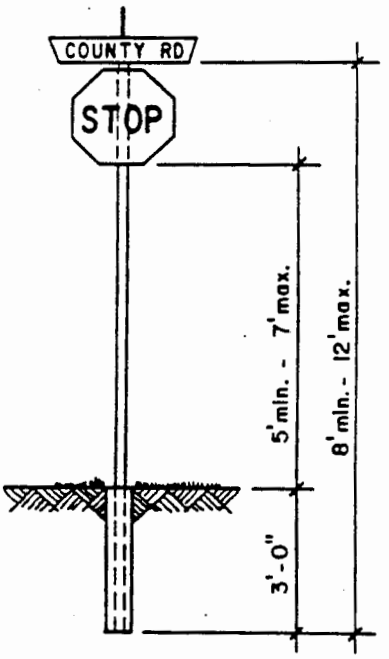

ELEVATION

SAN BERNARDINO COUNTY TRANS. DEPT.			
OCT. 5, 1993 v.h.c. REV. 3/1/94	KEN A. MILLER Director of Transportation	STREET MARKER	303a

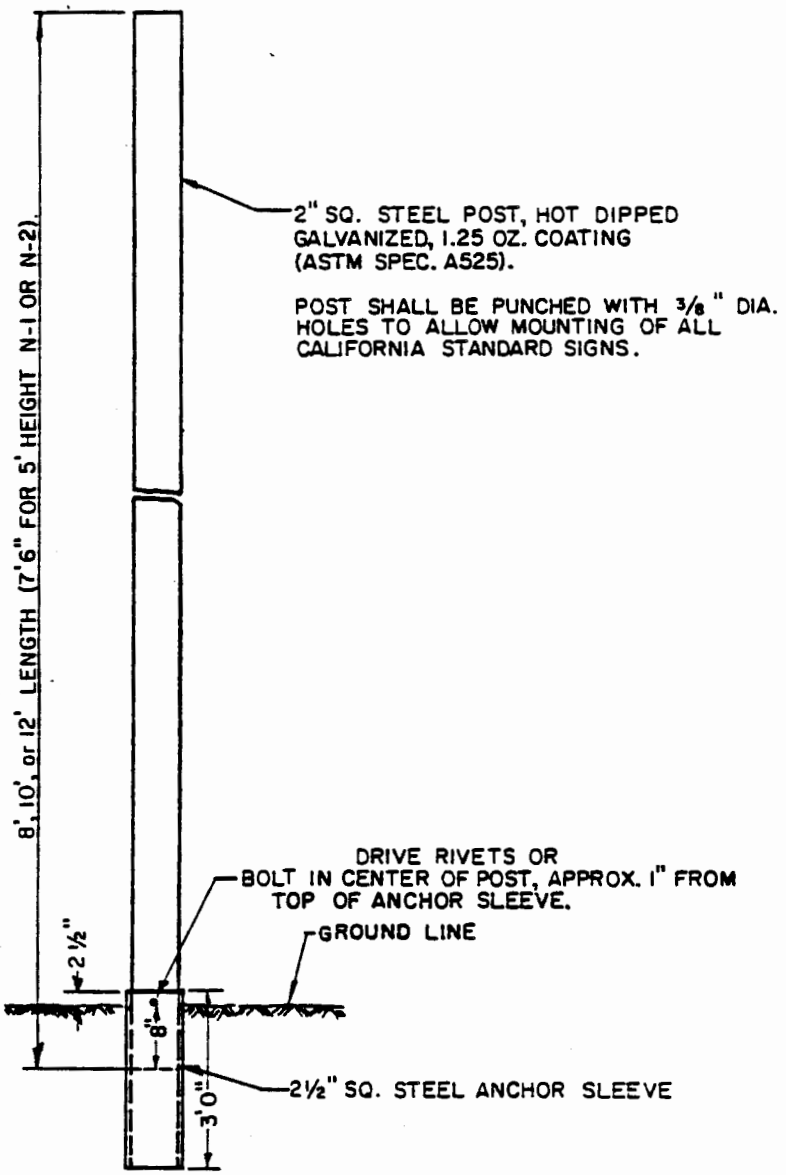

NOTES:

1. SEE STANDARD NO. 303a FOR MARKER LOCATIONS.
2. POST SHALL BE 2" SQ. STEEL AS SHOWN AND STATED.
3. ANCHOR SLEEVE SHALL BE 2½" SQ. STEEL HOT DIPPED GALVANIZED AFTER FABRICATION (ASTM SPEC. A-123).
4. SIGNS SHALL BE INSTALLED IN ACCORDANCE WITH COUNTY STANDARD 303.

SAN BERNARDINO COUNTY ROAD DEPARTMENT		STREET MARKER POST INSTALLATION	303 b
H.G. 1-71 R.O.L. 10-61	M. A. Nicholas COUNTY ENGINEER		

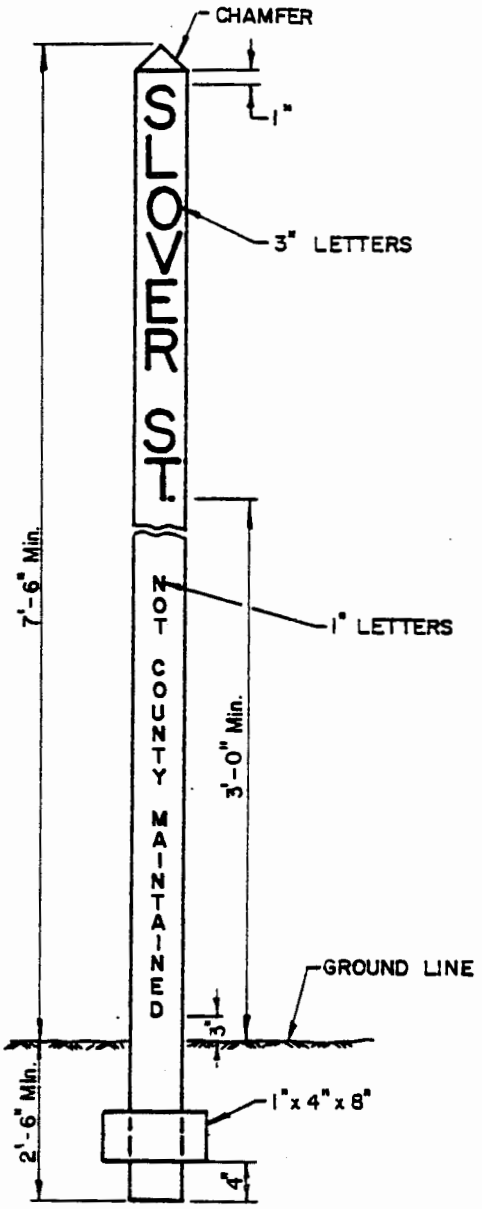

NOTES:

1. SEE STANDARD NO 303a FOR MARKER LOCATIONS.
2. POST SHALL BE 4"x 4" CONSTRUCTION HEART STRUCTURAL REDWOOD, S. 4 S. AND/OR EQUIVALENT AS APPROVED BY STANDARD SPECIFICATIONS.
3. ALL WOOD SURFACES SHALL BE GIVEN ONE COAT OF WOOD PRIMER AND TWO COATS OF ENAMEL; SIGN POST YELLOW, IN ACCORDANCE WITH THE STANDARD SPECIFICATIONS.
4. LETTERS SHALL BE STENCILED WITH BLACK PAINT ON ALL SIDES.
5. STREET NAME LETTERS SHALL BE 3" HIGH AND NOT COUNTY MAINTAINED LETTERS 1" HIGH ROUNDED TYPE STYLE CONFORMING WITH THE STANDARD ALPHABET FOR HIGHWAY SIGNS DESIGNED BY THE U.S. PUBLIC ROADS ADMINISTRATION.

SAN BERNARDINO COUNTY ROAD DEPARTMENT H.G. 1-71	*M. A. Nicholas* COUNTY ENGINEER	STREET MARKER DESERT ROAD - 2 1/2 ACRE	303c

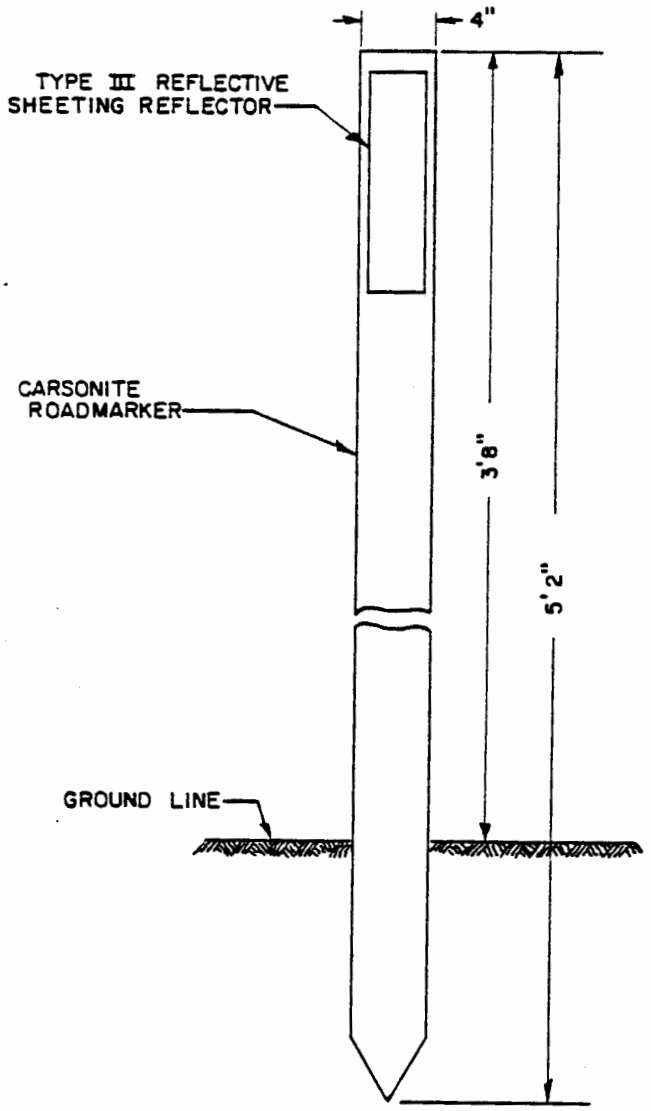

NOTES:

1. MARKER SHALL BE A CARSONITE ROADMARKER CONSISTING OF A CARSONITE POST WITH A 3"X12" FHWA TYPE III REFLECTIVE SHEETING REFLECTOR.

SAN BERNARDINO COUNTY ROAD DEPARTMENT			
DATE: F.V.C. 7-85 R.L.J. 10-81	M. A. Nicholas COUNTY ENGINEER	MARKERS	304

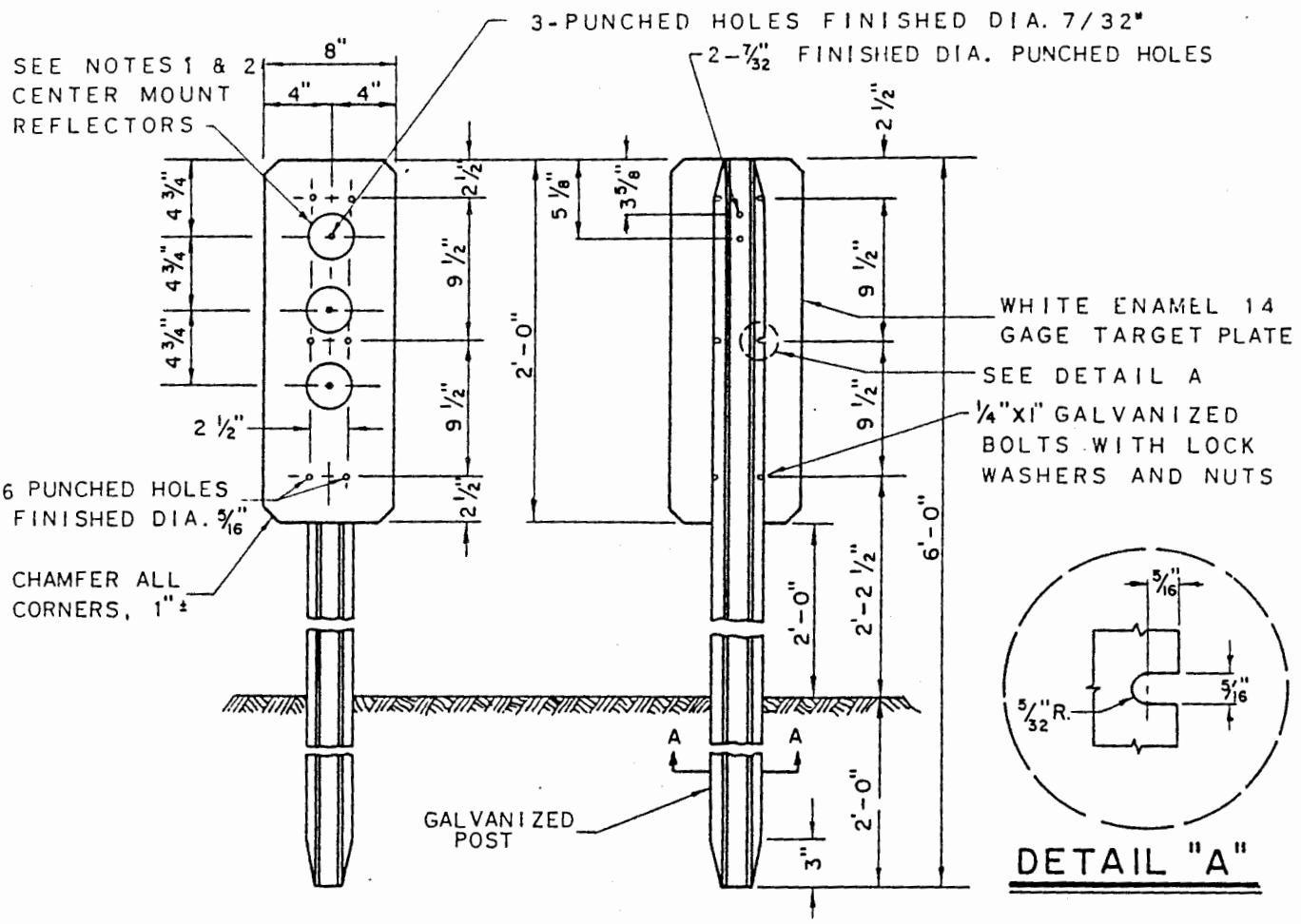

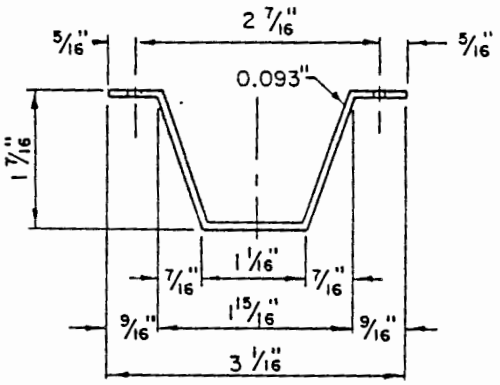

SECTION A-A

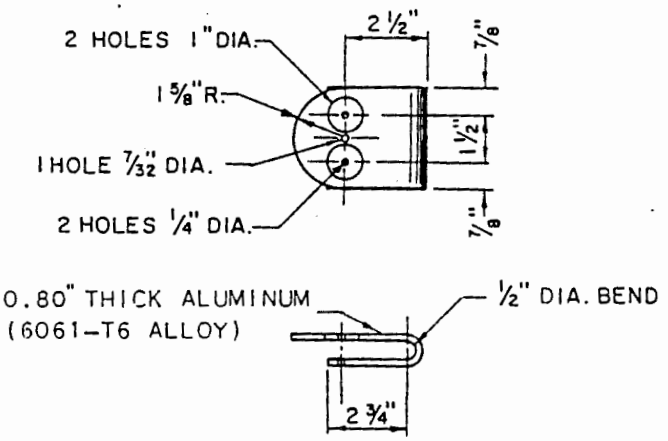

REAR MOUNT BRACKET

NOTES:

1. CLEARANCE MARKER (W-60R) THREE 3 1/4" YELLOW CENTERMOUNT REFLECTORS.
2. GUIDE MARKERS ONE 3 1/4" WHITE CENTERMOUNT REFLECTOR.
3. REAR MOUNT REFLECTOR BRACKET SHALL BE USED ON CURVES. BRACKET SHALL BE ATTACHED WITH 3/16" BLIND ALUMINUM RIVETS AND USED TO MOUNT A 3" WHITE REFLECTOR.
4. ALL MATERIALS SHALL CONFORM TO STATE OF CALIFORNIA, STANDARD SPECIFICATIONS
5. HOLE DIAMETERS APPLY TO DIMENSION AFTER ITEM IS PAINTED.

SAN BERNARDINO COUNTY ROAD DEPARTMENT			
DATE: F.V.C. 7-65 RJO 8-89	KEN A. MILLER DIRECTOR OF TRANSPORTATION	MARKERS	304 A

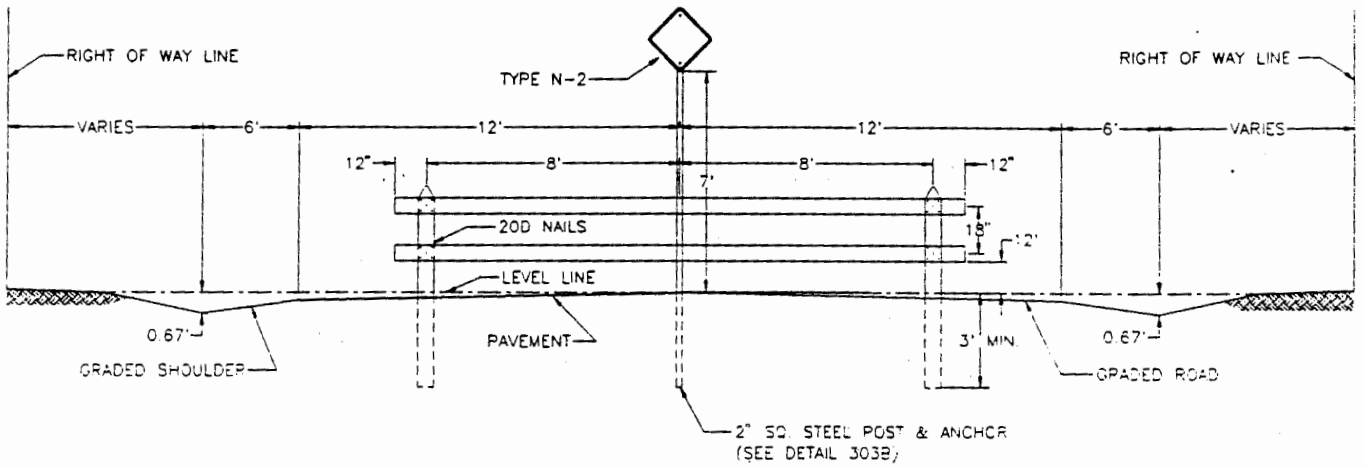

SECTION VIEW

WIDTH OF ROADWAY	NUMBER OF PANELS	TOTAL LENGTH OF PANELS
20' ALLEY	2	18'
36'	4	34'
44'	5	42'
64'	7	58'
DESERT ROAD	VARIES	VARIES

NOTES:

1. POSTS ARE TO BE CHAMFERED 6" X 6" X 6' CONST. HEART REDWOOD, S4S. TWO CROSS PLANKS ARE TO BE 2" X 6" DOUGLAS FIR, CONSTRUCTION GRADE.
2. BARRICADE MATERIALS AND N-2 REFLECTOR SHALL CONFORM TO STATE OF CALIFORNIA STANDARD SPECIFICATIONS AND TO FHWA TYPE IIIA OR VISUAL IMPACT PERFORMANCE (VIP) REFLECTIVE SHEETING.
3. ALL EXPOSED WOOD SURFACES SHALL BE GIVEN 2 BRUSH COATS OF FUME-RESISTANT EXTERIOR WHITE PAINT CONFORMING TO STATE OF CALIFORNIA SPECIFICATION 58-G-06.
4. FOR RAIL TO POST CONNECTIONS , PROVIDE TWO EACH 3/8" CARRIAGE BOLTS WITH CUT WASHERS AND NUTS.

STDS\305 01/20/95

SAN BERNARDINO COUNTY TRANS. DEPT.		
KEN A. MILLER Director of Transportation	BARRICADE URBAN AREA	305

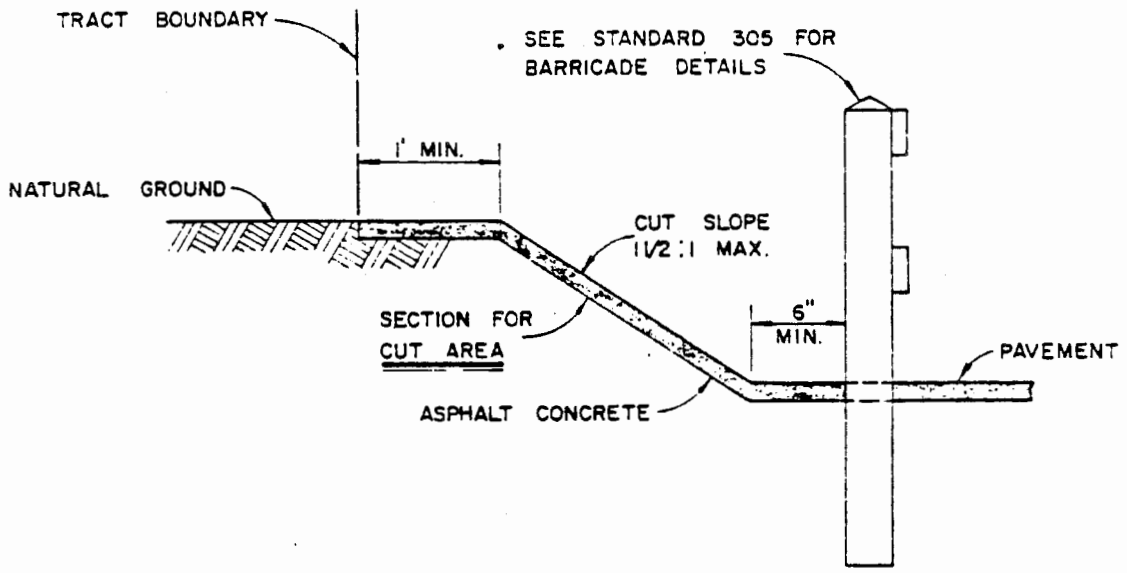

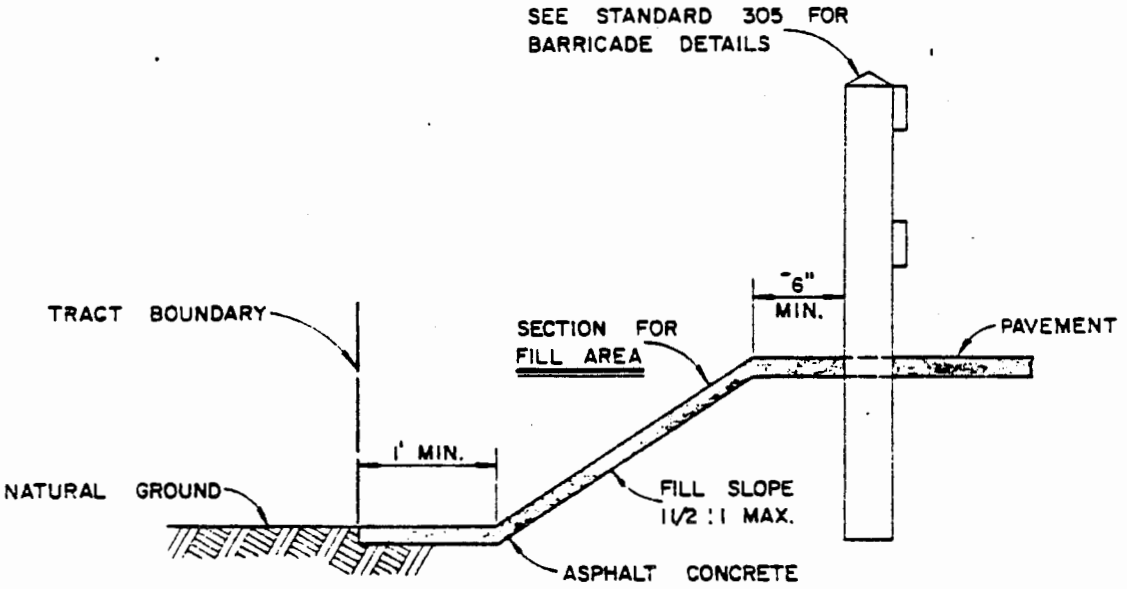

NOTES:

1. ASPHALT CONCRETE SHALL BE MINIMUM 3 INCHES THICKNESS ON CUT OR FILL AREA.

SAN BERNARDINO COUNTY ROAD DEPARTMENT		END OF STREET TEMPORARY PAVEMENT	305a
DATE: J.E.M. 10-65 R.A.T. 10-81	*M. A. Nicholas* COUNTY ENGINEER		

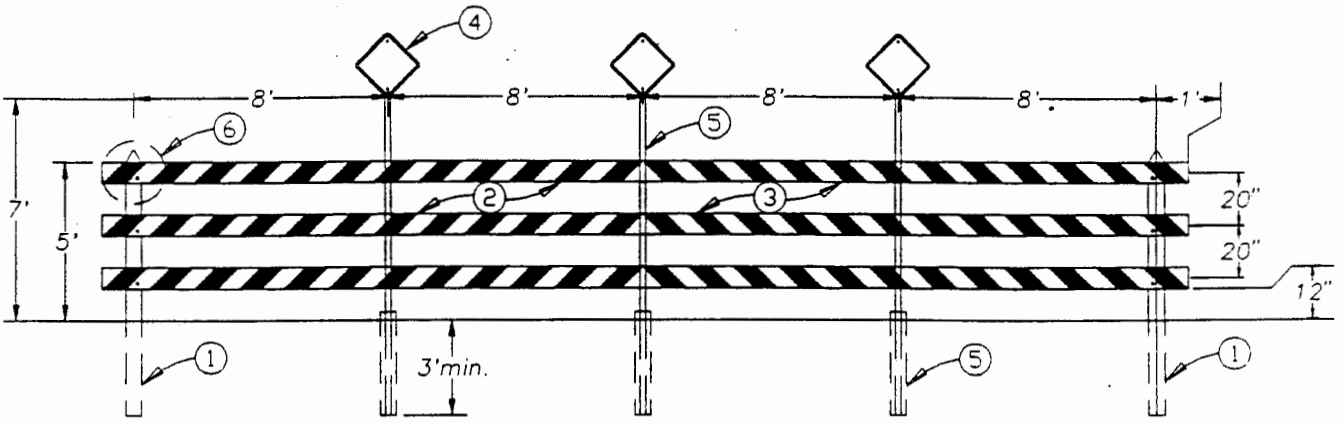

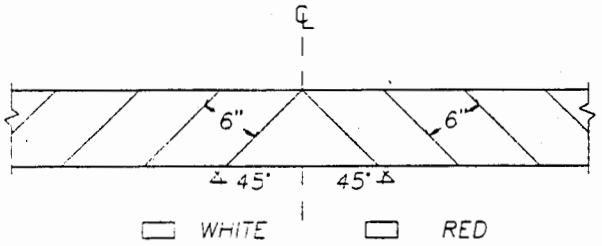

WIDTH OF ROADWAY	NUMBER OF PANELS	NO. OF N2	TOTAL LENGTH OF RAILS
20' ALLEY	2	1	20' MAX.
26'	3	2	26'
36'	4	3	34'
44'	5	3	42'
64'	8	4	66'
80'	10	4	82'

(3) REFLECTIVE TAPE DETAIL

NOTE: RAILS FACING IN TWO DIRECTIONS, NUMBER OF REFLECTORIZED RAILS SHOULD BE ON TWO FACES.

NOTES:

(1) – Post Is To Be 6" x 6" x Varies, Timber S.4S.

(2) – Three (3) Cross Panels To Be 2" x 8" x Varies, Timber S.4S.

(3) – Reflective Tape Consists Of Reflective Diamond Grade Sheeting With High Tack Pressure Sensitive Adhesive, White And Red Tape With 6" Width. (See Detail Above)

(4) – Object Marker Red Type N2 Sign Reflector Shall Conform To State Of California Standard Specification And To FHWA Type IIIA Or Visual Impact Performance (VIP) Reflective Sheeting. Use A Minimum Of Two (2) Signs (Similar To Standard Detail 306).

(5) – 2" Square Steel Post And 2 1/2" Square Anchor Sleeve. (See Standard Detail 303B).

(6) – Use 3/8" Diameter x 4 1/2" Long Lag Bolts (Galvanized) For Fastening Item 2 To Item 1. (Minimum 4 Bolts Per Connection).

7 – Rails Facing Traffic To Be Reflectorized.

8 – All Timber To Be S.4S Weather Resistant.

9 – All Dimensions are Nominal Lumber Dimensions.

STDS\305B 01/20/95

SAN BERNARDINO COUNTY TRANS. DEPT.		
KEN A. MILLER Director of Transportation	BARRICADE RURAL AREA	305B

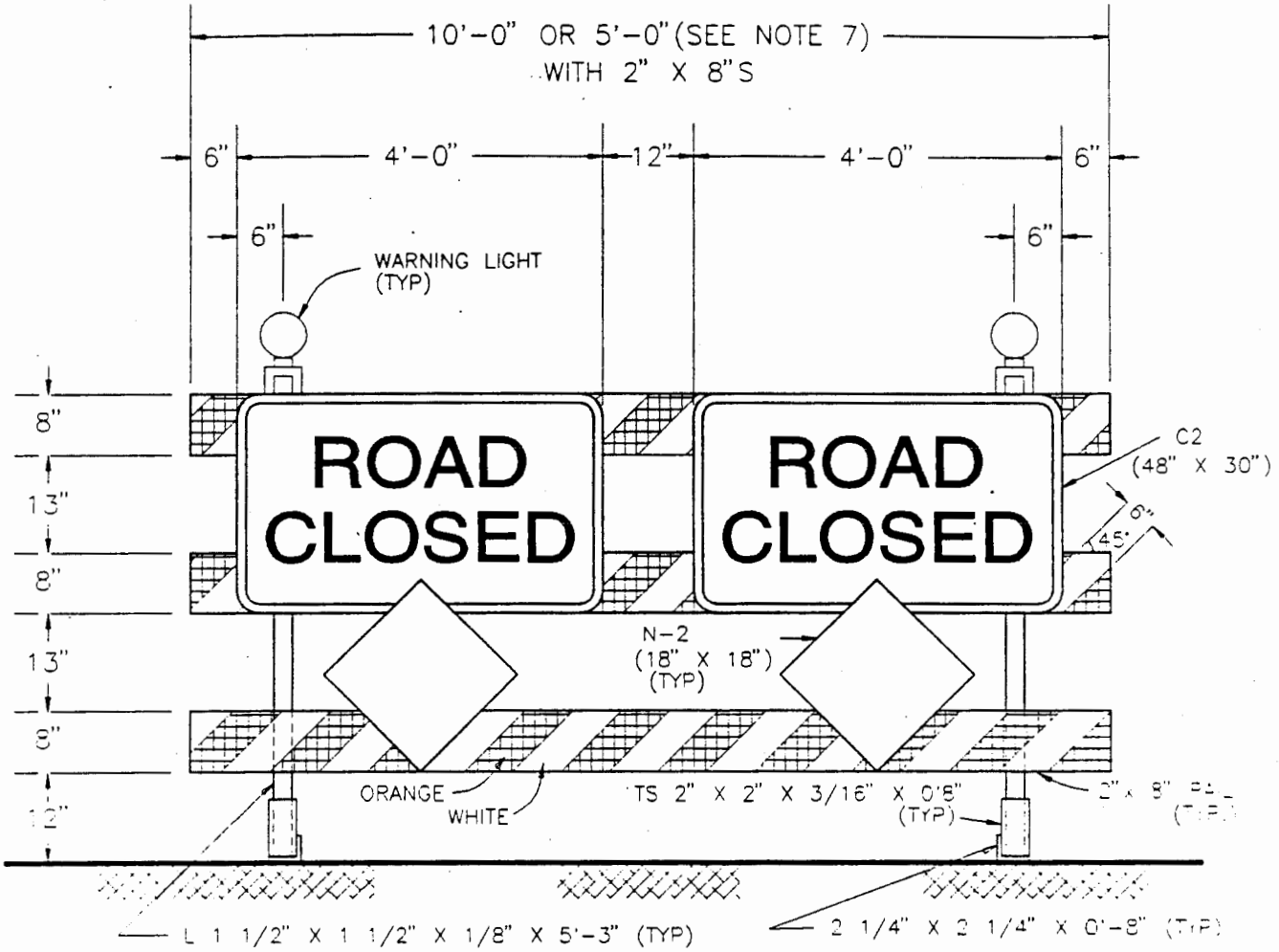

SECTION VIEW

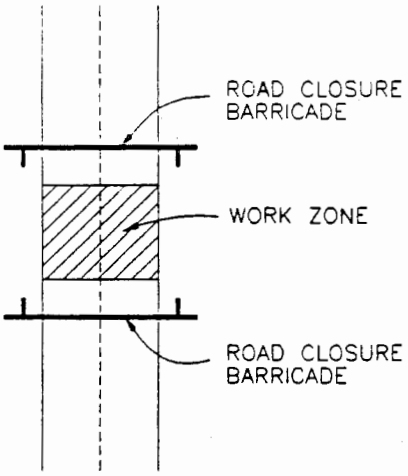

PLAN

NOTES:

1. All timber shall be S4S.
2. White and orange painted stripes shall be reflectorized per FHWA II (Engineering Grade Sheeting).
3. Traffic Control Devices shall be of high intensity sheeting.
4. For rail to post connection, provide 2-3/8" Carriage Bolts with cut washers and nuts.
5. Advance construction signs are required.
6. Use N-2 with Visual Impact Performance (VIP) sheeting.
7. For 5'-0" barrigade, use only one C-2 and N-2 mounted at the center of the assembly.

STDS\305C

01/20/95

SAN BERNARDINO COUNTY TRANS. DEPT.	ROAD CLOSURE BARRICADE	305C
KEN A. MILLER Director of Transportation		

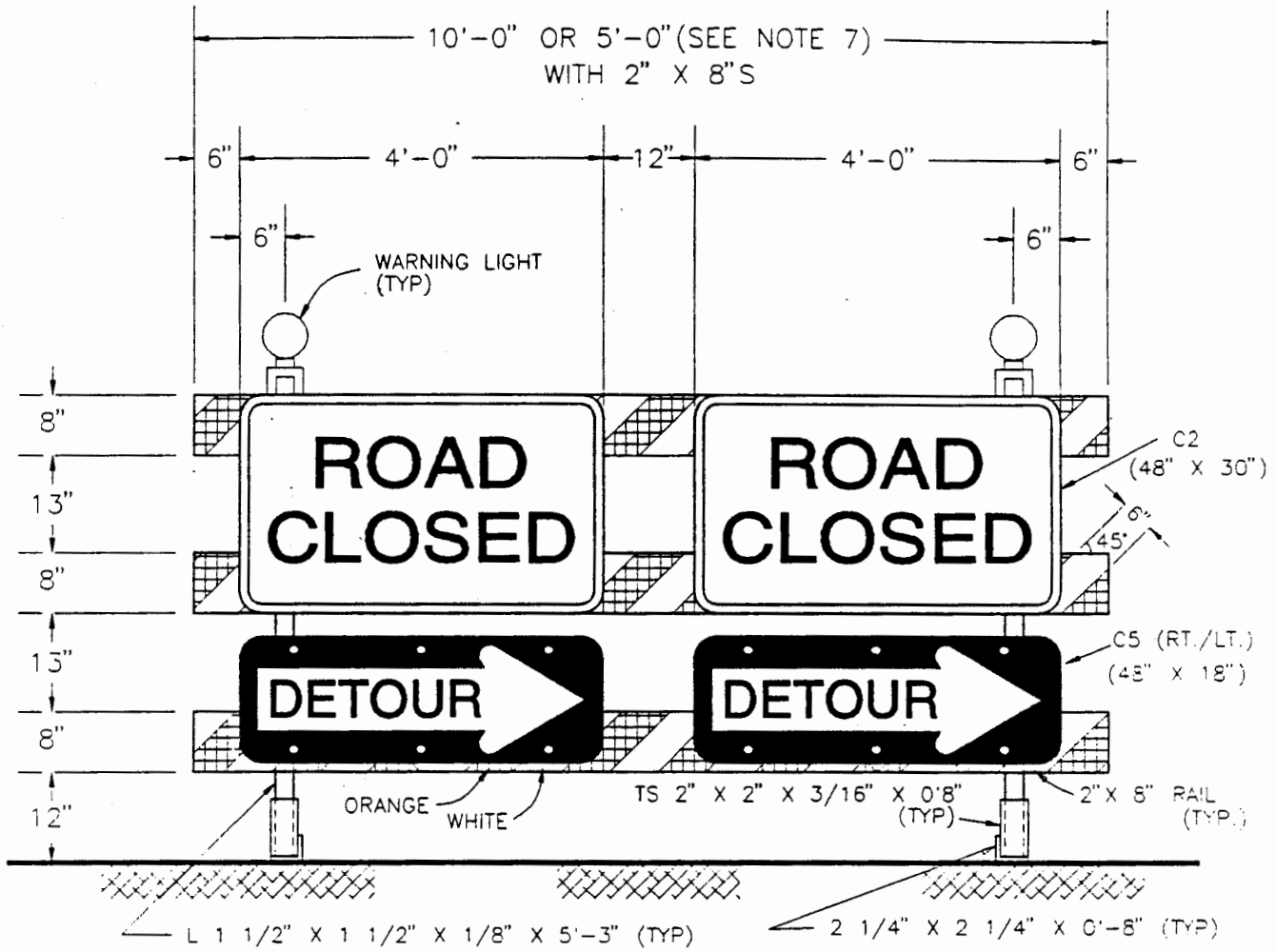

SECTION VIEW

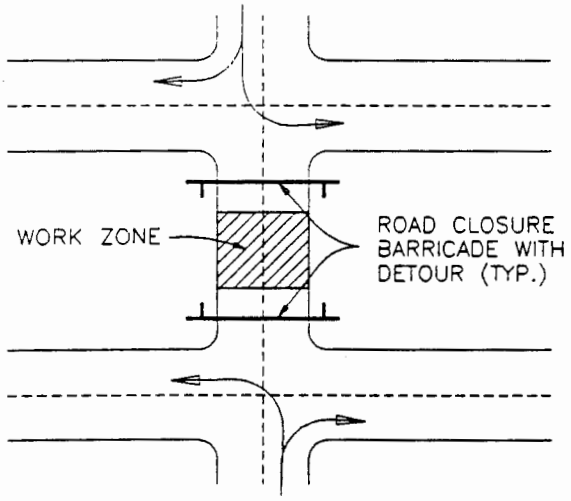

PLAN

NOTES:

1. All timber shall be S4S.
2. White and orange painted stripes shall be reflectorized per FHWA II (Engineering Grade Sheeting).
3. Traffic Control Devices shall be of high intensity sheeting.
4. For rail to post connection, provide 2-3/8" Carriage Bolts with cut washers and nuts.
5. Advance construction signs are required.
6. For 5'-0" barrigade, use only one C2 and C5 mounted at the center of the assembly.

STDS\305D

01/20/95

SAN BERNARDINO COUNTY TRANS. DEPT.	KEN A. MILLER Director of Transportation	ROAD CLOSURE BARRICADE WITH DETOUR	305D

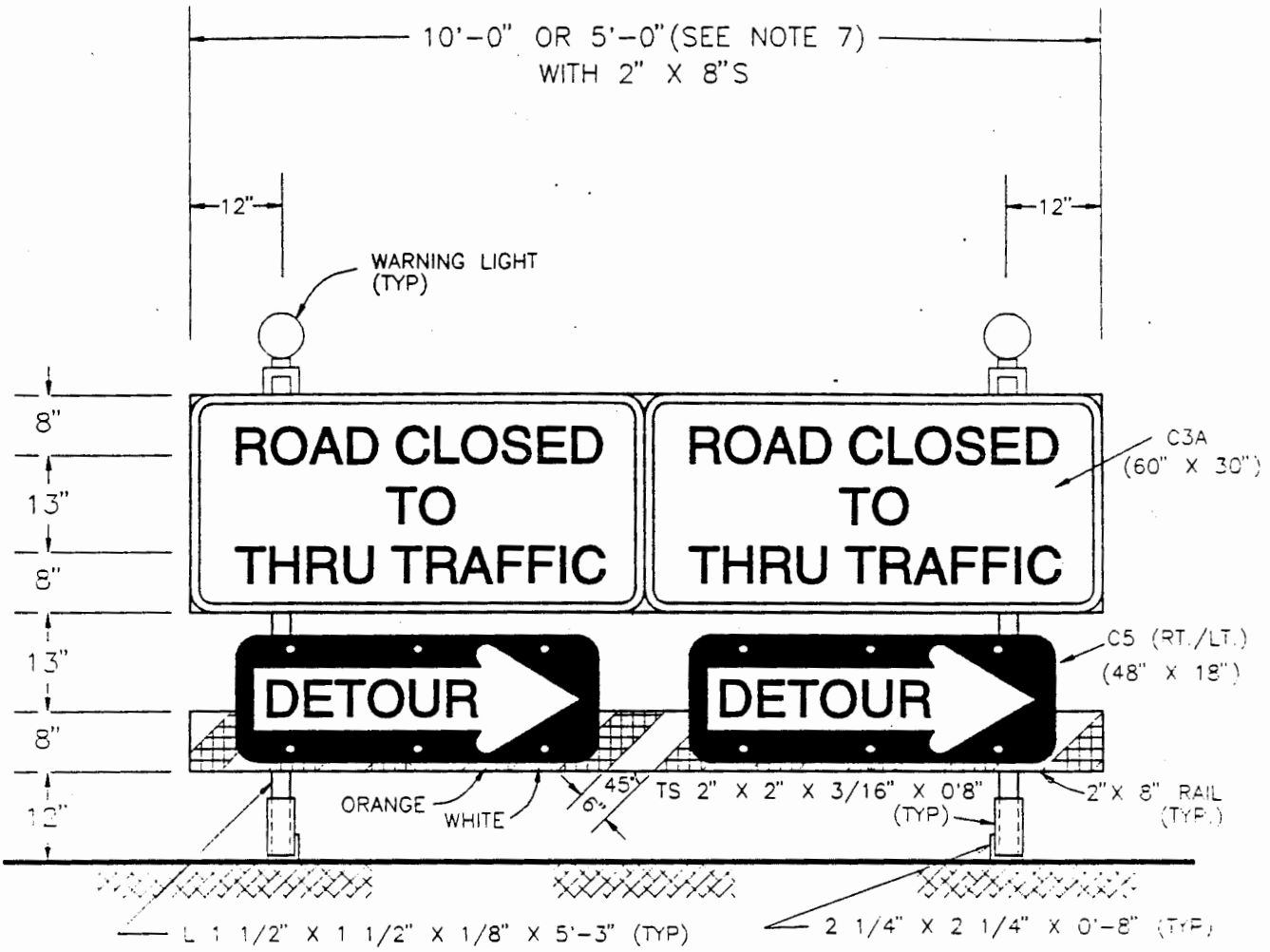

SECTION VIEW

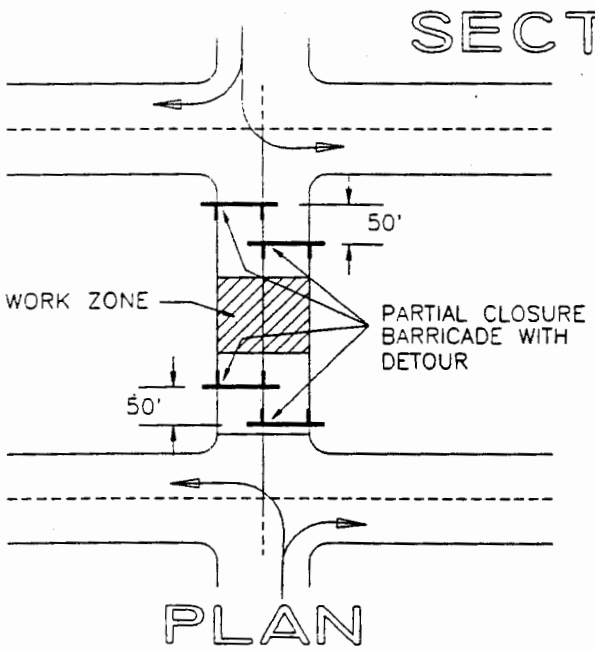

PLAN

NOTES:

1. All timber shall be S4S.
2. White and orange painted stripes shall be reflectorized per FHWA II (Engineering Grade Sheeting).
3. Traffic Control Devices shall be of high intensity sheeting.
4. For rail to post connection, provide 2-3/8" Carriage Bolts with cut washers and nuts.
5. Advance construction signs are required.
6. For 5'-0" barrigade, use only one C3A and C5 mounted at the center of the assembly.

STDS\305E

01/20/95

SAN BERNARDINO COUNTY TRANS. DEPT.	KEN A. MILLER Director of Transportation	PARTIAL ROAD CLOSURE BARRICADE WITH DETOUR	305E

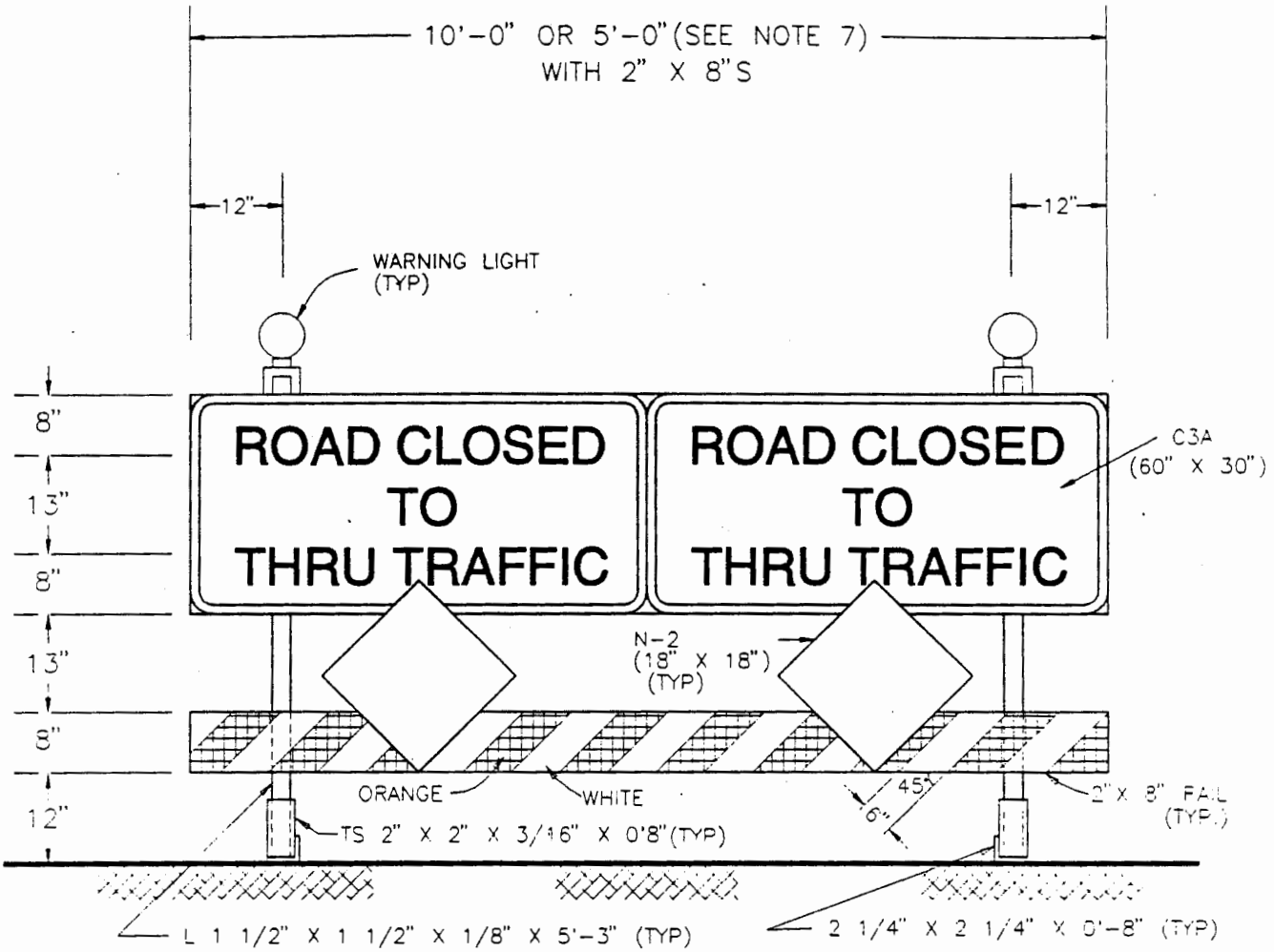

SECTION VIEW

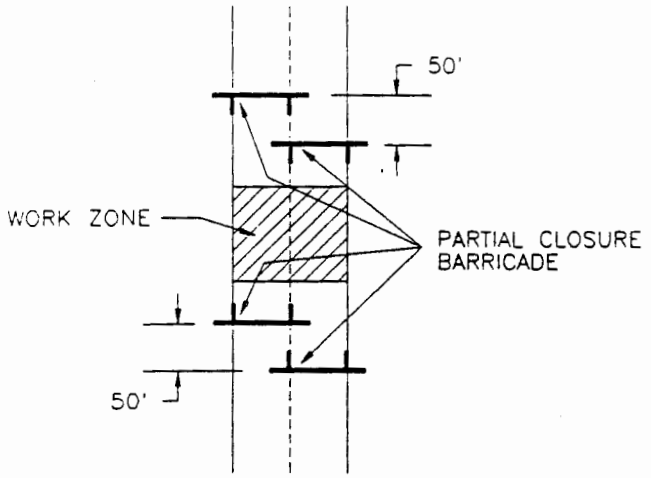

PLAN

NOTES:

1. All timber shall be S4S.
2. White and orange painted stripes shall be reflectorized per FHWA II (Engineering Grade Sheeting).
3. Traffic Control Devices shall be of high intensity sheeting.
4. For rail to post connection, provide 2-3/8" Carriage Bolts with cut washers and nuts.
5. Advance construction signs are required.
6. Use N-2 Visual Impact Performance (VIP) sheeting.
7. For 5'-0" barrigade, use only one C3A and N-2 mounted at the center of the assembly.

STDS\305F

01/20/95

SAN BERNARDINO COUNTY TRANS. DEPT.		
	KEN A. MILLER Director of Transportation	PARTIAL ROAD CLOSURE BARRICADE	305F

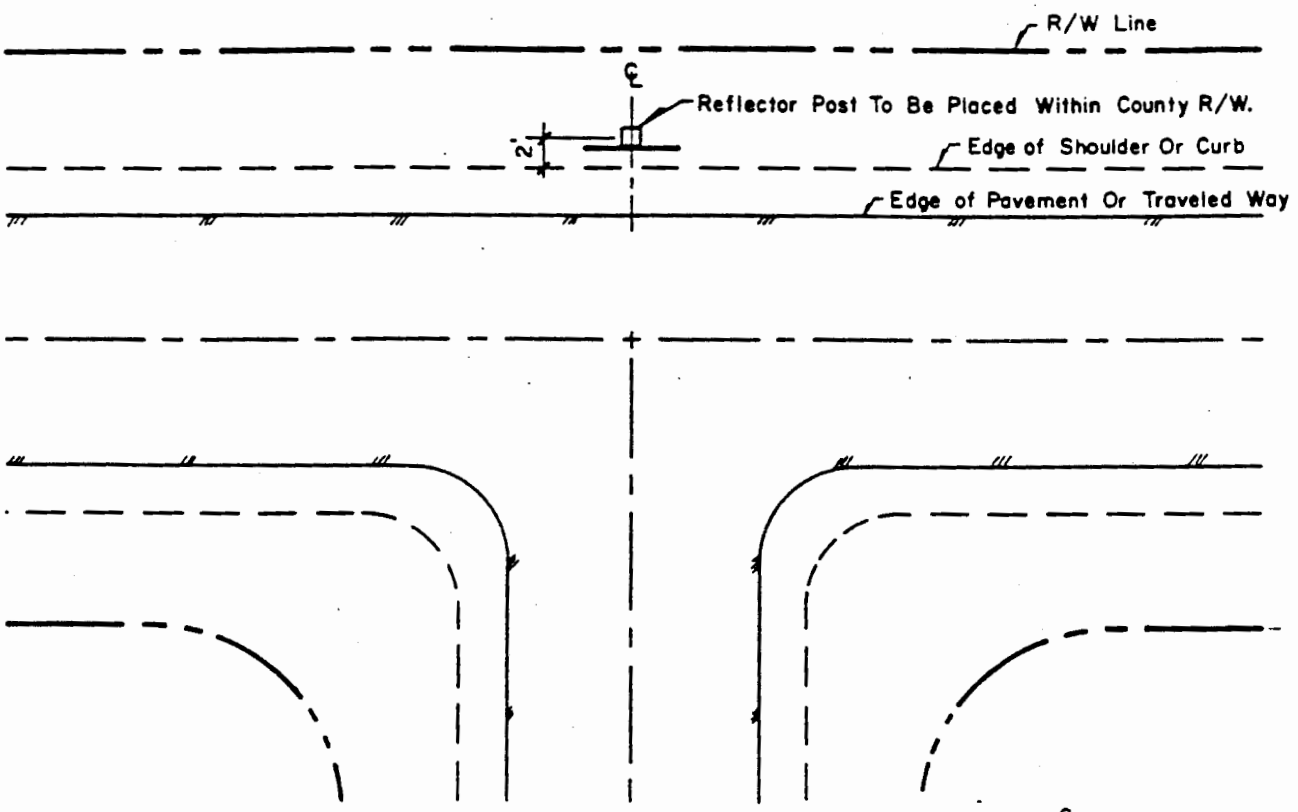

PLAN

NOTES:

1. Post Shall Be 2"x 2" Square Steel In Accordance With Standard Nº 303b.
2. Materials And Type N Reflector Shall Conform To State Of California, Standard Specifications.
   Type N-1 Shall Be Yellow FHWA Type III Reflective Sheeting.
   Type N-2 Shall Be Red FHWA Type III Reflective Sheeting.

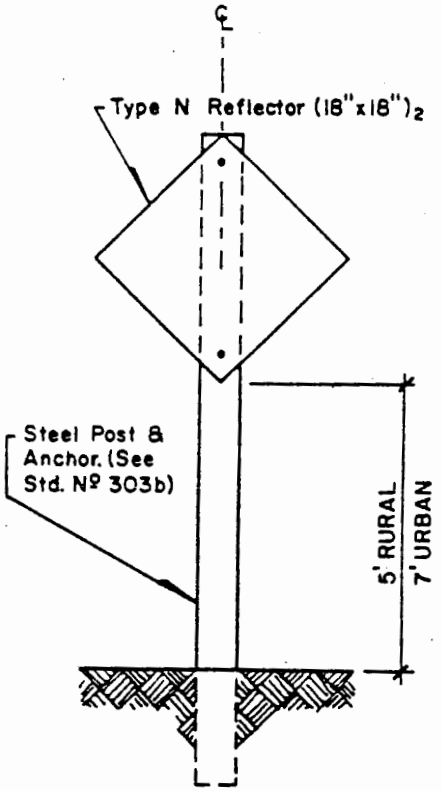

ELEVATION

SAN BERNARDINO COUNTY TRANS. DEPT.			
OCT. 6, 1993 v.h.c.	KEN A. MILLER Director of Transportation	POST WITH REFLECTOR	306
REV. 3/1/94			

CENTERLINE STRIPING

L01 Traffic is permitted to pass for both directions of travel

Centerline pattern for use on two-lane streets and highways (normally used on local streets and highways).

L01a Traffic is permitted to pass for both directions of travel

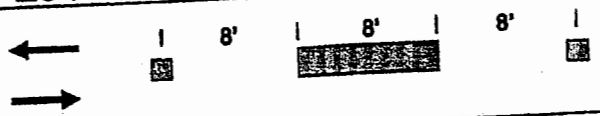

Centerline pattern with pavement markers for use on two-lane streets and highways.

L14 Traffic is permitted to pass along dotted line and passing is prohibited along solid line

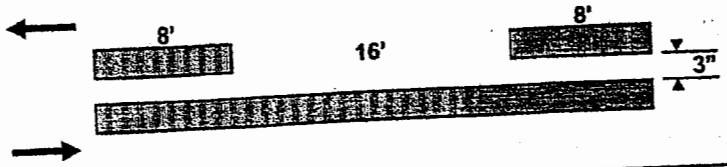

One direction no passing pattern for use on two-lane streets and highways (normally used on local streets and highways).

L14a Traffic is permitted to pass along dotted line and passing is prohibited along solid line

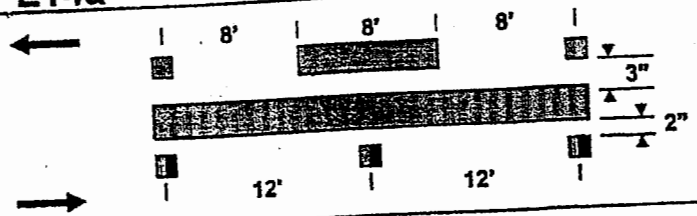

One direction no-passing pattern with pavement markers for use on two lane streets and highways.

Direction of Travel | 4" Yellow Stripe | Two-Way Yellow Reflective Markers | One-Way Yellow Reflective Markers

SAN BERNARDINO COUNTY TRANS. DEPT.		**STRIPING DETAILS**	**307**
NOT TO SCALE	PAT MEAD Director of Public Works		

CENTERLINE STRIPING

L07 4 Lanes Continuous Left-Turn Lane

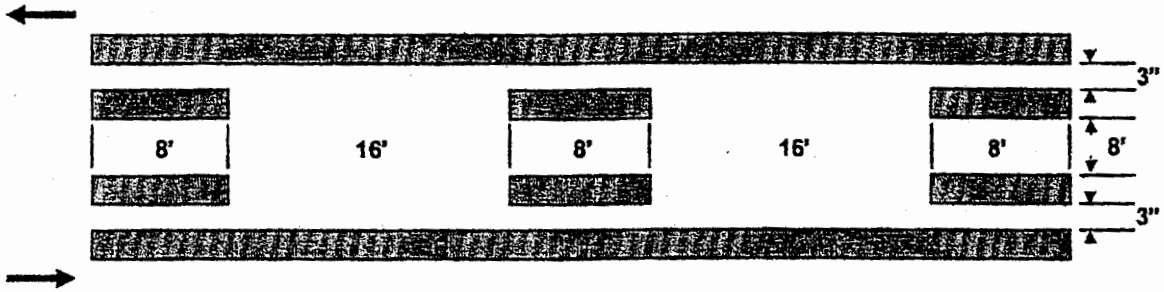

Two way left turn lane pattern for use on two-lane streets and highways (normally used on local streets and highways).

L07a 4 Lanes Continuous Left-Turn Lane

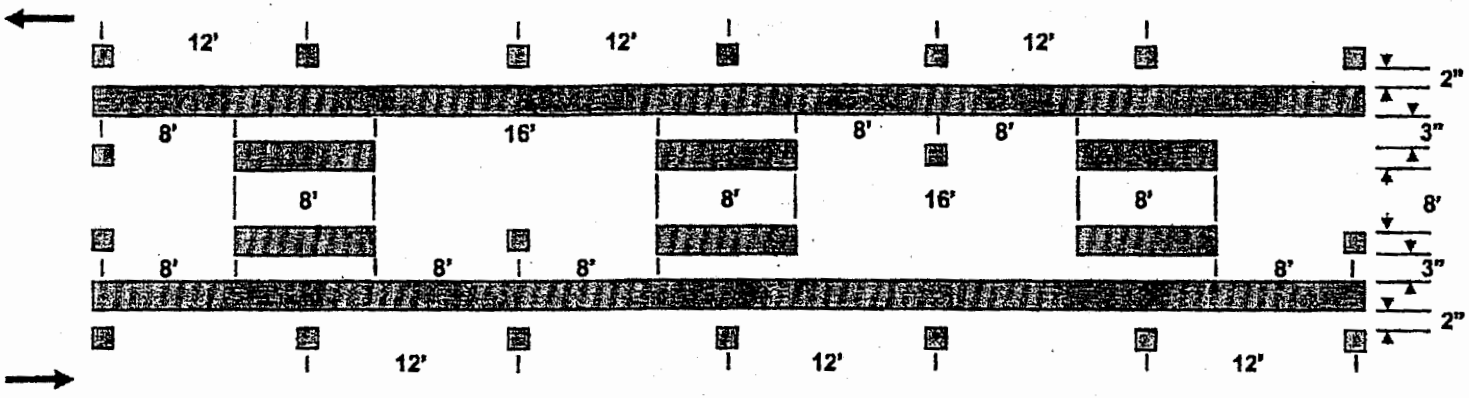

Two way left turn lane pattern with markers for use on two-lane streets and highways.

Direction of Travel | 4" Yellow Stripe | Two-Way Yellow Reflective Markers

SAN BERNARDINO COUNTY TRANS. DEPT.		STRIPING DETAILS	307a
NOT TO SCALE	PAT MEAD Director of Public Works		

CENTERLINE STRIPING

L05 Painted Median

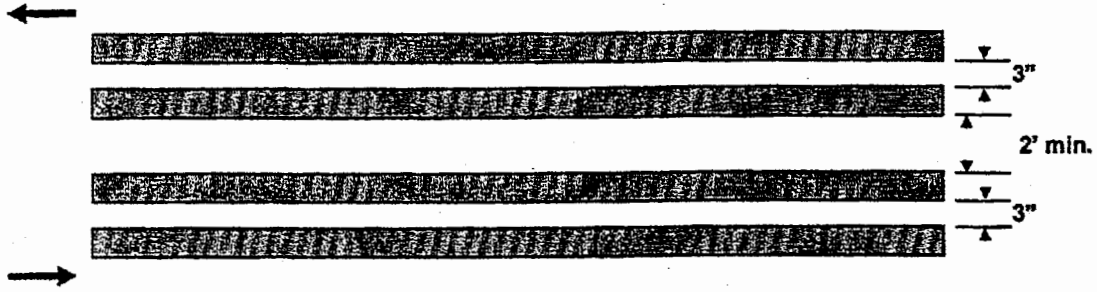

Double Left Edgeline pattern for use on all-paved sections of streets and highways (normally used on local streets and highways).

L05a Painted Median

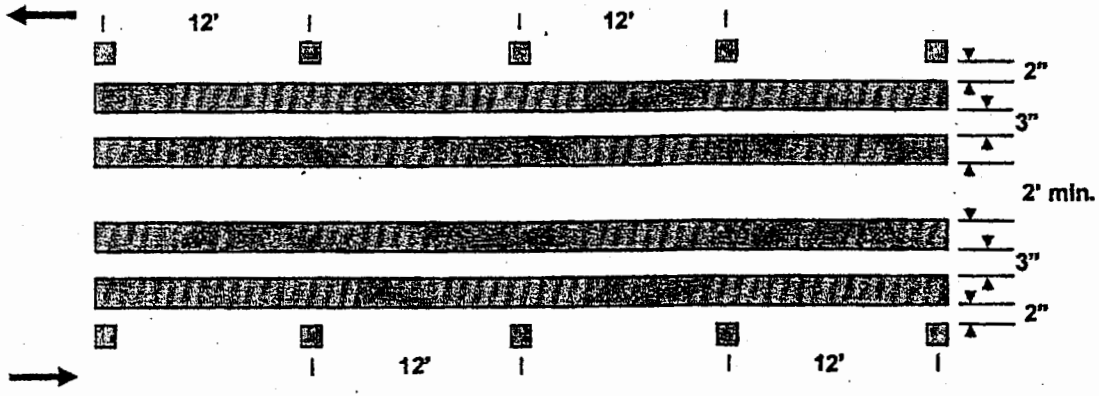

Double Left Edgeline pattern with pavement markers for use on all-paved sections of streets and highways.

Direction of Travel 4" Yellow Stripe Two-Way Yellow Reflective Markers

SAN BERNARDINO COUNTY TRANS. DEPT.			
NOT TO SCALE	PAT MEAD Director of Public Works	**STRIPING DETAILS**	**307b**
Revised 12/05			

CENTERLINE STRIPING

L12 2 Lanes 1 Each Direction, No Passing

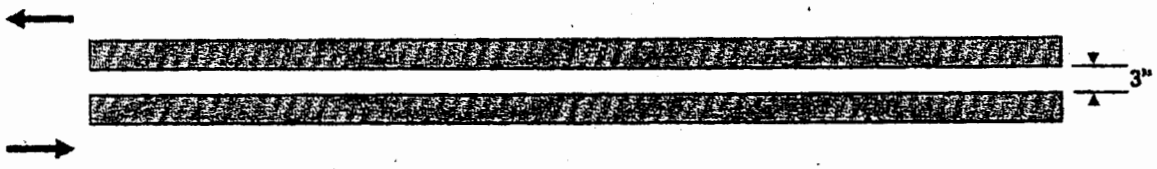

Two-direction no-passing pattern for use on two-lane streets and highways (normally used on local streets and highways).

L12a 2 Lanes 1 Each Direction, No Passing

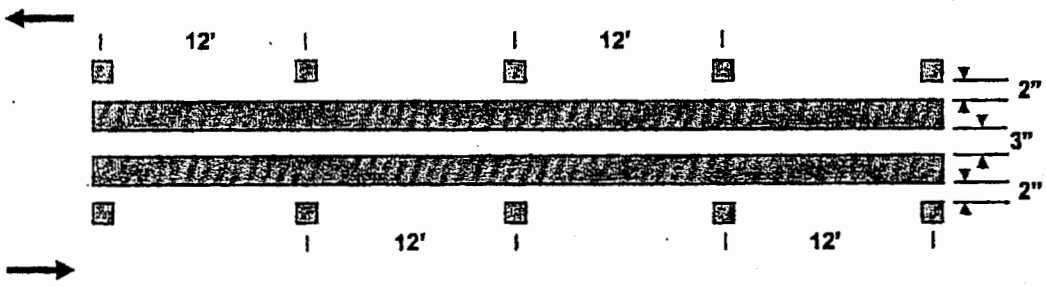

Two-direction no-passing pattern with markers for use on two-lane streets and highways.

Direction of Travel | 4" Yellow Stripe | Two-Way Yellow Reflective Markers

SAN BERNARDINO COUNTY TRANS. DEPT.			
NOT TO SCALE	PAT MEAD Director of Public Works	**STRIPING DETAILS**	**307c**
Revised 12/05			

LANELINE STRIPING

L26 Laneline Quarterstripe Pattern

Laneline pattern for use on multi-lane streets and highways (normally used on local streets and highways).

L26a Laneline Quarterstripe Pattern

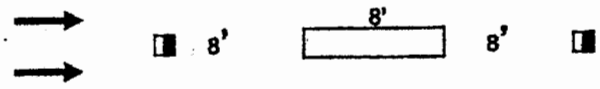

Laneline pattern with pavement markers for use on two-lane streets and highways.

EDGELINE STRIPING

L27 Right Edgeline

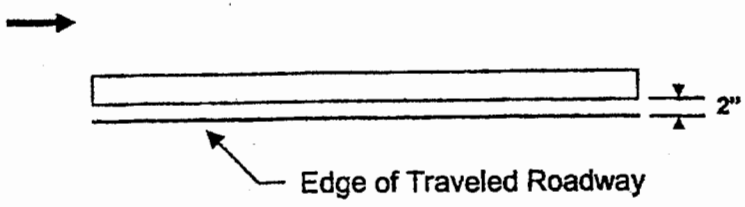

Right Edgeline pattern for use local streets and highways. It is generally dropped at the beginning of intersection flares on conventional highways.

Direction of Travel | 4" White Stripe | One-Way White Reflective Markers

SAN BERNARDINO COUNTY TRANS. DEPT.		STRIPING DETAILS	307d
NOT TO SCALE	PAT MEAD Director of Public Works		
Revised 12/05			

REFER TO STATE OF CALIFORNIA, DEPARTMENT OF TRANSPORTATION, STANDARD PLAN MANUAL FOR CURRENT CONSTRUCTION & MATERIALS REQUIREMENTS.

SAN BERNARDINO COUNTY TRANS. DEPT.	KEN A. MILLER Director of Transportation	METAL BEAM GUARDRAIL	308

REFER TO STATE OF CALIFORNIA, DEPARTMENT OF TRANSPORTATION, STANDARD PLAN MANUAL FOR CURRENT CONSTRUCTION & MATERIALS REQUIREMENTS.

SAN BERNARDINO COUNTY TRANS. DEPT.	KEN A. MILLER Director of Transportation	METAL PLATE GUARDRAIL	309

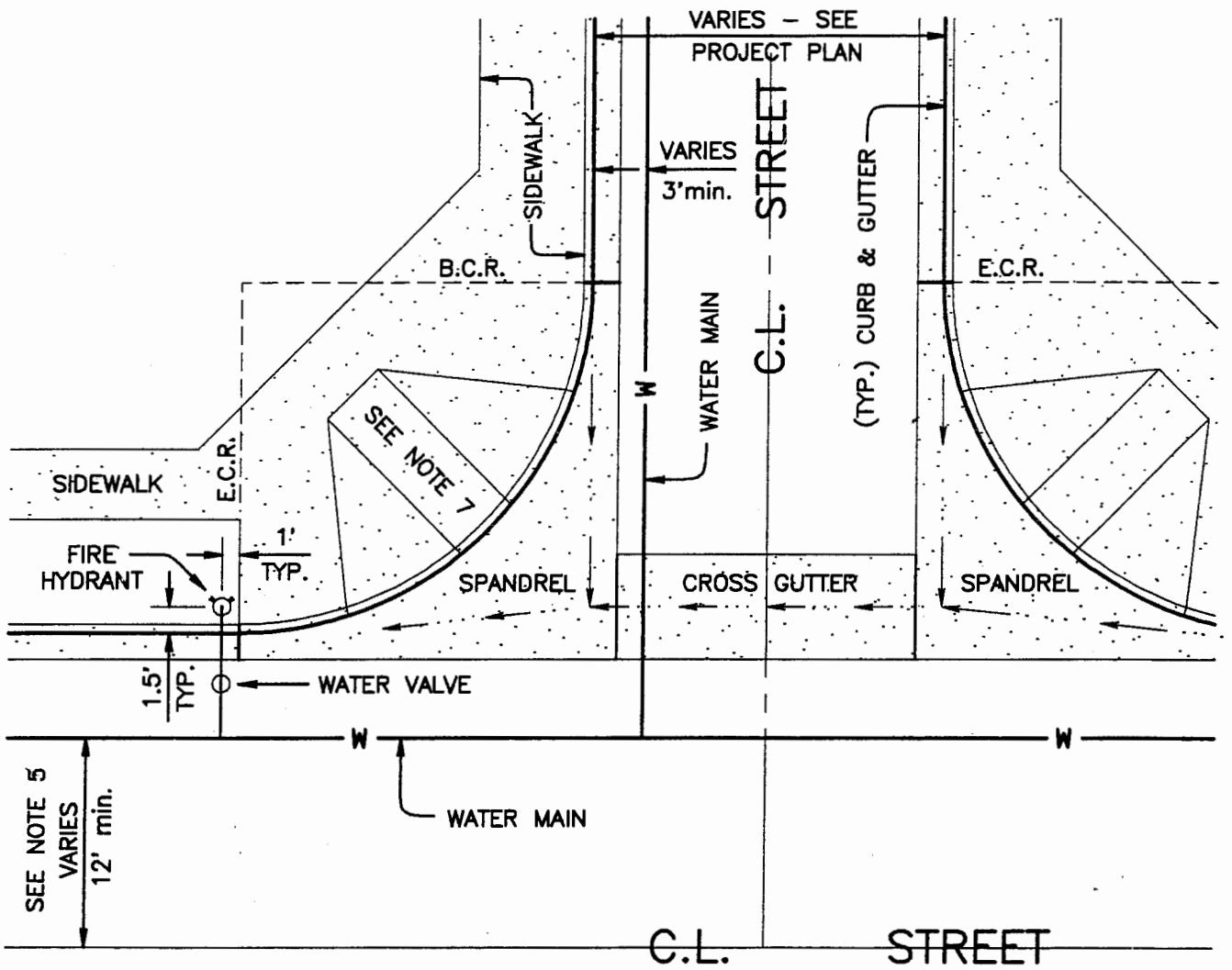

PLAN

NOTES:

1. LOCATION OF WATER LINES AND VALVES SHALL BE SHOWN ON THE PROJECT PLANS.
2. HYDRANT TO BE SET PLUMB, WITH NOZZLE A MINIMUM OF EIGHTEEN (18") INCHES ABOVE GROUND LEVEL. WHEN HYDRANTS ARE PLACED BEFORE GRADING IS COMPLETED, THE FINAL GRADE LINE, AND ACCESSIBILITY SHOULD BE CONSIDERED.
3. NO OBSTRUCTIONS SUCH AS POLES, GUY LINES, ETC. SHOULD BE PLACED CLOSER THAN (5') FEET TO HYDRANT.
4. FOR SUBDIVISION IMPROVEMENT PLANS. SEE HEALTH DEPARTMENT STANDARDS, SECTION 7, DISTRIBUTION SYSTEMS, FOR MINIMUM DEPTH.
5. FOR RECOMMENDED UTILITY LOCATION SEE COUNTY STD. 311
6. FOR RIGHT–OF–WAY LOCATION SEE PROJECT PLANS.
7. FOR CURB RETURN RADIUS & SIDEWALK RAMP DETAILS SEE COUNTY STD. 110

B.C.R. – BEGIN CURB RETURN E.C.R. – END CURB RETURN

SEE TERRAMODEL FILE – N:\ M2201\ MISCDET.pro

CO. OF SAN BDNO. DEPT. OF PUBLIC WORKS			
REVISED: DATE G.M. 12–05	PATRICK J. MEAD Director of Public Works	FIRE HYDRANT LOCATION	310

RECOMMENDED UTILITY LOCATION

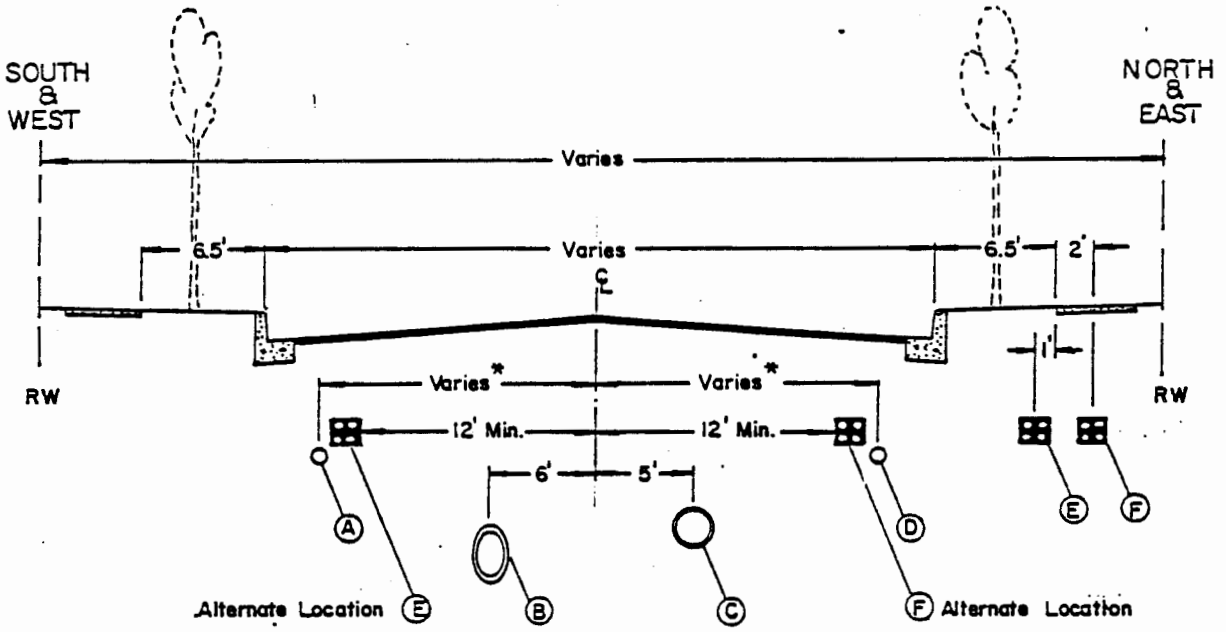

	UTILITY	MIN. COVER
A	WATER	30"
B	STORM DRAIN	Varies
C	SEWER	Varies
D	GAS	30"
E	POWER	36"
F	TELEPHONE-CATV	30"

RECOMMENDED UTILITY INSTALLATION SCHEDULE

1. STORM DRAIN
2. SEWER
3. POWER & TELEPHONE
4. CURB & GUTTER
5. WATER
6. GAS
7. PAVING

NOTES:

1. WHERE ULTIMATE STREET IMPROVEMENTS ARE TO BE CONSTRUCTED, MINIMUM COVER OF UTILITY LINES MAY BE VARIED TO FACILITATE INSTALLATION.
2. THE UTILITY COMPANIES SHALL MAKE EVERY EFFORT TO LOCATE THEIR FACILITIES IN THE RECOMMENDED LOCATIONS, PARTICULARLY IN NEW SUBDIVISIONS.
3. EDISON & TELEPHONE UTILITIES MAY USE A COMMON TRENCH. ALTERNATE LOCATION MAY BE EITHER THE EDISON POSITION OR THE TELEPHONE POSITION.
4. * VARIES 3' FROM THE CURB FACE TO 14' FROM ℄
5. THE CENTER 24' OF THE STREET SHALL BE RESERVED FOR SEWER AND STORM DRAIN INSTALLATION.
6. SURFACE OF VAULT OR MANHOLE MUST MATCH PAVEMENT AND PARKWAY GRADES.
7. REPAIR OF TRENCHES AND REPLACEMENT OF PAVED SURFACING IN EXIST COUNTY ROADS SHALL BE IN ACCORDANCE WITH CURRENT "SPECIFICATIONS FOR TRENCH REPAIR."
8. WHENEVER POSSIBLE, MANHOLE COVERS SHALL NOT BE PLACED WITHIN THE SIDEWALKS.

SAN BERNARDINO COUNTY ROAD DEPARTMENT DATE: 7-17-72	M. A. Nicholas COUNTY ENGINEER	UNDERGROUND UTILITY LOCATION	311

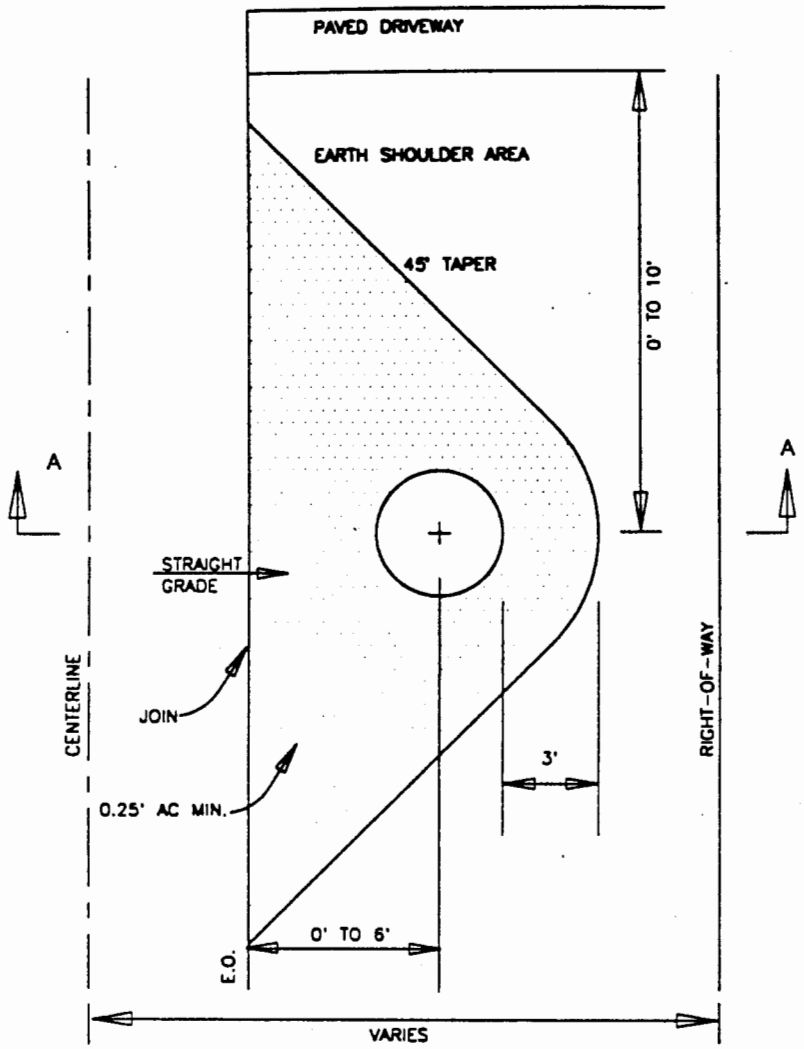

GENERAL NOTES:

1. MANHOLE SHALL BE SET TO EXISTING SHOULDER GRADE.
2. IF CENTER OF MANHOLE IS WITHIN 10' OF PAVED DRIVEWAY, NEW PAVING SHALL TIE INTO EXISTING DRIVEWAY.
3. IN THE MOUNTAIN AREA WHEN MANHOLES ARE ADJUSTED TO PAVEMENT GRADES, THEY SHALL BE 1/2 TO 3/4-INCH BELOW ADJACENT PAVEMENT SURFACE.

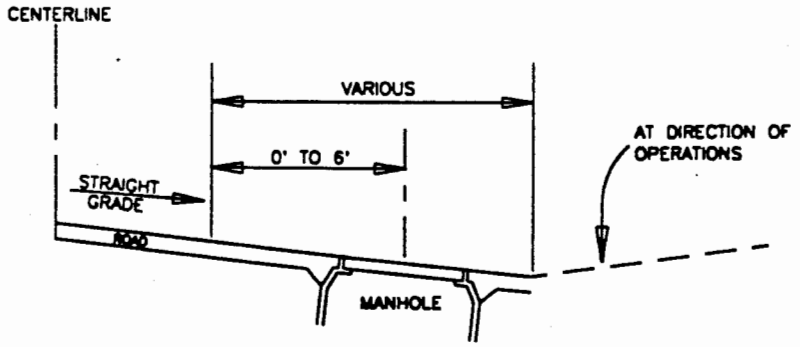

SECTION A-A

STDS\311-A

06/28/95

SAN BERNARDINO COUNTY TRANS. DEPT.			
	KEN A. MILLER Director of Transportation	MANHOLE APRON PAVED ROAD	311-A

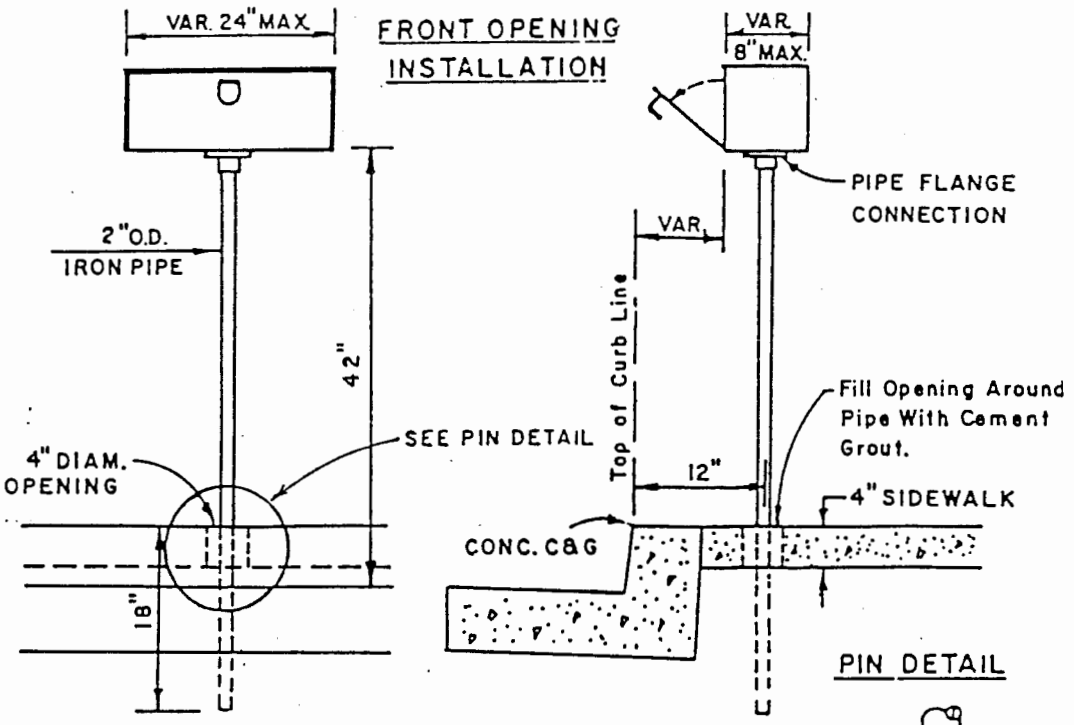

PIN DETAIL

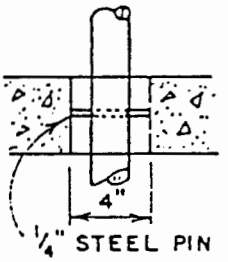

NOTE: END OPENING MAILBOX NOT PERMITTED. FACE OF MAILBOX SHALL NOT EXTEND PAST TOP OF CURB LINE.

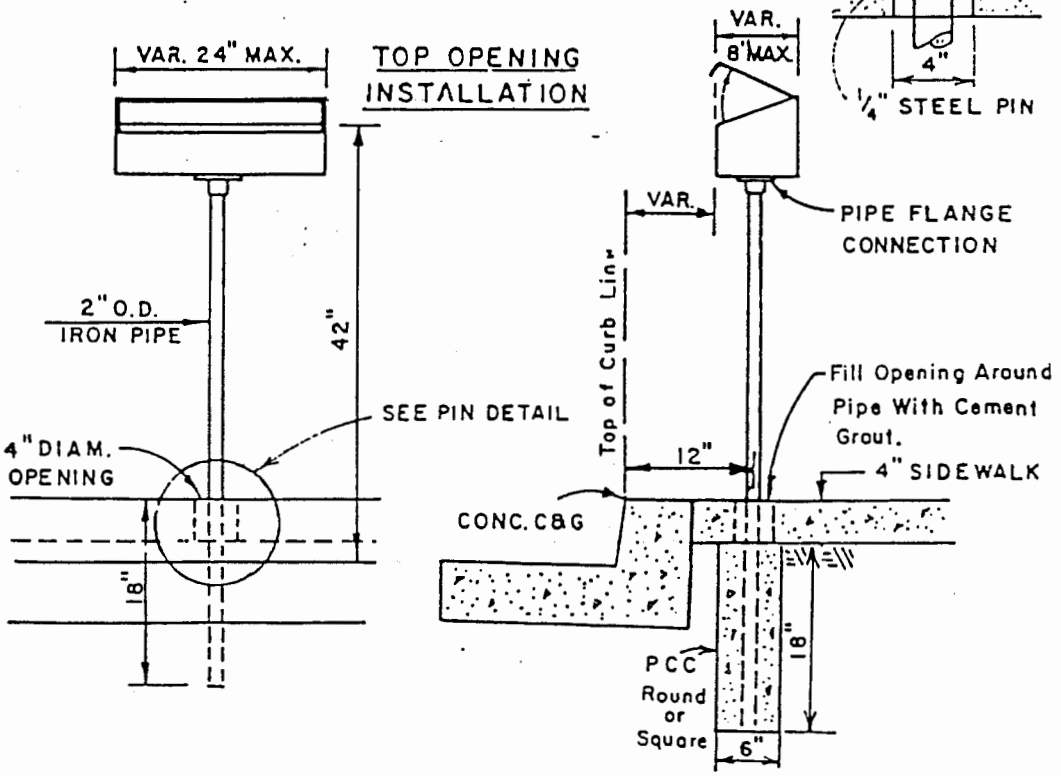

SAN BERNARDINO COUNTY ROAD DEPARTMENT			
DATE: RO 8-89	Ken A. Miller DIRECTOR OF TRANSPOTATION	SINGLE MAILBOX INSTALLATION	312

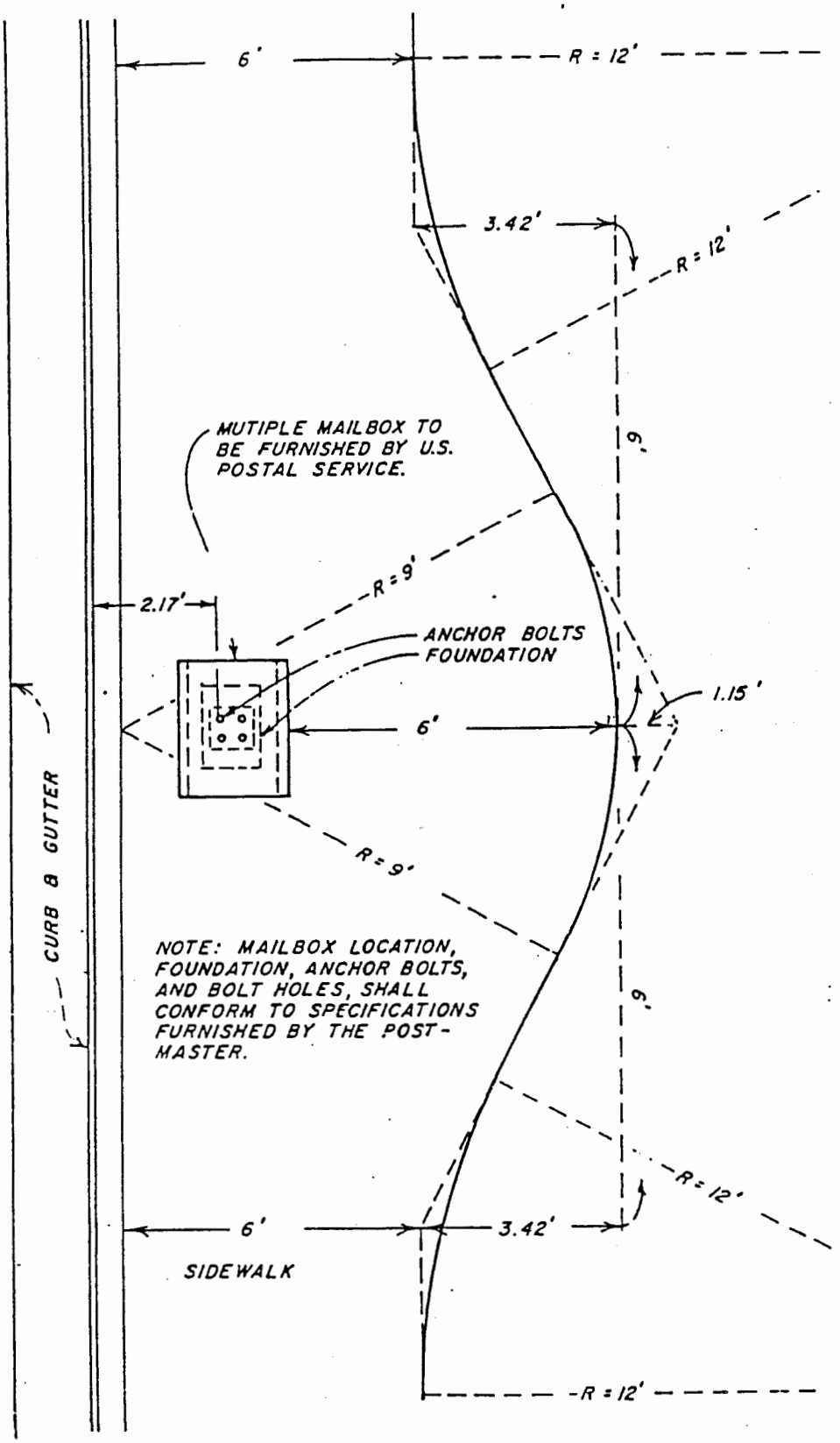

SAN BERNARDINO COUNTY ROAD DEPARTMENT DATE: RO 8-89	Ken A. Miller DIRECTOR OF TRANSPORTATION	MULTIPLE MAILBOX INSTALLATION FOR NEW SIDEWALK	312 A.

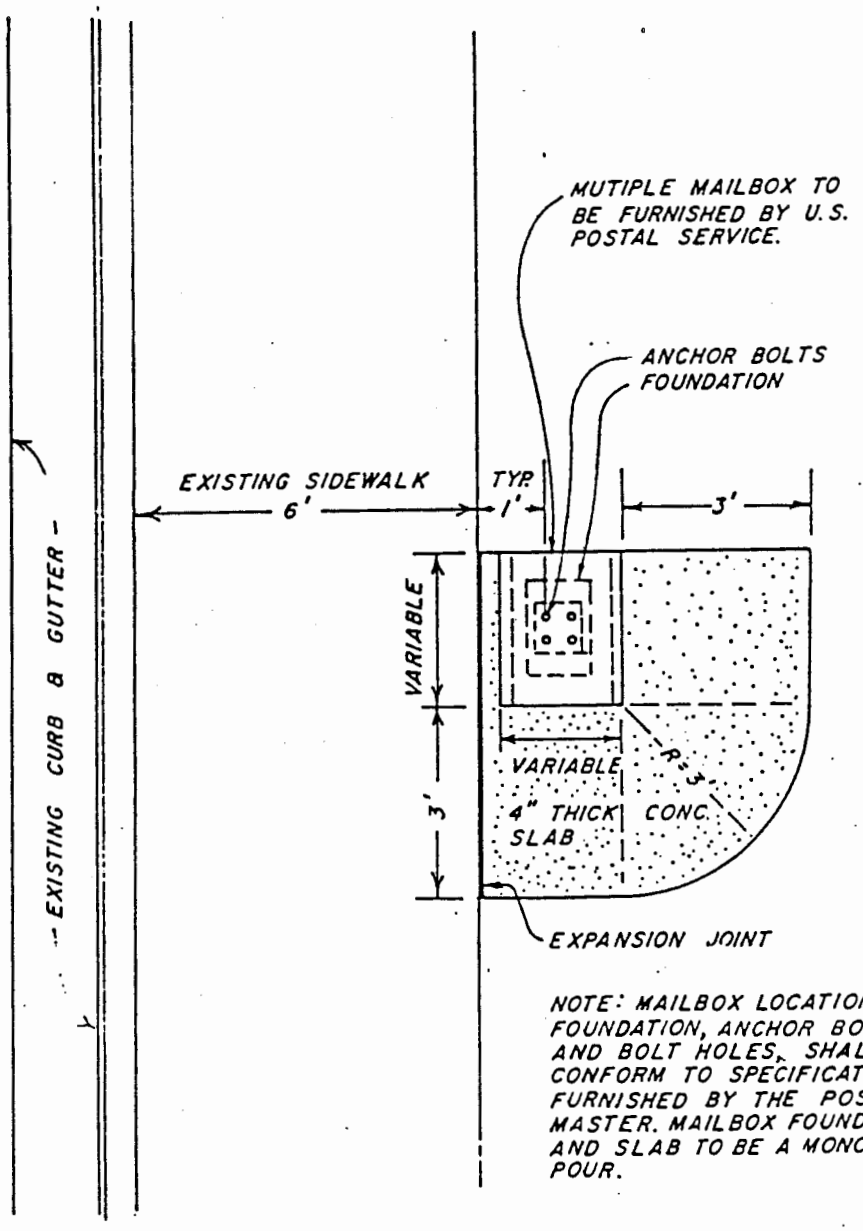

NOTE: MAILBOX LOCATION, FOUNDATION, ANCHOR BOLTS, AND BOLT HOLES, SHALL CONFORM TO SPECIFICATIONS FURNISHED BY THE POST-MASTER. MAILBOX FOUNDATION AND SLAB TO BE A MONOLITHIC POUR.

SAN BERNARDINO COUNTY ROAD DEPARTMENT		MULTIPLE MAILBOX INSTALLATION FOR EXISTING SIDEWALK	312 B.
DATE: 20 Aug 89	Ken A. Miller DIRECTOR OF TRANSPORTATION		