THIS MAP IS FOR THE PURPOSE OF AD VALOREM TAXATION ONLY.

Ptn. Tract No. 17392, M.B. 325/7-12

Mt. View Elementary
Tax Rate Area
4076

0218 - 92

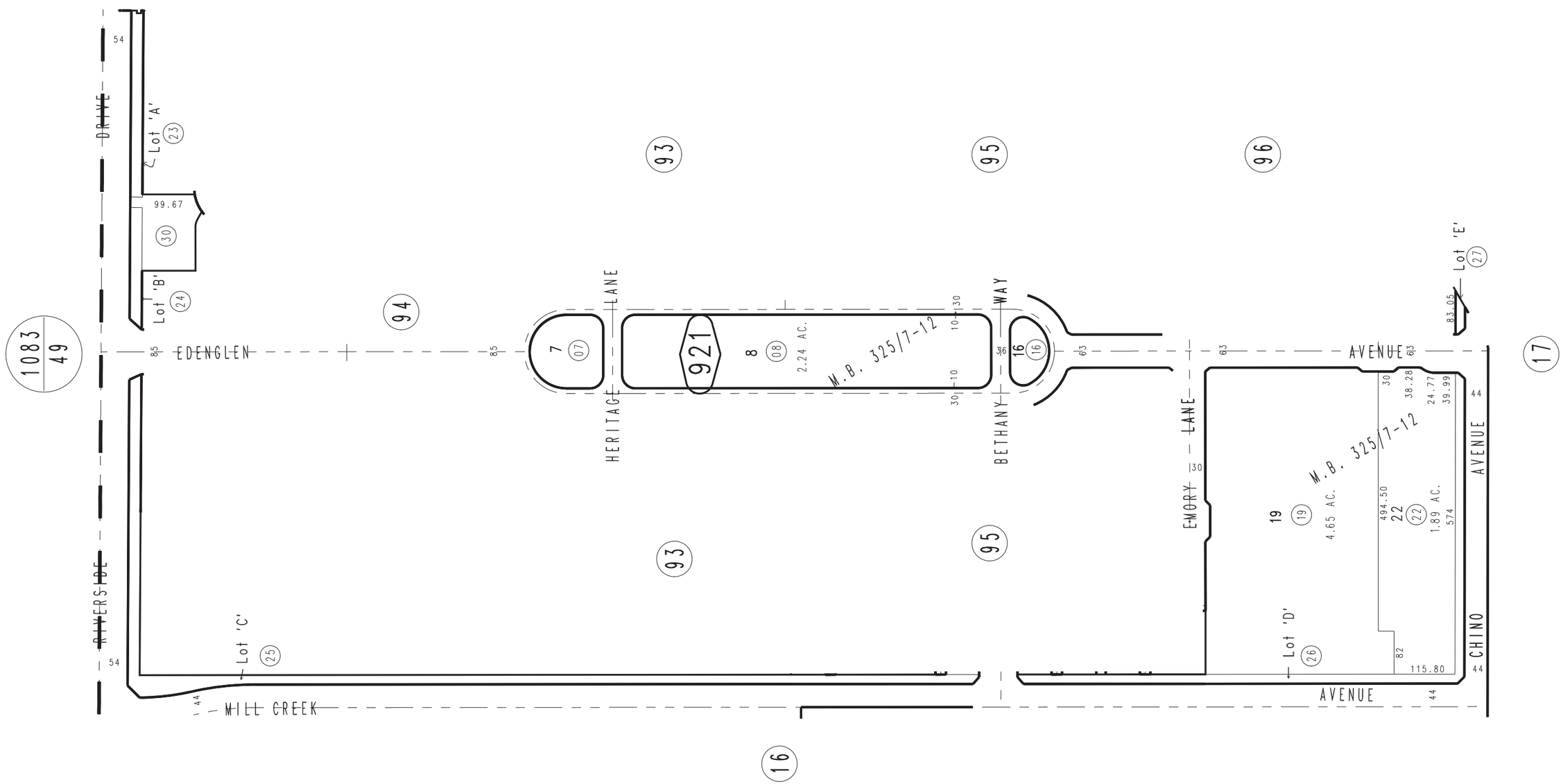

REVISED
06/12/08 LH
10/13/09 GW

JANUARY 2007 LH

Ptn. N.E.1/4, Sec. 12
T.2S., R.7W.

Assessor's Map
Book 0218 Page 92
San Bernardino County