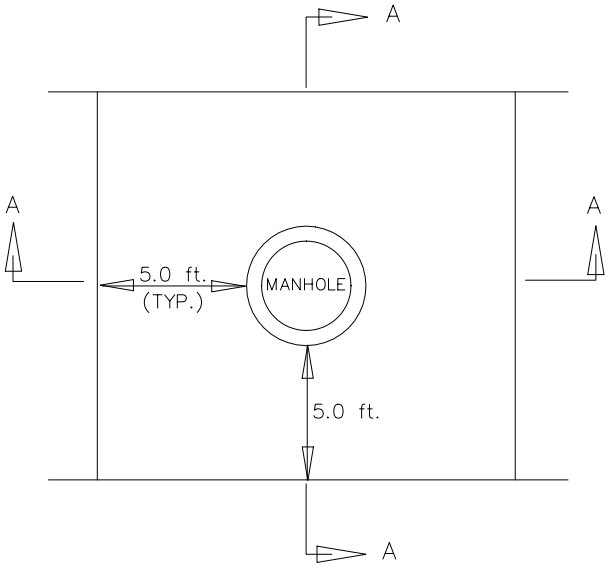

PLAN

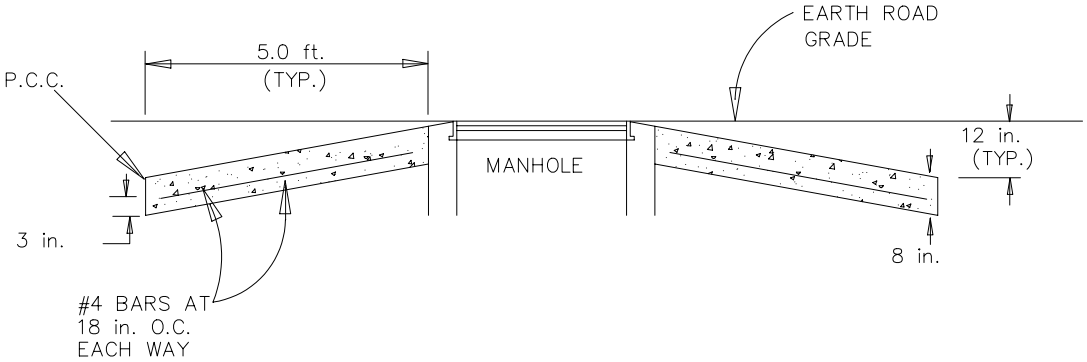

SECTION A–A

GENERAL NOTES:

1. Place #4 rebar 18 in. on center both ways.
2. Rebar shall be Grade 60.
3. Concrete shall be Class A.

NEW

N.T.S.

SAN BERNARDINO COUNTY FLOOD CONTROL DISTRICT

MANHOLE APRON

APPROVED

FLOOD CONTROL ENGINEER

DATE

STANDARD PLAN