# APPENDIX A

# Scoping Agreement

# SCOPE FOR TRAFFIC STUDY

| | |
|---|---|
| **Project Name:** | Valley Corridor Specific Plan |

This Scope for Traffic Study acknowledges San Bernardino County Department of Public Works, Traffic Division requirements of traffic impact analysis for the project and is subject to change:

| | | | |
|---|---|---|---|
| **Project Address:** | Valley Corridor, Bloomington (Alder Ave to Spruce Ave) | | |
| **Project Description:** | Specific Plan for the Redevelopment of the Valley Blvd Corridor | | |
| **City:** | Bloomington, County of San Bernardino | | |
| **Project Buildout Year:** | 2035 | **Ambient Growth Rate per Year:** | 2% |
| **Closest Intersection (Xtn) to the Project** | | | |
| **Xtn N/S Street Name:** | Alder Avenue to Cedar Avenue | | |
| **Xtn E/W Street Name:** | Valley Boulevard | | |
| **Thomas Guide Pg+Grid:** | 605+B5-E6 | **County Supervisorial District:** | 5th |

| | **Engineer** | **Developer** |
|---|---|---|
| **Company:** | Albert A. Webb Associates | County of San Bernardino |
| **Name:** | Grace Cheng | Siri Eggebraten |
| **Address:** | 3788 McCray Street | 385 N. Arrowhead Ave, 1st Fl |
| **City, State, Zip Code:** | Riverside, CA 92056 | San Bernardino, CA 92415 |
| **Phone #:** | 951-686-1070 | 909-387-4431 |
| **Fax #:** | 951-788-1256 | 909-387-3223 |
| **Email:** | Grace.cheng@webbassociates.com | Siri.eggebraten@lus.sbcounty.gov |

| | | | |
|---|---|---|---|
| **By:** | | **Reviewed By:** | |
| **Print Name: Grace Cheng** | **4/7/15** | **Print Name:** | |
| **Consultant/Developer's Representative** | **Date** | **Traffic Division Representative** | **Date** |

# SCOPE FOR TRAFFIC STUDY

| **Project Name:** | Valley Corridor Specific Plan |
|---|---|

**1. Traffic Distribution**: Please insert or attach Figure(s) illustrating project trip distribution in percentages and volumes at the study intersections analyzed.

**2. Trip Credit:** Exact amount of credit subject to approval by Traffic Division.

| | | |
|---|---|---|
| **Transportation Demand Management (TDM)** | No | |
| **Existing Active Land Use** | Yes | See attached Table 1 |
| **Previous Land Use** | No | |
| **Internal Trip Reduction** | Yes | See attached Table 2 |
| **Pass-by Trip Reduction** | Yes | See attached Table 2 |

**3. Related Projects:** Consultant should check with Planning in the San Bernardino County Department of Land Use Services and planning departments of adjoining Cities. Documentation of the consultation from these agencies shall be included in the traffic study. Related projects list shall be submitted to Traffic Division for our review and approval before being incorporated in the study.

**4. Freeway Analysis:** The potential traffic impact on the following Freeway(s) must be considered.

_____

_____

_____

The applicant shall consult with the State of California Department of Transportation (Caltrans) to determine the California Environmental Quality Act levels of significance with regard to traffic impacts on Caltrans' freeway facilities. This consultation shall also include a determination of Caltrans requirements for the study of traffic impacts to its facilities and the mitigation of any such impacts. This analysis must follow the most current Caltrans' Guide for the Preparation of Traffic Impact Studies (December 2002) and can be obtained from http://www.dot.ca.gov/hq/traffops/developserv/operationalsystems/reports/tiguide.pdf. If Caltrans finds that the project has a significant impact on the freeway, Caltrans shall be requested to include the basis for this finding in their response. If fees are proposed to mitigate the freeway impact, Caltrans shall be requested to identify the specific project to which the fees will apply. These written comments from Caltrans shall be included with the traffic study and submitted to Public Works for review and approval. If a documented good faith effort is made to consult with Caltrans and written comments cannot be obtained from within a reasonable amount of time, an analysis of the freeway impact shall be made using HCM procedures. Appendix A of the SANBAG CMP outlines allowable modifications to these procedures. The SANBAG CMP can be viewed online at:
http://www.sanbag.ca.gov/planning/subr_congestion.html

# SCOPE FOR TRAFFIC STUDY

| **Project Name:** | Valley Corridor Specific Plan |
|---|---|

**5. Trip Generation**

| **Trip Generation Rate(s) Source: ITE Trip Generation** | **I – Institute of Transportation Engineers; S – San Diego Traffic Generators; C – County; O – Other:** | **Edition:** | 9th |
|---|---|---|---|

| **Land Use Code** | **Land Use** | **Rate Based on** | **Qty** | ***AVTE vs** | **ADT** | Weekday a.m. peak | | Weekday p.m. peak | | Weekend peak hour | |
|---|---|---|---|---|---|---|---|---|---|---|---|
| | | | | | | In | Out | In | Out | In | Out |
| 110 | General Light Industrial | I | 1552 | TSF | 10,818 | 1,257 | 171 | 181 | 1325 | N/A | N/A |
| 932 | High-Turnover (Sit-Down) Restaurants | I | 78.9 | TSF | 9,187 | 330 | 288 | 95 | 72 | N/A | N/A |
| 820 | Shopping Center | I | 460.2 | TSF | 18,472 | 65 | 107 | 392 | 406 | N/A | N/A |
| 945 | Gasoline/Service Station with Convenience Market | I | 18 | VFP | 2,722 | 38 | 39 | 70 | 71 | N/A | N/A |
| 310 | Hotel | I | 100 | Rooms | 766 | 28 | 3 | 28 | 3 | N/A | N/A |
| 210 | Single-Family Detached Housing | I | 435 | DU | 3,825 | 64 | 106 | 209 | 66 | N/A | N/A |
| 230 | Residential Condominium/Townhouse | I | 340 | DU | 1,831 | 18 | 61 | 89 | 15 | N/A | N/A |
| | Mixed Use (Residential/Commercial) | S | 404 / 79.8 | DU/TSF | 10,793 | 213 | 232 | 553 | 500 | N/A | N/A |
| | | | | | | | | | | | |
| | | | | | | | | | | | |
| | | | | | | | | | | | |

* - Average Vehicle Trip Ends.
For ITE Land Uses provide number and name of Land Use. e.g. LU 814 - Variety Store

# SCOPE FOR TRAFFIC STUDY

| **Project Name:** | Valley Corridor Specific Plan |
|---|---|

**6. Study Intersections:** At minimum, the study shall include the following intersections. The list is subject to change after related projects, trip generation and distribution are determined. Consultant should check with adjoining Cities regarding their requirements in addition to the following County/City intersections. Documentation of the consultation from these agencies shall be included in the traffic study.

| Xtn # | % County | Thomas Guide Page+Grid | N/S / E/W Street Name | City | Signalized | CMP |
|---|---|---|---|---|---|---|
| 1 | 0 | 604+J5 | Sierra Avenue (NS) / San Bernardino (EW) | Fontana | Yes | Yes |
| 2 | 0 | 604+J6 | Sierra Avenue (NS) / Valley Boulevard (EW) | Fontana | Yes | No |
| 3 | 0 | 604+J6 | Sierra Avenue (NS) / I-10 Ramps (EW) | Caltrans | Yes | No |
| 4 | 0 | 604+J7 | Sierra Avenue (NS) / Slover Avenue (EW) | Fontana | Yes | Yes |
| 5 | 0 | 605+A6 | Palmetto Avenue (NS) / Valley Boulevard (EW) | Fontana | Yes | No |
| 6 | 25 | 605+B5 | Alder Avenue (NS) / San Bernardino (EW) | Fontana, County | Yes | Yes |
| 7 | 50 | 605+B5 | Alder Avenue (NS) / Marygold Avenue (EW) | Fontana, County | No | No |
| 8 | 75 | 605+B6 | Alder Avenue (NS) / Valley Boulevard (EW) | Fontana, County | Yes | Yes |
| 9 | 100 | 605+C5 | Locust Avenue (NS) / Marygold Avenue (EW) | County | No | No |
| 10 | 100 | 605+C6 | Locust Avenue (NS) / Valley Boulevard (EW) | County | Yes | Yes |
| 11 | 100 | 605+E5 | Cedar Avenue (NS) / San Bernardino (EW) | County | Yes | No |
| 12 | 100 | 605+E6 | Cedar Avenue (NS) / Bloomington Avenue (EW) | County | Yes | No |
| 13 | 100 | 605+E6 | Cedar Avenue (NS) / Valley Boulevard (EW) | County | Yes | No |
| 14 | 0 | 605+E6 | Cedar Avenue (NS) / I-10 Westbound Ramps (EW) | Caltrans | Yes | No |
| 15 | 0 | 605+E6 | Cedar Avenue (NS) / I-10 Eastbound Ramps (EW) | Caltrans | Yes | No |
| 16 | 100 | 605+E7 | Cedar Avenue (NS) / Slover Avenue (EW) | County | Yes | No |

Cites to be consulted: City of Fontana, City of Rialto, Caltrans

**7. Other:**

| Traffic counts may be conducted immediately per the following: |
|---|
| • Must be taken on Tuesdays, Wednesdays or Thursdays. |
| • Must exclude holidays, and the first weekdays before and after the holiday. |
| • Must be taken on days when local schools or colleges are in session. |
| • Must be taken on days of good weather, and avoid atypical conditions (e.g., road construction, detours, or major traffic incidents). |
| • Traffic counts used for other traffic studies in the area shall **NOT** be reused again, unless 25% of the counts conducted for that particular traffic study are validated with new counts. The difference in volumes between the old and new counts at each corresponding movement should not be more than 10%. |
| • New traffic counts shall be checked to ensure the difference in volumes at corresponding approaches, if applicable, between two adjacent intersections is no more than 10% unless the difference can be justified. |
| • For all proposed mitigation measures, a conceptual plan for the improvements shall be submitted to our Traffic Studies section for review and approval prior to the approval of the Traffic Impact Analysis. All proposed improvements shall be within the right-of-way. |
| • For all cumulative mitigation measures, a cost estimate for the improvement shall be submitted. |

This analysis must follow the most current Traffic Impact Study Guidelines for the County as stated in the County's Road Planning and Design Standards.

**8. Fees**

The County charges on an actual cost basis for review of traffic studies. An initial deposit of $3400 is required at the time that a land use application is filed with the Department of Land Use Services If the review costs exceed the initial deposit, the applicant will be expected to provide additional funds and the review will be suspended until the additional funds are deposited.

**9. Contact Information:**

*Please submit a signed copy of* this scope for approval by the Traffic Division. Draft scopes may be sent electronically. Final scope with signature should be submitted in person or by US Mail to:

County of San Bernardino
Dept. of Public Works, Traffic Division
825 E. 3rd Street, Rm 115
San Bernardino, CA 92415-0835

Phone: 909-387-8186
Fax: 909-387-7809
Email: epetre@dpw.sbcounty.gov (Ed Petre)

# SCOPE FOR TRAFFIC STUDY

| **Project Name:** | Valley Corridor Specific Plan |
|---|---|

Table 1: Existing Land Use Trip Generation

| Land Use | Qty | Unit | AM Peak Hour | | | PM Peak Hour | | | Daily |
|---|---|---|---|---|---|---|---|---|---|
| | | | Total | In | Out | Total | In | Out | |
| Automobile Care Center | 48.912 | TSF | 110 | 73 | 37 | 152 | 73 | 79 | 341 |
| Automobile Sales | 22.093 | TSF | 42 | 31 | 11 | 58 | 23 | 35 | 714 |
| Church | 11.2 | TSF | 6 | 4 | 2 | 6 | 3 | 3 | 102 |
| Mini-Warehouse | 270.18 | TSF | 38 | 21 | 17 | 70 | 35 | 35 | 675 |
| Recreational Community Center | 29.8 | TSF | 61 | 40 | 21 | 82 | 40 | 42 | 1,008 |
| General Office Building | 12.5 | TSF | 20 | 18 | 2 | 19 | 3 | 16 | 138 |
| *Internal Trips* | | | *-2* | *-2* | *0* | *-4* | *0* | *-4* | *-6* |
| Land Use Total | | | 18 | 16 | 2 | 15 | 3 | 12 | 132 |
| General Light Industrial | 401.54 | TSF | 369 | 325 | 44 | 389 | 47 | 342 | 2,799 |
| Mobile Home Park | 15.5 | Acres | 50 | 9 | 41 | 69 | 43 | 26 | 614 |
| Apartments | 80 | DU | 41 | 8 | 33 | 50 | 32 | 18 | 532 |
| *Internal Trips* | | | *-10* | *-2* | *-8* | *-16* | *-5* | *-11* | *-26* |
| Land Use Total | | | 31 | 6 | 25 | 34 | 27 | 7 | 506 |
| Hotel | 30 | Rooms | 16 | 9 | 7 | 18 | 9 | 9 | 245 |
| Nursery (Garden Center) | 2.24 | TSF | 5 | 2 | 3 | 16 | 8 | 8 | 153 |
| City Park | 6 | Acres | 27 | 15 | 12 | 21 | 12 | 9 | 11 |
| High-Turnover (Sit-Down) Restaurant | 19.893 | TSF | 215 | 118 | 97 | 196 | 118 | 78 | 2,529 |
| *Internal Trips* | | | *-53* | *-29* | *-24* | *-117* | *-71* | *-46* | *-170* |
| *Pass-by Trips (PM Peak 43%)* | | | | | | *-34* | *-20* | *-14* | *-34* |
| Land Use Total | | | 162 | 89 | 73 | 45 | 27 | 18 | 2,325 |
| Shopping Center | 91.4 | TSF | 88 | 55 | 33 | 339 | 163 | 176 | 3,903 |
| *Internal Trips* | | | *-58* | *-41* | *-17* | *-155* | *-84* | *-71* | *-213* |
| *Pass-by Trips (PM Peak 34%)* | | | | | | *-63* | *-27* | *-36* | *-63* |
| Land Use Total | | | 30 | 14 | 16 | 121 | 52 | 69 | 3,627 |
| Gasoline/Service Station with Convenience Market | 18 | VFP | 183 | 91 | 92 | 243 | 121 | 122 | 2,930 |
| *Pass-by Trips (AM Peak 58%)(PM Peak 42%)* | | | *-106* | *-53* | *-53* | *-102* | *-51* | *-51* | *-208* |
| Land Use Total | | | 77 | 38 | 39 | 141 | 70 | 71 | 2,722 |
| Single-Family Detached Housing | 267 | DU | 200 | 50 | 150 | 267 | 168 | 99 | 2,542 |
| *Internal Trips* | | | *-49* | *-12* | *-37* | *-86* | *-29* | *-57* | *-135* |
| Land Use Total | | | 151 | 38 | 113 | 181 | 139 | 42 | 2,407 |
| EXISTING LAND USE TOTAL | | | 1,242 | 742 | 500 | 1,504 | 640 | 864 | 18,516 |

TSF = 1,000 Square Feet Gross Floor Area, DU = Dwelling Units, VFP = Vehicle Fueling Positions.
Internal Trips calculated based on Trip Generation Handbook, 3rd Edition, Table 6.1 & Table 6.2
Note that the open storage land use is not included in the trip generation for a conservative trip generation.

# SCOPE FOR TRAFFIC STUDY

| **Project Name:** | Valley Corridor Specific Plan |
|---|---|

Table 2: Proposed Land Use Trip Generation

| Land Use | Qty | Unit | AM Peak Hour | | | PM Peak Hour | | | Daily |
|---|---|---|---|---|---|---|---|---|---|
| | | | Total | In | Out | Total | In | Out | |
| General Light Industrial | 1552.1 | TSF | 1,428 | 1,257 | 171 | 1,506 | 181 | 1,325 | 10,818 |
| High-Turnover (Sit-Down) Restaurant | 78.898 | TSF | 853 | 469 | 384 | 777 | 466 | 311 | 10,032 |
| *Internal Trips* | | | *-235* | *-139* | *-96* | *-484* | *-299* | *-185* | *-719* |
| *Pass-by Trips (PM Peak 43%)* | | | | | | *-126* | *-72* | *-54* | *-126* |
| Land Use Total | | | 618 | 330 | 288 | 167 | 95 | 72 | 9,187 |
| Shopping Center | 460.21 | TSF | 442 | 274 | 168 | 1,707 | 819 | 888 | 19,651 |
| *Internal Trips* | | | *-270* | *-209* | *-61* | *-498* | *-225* | *-273* | *-768* |
| *Pass-by Trips (PM Peak 34%)* | | | | | | *-411* | *-202* | *-209* | *-411* |
| Land Use Total | | | 172 | 65 | 107 | 798 | 392 | 406 | 18,472 |
| Gasoline/Service Station with Convenience Market | 18 | VFP | 183 | 91 | 92 | 243 | 121 | 122 | 2,930 |
| *Pass-by Trips (AM Peak 58%)(PM Peak 42%)* | | | *-106* | *-53* | *-53* | *-102* | *-51* | *-51* | *-208* |
| Land Use Total | | | 77 | 38 | 39 | 141 | 70 | 71 | 2,722 |
| Hotel | 100 | Rooms | 53 | 31 | 22 | 60 | 31 | 29 | 817 |
| *Internal Trips* | | | *-22* | *-3* | *-19* | *-29* | *-3* | *-26* | *-51* |
| Land Use Total | | | 31 | 28 | 3 | 31 | 28 | 3 | 766 |
| Single-Family Detached Housing | 435 | DU | 326 | 82 | 244 | 435 | 274 | 161 | 4,141 |
| *Internal Trips* | | | *-156* | *-18* | *-138* | *-160* | *-65* | *-95* | *-316* |
| Land Use Total | | | 170 | 64 | 106 | 275 | 209 | 66 | 3,825 |
| Residential Condominium/Townhouse | 340 | DU | 150 | 26 | 124 | 177 | 119 | 58 | 1,975 |
| *Internal Trips* | | | *-71* | *-8* | *-63* | *-73* | *-30* | *-43* | *-144* |
| Land Use Total | | | 79 | 18 | 61 | 104 | 89 | 15 | 1,831 |
| Mixed Use: Residential[1] | 404 | DU | 182 | 55 | 127 | 263 | 158 | 105 | 2,020 |
| Mixed Use: Commercial[1] | 79.756 | TSF | 263 | 158 | 105 | 790 | 395 | 395 | 8,773 |
| PROPOSED LAND USE TOTAL | | | 3,020 | 2,013 | 1,007 | 4,075 | 1,617 | 2,458 | 58,414 |

TSF = 1,000 Square Feet Gross Floor Area, DU = Dwelling Units, VFP = Vehicle Fueling Positions.
Internal Trips calculated based on Trip Generation Handbook, 3rd Edition, Table 6.1 & Table 6.2
[1] Trip Generation from SanDAG Vehicular Traffic Generation Rates

Table 3: Trip Generation Difference

| Land Use | AM Peak Hour | | | PM Peak Hour | | | Daily |
|---|---|---|---|---|---|---|---|
| | Total | In | Out | Total | In | Out | |
| Existing Land Use Total | 1,242 | 742 | 500 | 1,504 | 640 | 864 | 18,516 |
| Proposed Land Use Total | 3,020 | 2,013 | 1,007 | 4,075 | 1,617 | 2,458 | 58,414 |
| DIFFERENCE | 1,778 | 1,271 | 507 | 2,571 | 977 | 1,594 | 39,898 |

**Figure 1 – Directional Distribution (Residential)**

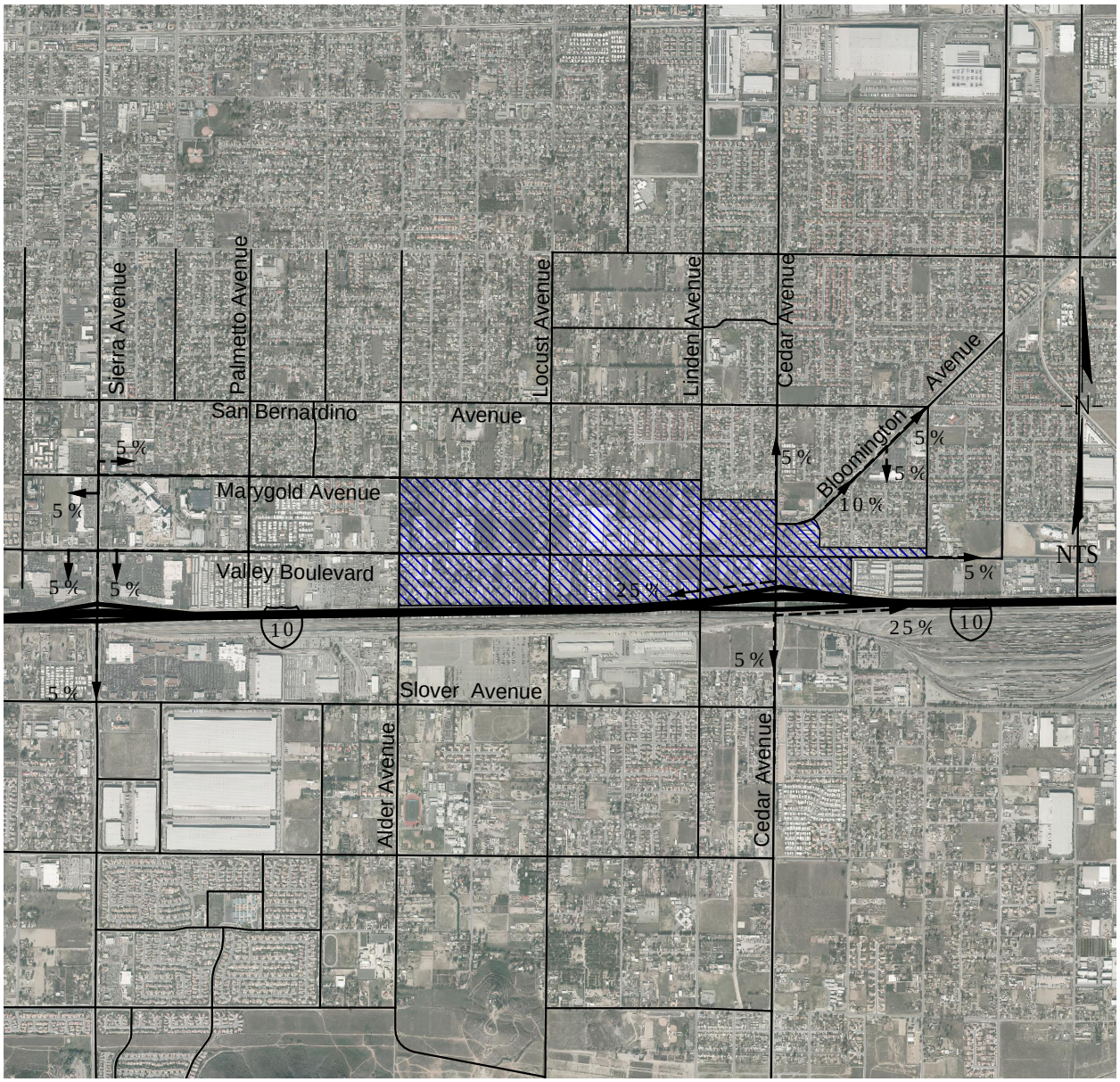


LEGEND

Project Site

Future Roadway

G:\2013\13-0336\Traffic\20130336 Valley Blvd Corridor.dwg | 2/24/2011 | 11:42

**Figure 2 – Directional Distribution (Commercial)**

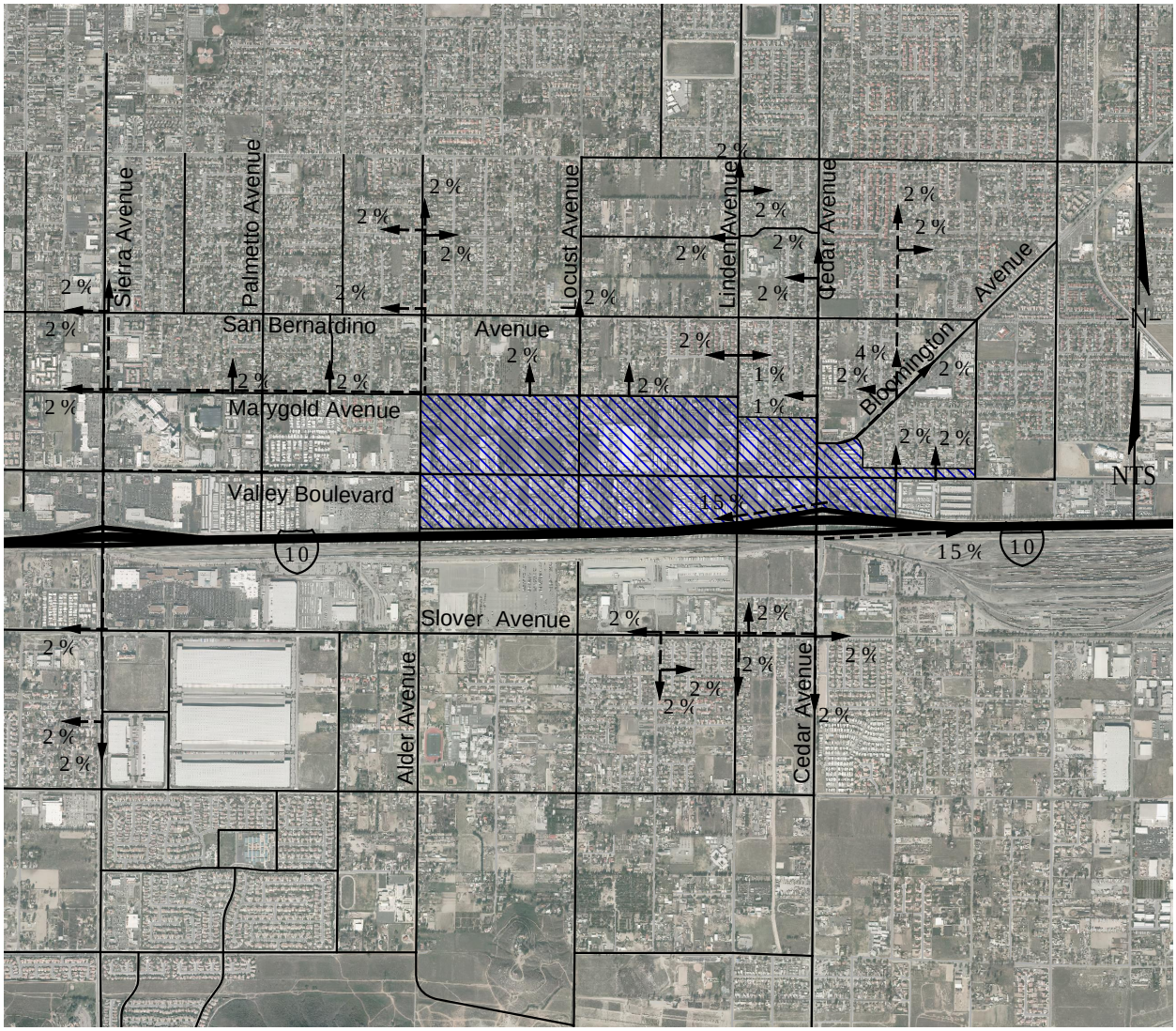


LEGEND

Project Site

Future Roadway

G:\2013\13-0336\Traffic\20130336 Valley Blvd Corridor.dwg | 2/24/2011 | 11:42

**Figure 3 – Directional Distribution (Business Park)**

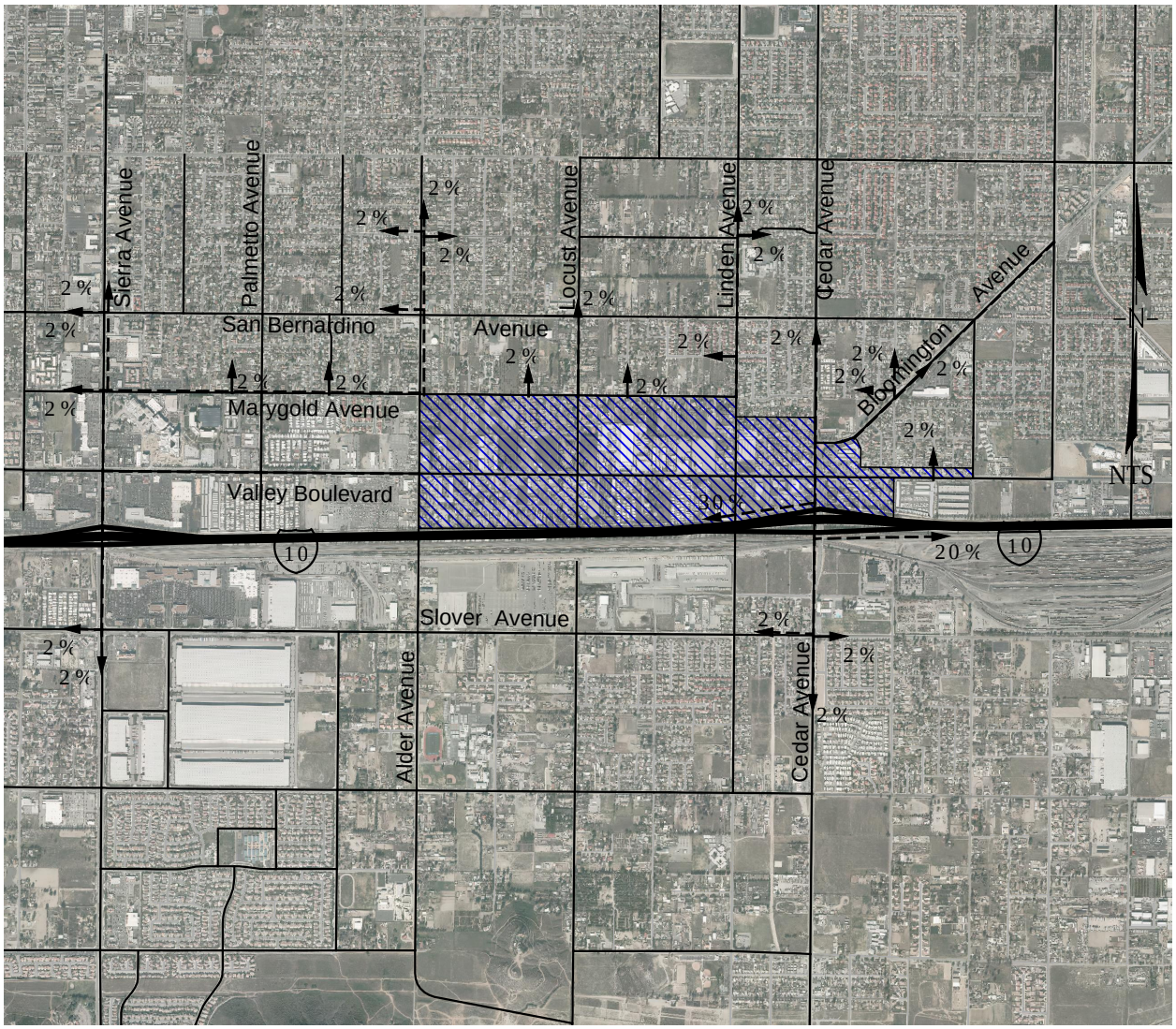


LEGEND

Project Site

Future Roadway

G:\2013\13-0336\Traffic\20130336 Valley Blvd Corridor.dwg | 2/24/2011 | 11:42

| EXISTING LAND USE | | | | | | | | | | | |
|---|---|---|---|---|---|---|---|---|---|---|---|
| **LAND USE** | **Acres** | **Units** | **SFD** | **MF** | **MH** | **TH** | **Pop** | **Stud** | **Hotel** | **Nonres BSF** | **Emp** |
| Auto Repair/ Services | 4.3 | | | | | | | | | 48,912 | 44 |
| Auto Sales | 9.0 | | | | | | | | | 22,093 | 23 |
| Church | 0.6 | | | | | | | | | 11,262 | 8 |
| Commercial Storage | 15.3 | | | | | | | | | 270,176 | 30 |
| Community Facility | 2.5 | | | | | | | | | 29,804 | 32 |
| Easement | 6.3 | | | | | | | | | | |
| Flood Control Channel | 7.4 | | | | | | | | | | |
| General Office | 1.1 | | | | | | | | | 12,524 | 11 |
| Industrial | 38.6 | | | | | | | | | 401,539 | 174 |
| Mobile Home | 15.5 | 178 | | | 178 | | 790 | 79 | | | |
| Multi Family | 4.2 | 80 | | 80 | | | 240 | 35 | 30 | | |
| Nursery | 2.4 | | | | | | | | | 2,241 | 2 |
| Open Storage | 25.2 | | | | | | | | | 16,967 | 14 |
| Parking | 0.9 | | | | | | | | | 692 | 1 |
| Parks | 6.0 | | | | | | | | | 10,810 | 5 |
| Restaurant/Bar | 3.1 | | | | | | | | | 19,893 | 20 |
| Retail Store/Service | 11.1 | | | | | | | | | 91,400 | 82 |
| Service Station | 1.2 | | | | | | | | | 8,347 | 7 |
| Single Family Detached | 126.6 | 267 | 267 | | | | 1,185 | 219 | | 9,850 | 10 |
| Vacant | 26.7 | | | | | | | | | 18,600 | 14 |
| **Total** | **308** | **525** | **267** | **80** | **178** | | **2,216** | **333** | **30** | **975,109** | **477** |

**ASSUMPTIONS:**
**Residential Units:** based on actual count data gathered through aerial analysis and site visits.
Population: 4.44 persons per household for single family; 3.00 persons per household for apartments based on 2013 US Census estimates
**Nonresidential Square Footage:** based on 2012 Assessor data and aerial analysis and site visits between 2013-15
**Employment:** The following employment generation factors (square feet per employee) were used and checked against the latest employment data from the US Census (2011 Longitudinal Employer-Household Dynamics)

- Commercial Storage: 10,000
- Industrial: 2,500
- Auto Repair/Services/Sales, General Office, Restaurant/Bar, Retail Store/Service, Service Station: 1,250
- Church/Community Facility/Nursery: 1,500
- Single Family Detached: 1,250 (only applies to nonresidential buildings on single family parcels)

**Student Generation Factors (SGF):**
Single Family Detached: SGF=0.8217
Multi Family: SGF= 0.4422
Townhomes: SGF= 0.6320 (Avg. of SFD and MF)

**Hotel:**
Number of hotel rooms based on site visits conducted in 2015

SFD=Single Family Detached MF=Multi Family MH-Mobile Homes TH-Townhomes
Pop=Population Stud=Students Emp=Employees
Nonres BSF= Nonresidential Building Square Footage

**Additional Notes:**
1. The project boundary also includes 58 acres of unparcelized right-of-way (ROW); gross project boundary including ROW is 366 acres.
2. Figures subject to rounding.

| PROPOSED LAND USE | | | | | | | | | | | |
|---|---|---|---|---|---|---|---|---|---|---|---|
| **LAND USE** | **Acres** | **Units** | **SFD** | **MF** | **MH** | **TH** | **Pop** | **Stud** | **Hotel** | **Nonres BSF** | **Emp** |
| **Business Park** | **114.2** | | | | | | | | | **1,741,694** | **1,393** |
| Gen Office/Light Industrial | 101.8 | | | | | | | | | 1,552,133 | 1,242 |
| *Restaurant | 1.7 | | | | | | | | | 26,056 | 21 |
| *Retail Sales/Service | 10.7 | | | | | | | | | 163,506 | 131 |
| **Commercial** | **51.6** | | | | | | | | **100** | **662,400** | **787** |
| Gas Station/Convenience | 1.4 | | | | | | | | | 15,714 | 26 |
| *Gen Office/Light Industrial | 16.5 | | | | | | | | | 246,623 | 95 |
| Hotel | 1.6 | | | | | | | | 100 | 50,529 | 84 |
| Restaurant | 4.9 | | | | | | | | | 52,842 | 88 |
| Retail Sales/Service | 27.2 | | | | | | | | | 296,691 | 494 |
| **Low & Med Residential** | **84.7** | **435** | **435** | | | | **1,931** | **357** | | **66,466** | **7** |
| Single Family Detached | 84.7 | 435 | 435 | | | | 1,931 | 357 | | 66,466 | 7 |
| **Med & High Residential** | **17.4** | **340** | | | | **340** | **1,190** | **220** | | | |
| Condo/Townhouse | 17.4 | 340 | | | | **340** | 1,190 | 220 | | | |
| **Mixed Use** | **26.1** | **404** | | **404** | | | **1,252** | **179** | | **79,756** | **134** |
| MF/Retail Sales/Service | 26.1 | 404 | | 404 | | | 1,252 | 179 | | 79,756 | 134 |
| **Easement** | **6.3** | | | | | | | | | | |
| **Flood Control Channel** | **7.4** | | | | | | | | | | |
| **Total** | **308** | **1,179** | **435** | **404** | | **340** | **4,374** | **756** | **100** | **2,550,316** | **2,322** |

**ASSUMPTIONS:**
**Residential Units:** The following density assumptions were used.
- Low & Medium Residential: 6 units per acre
- Medium & High Residential: 20 units per acre
- Mixed Use: 20 units per acre

**Population:** The following household size assumptions were used.
- Low & Medium Residential: 4.44 persons per household
- Medium & High Residential: 3.50 persons per household
- Mixed Use: 3.10 persons per household

**Nonresidential Square Footage:** The following intensities were used: Business Park 0.35 floor area ratio, Commercial 0.25 floor area ratio, Mixed Use 0.25 floor area ratio

**Employment:** The following employment generation factors (EGF) were used: Business Park 1,250 square feet per employee, Commercial 600 square feet per employee, Mixed Use 500 square feet per employee.
*Exceptions include restaurant and retail sales/service under Business Park (EGF = 1,250) and general office/light industrial under Commercial (EGF = 600).

**Student Generation Factors (SGF):**
Single Family Detached: SGF=0.8217
Multi Family: SGF=0.4422
Townhomes: SGF=0.6320 (Avg. of SFD and MF)

**Hotel:**
Assumes one, 100-room business class hotel.

SFD=Single Family Detached MF=Multi Family MH-Mobile Homes TH-Townhomes
Pop=Population Stud=Students Emp=Employees
Nonres BSF= Nonresidential Building Square Footage

**Additional Notes:**
1. The project boundary also includes 58 acres of unparcelized right-of-way (ROW); gross project boundary including ROW is 366 acres.
2. All figures subject to rounding.

# APPENDIX B

# Traffic Count Worksheets

Counts Unlimited Inc.
PO Box 1178
Corona, CA 92878
(951) 268-6268

City of Fontana
N/S: Sierra Avenue
E/W: San Bernardino Avenue
Weather: Sunny

File Name : FONSISBAM
Site Code : 00000001
Start Date : 5/23/2012
Page No : 2

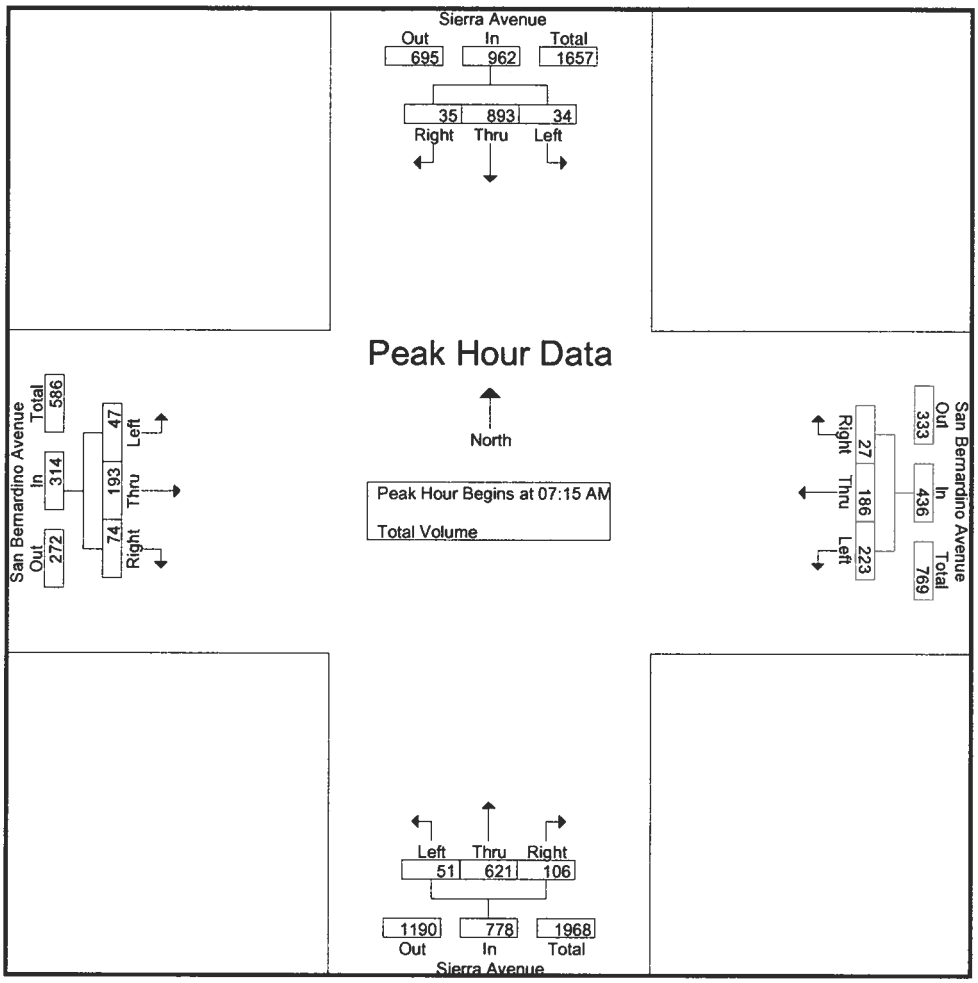


Peak Hour Analysis From 07:00 AM to 08:45 AM - Peak 1 of 1

Peak Hour for Each Approach Begins at:

| | 07:15 AM | | | | 07:00 AM | | | | 08:00 AM | | | | 07:00 AM | | | |
|---|---|---|---|---|---|---|---|---|---|---|---|---|---|---|---|---|
| +0 mins. | 8 | **243** | **12** | **263** | 55 | **95** | 4 | **154** | 10 | 153 | **31** | 194 | 13 | 39 | 18 | 70 |
| +15 mins. | 6 | 236 | 12 | 254 | **61** | 79 | **7** | 147 | 19 | 161 | 26 | 206 | 12 | **55** | **22** | **89** |
| +30 mins. | 2 | 181 | 7 | 190 | 59 | 41 | 4 | 104 | 14 | 165 | 18 | 197 | **17** | 49 | 19 | 85 |
| +45 mins. | **18** | 233 | 4 | 255 | 54 | 37 | 7 | 98 | **22** | **188** | 26 | **236** | 8 | 53 | 18 | 79 |
| Total Volume | 34 | 893 | 35 | 962 | 229 | 252 | 22 | 503 | 65 | 667 | 101 | 833 | 50 | 196 | 77 | 323 |
| % App. Total | 3.5 | 92.8 | 3.6 | | 45.5 | 50.1 | 4.4 | | 7.8 | 80.1 | 12.1 | | 15.5 | 60.7 | 23.8 | |
| PHF | .472 | .919 | .729 | .914 | .939 | .663 | .786 | .817 | .739 | .887 | .815 | .882 | .735 | .891 | .875 | .907 |

Counts Unlimited Inc.
PO Box 1178
Corona, CA 92878
(951) 268-6268

City of Fontana
N/S: Sierra Avenue
E/W: San Bernardino Avenue
Weather: Sunny

File Name : FONSISBAM
Site Code : 00000001
Start Date : 5/23/2012
Page No : 1

Groups Printed- Total Volume

| | Sierra Avenue Southbound | | | | San Bernardino Avenue Westbound | | | | Sierra Avenue Northbound | | | | San Bernardino Avenue Eastbound | | | | |
|---|---|---|---|---|---|---|---|---|---|---|---|---|---|---|---|---|---|
| Start Time | Left | Thru | Right | App. Total | Left | Thru | Right | App. Total | Left | Thru | Right | App. Total | Left | Thru | Right | App. Total | Int. Total |
| 07:00 AM | 4 | 190 | 10 | 204 | 55 | 95 | 4 | 154 | 7 | 90 | 6 | 103 | 13 | 39 | 18 | 70 | 531 |
| 07:15 AM | 8 | 243 | 12 | 263 | 61 | 79 | 7 | 147 | 12 | 152 | 27 | 191 | 12 | 55 | 22 | 89 | 690 |
| 07:30 AM | 6 | 236 | 12 | 254 | 59 | 41 | 4 | 104 | 17 | 146 | 20 | 183 | 17 | 49 | 19 | 85 | 626 |
| 07:45 AM | 2 | 181 | 7 | 190 | 54 | 37 | 7 | 98 | 12 | 170 | 28 | 210 | 8 | 53 | 18 | 79 | 577 |
| Total | 20 | 850 | 41 | 911 | 229 | 252 | 22 | 503 | 48 | 558 | 81 | 687 | 50 | 196 | 77 | 323 | 2424 |
| 08:00 AM | 18 | 233 | 4 | 255 | 49 | 29 | 9 | 87 | 10 | 153 | 31 | 194 | 10 | 36 | 15 | 61 | 597 |
| 08:15 AM | 9 | 190 | 9 | 208 | 57 | 31 | 8 | 96 | 19 | 161 | 26 | 206 | 3 | 35 | 27 | 65 | 575 |
| 08:30 AM | 12 | 241 | 5 | 258 | 41 | 40 | 7 | 88 | 14 | 165 | 18 | 197 | 10 | 29 | 31 | 70 | 613 |
| 08:45 AM | 13 | 212 | 2 | 227 | 48 | 29 | 7 | 84 | 22 | 188 | 26 | 236 | 18 | 48 | 19 | 85 | 632 |
| Total | 52 | 876 | 20 | 948 | 195 | 129 | 31 | 355 | 65 | 667 | 101 | 833 | 41 | 148 | 92 | 281 | 2417 |
| Grand Total | 72 | 1726 | 61 | 1859 | 424 | 381 | 53 | 858 | 113 | 1225 | 182 | 1520 | 91 | 344 | 169 | 604 | 4841 |
| Apprch % | 3.9 | 92.8 | 3.3 | | 49.4 | 44.4 | 6.2 | | 7.4 | 80.6 | 12 | | 15.1 | 57 | 28 | | |
| Total % | 1.5 | 35.7 | 1.3 | 38.4 | 8.8 | 7.9 | 1.1 | 17.7 | 2.3 | 25.3 | 3.8 | 31.4 | 1.9 | 7.1 | 3.5 | 12.5 | |

| | Sierra Avenue Southbound | | | | San Bernardino Avenue Westbound | | | | Sierra Avenue Northbound | | | | San Bernardino Avenue Eastbound | | | | |
|---|---|---|---|---|---|---|---|---|---|---|---|---|---|---|---|---|---|
| Start Time | Left | Thru | Right | App. Total | Left | Thru | Right | App. Total | Left | Thru | Right | App. Total | Left | Thru | Right | App. Total | Int. Total |
| Peak Hour Analysis From 07:00 AM to 08:45 AM - Peak 1 of 1 | | | | | | | | | | | | | | | | | |
| Peak Hour for Entire Intersection Begins at 07:15 AM | | | | | | | | | | | | | | | | | |
| 07:15 AM | 8 | **243** | **12** | **263** | **61** | **79** | 7 | **147** | 12 | 152 | 27 | 191 | 12 | **55** | **22** | **89** | **690** |
| 07:30 AM | 6 | 236 | 12 | 254 | 59 | 41 | 4 | 104 | **17** | 146 | 20 | 183 | **17** | 49 | 19 | 85 | 626 |
| 07:45 AM | 2 | 181 | 7 | 190 | 54 | 37 | 7 | 98 | 12 | **170** | 28 | **210** | 8 | 53 | 18 | 79 | 577 |
| 08:00 AM | **18** | 233 | 4 | 255 | 49 | 29 | **9** | 87 | 10 | 153 | **31** | 194 | 10 | 36 | 15 | 61 | 597 |
| Total Volume | 34 | 893 | 35 | 962 | 223 | 186 | 27 | 436 | 51 | 621 | 106 | 778 | 47 | 193 | 74 | 314 | 2490 |
| % App. Total | 3.5 | 92.8 | 3.6 | | 51.1 | 42.7 | 6.2 | | 6.6 | 79.8 | 13.6 | | 15 | 61.5 | 23.6 | | |
| PHF | .472 | .919 | .729 | .914 | .914 | .589 | .750 | .741 | .750 | .913 | .855 | .926 | .691 | .877 | .841 | .882 | .902 |

Counts Unlimited Inc.
PO Box 1178
Corona, CA 92878
(951) 268-6268

City of Fontana
N/S: Sierra Avenue
E/W: San Bernardino Avenue
Weather: Sunny

File Name : FONSISBPM
Site Code : 00000001
Start Date : 5/23/2012
Page No : 2

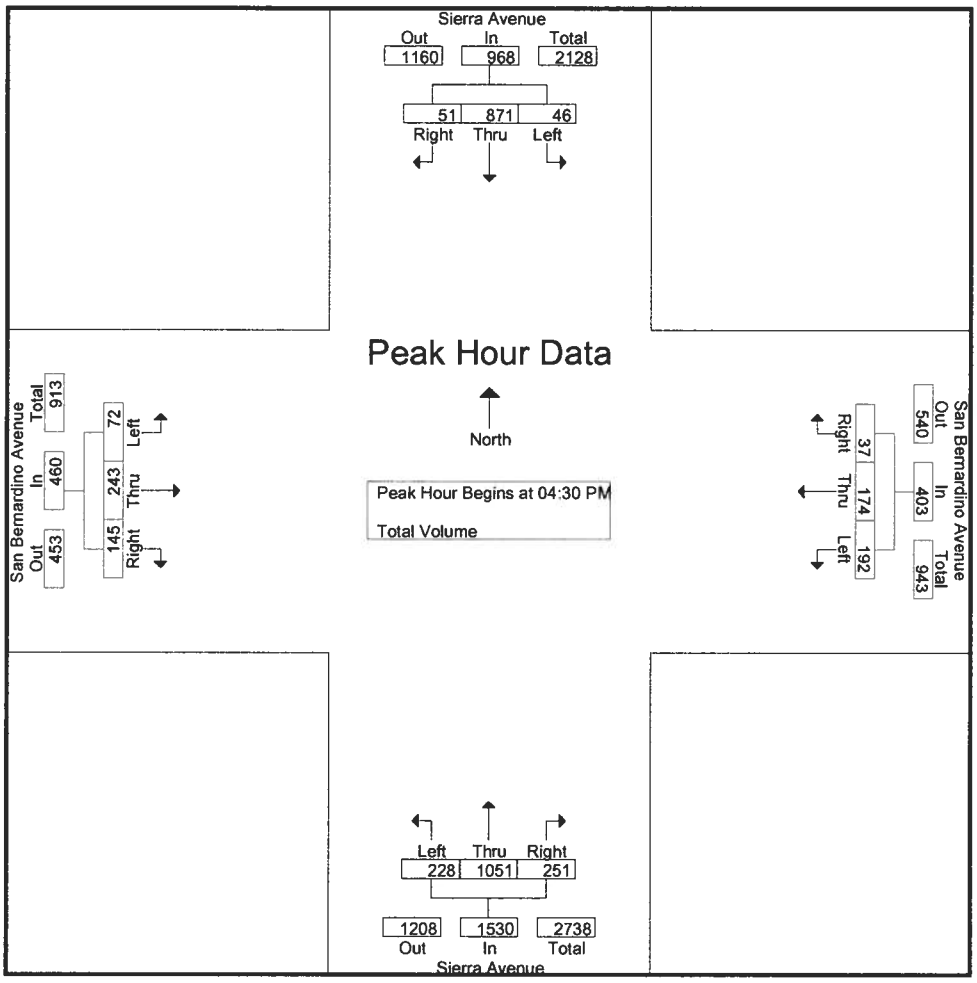


Peak Hour Analysis From 04:00 PM to 05:45 PM - Peak 1 of 1

Peak Hour for Each Approach Begins at:

| | 04:30 PM | | | | 04:30 PM | | | | 04:30 PM | | | | 04:45 PM | | | |
|---|---|---|---|---|---|---|---|---|---|---|---|---|---|---|---|---|
| +0 mins. | **14** | 208 | 14 | 236 | 42 | 39 | **12** | 93 | 52 | 266 | 65 | 383 | **27** | **75** | **43** | **145** |
| +15 mins. | 11 | 195 | **18** | 224 | **54** | 37 | 8 | 99 | 60 | 257 | 48 | 365 | 12 | 48 | 28 | 88 |
| +30 mins. | 10 | 222 | 11 | 243 | 45 | 48 | 8 | 101 | 52 | **273** | 77 | **402** | 24 | 72 | 40 | 136 |
| +45 mins. | 11 | **246** | 8 | **265** | 51 | **50** | 9 | **110** | **64** | 255 | 61 | 380 | 17 | 62 | 33 | 112 |
| Total Volume | 46 | 871 | 51 | 968 | 192 | 174 | 37 | 403 | 228 | 1051 | 251 | 1530 | 80 | 257 | 144 | 481 |
| % App. Total | 4.8 | 90 | 5.3 | | 47.6 | 43.2 | 9.2 | | 14.9 | 68.7 | 16.4 | | 16.6 | 53.4 | 29.9 | |
| PHF | .821 | .885 | .708 | .913 | .889 | .870 | .771 | .916 | .891 | .962 | .815 | .951 | .741 | .857 | .837 | .829 |

Counts Unlimited Inc.
PO Box 1178
Corona, CA 92878
(951) 268-6268

City of Fontana
N/S: Sierra Avenue
E/W: San Bernardino Avenue
Weather: Sunny

File Name : FONSISBPM
Site Code : 00000001
Start Date : 5/23/2012
Page No : 1

Groups Printed- Total Volume

| | Sierra Avenue Southbound | | | | San Bernardino Avenue Westbound | | | | Sierra Avenue Northbound | | | | San Bernardino Avenue Eastbound | | | | |
|---|---|---|---|---|---|---|---|---|---|---|---|---|---|---|---|---|---|
| Start Time | Left | Thru | Right | App. Total | Left | Thru | Right | App. Total | Left | Thru | Right | App. Total | Left | Thru | Right | App. Total | Int. Total |
| 04:00 PM | 18 | 241 | 14 | 273 | 38 | 31 | 12 | 81 | 60 | 282 | 63 | 405 | 15 | 45 | 27 | 87 | 846 |
| 04:15 PM | 13 | 179 | 14 | 206 | 52 | 47 | 9 | 108 | 61 | 255 | 50 | 366 | 14 | 61 | 30 | 105 | 785 |
| 04:30 PM | 14 | 208 | 14 | 236 | 42 | 39 | 12 | 93 | 52 | 266 | 65 | 383 | 9 | 48 | 34 | 91 | 803 |
| 04:45 PM | 11 | 195 | 18 | 224 | 54 | 37 | 8 | 99 | 60 | 257 | 48 | 365 | 27 | 75 | 43 | 145 | 833 |
| Total | 56 | 823 | 60 | 939 | 186 | 154 | 41 | 381 | 233 | 1060 | 226 | 1519 | 65 | 229 | 134 | 428 | 3267 |
| 05:00 PM | 10 | 222 | 11 | 243 | 45 | 48 | 8 | 101 | 52 | 273 | 77 | 402 | 12 | 48 | 28 | 88 | 834 |
| 05:15 PM | 11 | 246 | 8 | 265 | 51 | 50 | 9 | 110 | 64 | 255 | 61 | 380 | 24 | 72 | 40 | 136 | 891 |
| 05:30 PM | 12 | 212 | 8 | 232 | 37 | 36 | 9 | 82 | 69 | 234 | 54 | 357 | 17 | 62 | 33 | 112 | 783 |
| 05:45 PM | 6 | 202 | 8 | 216 | 44 | 43 | 9 | 96 | 51 | 247 | 57 | 355 | 19 | 58 | 28 | 105 | 772 |
| Total | 39 | 882 | 35 | 956 | 177 | 177 | 35 | 389 | 236 | 1009 | 249 | 1494 | 72 | 240 | 129 | 441 | 3280 |
| Grand Total | 95 | 1705 | 95 | 1895 | 363 | 331 | 76 | 770 | 469 | 2069 | 475 | 3013 | 137 | 469 | 263 | 869 | 6547 |
| Apprch % | 5 | 90 | 5 | | 47.1 | 43 | 9.9 | | 15.6 | 68.7 | 15.8 | | 15.8 | 54 | 30.3 | | |
| Total % | 1.5 | 26 | 1.5 | 28.9 | 5.5 | 5.1 | 1.2 | 11.8 | 7.2 | 31.6 | 7.3 | 46 | 2.1 | 7.2 | 4 | 13.3 | |

| | Sierra Avenue Southbound | | | | San Bernardino Avenue Westbound | | | | Sierra Avenue Northbound | | | | San Bernardino Avenue Eastbound | | | | |
|---|---|---|---|---|---|---|---|---|---|---|---|---|---|---|---|---|---|
| Start Time | Left | Thru | Right | App. Total | Left | Thru | Right | App. Total | Left | Thru | Right | App. Total | Left | Thru | Right | App. Total | Int. Total |
| Peak Hour Analysis From 04:00 PM to 05:45 PM - Peak 1 of 1 | | | | | | | | | | | | | | | | | |
| Peak Hour for Entire Intersection Begins at 04:30 PM | | | | | | | | | | | | | | | | | |
| 04:30 PM | **14** | 208 | 14 | 236 | 42 | 39 | **12** | 93 | 52 | 266 | 65 | 383 | 9 | 48 | 34 | 91 | 803 |
| 04:45 PM | 11 | 195 | **18** | 224 | **54** | 37 | 8 | 99 | 60 | 257 | 48 | 365 | **27** | **75** | **43** | **145** | 833 |
| 05:00 PM | 10 | 222 | 11 | 243 | 45 | 48 | 8 | 101 | 52 | **273** | **77** | **402** | 12 | 48 | 28 | 88 | 834 |
| 05:15 PM | 11 | **246** | 8 | **265** | 51 | **50** | 9 | **110** | **64** | 255 | 61 | 380 | 24 | 72 | 40 | 136 | **891** |
| Total Volume | 46 | 871 | 51 | 968 | 192 | 174 | 37 | 403 | 228 | 1051 | 251 | 1530 | 72 | 243 | 145 | 460 | 3361 |
| % App. Total | 4.8 | 90 | 5.3 | | 47.6 | 43.2 | 9.2 | | 14.9 | 68.7 | 16.4 | | 15.7 | 52.8 | 31.5 | | |
| PHF | .821 | .885 | .708 | .913 | .889 | .870 | .771 | .916 | .891 | .962 | .815 | .951 | .667 | .810 | .843 | .793 | .943 |

Counts Unlimited, Inc.
PO Box 1178
Corona, CA 92878
(951) 268-6268

City of Fontana
N/S: Sierra Avenue
E/W: Valley Boulevard
Weather: Clear

File Name : FONSIVAAM
Site Code : 06714097
Start Date : 3/11/2014
Page No : 1

Groups Printed- Passenger Vehicles - Large 2 Axle Vehicles - 3 Axle Vehicles - 4+ Axle Trucks

| | Sierra Avenue Southbound | | | | Valley Boulevard Westbound | | | | Sierra Avenue Northbound | | | | Valley Boulevard Eastbound | | | | |
|---|---|---|---|---|---|---|---|---|---|---|---|---|---|---|---|---|---|
| Start Time | Left | Thru | Right | App. Total | Left | Thru | Right | App. Total | Left | Thru | Right | App. Total | Left | Thru | Right | App. Total | Int. Total |
| 07:00 AM | 9 | 297 | 8 | 314 | 150 | 89 | 15 | 254 | 37 | 171 | 130 | 338 | 12 | 26 | 91 | 129 | 1035 |
| 07:15 AM | 6 | 373 | 15 | 394 | 168 | 93 | 14 | 275 | 39 | 240 | 200 | 479 | 34 | 78 | 78 | 190 | 1338 |
| 07:30 AM | 9 | 344 | 22 | 375 | 148 | 65 | 24 | 237 | 37 | 256 | 201 | 494 | 24 | 64 | 94 | 182 | 1288 |
| 07:45 AM | 19 | 284 | 18 | 321 | 139 | 69 | 26 | 234 | 48 | 286 | 260 | 594 | 20 | 48 | 74 | 142 | 1291 |
| Total | 43 | 1298 | 63 | 1404 | 605 | 316 | 79 | 1000 | 161 | 953 | 791 | 1905 | 90 | 216 | 337 | 643 | 4952 |
| 08:00 AM | 24 | 251 | 19 | 294 | 135 | 73 | 33 | 241 | 45 | 303 | 287 | 635 | 18 | 50 | 47 | 115 | 1285 |
| 08:15 AM | 20 | 246 | 18 | 284 | 129 | 56 | 37 | 222 | 48 | 294 | 276 | 618 | 25 | 61 | 63 | 149 | 1273 |
| 08:30 AM | 30 | 238 | 18 | 286 | 111 | 33 | 26 | 170 | 41 | 269 | 212 | 522 | 23 | 40 | 59 | 122 | 1100 |
| 08:45 AM | 36 | 211 | 11 | 258 | 119 | 54 | 30 | 203 | 63 | 225 | 177 | 465 | 18 | 49 | 57 | 124 | 1050 |
| Total | 110 | 946 | 66 | 1122 | 494 | 216 | 126 | 836 | 197 | 1091 | 952 | 2240 | 84 | 200 | 226 | 510 | 4708 |
| Grand Total | 153 | 2244 | 129 | 2526 | 1099 | 532 | 205 | 1836 | 358 | 2044 | 1743 | 4145 | 174 | 416 | 563 | 1153 | 9660 |
| Apprch % | 6.1 | 88.8 | 5.1 | | 59.9 | 29 | 11.2 | | 8.6 | 49.3 | 42.1 | | 15.1 | 36.1 | 48.8 | | |
| Total % | 1.6 | 23.2 | 1.3 | 26.1 | 11.4 | 5.5 | 2.1 | 19 | 3.7 | 21.2 | 18 | 42.9 | 1.8 | 4.3 | 5.8 | 11.9 | |
| Passenger Vehicles | 144 | 2205 | 125 | 2474 | 1059 | 499 | 189 | 1747 | 339 | 1973 | 1691 | 4003 | 168 | 390 | 531 | 1089 | 9313 |
| % Passenger Vehicles | 94.1 | 98.3 | 96.9 | 97.9 | 96.4 | 93.8 | 92.2 | 95.2 | 94.7 | 96.5 | 97 | 96.6 | 96.6 | 93.8 | 94.3 | 94.4 | 96.4 |
| Large 2 Axle Vehicles | 9 | 31 | 1 | 41 | 24 | 21 | 11 | 56 | 16 | 62 | 39 | 117 | 4 | 18 | 18 | 40 | 254 |
| % Large 2 Axle Vehicles | 5.9 | 1.4 | 0.8 | 1.6 | 2.2 | 3.9 | 5.4 | 3.1 | 4.5 | 3 | 2.2 | 2.8 | 2.3 | 4.3 | 3.2 | 3.5 | 2.6 |
| 3 Axle Vehicles | 0 | 2 | 2 | 4 | 4 | 5 | 4 | 13 | 2 | 3 | 7 | 12 | 0 | 4 | 6 | 10 | 39 |
| % 3 Axle Vehicles | 0 | 0.1 | 1.6 | 0.2 | 0.4 | 0.9 | 2 | 0.7 | 0.6 | 0.1 | 0.4 | 0.3 | 0 | 1 | 1.1 | 0.9 | 0.4 |
| 4+ Axle Trucks | 0 | 6 | 1 | 7 | 12 | 7 | 1 | 20 | 1 | 6 | 6 | 13 | 2 | 4 | 8 | 14 | 54 |
| % 4+ Axle Trucks | 0 | 0.3 | 0.8 | 0.3 | 1.1 | 1.3 | 0.5 | 1.1 | 0.3 | 0.3 | 0.3 | 0.3 | 1.1 | 1 | 1.4 | 1.2 | 0.6 |

| | Sierra Avenue Southbound | | | | Valley Boulevard Westbound | | | | Sierra Avenue Northbound | | | | Valley Boulevard Eastbound | | | | |
|---|---|---|---|---|---|---|---|---|---|---|---|---|---|---|---|---|---|
| Start Time | Left | Thru | Right | App. Total | Left | Thru | Right | App. Total | Left | Thru | Right | App. Total | Left | Thru | Right | App. Total | Int. Total |
| Peak Hour Analysis From 07:00 AM to 08:45 AM - Peak 1 of 1 | | | | | | | | | | | | | | | | | |
| Peak Hour for Entire Intersection Begins at 07:15 AM | | | | | | | | | | | | | | | | | |
| 07:15 AM | 6 | **373** | 15 | **394** | **168** | **93** | 14 | **275** | 39 | 240 | 200 | 479 | **34** | **78** | 78 | **190** | **1338** |
| 07:30 AM | 9 | 344 | **22** | 375 | 148 | 65 | 24 | 237 | 37 | 256 | 201 | 494 | 24 | 64 | **94** | 182 | 1288 |
| 07:45 AM | 19 | 284 | 18 | 321 | 139 | 69 | 26 | 234 | **48** | 286 | 260 | 594 | 20 | 48 | 74 | 142 | 1291 |
| 08:00 AM | **24** | 251 | 19 | 294 | 135 | 73 | **33** | 241 | 45 | **303** | **287** | **635** | 18 | 50 | 47 | 115 | 1285 |
| Total Volume | 58 | 1252 | 74 | 1384 | 590 | 300 | 97 | 987 | 169 | 1085 | 948 | 2202 | 96 | 240 | 293 | 629 | 5202 |
| % App. Total | 4.2 | 90.5 | 5.3 | | 59.8 | 30.4 | 9.8 | | 7.7 | 49.3 | 43.1 | | 15.3 | 38.2 | 46.6 | | |
| PHF | .604 | .839 | .841 | .878 | .878 | .806 | .735 | .897 | .880 | .895 | .826 | .867 | .706 | .769 | .779 | .828 | .972 |

Counts Unlimited, Inc.
PO Box 1178
Corona, CA 92878
(951) 268-6268

City of Fontana
N/S: Sierra Avenue
E/W: Valley Boulevard
Weather: Clear

File Name : FONSIVAAM
Site Code : 06714097
Start Date : 3/11/2014
Page No : 2

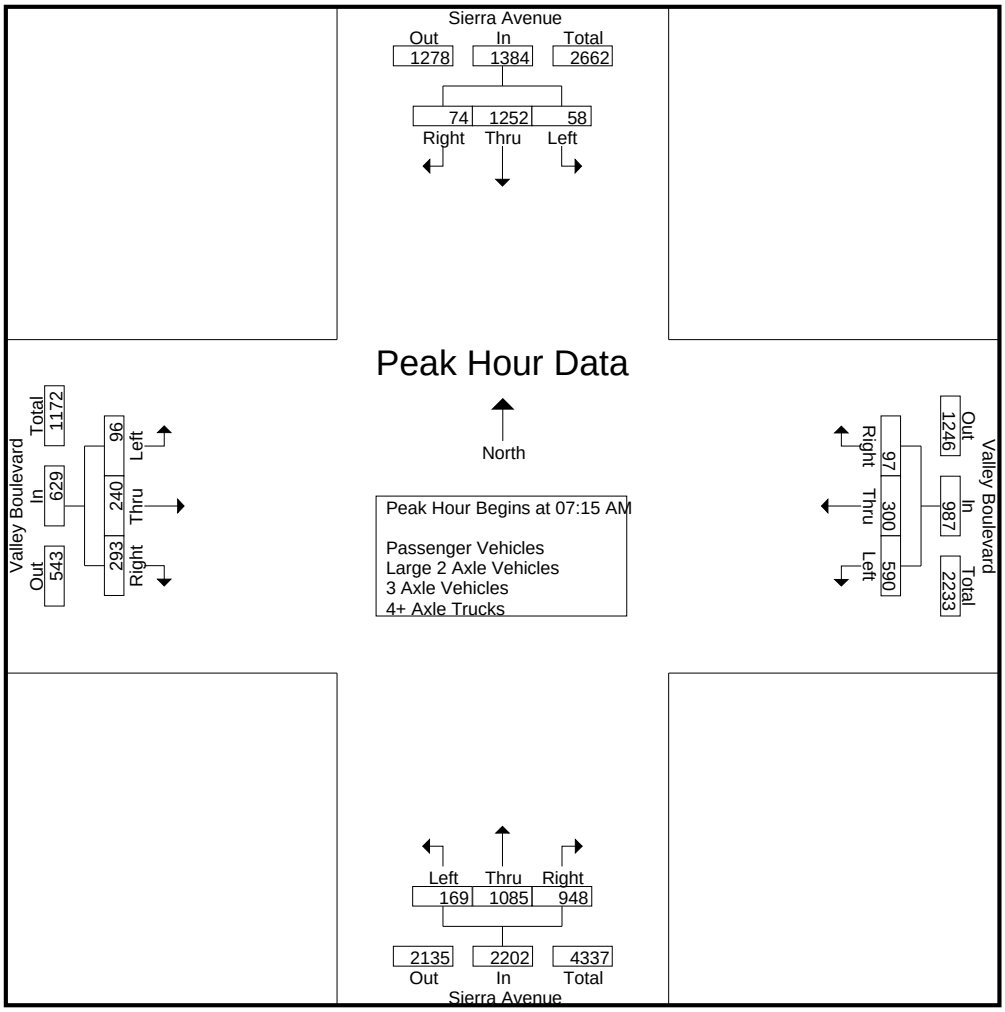


Peak Hour Analysis From 07:00 AM to 08:45 AM - Peak 1 of 1

Peak Hour for Each Approach Begins at:

| | 07:00 AM | | | | 07:00 AM | | | | 07:45 AM | | | | 07:00 AM | | | |
|---|---|---|---|---|---|---|---|---|---|---|---|---|---|---|---|---|
| +0 mins. | 9 | 297 | 8 | 314 | 150 | 89 | 15 | 254 | **48** | 286 | 260 | 594 | 12 | 26 | 91 | 129 |
| +15 mins. | 6 | **373** | 15 | **394** | **168** | **93** | 14 | **275** | 45 | **303** | **287** | **635** | **34** | **78** | 78 | **190** |
| +30 mins. | 9 | 344 | **22** | 375 | 148 | 65 | 24 | 237 | 48 | 294 | 276 | 618 | 24 | 64 | **94** | 182 |
| +45 mins. | **19** | 284 | 18 | 321 | 139 | 69 | **26** | 234 | 41 | 269 | 212 | 522 | 20 | 48 | 74 | 142 |
| Total Volume | 43 | 1298 | 63 | 1404 | 605 | 316 | 79 | 1000 | 182 | 1152 | 1035 | 2369 | 90 | 216 | 337 | 643 |
| % App. Total | 3.1 | 92.5 | 4.5 | | 60.5 | 31.6 | 7.9 | | 7.7 | 48.6 | 43.7 | | 14 | 33.6 | 52.4 | |
| PHF | .566 | .870 | .716 | .891 | .900 | .849 | .760 | .909 | .948 | .950 | .902 | .933 | .662 | .692 | .896 | .846 |

Counts Unlimited, Inc.
PO Box 1178
Corona, CA 92878
(951) 268-6268

City of Fontana
N/S: Sierra Avenue
E/W: Valley Boulevard
Weather: Clear

File Name : FONSIVAAM
Site Code : 06714097
Start Date : 3/11/2014
Page No : 1

Groups Printed- Passenger Vehicles

| | Sierra Avenue Southbound | | | | Valley Boulevard Westbound | | | | Sierra Avenue Northbound | | | | Valley Boulevard Eastbound | | | | |
|---|---|---|---|---|---|---|---|---|---|---|---|---|---|---|---|---|---|
| Start Time | Left | Thru | Right | App. Total | Left | Thru | Right | App. Total | Left | Thru | Right | App. Total | Left | Thru | Right | App. Total | Int. Total |
| 07:00 AM | 9 | 293 | 7 | 309 | 146 | 86 | 12 | 244 | 36 | 167 | 126 | 329 | 12 | 23 | 82 | 117 | 999 |
| 07:15 AM | 6 | 369 | 15 | 390 | 159 | 89 | 13 | 261 | 37 | 228 | 189 | 454 | 34 | 75 | 73 | 182 | 1287 |
| 07:30 AM | 8 | 338 | 21 | 367 | 138 | 61 | 22 | 221 | 34 | 247 | 195 | 476 | 24 | 60 | 91 | 175 | 1239 |
| 07:45 AM | 18 | 279 | 17 | 314 | 134 | 63 | 24 | 221 | 48 | 280 | 257 | 585 | 18 | 45 | 71 | 134 | 1254 |
| Total | 41 | 1279 | 60 | 1380 | 577 | 299 | 71 | 947 | 155 | 922 | 767 | 1844 | 88 | 203 | 317 | 608 | 4779 |
| 08:00 AM | 23 | 245 | 19 | 287 | 134 | 67 | 29 | 230 | 43 | 291 | 278 | 612 | 17 | 46 | 45 | 108 | 1237 |
| 08:15 AM | 20 | 241 | 17 | 278 | 127 | 53 | 36 | 216 | 43 | 290 | 270 | 603 | 25 | 57 | 59 | 141 | 1238 |
| 08:30 AM | 29 | 233 | 18 | 280 | 103 | 33 | 26 | 162 | 39 | 257 | 205 | 501 | 20 | 39 | 56 | 115 | 1058 |
| 08:45 AM | 31 | 207 | 11 | 249 | 118 | 47 | 27 | 192 | 59 | 213 | 171 | 443 | 18 | 45 | 54 | 117 | 1001 |
| Total | 103 | 926 | 65 | 1094 | 482 | 200 | 118 | 800 | 184 | 1051 | 924 | 2159 | 80 | 187 | 214 | 481 | 4534 |
| Grand Total | 144 | 2205 | 125 | 2474 | 1059 | 499 | 189 | 1747 | 339 | 1973 | 1691 | 4003 | 168 | 390 | 531 | 1089 | 9313 |
| Apprch % | 5.8 | 89.1 | 5.1 | | 60.6 | 28.6 | 10.8 | | 8.5 | 49.3 | 42.2 | | 15.4 | 35.8 | 48.8 | | |
| Total % | 1.5 | 23.7 | 1.3 | 26.6 | 11.4 | 5.4 | 2 | 18.8 | 3.6 | 21.2 | 18.2 | 43 | 1.8 | 4.2 | 5.7 | 11.7 | |

| | Sierra Avenue Southbound | | | | Valley Boulevard Westbound | | | | Sierra Avenue Northbound | | | | Valley Boulevard Eastbound | | | | |
|---|---|---|---|---|---|---|---|---|---|---|---|---|---|---|---|---|---|
| Start Time | Left | Thru | Right | App. Total | Left | Thru | Right | App. Total | Left | Thru | Right | App. Total | Left | Thru | Right | App. Total | Int. Total |
| Peak Hour Analysis From 07:15 AM to 08:00 AM - Peak 1 of 1 | | | | | | | | | | | | | | | | | |
| Peak Hour for Entire Intersection Begins at 07:15 AM | | | | | | | | | | | | | | | | | |
| 07:15 AM | 6 | **369** | 15 | **390** | **159** | **89** | 13 | **261** | 37 | 228 | 189 | 454 | **34** | **75** | 73 | **182** | **1287** |
| 07:30 AM | 8 | 338 | **21** | 367 | 138 | 61 | 22 | 221 | 34 | 247 | 195 | 476 | 24 | 60 | **91** | 175 | 1239 |
| 07:45 AM | 18 | 279 | 17 | 314 | 134 | 63 | 24 | 221 | **48** | 280 | 257 | 585 | 18 | 45 | 71 | 134 | 1254 |
| 08:00 AM | **23** | 245 | 19 | 287 | 134 | 67 | **29** | 230 | 43 | **291** | **278** | **612** | 17 | 46 | 45 | 108 | 1237 |
| Total Volume | 55 | 1231 | 72 | 1358 | 565 | 280 | 88 | 933 | 162 | 1046 | 919 | 2127 | 93 | 226 | 280 | 599 | 5017 |
| % App. Total | 4.1 | 90.6 | 5.3 | | 60.6 | 30 | 9.4 | | 7.6 | 49.2 | 43.2 | | 15.5 | 37.7 | 46.7 | | |
| PHF | .598 | .834 | .857 | .871 | .888 | .787 | .759 | .894 | .844 | .899 | .826 | .869 | .684 | .753 | .769 | .823 | .975 |

Counts Unlimited, Inc.
PO Box 1178
Corona, CA 92878
(951) 268-6268

City of Fontana
N/S: Sierra Avenue
E/W: Valley Boulevard
Weather: Clear

File Name : FONSIVAAM
Site Code : 06714097
Start Date : 3/11/2014
Page No : 2

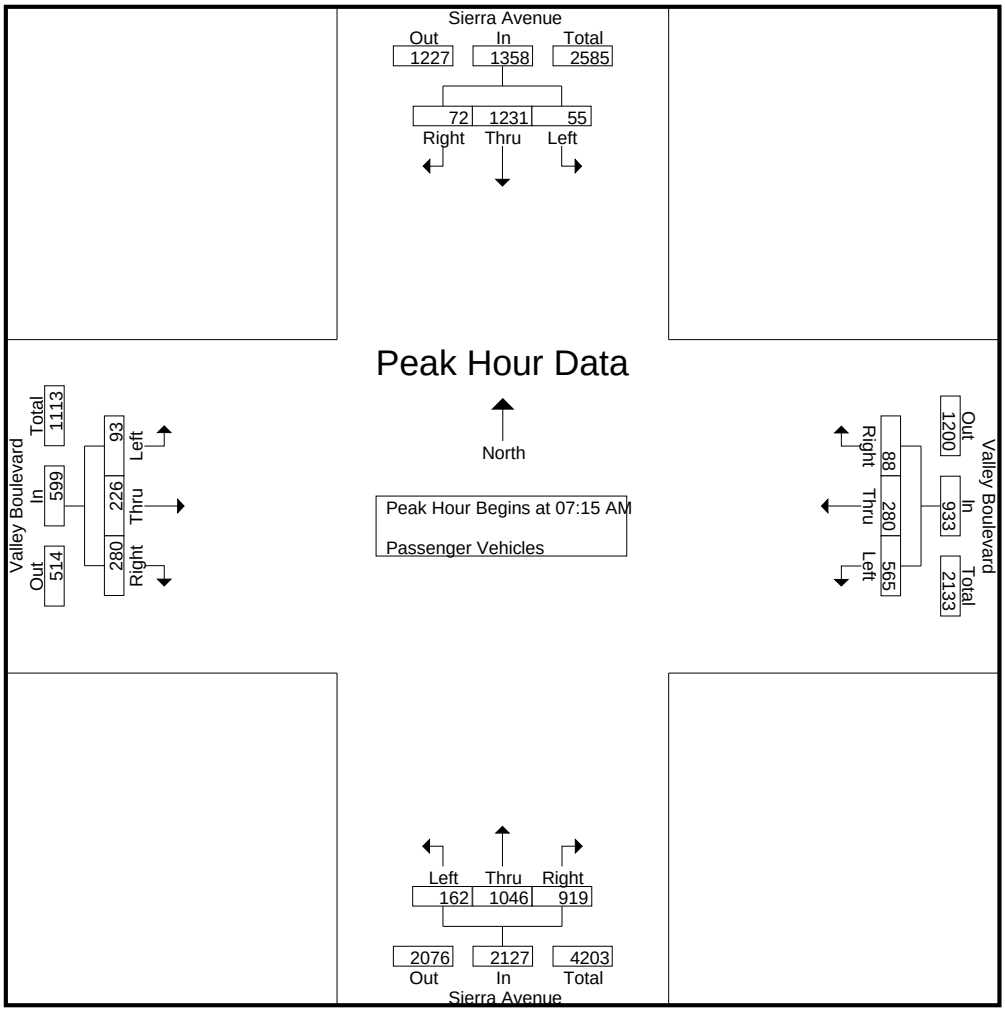


Peak Hour Analysis From 07:15 AM to 08:00 AM - Peak 1 of 1

Peak Hour for Each Approach Begins at:

| | 07:15 AM | | | | 07:15 AM | | | | 07:15 AM | | | | 07:15 AM | | | |
|---|---|---|---|---|---|---|---|---|---|---|---|---|---|---|---|---|
| +0 mins. | 6 | **369** | 15 | **390** | **159** | **89** | 13 | **261** | 37 | 228 | 189 | 454 | **34** | **75** | 73 | **182** |
| +15 mins. | 8 | 338 | **21** | 367 | 138 | 61 | 22 | 221 | 34 | 247 | 195 | 476 | 24 | 60 | **91** | 175 |
| +30 mins. | 18 | 279 | 17 | 314 | 134 | 63 | 24 | 221 | **48** | 280 | 257 | 585 | 18 | 45 | 71 | 134 |
| +45 mins. | **23** | 245 | 19 | 287 | 134 | 67 | **29** | 230 | 43 | **291** | **278** | **612** | 17 | 46 | 45 | 108 |
| Total Volume | 55 | 1231 | 72 | 1358 | 565 | 280 | 88 | 933 | 162 | 1046 | 919 | 2127 | 93 | 226 | 280 | 599 |
| % App. Total | 4.1 | 90.6 | 5.3 | | 60.6 | 30 | 9.4 | | 7.6 | 49.2 | 43.2 | | 15.5 | 37.7 | 46.7 | |
| PHF | .598 | .834 | .857 | .871 | .888 | .787 | .759 | .894 | .844 | .899 | .826 | .869 | .684 | .753 | .769 | .823 |

Counts Unlimited, Inc.
PO Box 1178
Corona, CA 92878
(951) 268-6268

City of Fontana
N/S: Sierra Avenue
E/W: Valley Boulevard
Weather: Clear

File Name : FONSIVAAM
Site Code : 06714097
Start Date : 3/11/2014
Page No : 1

Groups Printed- Large 2 Axle Vehicles

| | Sierra Avenue Southbound | | | | Valley Boulevard Westbound | | | | Sierra Avenue Northbound | | | | Valley Boulevard Eastbound | | | | |
|---|---|---|---|---|---|---|---|---|---|---|---|---|---|---|---|---|---|
| Start Time | Left | Thru | Right | App. Total | Left | Thru | Right | App. Total | Left | Thru | Right | App. Total | Left | Thru | Right | App. Total | Int. Total |
| 07:00 AM | 0 | 2 | 1 | 3 | 3 | 2 | 2 | 7 | 1 | 3 | 1 | 5 | 0 | 3 | 5 | 8 | 23 |
| 07:15 AM | 0 | 3 | 0 | 3 | 3 | 3 | 0 | 6 | 2 | 11 | 10 | 23 | 0 | 2 | 3 | 5 | 37 |
| 07:30 AM | 1 | 5 | 0 | 6 | 5 | 3 | 1 | 9 | 3 | 8 | 5 | 16 | 0 | 3 | 2 | 5 | 36 |
| 07:45 AM | 1 | 4 | 0 | 5 | 4 | 4 | 2 | 10 | 0 | 3 | 3 | 6 | 1 | 2 | 1 | 4 | 25 |
| Total | 2 | 14 | 1 | 17 | 15 | 12 | 5 | 32 | 6 | 25 | 19 | 50 | 1 | 10 | 11 | 22 | 121 |
| 08:00 AM | 1 | 5 | 0 | 6 | 1 | 4 | 2 | 7 | 2 | 11 | 6 | 19 | 1 | 3 | 1 | 5 | 37 |
| 08:15 AM | 0 | 3 | 0 | 3 | 0 | 2 | 1 | 3 | 3 | 4 | 6 | 13 | 0 | 2 | 4 | 6 | 25 |
| 08:30 AM | 1 | 5 | 0 | 6 | 7 | 0 | 0 | 7 | 2 | 11 | 6 | 19 | 2 | 1 | 0 | 3 | 35 |
| 08:45 AM | 5 | 4 | 0 | 9 | 1 | 3 | 3 | 7 | 3 | 11 | 2 | 16 | 0 | 2 | 2 | 4 | 36 |
| Total | 7 | 17 | 0 | 24 | 9 | 9 | 6 | 24 | 10 | 37 | 20 | 67 | 3 | 8 | 7 | 18 | 133 |
| Grand Total | 9 | 31 | 1 | 41 | 24 | 21 | 11 | 56 | 16 | 62 | 39 | 117 | 4 | 18 | 18 | 40 | 254 |
| Apprch % | 22 | 75.6 | 2.4 | | 42.9 | 37.5 | 19.6 | | 13.7 | 53 | 33.3 | | 10 | 45 | 45 | | |
| Total % | 3.5 | 12.2 | 0.4 | 16.1 | 9.4 | 8.3 | 4.3 | 22 | 6.3 | 24.4 | 15.4 | 46.1 | 1.6 | 7.1 | 7.1 | 15.7 | |

| | Sierra Avenue Southbound | | | | Valley Boulevard Westbound | | | | Sierra Avenue Northbound | | | | Valley Boulevard Eastbound | | | | |
|---|---|---|---|---|---|---|---|---|---|---|---|---|---|---|---|---|---|
| Start Time | Left | Thru | Right | App. Total | Left | Thru | Right | App. Total | Left | Thru | Right | App. Total | Left | Thru | Right | App. Total | Int. Total |
| Peak Hour Analysis From 07:15 AM to 08:00 AM - Peak 1 of 1 | | | | | | | | | | | | | | | | | |
| Peak Hour for Entire Intersection Begins at 07:15 AM | | | | | | | | | | | | | | | | | |
| 07:15 AM | 0 | 3 | 0 | 3 | 3 | 3 | 0 | 6 | 2 | **11** | **10** | **23** | 0 | 2 | **3** | **5** | **37** |
| 07:30 AM | **1** | **5** | 0 | **6** | **5** | 3 | 1 | 9 | **3** | 8 | 5 | 16 | 0 | **3** | 2 | 5 | 36 |
| 07:45 AM | 1 | 4 | 0 | 5 | 4 | **4** | **2** | **10** | 0 | 3 | 3 | 6 | **1** | 2 | 1 | 4 | 25 |
| 08:00 AM | 1 | 5 | 0 | 6 | 1 | 4 | 2 | 7 | 2 | 11 | 6 | 19 | 1 | 3 | 1 | 5 | 37 |
| Total Volume | 3 | 17 | 0 | 20 | 13 | 14 | 5 | 32 | 7 | 33 | 24 | 64 | 2 | 10 | 7 | 19 | 135 |
| % App. Total | 15 | 85 | 0 | | 40.6 | 43.8 | 15.6 | | 10.9 | 51.6 | 37.5 | | 10.5 | 52.6 | 36.8 | | |
| PHF | .750 | .850 | .000 | .833 | .650 | .875 | .625 | .800 | .583 | .750 | .600 | .696 | .500 | .833 | .583 | .950 | .912 |

Counts Unlimited, Inc.
PO Box 1178
Corona, CA 92878
(951) 268-6268

City of Fontana
N/S: Sierra Avenue
E/W: Valley Boulevard
Weather: Clear

File Name : FONSIVAAM
Site Code : 06714097
Start Date : 3/11/2014
Page No : 2

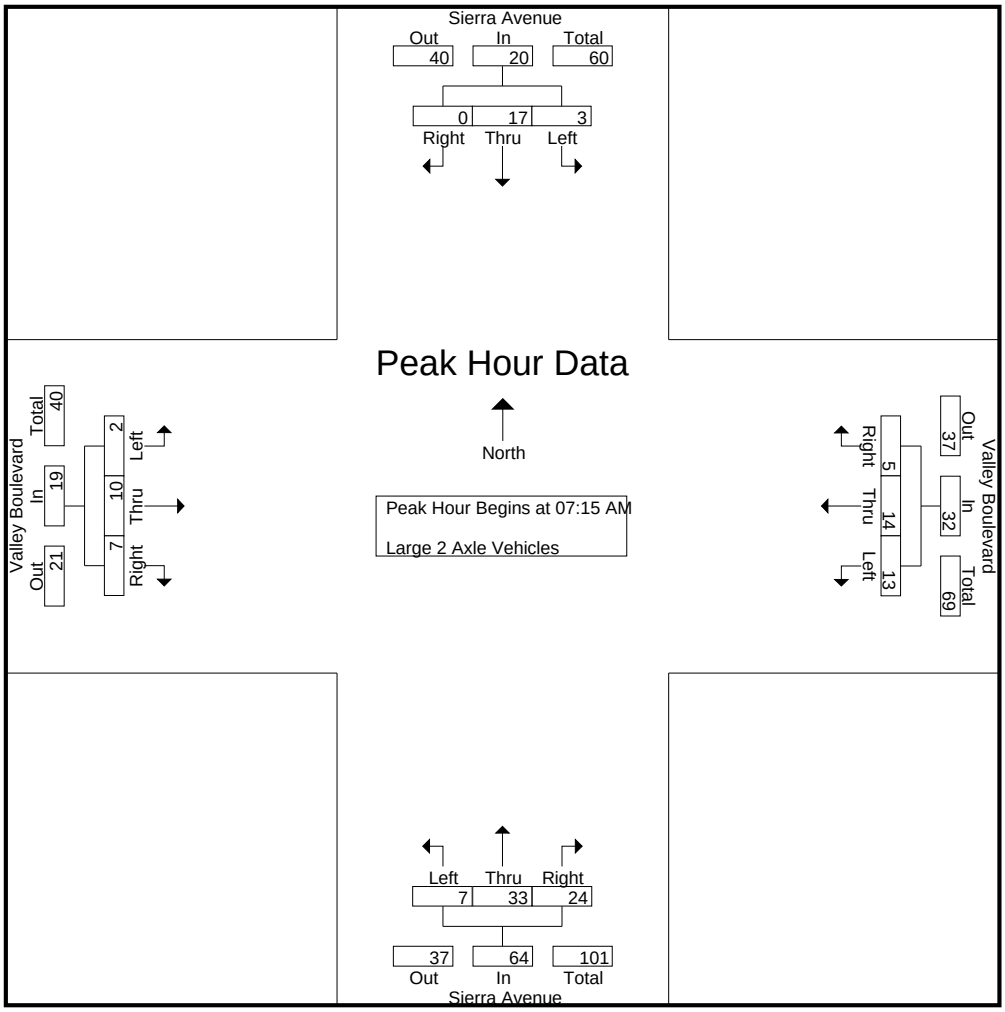


Peak Hour Analysis From 07:15 AM to 08:00 AM - Peak 1 of 1

Peak Hour for Each Approach Begins at:

| | 07:15 AM | | | | 07:15 AM | | | | 07:15 AM | | | | 07:15 AM | | | |
|---|---|---|---|---|---|---|---|---|---|---|---|---|---|---|---|---|
| +0 mins. | 0 | 3 | 0 | 3 | 3 | 3 | 0 | 6 | 2 | **11** | **10** | **23** | 0 | 2 | **3** | **5** |
| +15 mins. | **1** | **5** | 0 | **6** | **5** | 3 | 1 | 9 | **3** | 8 | 5 | 16 | 0 | **3** | 2 | 5 |
| +30 mins. | 1 | 4 | 0 | 5 | 4 | **4** | **2** | **10** | 0 | 3 | 3 | 6 | **1** | 2 | 1 | 4 |
| +45 mins. | 1 | 5 | 0 | 6 | 1 | 4 | 2 | 7 | 2 | 11 | 6 | 19 | 1 | 3 | 1 | 5 |
| Total Volume | 3 | 17 | 0 | 20 | 13 | 14 | 5 | 32 | 7 | 33 | 24 | 64 | 2 | 10 | 7 | 19 |
| % App. Total | 15 | 85 | 0 | | 40.6 | 43.8 | 15.6 | | 10.9 | 51.6 | 37.5 | | 10.5 | 52.6 | 36.8 | |
| PHF | .750 | .850 | .000 | .833 | .650 | .875 | .625 | .800 | .583 | .750 | .600 | .696 | .500 | .833 | .583 | .950 |

Counts Unlimited, Inc.
PO Box 1178
Corona, CA 92878
(951) 268-6268

City of Fontana
N/S: Sierra Avenue
E/W: Valley Boulevard
Weather: Clear

File Name : FONSIVAAM
Site Code : 06714097
Start Date : 3/11/2014
Page No : 1

Groups Printed- 3 Axle Vehicles

| | Sierra Avenue Southbound | | | | Valley Boulevard Westbound | | | | Sierra Avenue Northbound | | | | Valley Boulevard Eastbound | | | | |
|---|---|---|---|---|---|---|---|---|---|---|---|---|---|---|---|---|---|
| Start Time | Left | Thru | Right | App. Total | Left | Thru | Right | App. Total | Left | Thru | Right | App. Total | Left | Thru | Right | App. Total | Int. Total |
| 07:00 AM | 0 | 0 | 0 | 0 | 0 | 0 | 1 | 1 | 0 | 0 | 1 | 1 | 0 | 0 | 2 | 2 | 4 |
| 07:15 AM | 0 | 0 | 0 | 0 | 2 | 1 | 1 | 4 | 0 | 0 | 1 | 1 | 0 | 1 | 1 | 2 | 7 |
| 07:30 AM | 0 | 0 | 0 | 0 | 2 | 1 | 0 | 3 | 0 | 0 | 1 | 1 | 0 | 0 | 0 | 0 | 4 |
| 07:45 AM | 0 | 1 | 1 | 2 | 0 | 0 | 0 | 0 | 0 | 2 | 0 | 2 | 0 | 1 | 0 | 1 | 5 |
| Total | 0 | 1 | 1 | 2 | 4 | 2 | 2 | 8 | 0 | 2 | 3 | 5 | 0 | 2 | 3 | 5 | 20 |
| 08:00 AM | 0 | 1 | 0 | 1 | 0 | 0 | 2 | 2 | 0 | 0 | 2 | 2 | 0 | 0 | 1 | 1 | 6 |
| 08:15 AM | 0 | 0 | 1 | 1 | 0 | 0 | 0 | 0 | 2 | 0 | 0 | 2 | 0 | 1 | 0 | 1 | 4 |
| 08:30 AM | 0 | 0 | 0 | 0 | 0 | 0 | 0 | 0 | 0 | 0 | 1 | 1 | 0 | 0 | 2 | 2 | 3 |
| 08:45 AM | 0 | 0 | 0 | 0 | 0 | 3 | 0 | 3 | 0 | 1 | 1 | 2 | 0 | 1 | 0 | 1 | 6 |
| Total | 0 | 1 | 1 | 2 | 0 | 3 | 2 | 5 | 2 | 1 | 4 | 7 | 0 | 2 | 3 | 5 | 19 |
| Grand Total | 0 | 2 | 2 | 4 | 4 | 5 | 4 | 13 | 2 | 3 | 7 | 12 | 0 | 4 | 6 | 10 | 39 |
| Apprch % | 0 | 50 | 50 | | 30.8 | 38.5 | 30.8 | | 16.7 | 25 | 58.3 | | 0 | 40 | 60 | | |
| Total % | 0 | 5.1 | 5.1 | 10.3 | 10.3 | 12.8 | 10.3 | 33.3 | 5.1 | 7.7 | 17.9 | 30.8 | 0 | 10.3 | 15.4 | 25.6 | |

| | Sierra Avenue Southbound | | | | Valley Boulevard Westbound | | | | Sierra Avenue Northbound | | | | Valley Boulevard Eastbound | | | | |
|---|---|---|---|---|---|---|---|---|---|---|---|---|---|---|---|---|---|
| Start Time | Left | Thru | Right | App. Total | Left | Thru | Right | App. Total | Left | Thru | Right | App. Total | Left | Thru | Right | App. Total | Int. Total |
| Peak Hour Analysis From 07:15 AM to 08:00 AM - Peak 1 of 1 | | | | | | | | | | | | | | | | | |
| Peak Hour for Entire Intersection Begins at 07:15 AM | | | | | | | | | | | | | | | | | |
| 07:15 AM | 0 | 0 | 0 | 0 | **2** | **1** | 1 | **4** | 0 | 0 | 1 | 1 | 0 | **1** | **1** | **2** | **7** |
| 07:30 AM | 0 | 0 | 0 | 0 | 2 | 1 | 0 | 3 | 0 | 0 | 1 | 1 | 0 | 0 | 0 | 0 | 4 |
| 07:45 AM | 0 | **1** | **1** | **2** | 0 | 0 | 0 | 0 | 0 | **2** | 0 | **2** | 0 | 1 | 0 | 1 | 5 |
| 08:00 AM | 0 | 1 | 0 | 1 | 0 | 0 | **2** | 2 | 0 | 0 | **2** | 2 | 0 | 0 | 1 | 1 | 6 |
| Total Volume | 0 | 2 | 1 | 3 | 4 | 2 | 3 | 9 | 0 | 2 | 4 | 6 | 0 | 2 | 2 | 4 | 22 |
| % App. Total | 0 | 66.7 | 33.3 | | 44.4 | 22.2 | 33.3 | | 0 | 33.3 | 66.7 | | 0 | 50 | 50 | | |
| PHF | .000 | .500 | .250 | .375 | .500 | .500 | .375 | .563 | .000 | .250 | .500 | .750 | .000 | .500 | .500 | .500 | .786 |

Counts Unlimited, Inc.
PO Box 1178
Corona, CA 92878
(951) 268-6268

City of Fontana
N/S: Sierra Avenue
E/W: Valley Boulevard
Weather: Clear

File Name : FONSIVAAM
Site Code : 06714097
Start Date : 3/11/2014
Page No : 2

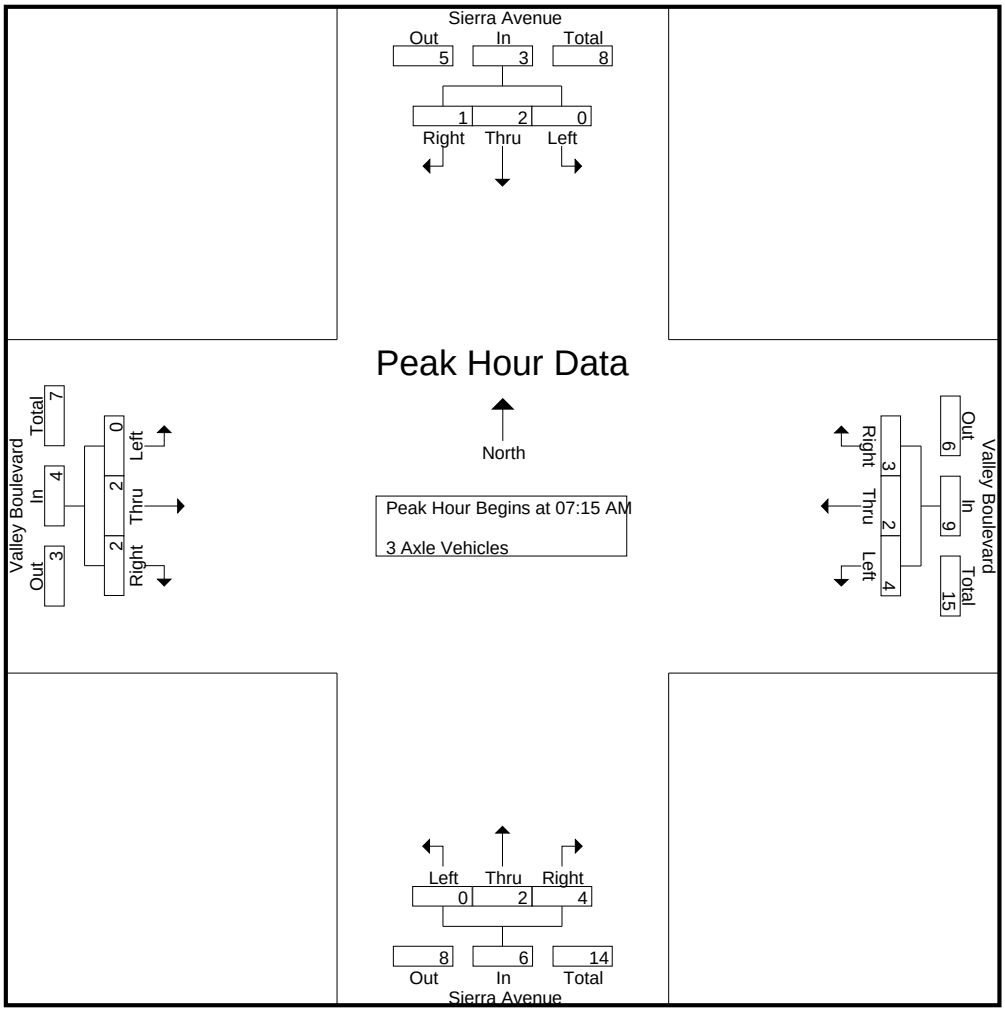


Peak Hour Analysis From 07:15 AM to 08:00 AM - Peak 1 of 1

Peak Hour for Each Approach Begins at:

| | 07:15 AM | | | | 07:15 AM | | | | 07:15 AM | | | | 07:15 AM | | | |
|---|---|---|---|---|---|---|---|---|---|---|---|---|---|---|---|---|
| +0 mins. | 0 | 0 | 0 | 0 | **2** | **1** | 1 | **4** | 0 | 0 | 1 | 1 | 0 | **1** | **1** | **2** |
| +15 mins. | 0 | 0 | 0 | 0 | 2 | 1 | 0 | 3 | 0 | 0 | 1 | 1 | 0 | 0 | 0 | 0 |
| +30 mins. | 0 | **1** | **1** | **2** | 0 | 0 | 0 | 0 | 0 | **2** | 0 | **2** | 0 | 1 | 0 | 1 |
| +45 mins. | 0 | 1 | 0 | 1 | 0 | 0 | **2** | 2 | 0 | 0 | **2** | 2 | 0 | 0 | 1 | 1 |
| Total Volume | 0 | 2 | 1 | 3 | 4 | 2 | 3 | 9 | 0 | 2 | 4 | 6 | 0 | 2 | 2 | 4 |
| % App. Total | 0 | 66.7 | 33.3 | | 44.4 | 22.2 | 33.3 | | 0 | 33.3 | 66.7 | | 0 | 50 | 50 | |
| PHF | .000 | .500 | .250 | .375 | .500 | .500 | .375 | .563 | .000 | .250 | .500 | .750 | .000 | .500 | .500 | .500 |

Counts Unlimited, Inc.
PO Box 1178
Corona, CA 92878
(951) 268-6268

City of Fontana
N/S: Sierra Avenue
E/W: Valley Boulevard
Weather: Clear

File Name : FONSIVAAM
Site Code : 06714097
Start Date : 3/11/2014
Page No : 1

Groups Printed- 4+ Axle Trucks

| | Sierra Avenue Southbound | | | | Valley Boulevard Westbound | | | | Sierra Avenue Northbound | | | | Valley Boulevard Eastbound | | | | |
|---|---|---|---|---|---|---|---|---|---|---|---|---|---|---|---|---|---|
| Start Time | Left | Thru | Right | App. Total | Left | Thru | Right | App. Total | Left | Thru | Right | App. Total | Left | Thru | Right | App. Total | Int. Total |
| 07:00 AM | 0 | 2 | 0 | 2 | 1 | 1 | 0 | 2 | 0 | 1 | 2 | 3 | 0 | 0 | 2 | 2 | 9 |
| 07:15 AM | 0 | 1 | 0 | 1 | 4 | 0 | 0 | 4 | 0 | 1 | 0 | 1 | 0 | 0 | 1 | 1 | 7 |
| 07:30 AM | 0 | 1 | 1 | 2 | 3 | 0 | 1 | 4 | 0 | 1 | 0 | 1 | 0 | 1 | 1 | 2 | 9 |
| 07:45 AM | 0 | 0 | 0 | 0 | 1 | 2 | 0 | 3 | 0 | 1 | 0 | 1 | 1 | 0 | 2 | 3 | 7 |
| Total | 0 | 4 | 1 | 5 | 9 | 3 | 1 | 13 | 0 | 4 | 2 | 6 | 1 | 1 | 6 | 8 | 32 |
| 08:00 AM | 0 | 0 | 0 | 0 | 0 | 2 | 0 | 2 | 0 | 1 | 1 | 2 | 0 | 1 | 0 | 1 | 5 |
| 08:15 AM | 0 | 2 | 0 | 2 | 2 | 1 | 0 | 3 | 0 | 0 | 0 | 0 | 0 | 1 | 0 | 1 | 6 |
| 08:30 AM | 0 | 0 | 0 | 0 | 1 | 0 | 0 | 1 | 0 | 1 | 0 | 1 | 1 | 0 | 1 | 2 | 4 |
| 08:45 AM | 0 | 0 | 0 | 0 | 0 | 1 | 0 | 1 | 1 | 0 | 3 | 4 | 0 | 1 | 1 | 2 | 7 |
| Total | 0 | 2 | 0 | 2 | 3 | 4 | 0 | 7 | 1 | 2 | 4 | 7 | 1 | 3 | 2 | 6 | 22 |
| Grand Total | 0 | 6 | 1 | 7 | 12 | 7 | 1 | 20 | 1 | 6 | 6 | 13 | 2 | 4 | 8 | 14 | 54 |
| Apprch % | 0 | 85.7 | 14.3 | | 60 | 35 | 5 | | 7.7 | 46.2 | 46.2 | | 14.3 | 28.6 | 57.1 | | |
| Total % | 0 | 11.1 | 1.9 | 13 | 22.2 | 13 | 1.9 | 37 | 1.9 | 11.1 | 11.1 | 24.1 | 3.7 | 7.4 | 14.8 | 25.9 | |

| | Sierra Avenue Southbound | | | | Valley Boulevard Westbound | | | | Sierra Avenue Northbound | | | | Valley Boulevard Eastbound | | | | |
|---|---|---|---|---|---|---|---|---|---|---|---|---|---|---|---|---|---|
| Start Time | Left | Thru | Right | App. Total | Left | Thru | Right | App. Total | Left | Thru | Right | App. Total | Left | Thru | Right | App. Total | Int. Total |
| Peak Hour Analysis From 07:15 AM to 08:00 AM - Peak 1 of 1 | | | | | | | | | | | | | | | | | |
| Peak Hour for Entire Intersection Begins at 07:15 AM | | | | | | | | | | | | | | | | | |
| 07:15 AM | 0 | **1** | 0 | 1 | **4** | 0 | 0 | **4** | 0 | **1** | 0 | 1 | 0 | 0 | 1 | 1 | 7 |
| 07:30 AM | 0 | 1 | **1** | **2** | 3 | 0 | **1** | 4 | 0 | 1 | 0 | 1 | 0 | **1** | 1 | 2 | **9** |
| 07:45 AM | 0 | 0 | 0 | 0 | 1 | **2** | 0 | 3 | 0 | 1 | 0 | 1 | **1** | 0 | **2** | **3** | 7 |
| 08:00 AM | 0 | 0 | 0 | 0 | 0 | 2 | 0 | 2 | 0 | 1 | **1** | **2** | 0 | 1 | 0 | 1 | 5 |
| Total Volume | 0 | 2 | 1 | 3 | 8 | 4 | 1 | 13 | 0 | 4 | 1 | 5 | 1 | 2 | 4 | 7 | 28 |
| % App. Total | 0 | 66.7 | 33.3 | | 61.5 | 30.8 | 7.7 | | 0 | 80 | 20 | | 14.3 | 28.6 | 57.1 | | |
| PHF | .000 | .500 | .250 | .375 | .500 | .500 | .250 | .813 | .000 | 1.00 | .250 | .625 | .250 | .500 | .500 | .583 | .778 |

Counts Unlimited, Inc.
PO Box 1178
Corona, CA 92878
(951) 268-6268

City of Fontana
N/S: Sierra Avenue
E/W: Valley Boulevard
Weather: Clear

File Name : FONSIVAAM
Site Code : 06714097
Start Date : 3/11/2014
Page No : 2

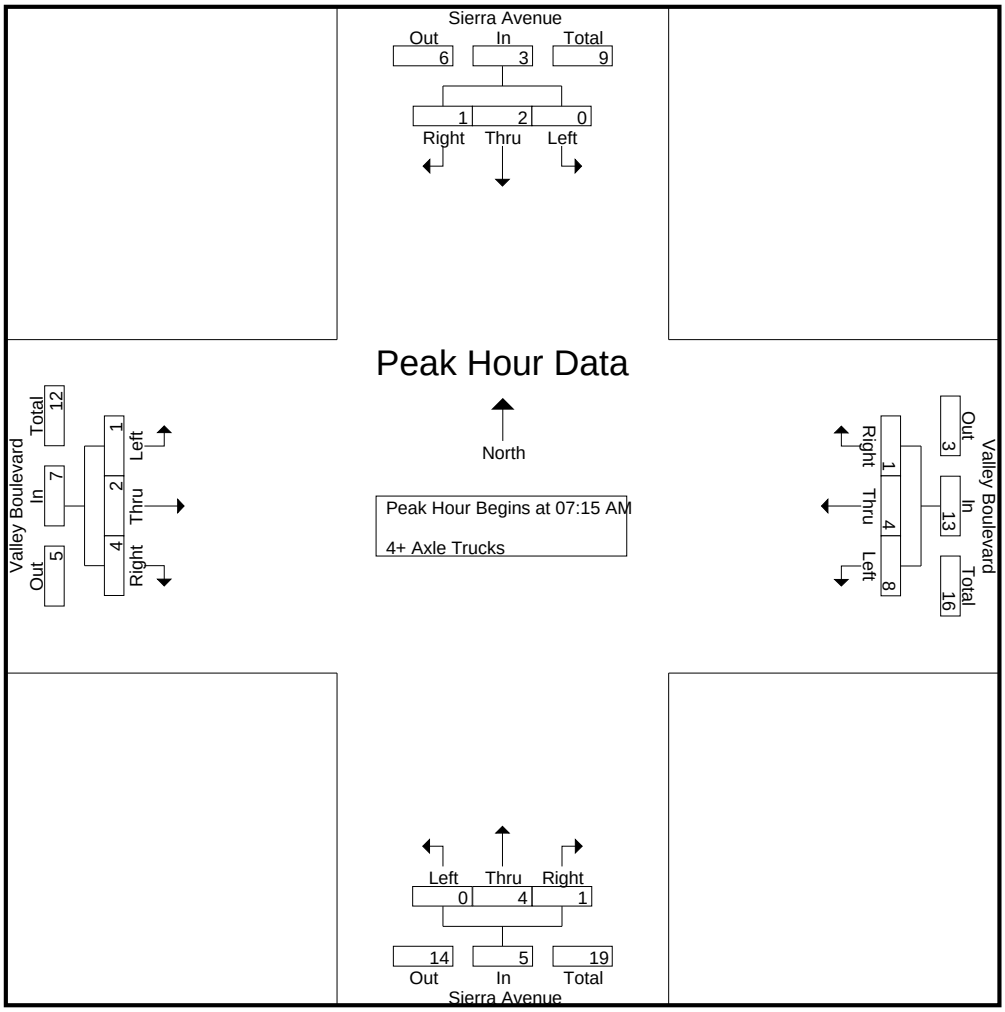


Peak Hour Analysis From 07:15 AM to 08:00 AM - Peak 1 of 1

Peak Hour for Each Approach Begins at:

| | 07:15 AM | | | | 07:15 AM | | | | 07:15 AM | | | | 07:15 AM | | | |
|---|---|---|---|---|---|---|---|---|---|---|---|---|---|---|---|---|
| +0 mins. | 0 | **1** | 0 | 1 | **4** | 0 | 0 | **4** | 0 | **1** | 0 | 1 | 0 | 0 | 1 | 1 |
| +15 mins. | 0 | 1 | **1** | **2** | 3 | 0 | **1** | 4 | 0 | 1 | 0 | 1 | 0 | **1** | 1 | 2 |
| +30 mins. | 0 | 0 | 0 | 0 | 1 | **2** | 0 | 3 | 0 | 1 | 0 | 1 | **1** | 0 | **2** | **3** |
| +45 mins. | 0 | 0 | 0 | 0 | 0 | 2 | 0 | 2 | 0 | 1 | **1** | **2** | 0 | 1 | 0 | 1 |
| Total Volume | 0 | 2 | 1 | 3 | 8 | 4 | 1 | 13 | 0 | 4 | 1 | 5 | 1 | 2 | 4 | 7 |
| % App. Total | 0 | 66.7 | 33.3 | | 61.5 | 30.8 | 7.7 | | 0 | 80 | 20 | | 14.3 | 28.6 | 57.1 | |
| PHF | .000 | .500 | .250 | .375 | .500 | .500 | .250 | .813 | .000 | 1.000 | .250 | .625 | .250 | .500 | .500 | .583 |

Counts Unlimited, Inc.
PO Box 1178
Corona, CA 92878
(951) 268-6268

City of Fontana
N/S: Sierra Avenue
E/W: Valley Boulevard
Weather: Clear

File Name : FONSIVAPM
Site Code : 06714097
Start Date : 3/11/2014
Page No : 1

Groups Printed- Passenger Vehicles - Large 2 Axle Vehicles - 3 Axle Vehicles - 4+ Axle Trucks

| | Sierra Avenue Southbound | | | | Valley Boulevard Westbound | | | | Sierra Avenue Northbound | | | | Valley Boulevard Eastbound | | | | |
|---|---|---|---|---|---|---|---|---|---|---|---|---|---|---|---|---|---|
| Start Time | Left | Thru | Right | App. Total | Left | Thru | Right | App. Total | Left | Thru | Right | App. Total | Left | Thru | Right | App. Total | Int. Total |
| 04:00 PM | 36 | 303 | 42 | 381 | 186 | 111 | 63 | 360 | 77 | 299 | 229 | 605 | 49 | 114 | 101 | 264 | 1610 |
| 04:15 PM | 46 | 286 | 37 | 369 | 170 | 87 | 60 | 317 | 67 | 310 | 218 | 595 | 32 | 120 | 91 | 243 | 1524 |
| 04:30 PM | 42 | 343 | 45 | 430 | 174 | 131 | 58 | 363 | 82 | 304 | 228 | 614 | 58 | 120 | 97 | 275 | 1682 |
| 04:45 PM | 43 | 332 | 41 | 416 | 171 | 132 | 66 | 369 | 77 | 301 | 239 | 617 | 34 | 117 | 83 | 234 | 1636 |
| Total | 167 | 1264 | 165 | 1596 | 701 | 461 | 247 | 1409 | 303 | 1214 | 914 | 2431 | 173 | 471 | 372 | 1016 | 6452 |
| 05:00 PM | 53 | 320 | 43 | 416 | 177 | 118 | 72 | 367 | 72 | 304 | 238 | 614 | 58 | 125 | 81 | 264 | 1661 |
| 05:15 PM | 50 | 330 | 43 | 423 | 153 | 111 | 64 | 328 | 84 | 279 | 202 | 565 | 44 | 124 | 69 | 237 | 1553 |
| 05:30 PM | 55 | 325 | 45 | 425 | 166 | 118 | 33 | 317 | 70 | 286 | 189 | 545 | 54 | 123 | 70 | 247 | 1534 |
| 05:45 PM | 43 | 282 | 24 | 349 | 166 | 137 | 61 | 364 | 70 | 288 | 192 | 550 | 36 | 121 | 59 | 216 | 1479 |
| Total | 201 | 1257 | 155 | 1613 | 662 | 484 | 230 | 1376 | 296 | 1157 | 821 | 2274 | 192 | 493 | 279 | 964 | 6227 |
| Grand Total | 368 | 2521 | 320 | 3209 | 1363 | 945 | 477 | 2785 | 599 | 2371 | 1735 | 4705 | 365 | 964 | 651 | 1980 | 12679 |
| Apprch % | 11.5 | 78.6 | 10 | | 48.9 | 33.9 | 17.1 | | 12.7 | 50.4 | 36.9 | | 18.4 | 48.7 | 32.9 | | |
| Total % | 2.9 | 19.9 | 2.5 | 25.3 | 10.8 | 7.5 | 3.8 | 22 | 4.7 | 18.7 | 13.7 | 37.1 | 2.9 | 7.6 | 5.1 | 15.6 | |
| Passenger Vehicles | 362 | 2489 | 316 | 3167 | 1340 | 922 | 471 | 2733 | 582 | 2326 | 1702 | 4610 | 358 | 928 | 614 | 1900 | 12410 |
| % Passenger Vehicles | 98.4 | 98.7 | 98.8 | 98.7 | 98.3 | 97.6 | 98.7 | 98.1 | 97.2 | 98.1 | 98.1 | 98 | 98.1 | 96.3 | 94.3 | 96 | 97.9 |
| Large 2 Axle Vehicles | 6 | 28 | 3 | 37 | 11 | 10 | 5 | 26 | 7 | 35 | 20 | 62 | 6 | 9 | 12 | 27 | 152 |
| % Large 2 Axle Vehicles | 1.6 | 1.1 | 0.9 | 1.2 | 0.8 | 1.1 | 1 | 0.9 | 1.2 | 1.5 | 1.2 | 1.3 | 1.6 | 0.9 | 1.8 | 1.4 | 1.2 |
| 3 Axle Vehicles | 0 | 2 | 1 | 3 | 7 | 6 | 1 | 14 | 4 | 7 | 3 | 14 | 1 | 17 | 8 | 26 | 57 |
| % 3 Axle Vehicles | 0 | 0.1 | 0.3 | 0.1 | 0.5 | 0.6 | 0.2 | 0.5 | 0.7 | 0.3 | 0.2 | 0.3 | 0.3 | 1.8 | 1.2 | 1.3 | 0.4 |
| 4+ Axle Trucks | 0 | 2 | 0 | 2 | 5 | 7 | 0 | 12 | 6 | 3 | 10 | 19 | 0 | 10 | 17 | 27 | 60 |
| % 4+ Axle Trucks | 0 | 0.1 | 0 | 0.1 | 0.4 | 0.7 | 0 | 0.4 | 1 | 0.1 | 0.6 | 0.4 | 0 | 1 | 2.6 | 1.4 | 0.5 |

| | Sierra Avenue Southbound | | | | Valley Boulevard Westbound | | | | Sierra Avenue Northbound | | | | Valley Boulevard Eastbound | | | | |
|---|---|---|---|---|---|---|---|---|---|---|---|---|---|---|---|---|---|
| Start Time | Left | Thru | Right | App. Total | Left | Thru | Right | App. Total | Left | Thru | Right | App. Total | Left | Thru | Right | App. Total | Int. Total |
| Peak Hour Analysis From 04:00 PM to 05:45 PM - Peak 1 of 1 | | | | | | | | | | | | | | | | | |
| Peak Hour for Entire Intersection Begins at 04:30 PM | | | | | | | | | | | | | | | | | |
| 04:30 PM | 42 | **343** | **45** | **430** | 174 | 131 | 58 | 363 | 82 | **304** | 228 | 614 | **58** | 120 | **97** | **275** | **1682** |
| 04:45 PM | 43 | 332 | 41 | 416 | 171 | **132** | 66 | **369** | 77 | 301 | **239** | **617** | 34 | 117 | 83 | 234 | 1636 |
| 05:00 PM | **53** | 320 | 43 | 416 | **177** | 118 | **72** | 367 | 72 | 304 | 238 | 614 | 58 | **125** | 81 | 264 | 1661 |
| 05:15 PM | 50 | 330 | 43 | 423 | 153 | 111 | 64 | 328 | **84** | 279 | 202 | 565 | 44 | 124 | 69 | 237 | 1553 |
| Total Volume | 188 | 1325 | 172 | 1685 | 675 | 492 | 260 | 1427 | 315 | 1188 | 907 | 2410 | 194 | 486 | 330 | 1010 | 6532 |
| % App. Total | 11.2 | 78.6 | 10.2 | | 47.3 | 34.5 | 18.2 | | 13.1 | 49.3 | 37.6 | | 19.2 | 48.1 | 32.7 | | |
| PHF | .887 | .966 | .956 | .980 | .953 | .932 | .903 | .967 | .938 | .977 | .949 | .976 | .836 | .972 | .851 | .918 | .971 |

Counts Unlimited, Inc.
PO Box 1178
Corona, CA 92878
(951) 268-6268

City of Fontana
N/S: Sierra Avenue
E/W: Valley Boulevard
Weather: Clear

File Name : FONSIVAPM
Site Code : 06714097
Start Date : 3/11/2014
Page No : 2

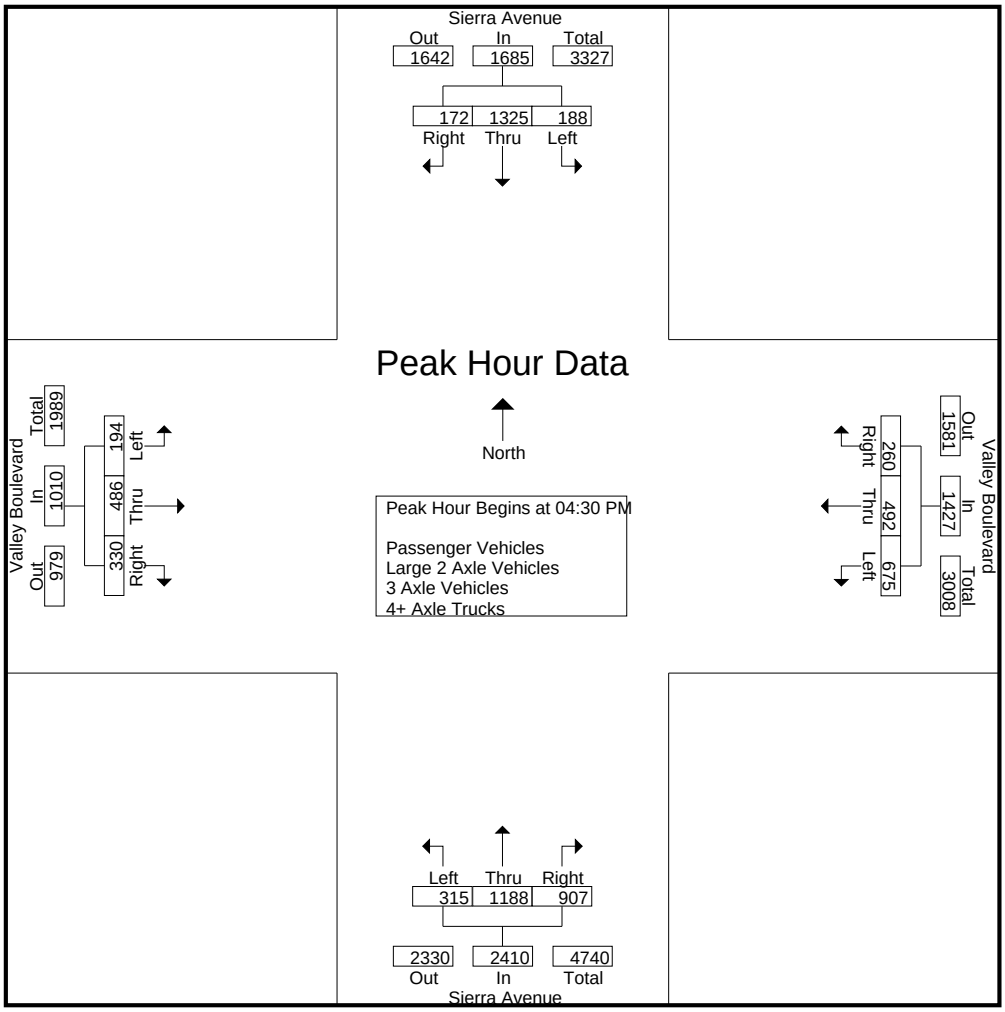


Peak Hour Analysis From 04:00 PM to 05:45 PM - Peak 1 of 1

Peak Hour for Each Approach Begins at:

| | 04:30 PM | | | | 04:30 PM | | | | 04:15 PM | | | | 04:00 PM | | | |
|---|---|---|---|---|---|---|---|---|---|---|---|---|---|---|---|---|
| +0 mins. | 42 | **343** | **45** | **430** | 174 | 131 | 58 | 363 | 67 | **310** | 218 | 595 | 49 | 114 | **101** | 264 |
| +15 mins. | 43 | 332 | 41 | 416 | 171 | **132** | 66 | **369** | **82** | 304 | 228 | 614 | 32 | **120** | 91 | 243 |
| +30 mins. | **53** | 320 | 43 | 416 | **177** | 118 | **72** | 367 | 77 | 301 | **239** | **617** | **58** | 120 | 97 | **275** |
| +45 mins. | 50 | 330 | 43 | 423 | 153 | 111 | 64 | 328 | 72 | 304 | 238 | 614 | 34 | 117 | 83 | 234 |
| Total Volume | 188 | 1325 | 172 | 1685 | 675 | 492 | 260 | 1427 | 298 | 1219 | 923 | 2440 | 173 | 471 | 372 | 1016 |
| % App. Total | 11.2 | 78.6 | 10.2 | | 47.3 | 34.5 | 18.2 | | 12.2 | 50 | 37.8 | | 17 | 46.4 | 36.6 | |
| PHF | .887 | .966 | .956 | .980 | .953 | .932 | .903 | .967 | .909 | .983 | .965 | .989 | .746 | .981 | .921 | .924 |

Counts Unlimited, Inc.
PO Box 1178
Corona, CA 92878
(951) 268-6268

City of Fontana
N/S: Sierra Avenue
E/W: Valley Boulevard
Weather: Clear

File Name : FONSIVAPM
Site Code : 06714097
Start Date : 3/11/2014
Page No : 1

Groups Printed- Passenger Vehicles

| | Sierra Avenue Southbound | | | | Valley Boulevard Westbound | | | | Sierra Avenue Northbound | | | | Valley Boulevard Eastbound | | | | |
|---|---|---|---|---|---|---|---|---|---|---|---|---|---|---|---|---|---|
| Start Time | Left | Thru | Right | App. Total | Left | Thru | Right | App. Total | Left | Thru | Right | App. Total | Left | Thru | Right | App. Total | Int. Total |
| 04:00 PM | 36 | 301 | 42 | 379 | 182 | 106 | 63 | 351 | 76 | 289 | 223 | 588 | 48 | 110 | 96 | 254 | 1572 |
| 04:15 PM | 44 | 283 | 36 | 363 | 165 | 86 | 59 | 310 | 62 | 300 | 216 | 578 | 32 | 113 | 89 | 234 | 1485 |
| 04:30 PM | 41 | 338 | 44 | 423 | 171 | 129 | 57 | 357 | 80 | 301 | 224 | 605 | 58 | 118 | 91 | 267 | 1652 |
| 04:45 PM | 42 | 330 | 41 | 413 | 169 | 129 | 66 | 364 | 76 | 293 | 234 | 603 | 34 | 113 | 75 | 222 | 1602 |
| Total | 163 | 1252 | 163 | 1578 | 687 | 450 | 245 | 1382 | 294 | 1183 | 897 | 2374 | 172 | 454 | 351 | 977 | 6311 |
| | | | | | | | | | | | | | | | | | |
| 05:00 PM | 53 | 315 | 43 | 411 | 176 | 115 | 70 | 361 | 69 | 298 | 236 | 603 | 54 | 117 | 75 | 246 | 1621 |
| 05:15 PM | 50 | 323 | 43 | 416 | 152 | 110 | 62 | 324 | 81 | 277 | 200 | 558 | 44 | 120 | 65 | 229 | 1527 |
| 05:30 PM | 54 | 321 | 43 | 418 | 162 | 115 | 33 | 310 | 69 | 283 | 185 | 537 | 53 | 119 | 67 | 239 | 1504 |
| 05:45 PM | 42 | 278 | 24 | 344 | 163 | 132 | 61 | 356 | 69 | 285 | 184 | 538 | 35 | 118 | 56 | 209 | 1447 |
| Total | 199 | 1237 | 153 | 1589 | 653 | 472 | 226 | 1351 | 288 | 1143 | 805 | 2236 | 186 | 474 | 263 | 923 | 6099 |
| | | | | | | | | | | | | | | | | | |
| Grand Total | 362 | 2489 | 316 | 3167 | 1340 | 922 | 471 | 2733 | 582 | 2326 | 1702 | 4610 | 358 | 928 | 614 | 1900 | 12410 |
| Apprch % | 11.4 | 78.6 | 10 | | 49 | 33.7 | 17.2 | | 12.6 | 50.5 | 36.9 | | 18.8 | 48.8 | 32.3 | | |
| Total % | 2.9 | 20.1 | 2.5 | 25.5 | 10.8 | 7.4 | 3.8 | 22 | 4.7 | 18.7 | 13.7 | 37.1 | 2.9 | 7.5 | 4.9 | 15.3 | |

| | Sierra Avenue Southbound | | | | Valley Boulevard Westbound | | | | Sierra Avenue Northbound | | | | Valley Boulevard Eastbound | | | | |
|---|---|---|---|---|---|---|---|---|---|---|---|---|---|---|---|---|---|
| Start Time | Left | Thru | Right | App. Total | Left | Thru | Right | App. Total | Left | Thru | Right | App. Total | Left | Thru | Right | App. Total | Int. Total |
| Peak Hour Analysis From 04:30 PM to 05:15 PM - Peak 1 of 1 | | | | | | | | | | | | | | | | | |
| Peak Hour for Entire Intersection Begins at 04:30 PM | | | | | | | | | | | | | | | | | |
| 04:30 PM | 41 | **338** | **44** | **423** | 171 | **129** | 57 | 357 | 80 | **301** | 224 | **605** | **58** | 118 | **91** | **267** | **1652** |
| 04:45 PM | 42 | 330 | 41 | 413 | 169 | 129 | 66 | **364** | 76 | 293 | 234 | 603 | 34 | 113 | 75 | 222 | 1602 |
| 05:00 PM | **53** | 315 | 43 | 411 | **176** | 115 | **70** | 361 | 69 | 298 | **236** | 603 | 54 | 117 | 75 | 246 | 1621 |
| 05:15 PM | 50 | 323 | 43 | 416 | 152 | 110 | 62 | 324 | **81** | 277 | 200 | 558 | 44 | **120** | 65 | 229 | 1527 |
| Total Volume | 186 | 1306 | 171 | 1663 | 668 | 483 | 255 | 1406 | 306 | 1169 | 894 | 2369 | 190 | 468 | 306 | 964 | 6402 |
| % App. Total | 11.2 | 78.5 | 10.3 | | 47.5 | 34.4 | 18.1 | | 12.9 | 49.3 | 37.7 | | 19.7 | 48.5 | 31.7 | | |
| PHF | .877 | .966 | .972 | .983 | .949 | .936 | .911 | .966 | .944 | .971 | .947 | .979 | .819 | .975 | .841 | .903 | .969 |

Counts Unlimited, Inc.
PO Box 1178
Corona, CA 92878
(951) 268-6268

City of Fontana
N/S: Sierra Avenue
E/W: Valley Boulevard
Weather: Clear

File Name : FONSIVAPM
Site Code : 06714097
Start Date : 3/11/2014
Page No : 2

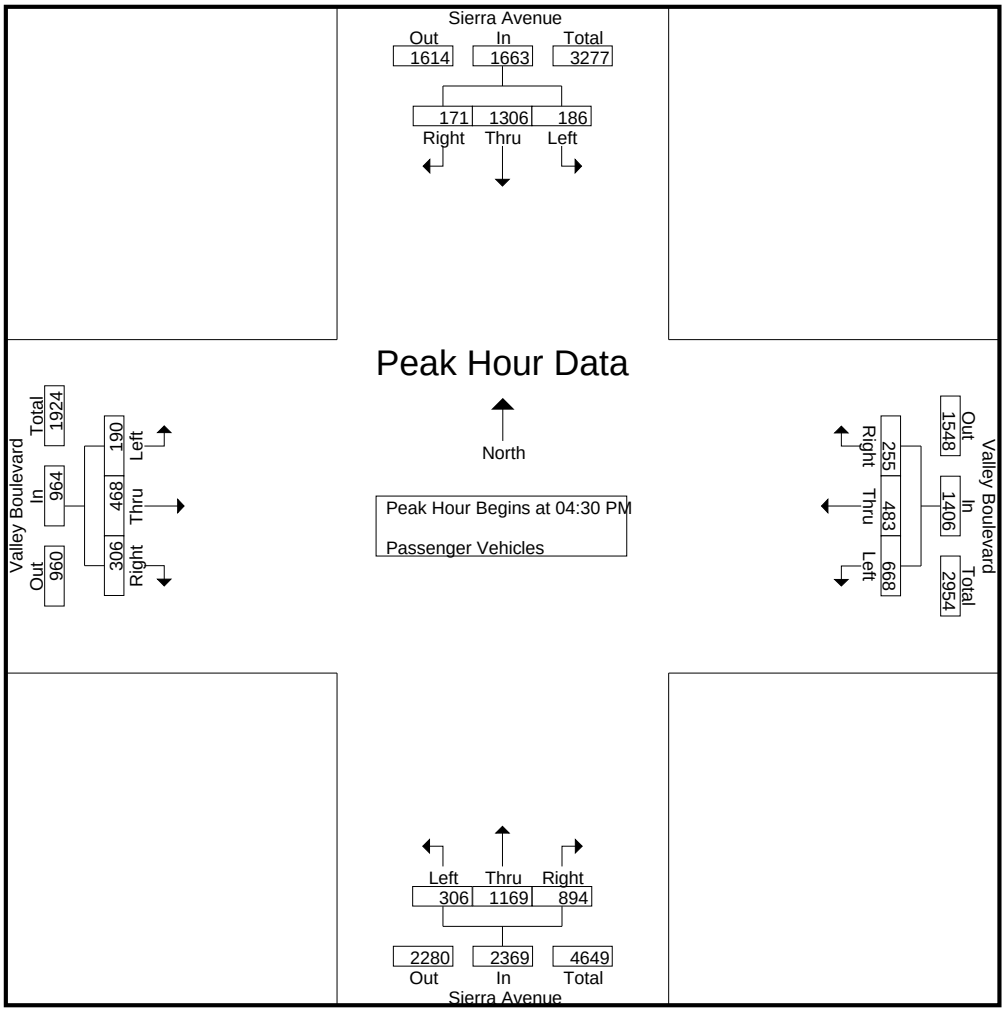


Peak Hour Analysis From 04:30 PM to 05:15 PM - Peak 1 of 1

Peak Hour for Each Approach Begins at:

| | 04:30 PM | | | | 04:30 PM | | | | 04:30 PM | | | | 04:30 PM | | | |
|---|---|---|---|---|---|---|---|---|---|---|---|---|---|---|---|---|
| +0 mins. | 41 | **338** | **44** | **423** | 171 | **129** | 57 | 357 | 80 | **301** | 224 | **605** | **58** | 118 | **91** | **267** |
| +15 mins. | 42 | 330 | 41 | 413 | 169 | 129 | 66 | **364** | 76 | 293 | 234 | 603 | 34 | 113 | 75 | 222 |
| +30 mins. | **53** | 315 | 43 | 411 | **176** | 115 | **70** | 361 | 69 | 298 | **236** | 603 | 54 | 117 | 75 | 246 |
| +45 mins. | 50 | 323 | 43 | 416 | 152 | 110 | 62 | 324 | **81** | 277 | 200 | 558 | 44 | **120** | 65 | 229 |
| Total Volume | 186 | 1306 | 171 | 1663 | 668 | 483 | 255 | 1406 | 306 | 1169 | 894 | 2369 | 190 | 468 | 306 | 964 |
| % App. Total | 11.2 | 78.5 | 10.3 | | 47.5 | 34.4 | 18.1 | | 12.9 | 49.3 | 37.7 | | 19.7 | 48.5 | 31.7 | |
| PHF | .877 | .966 | .972 | .983 | .949 | .936 | .911 | .966 | .944 | .971 | .947 | .979 | .819 | .975 | .841 | .903 |

Counts Unlimited, Inc.
PO Box 1178
Corona, CA 92878
(951) 268-6268

City of Fontana
N/S: Sierra Avenue
E/W: Valley Boulevard
Weather: Clear

File Name : FONSIVAPM
Site Code : 06714097
Start Date : 3/11/2014
Page No : 1

Groups Printed- Large 2 Axle Vehicles

| | Sierra Avenue Southbound | | | | Valley Boulevard Westbound | | | | Sierra Avenue Northbound | | | | Valley Boulevard Eastbound | | | | |
|---|---|---|---|---|---|---|---|---|---|---|---|---|---|---|---|---|---|
| Start Time | Left | Thru | Right | App. Total | Left | Thru | Right | App. Total | Left | Thru | Right | App. Total | Left | Thru | Right | App. Total | Int. Total |
| 04:00 PM | 0 | 2 | 0 | 2 | 2 | 3 | 0 | 5 | 1 | 9 | 3 | 13 | 1 | 0 | 1 | 2 | 22 |
| 04:15 PM | 2 | 3 | 1 | 6 | 2 | 1 | 1 | 4 | 2 | 8 | 2 | 12 | 0 | 2 | 1 | 3 | 25 |
| 04:30 PM | 1 | 4 | 1 | 6 | 2 | 2 | 1 | 5 | 1 | 3 | 4 | 8 | 0 | 0 | 3 | 3 | 22 |
| 04:45 PM | 1 | 2 | 0 | 3 | 2 | 2 | 0 | 4 | 0 | 3 | 4 | 7 | 0 | 1 | 3 | 4 | 18 |
| Total | 4 | 11 | 2 | 17 | 8 | 8 | 2 | 18 | 4 | 23 | 13 | 40 | 1 | 3 | 8 | 12 | 87 |
| 05:00 PM | 0 | 4 | 0 | 4 | 0 | 1 | 2 | 3 | 2 | 5 | 1 | 8 | 3 | 2 | 2 | 7 | 22 |
| 05:15 PM | 0 | 6 | 0 | 6 | 1 | 0 | 1 | 2 | 0 | 2 | 1 | 3 | 0 | 1 | 0 | 1 | 12 |
| 05:30 PM | 1 | 4 | 1 | 6 | 1 | 1 | 0 | 2 | 1 | 3 | 1 | 5 | 1 | 2 | 1 | 4 | 17 |
| 05:45 PM | 1 | 3 | 0 | 4 | 1 | 0 | 0 | 1 | 0 | 2 | 4 | 6 | 1 | 1 | 1 | 3 | 14 |
| Total | 2 | 17 | 1 | 20 | 3 | 2 | 3 | 8 | 3 | 12 | 7 | 22 | 5 | 6 | 4 | 15 | 65 |
| Grand Total | 6 | 28 | 3 | 37 | 11 | 10 | 5 | 26 | 7 | 35 | 20 | 62 | 6 | 9 | 12 | 27 | 152 |
| Apprch % | 16.2 | 75.7 | 8.1 | | 42.3 | 38.5 | 19.2 | | 11.3 | 56.5 | 32.3 | | 22.2 | 33.3 | 44.4 | | |
| Total % | 3.9 | 18.4 | 2 | 24.3 | 7.2 | 6.6 | 3.3 | 17.1 | 4.6 | 23 | 13.2 | 40.8 | 3.9 | 5.9 | 7.9 | 17.8 | |

| | Sierra Avenue Southbound | | | | Valley Boulevard Westbound | | | | Sierra Avenue Northbound | | | | Valley Boulevard Eastbound | | | | |
|---|---|---|---|---|---|---|---|---|---|---|---|---|---|---|---|---|---|
| Start Time | Left | Thru | Right | App. Total | Left | Thru | Right | App. Total | Left | Thru | Right | App. Total | Left | Thru | Right | App. Total | Int. Total |
| Peak Hour Analysis From 04:30 PM to 05:15 PM - Peak 1 of 1 | | | | | | | | | | | | | | | | | |
| Peak Hour for Entire Intersection Begins at 04:30 PM | | | | | | | | | | | | | | | | | |
| 04:30 PM | **1** | 4 | **1** | **6** | **2** | **2** | 1 | **5** | 1 | 3 | **4** | **8** | 0 | 0 | **3** | 3 | **22** |
| 04:45 PM | 1 | 2 | 0 | 3 | 2 | 2 | 0 | 4 | 0 | 3 | 4 | 7 | 0 | 1 | 3 | 4 | 18 |
| 05:00 PM | 0 | 4 | 0 | 4 | 0 | 1 | **2** | 3 | **2** | **5** | 1 | 8 | **3** | **2** | 2 | **7** | 22 |
| 05:15 PM | 0 | **6** | 0 | 6 | 1 | 0 | 1 | 2 | 0 | 2 | 1 | 3 | 0 | 1 | 0 | 1 | 12 |
| Total Volume | 2 | 16 | 1 | 19 | 5 | 5 | 4 | 14 | 3 | 13 | 10 | 26 | 3 | 4 | 8 | 15 | 74 |
| % App. Total | 10.5 | 84.2 | 5.3 | | 35.7 | 35.7 | 28.6 | | 11.5 | 50 | 38.5 | | 20 | 26.7 | 53.3 | | |
| PHF | .500 | .667 | .250 | .792 | .625 | .625 | .500 | .700 | .375 | .650 | .625 | .813 | .250 | .500 | .667 | .536 | .841 |

Counts Unlimited, Inc.
PO Box 1178
Corona, CA 92878
(951) 268-6268

City of Fontana
N/S: Sierra Avenue
E/W: Valley Boulevard
Weather: Clear

File Name : FONSIVAPM
Site Code : 06714097
Start Date : 3/11/2014
Page No : 2

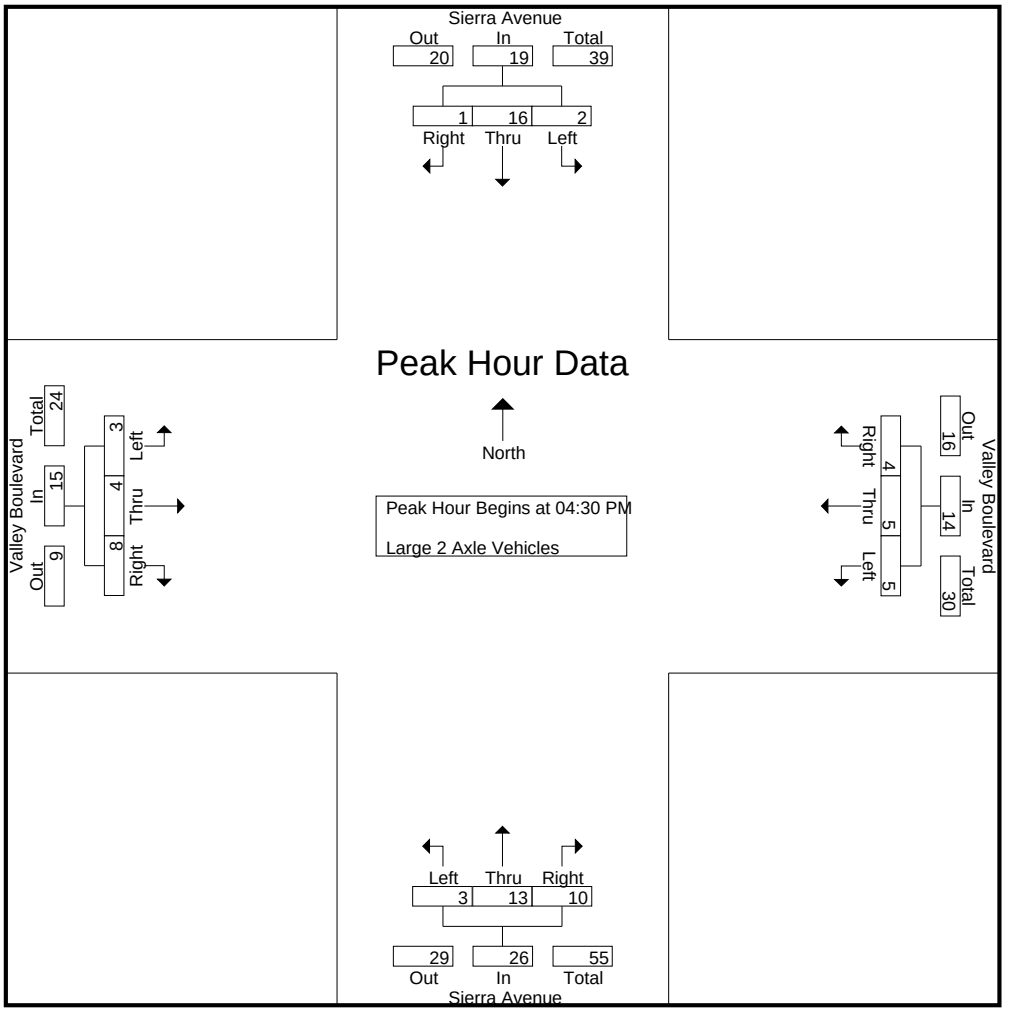


Peak Hour Analysis From 04:30 PM to 05:15 PM - Peak 1 of 1

Peak Hour for Each Approach Begins at:

| | 04:30 PM | | | | 04:30 PM | | | | 04:30 PM | | | | 04:30 PM | | | |
|---|---|---|---|---|---|---|---|---|---|---|---|---|---|---|---|---|
| +0 mins. | **1** | 4 | **1** | **6** | **2** | **2** | 1 | **5** | 1 | 3 | **4** | **8** | 0 | 0 | **3** | 3 |
| +15 mins. | 1 | 2 | 0 | 3 | 2 | 2 | 0 | 4 | 0 | 3 | 4 | 7 | 0 | 1 | 3 | 4 |
| +30 mins. | 0 | 4 | 0 | 4 | 0 | 1 | **2** | 3 | **2** | **5** | 1 | 8 | **3** | **2** | 2 | **7** |
| +45 mins. | 0 | **6** | 0 | 6 | 1 | 0 | 1 | 2 | 0 | 2 | 1 | 3 | 0 | 1 | 0 | 1 |
| Total Volume | 2 | 16 | 1 | 19 | 5 | 5 | 4 | 14 | 3 | 13 | 10 | 26 | 3 | 4 | 8 | 15 |
| % App. Total | 10.5 | 84.2 | 5.3 | | 35.7 | 35.7 | 28.6 | | 11.5 | 50 | 38.5 | | 20 | 26.7 | 53.3 | |
| PHF | .500 | .667 | .250 | .792 | .625 | .625 | .500 | .700 | .375 | .650 | .625 | .813 | .250 | .500 | .667 | .536 |

Counts Unlimited, Inc.
PO Box 1178
Corona, CA 92878
(951) 268-6268

City of Fontana
N/S: Sierra Avenue
E/W: Valley Boulevard
Weather: Clear

File Name : FONSIVAPM
Site Code : 06714097
Start Date : 3/11/2014
Page No : 1

Groups Printed- 3 Axle Vehicles

| | Sierra Avenue Southbound | | | | Valley Boulevard Westbound | | | | Sierra Avenue Northbound | | | | Valley Boulevard Eastbound | | | | |
|---|---|---|---|---|---|---|---|---|---|---|---|---|---|---|---|---|---|
| Start Time | Left | Thru | Right | App. Total | Left | Thru | Right | App. Total | Left | Thru | Right | App. Total | Left | Thru | Right | App. Total | Int. Total |
| 04:00 PM | 0 | 0 | 0 | 0 | 2 | 1 | 0 | 3 | 0 | 1 | 0 | 1 | 0 | 2 | 0 | 2 | 6 |
| 04:15 PM | 0 | 0 | 0 | 0 | 1 | 0 | 0 | 1 | 1 | 1 | 0 | 2 | 0 | 3 | 1 | 4 | 7 |
| 04:30 PM | 0 | 1 | 0 | 1 | 0 | 0 | 0 | 0 | 0 | 0 | 0 | 0 | 0 | 1 | 3 | 4 | 5 |
| 04:45 PM | 0 | 0 | 0 | 0 | 0 | 1 | 0 | 1 | 0 | 4 | 0 | 4 | 0 | 3 | 2 | 5 | 10 |
| Total | 0 | 1 | 0 | 1 | 3 | 2 | 0 | 5 | 1 | 6 | 0 | 7 | 0 | 9 | 6 | 15 | 28 |
| 05:00 PM | 0 | 0 | 0 | 0 | 1 | 2 | 0 | 3 | 0 | 0 | 0 | 0 | 1 | 4 | 0 | 5 | 8 |
| 05:15 PM | 0 | 0 | 0 | 0 | 0 | 0 | 1 | 1 | 2 | 0 | 0 | 2 | 0 | 2 | 1 | 3 | 6 |
| 05:30 PM | 0 | 0 | 1 | 1 | 2 | 0 | 0 | 2 | 0 | 0 | 2 | 2 | 0 | 2 | 0 | 2 | 7 |
| 05:45 PM | 0 | 1 | 0 | 1 | 1 | 2 | 0 | 3 | 1 | 1 | 1 | 3 | 0 | 0 | 1 | 1 | 8 |
| Total | 0 | 1 | 1 | 2 | 4 | 4 | 1 | 9 | 3 | 1 | 3 | 7 | 1 | 8 | 2 | 11 | 29 |
| Grand Total | 0 | 2 | 1 | 3 | 7 | 6 | 1 | 14 | 4 | 7 | 3 | 14 | 1 | 17 | 8 | 26 | 57 |
| Apprch % | 0 | 66.7 | 33.3 | | 50 | 42.9 | 7.1 | | 28.6 | 50 | 21.4 | | 3.8 | 65.4 | 30.8 | | |
| Total % | 0 | 3.5 | 1.8 | 5.3 | 12.3 | 10.5 | 1.8 | 24.6 | 7 | 12.3 | 5.3 | 24.6 | 1.8 | 29.8 | 14 | 45.6 | |

| | Sierra Avenue Southbound | | | | Valley Boulevard Westbound | | | | Sierra Avenue Northbound | | | | Valley Boulevard Eastbound | | | | |
|---|---|---|---|---|---|---|---|---|---|---|---|---|---|---|---|---|---|
| Start Time | Left | Thru | Right | App. Total | Left | Thru | Right | App. Total | Left | Thru | Right | App. Total | Left | Thru | Right | App. Total | Int. Total |
| Peak Hour Analysis From 04:30 PM to 05:15 PM - Peak 1 of 1 | | | | | | | | | | | | | | | | | |
| Peak Hour for Entire Intersection Begins at 04:30 PM | | | | | | | | | | | | | | | | | |
| 04:30 PM | 0 | **1** | 0 | **1** | 0 | 0 | 0 | 0 | 0 | 0 | 0 | 0 | 0 | 1 | **3** | 4 | 5 |
| 04:45 PM | 0 | 0 | 0 | 0 | 0 | 1 | 0 | 1 | 0 | **4** | 0 | **4** | 0 | 3 | 2 | **5** | **10** |
| 05:00 PM | 0 | 0 | 0 | 0 | **1** | **2** | 0 | **3** | 0 | 0 | 0 | 0 | **1** | **4** | 0 | 5 | 8 |
| 05:15 PM | 0 | 0 | 0 | 0 | 0 | 0 | **1** | 1 | **2** | 0 | 0 | 2 | 0 | 2 | 1 | 3 | 6 |
| Total Volume | 0 | 1 | 0 | 1 | 1 | 3 | 1 | 5 | 2 | 4 | 0 | 6 | 1 | 10 | 6 | 17 | 29 |
| % App. Total | 0 | 100 | 0 | | 20 | 60 | 20 | | 33.3 | 66.7 | 0 | | 5.9 | 58.8 | 35.3 | | |
| PHF | .000 | .250 | .000 | .250 | .250 | .375 | .250 | .417 | .250 | .250 | .000 | .375 | .250 | .625 | .500 | .850 | .725 |

Counts Unlimited, Inc.
PO Box 1178
Corona, CA 92878
(951) 268-6268

City of Fontana
N/S: Sierra Avenue
E/W: Valley Boulevard
Weather: Clear

File Name : FONSIVAPM
Site Code : 06714097
Start Date : 3/11/2014
Page No : 2

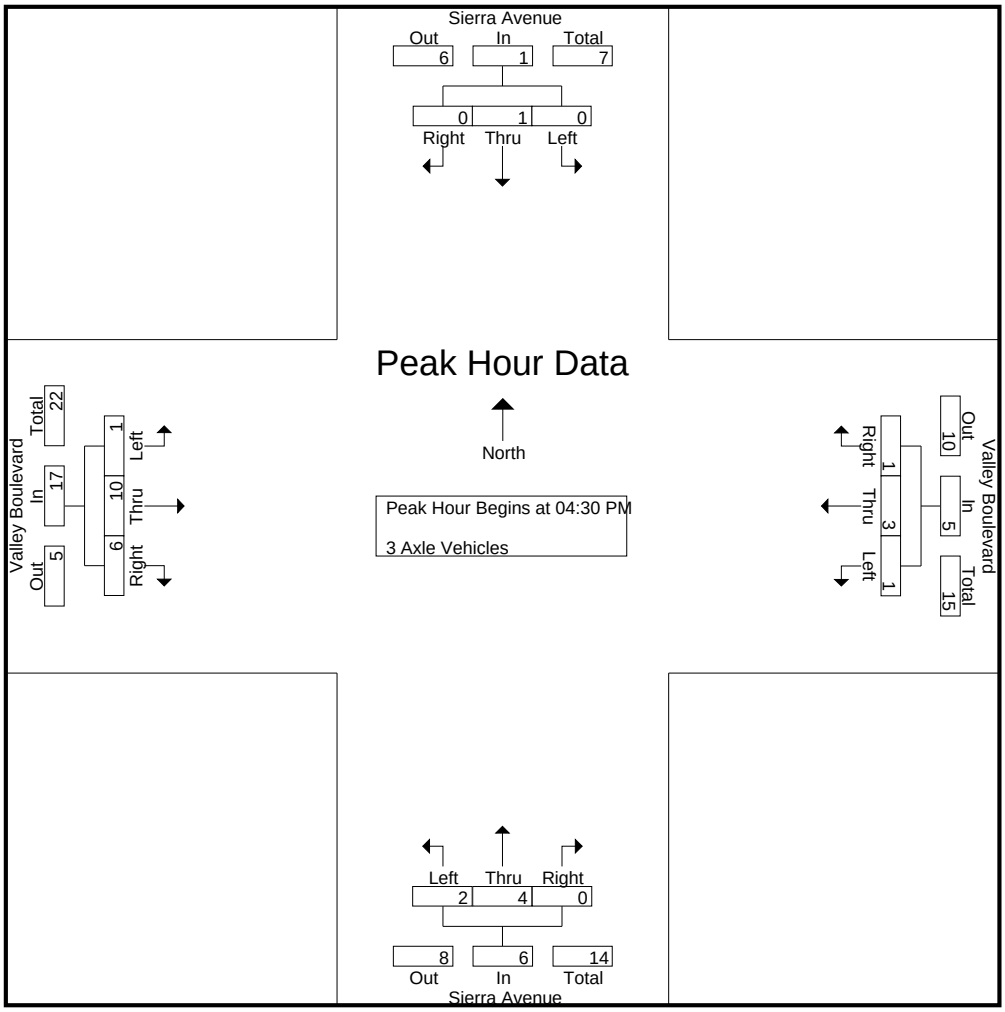


Peak Hour Analysis From 04:30 PM to 05:15 PM - Peak 1 of 1

Peak Hour for Each Approach Begins at:

| | 04:30 PM | | | | 04:30 PM | | | | 04:30 PM | | | | 04:30 PM | | | |
|---|---|---|---|---|---|---|---|---|---|---|---|---|---|---|---|---|
| +0 mins. | 0 | **1** | 0 | **1** | 0 | 0 | 0 | 0 | 0 | 0 | 0 | 0 | 0 | 1 | **3** | 4 |
| +15 mins. | 0 | 0 | 0 | 0 | 0 | 1 | 0 | 1 | 0 | **4** | 0 | **4** | 0 | 3 | 2 | **5** |
| +30 mins. | 0 | 0 | 0 | 0 | **1** | **2** | 0 | **3** | 0 | 0 | 0 | 0 | **1** | **4** | 0 | 5 |
| +45 mins. | 0 | 0 | 0 | 0 | 0 | 0 | **1** | 1 | **2** | 0 | 0 | 2 | 0 | 2 | 1 | 3 |
| Total Volume | 0 | 1 | 0 | 1 | 1 | 3 | 1 | 5 | 2 | 4 | 0 | 6 | 1 | 10 | 6 | 17 |
| % App. Total | 0 | 100 | 0 | | 20 | 60 | 20 | | 33.3 | 66.7 | 0 | | 5.9 | 58.8 | 35.3 | |
| PHF | .000 | .250 | .000 | .250 | .250 | .375 | .250 | .417 | .250 | .250 | .000 | .375 | .250 | .625 | .500 | .850 |

Counts Unlimited, Inc.
PO Box 1178
Corona, CA 92878
(951) 268-6268

City of Fontana
N/S: Sierra Avenue
E/W: Valley Boulevard
Weather: Clear

File Name : FONSIVAPM
Site Code : 06714097
Start Date : 3/11/2014
Page No : 1

Groups Printed- 4+ Axle Trucks

| | Sierra Avenue Southbound | | | | Valley Boulevard Westbound | | | | Sierra Avenue Northbound | | | | Valley Boulevard Eastbound | | | | |
|---|---|---|---|---|---|---|---|---|---|---|---|---|---|---|---|---|---|
| Start Time | Left | Thru | Right | App. Total | Left | Thru | Right | App. Total | Left | Thru | Right | App. Total | Left | Thru | Right | App. Total | Int. Total |
| 04:00 PM | 0 | 0 | 0 | 0 | 0 | 1 | 0 | 1 | 0 | 0 | 3 | 3 | 0 | 2 | 4 | 6 | 10 |
| 04:15 PM | 0 | 0 | 0 | 0 | 2 | 0 | 0 | 2 | 2 | 1 | 0 | 3 | 0 | 2 | 0 | 2 | 7 |
| 04:30 PM | 0 | 0 | 0 | 0 | 1 | 0 | 0 | 1 | 1 | 0 | 0 | 1 | 0 | 1 | 0 | 1 | 3 |
| 04:45 PM | 0 | 0 | 0 | 0 | 0 | 0 | 0 | 0 | 1 | 1 | 1 | 3 | 0 | 0 | 3 | 3 | 6 |
| Total | 0 | 0 | 0 | 0 | 3 | 1 | 0 | 4 | 4 | 2 | 4 | 10 | 0 | 5 | 7 | 12 | 26 |
| 05:00 PM | 0 | 1 | 0 | 1 | 0 | 0 | 0 | 0 | 1 | 1 | 1 | 3 | 0 | 2 | 4 | 6 | 10 |
| 05:15 PM | 0 | 1 | 0 | 1 | 0 | 1 | 0 | 1 | 1 | 0 | 1 | 2 | 0 | 1 | 3 | 4 | 8 |
| 05:30 PM | 0 | 0 | 0 | 0 | 1 | 2 | 0 | 3 | 0 | 0 | 1 | 1 | 0 | 0 | 2 | 2 | 6 |
| 05:45 PM | 0 | 0 | 0 | 0 | 1 | 3 | 0 | 4 | 0 | 0 | 3 | 3 | 0 | 2 | 1 | 3 | 10 |
| Total | 0 | 2 | 0 | 2 | 2 | 6 | 0 | 8 | 2 | 1 | 6 | 9 | 0 | 5 | 10 | 15 | 34 |
| Grand Total | 0 | 2 | 0 | 2 | 5 | 7 | 0 | 12 | 6 | 3 | 10 | 19 | 0 | 10 | 17 | 27 | 60 |
| Apprch % | 0 | 100 | 0 | | 41.7 | 58.3 | 0 | | 31.6 | 15.8 | 52.6 | | 0 | 37 | 63 | | |
| Total % | 0 | 3.3 | 0 | 3.3 | 8.3 | 11.7 | 0 | 20 | 10 | 5 | 16.7 | 31.7 | 0 | 16.7 | 28.3 | 45 | |

| | Sierra Avenue Southbound | | | | Valley Boulevard Westbound | | | | Sierra Avenue Northbound | | | | Valley Boulevard Eastbound | | | | |
|---|---|---|---|---|---|---|---|---|---|---|---|---|---|---|---|---|---|
| Start Time | Left | Thru | Right | App. Total | Left | Thru | Right | App. Total | Left | Thru | Right | App. Total | Left | Thru | Right | App. Total | Int. Total |
| Peak Hour Analysis From 04:30 PM to 05:15 PM - Peak 1 of 1 | | | | | | | | | | | | | | | | | |
| Peak Hour for Entire Intersection Begins at 04:30 PM | | | | | | | | | | | | | | | | | |
| 04:30 PM | 0 | 0 | 0 | 0 | **1** | 0 | 0 | **1** | **1** | 0 | 0 | 1 | 0 | 1 | 0 | 1 | 3 |
| 04:45 PM | 0 | 0 | 0 | 0 | 0 | 0 | 0 | 0 | 1 | **1** | **1** | **3** | 0 | 0 | 3 | 3 | 6 |
| 05:00 PM | 0 | **1** | 0 | **1** | 0 | 0 | 0 | 0 | 1 | 1 | 1 | 3 | 0 | **2** | **4** | **6** | **10** |
| 05:15 PM | 0 | 1 | 0 | 1 | 0 | **1** | 0 | 1 | 1 | 0 | 1 | 2 | 0 | 1 | 3 | 4 | 8 |
| Total Volume | 0 | 2 | 0 | 2 | 1 | 1 | 0 | 2 | 4 | 2 | 3 | 9 | 0 | 4 | 10 | 14 | 27 |
| % App. Total | 0 | 100 | 0 | | 50 | 50 | 0 | | 44.4 | 22.2 | 33.3 | | 0 | 28.6 | 71.4 | | |
| PHF | .000 | .500 | .000 | .500 | .250 | .250 | .000 | .500 | 1.00 | .500 | .750 | .750 | .000 | .500 | .625 | .583 | .675 |

Counts Unlimited, Inc.
PO Box 1178
Corona, CA 92878
(951) 268-6268

City of Fontana
N/S: Sierra Avenue
E/W: Valley Boulevard
Weather: Clear

File Name : FONSIVAPM
Site Code : 06714097
Start Date : 3/11/2014
Page No : 2

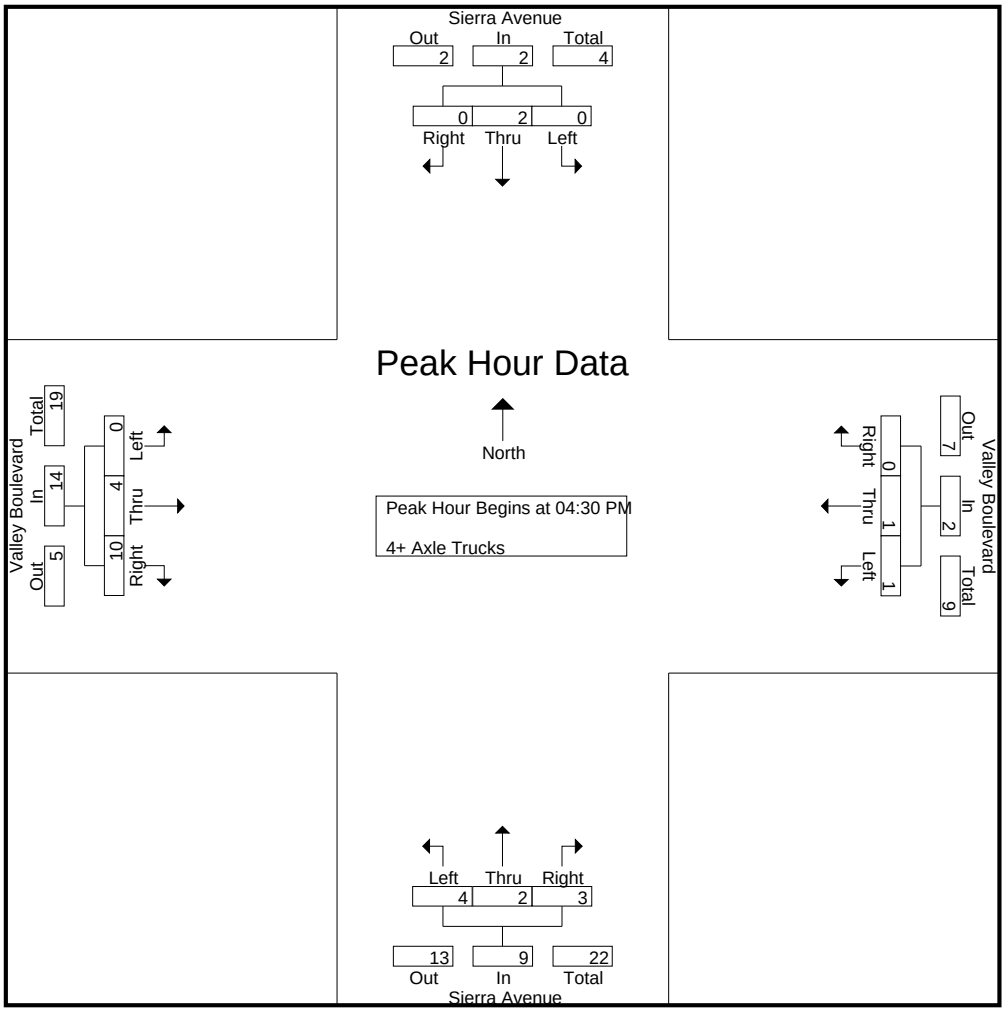


Peak Hour Analysis From 04:30 PM to 05:15 PM - Peak 1 of 1

Peak Hour for Each Approach Begins at:

| | 04:30 PM | | | | 04:30 PM | | | | 04:30 PM | | | | 04:30 PM | | | |
|---|---|---|---|---|---|---|---|---|---|---|---|---|---|---|---|---|
| +0 mins. | 0 | 0 | 0 | 0 | **1** | 0 | 0 | **1** | **1** | 0 | 0 | 1 | 0 | 1 | 0 | 1 |
| +15 mins. | 0 | 0 | 0 | 0 | 0 | 0 | 0 | 0 | 1 | **1** | **1** | **3** | 0 | 0 | 3 | 3 |
| +30 mins. | 0 | **1** | 0 | **1** | 0 | 0 | 0 | 0 | 1 | 1 | 1 | 3 | 0 | **2** | **4** | **6** |
| +45 mins. | 0 | 1 | 0 | 1 | 0 | **1** | 0 | 1 | 1 | 0 | 1 | 2 | 0 | 1 | 3 | 4 |
| Total Volume | 0 | 2 | 0 | 2 | 1 | 1 | 0 | 2 | 4 | 2 | 3 | 9 | 0 | 4 | 10 | 14 |
| % App. Total | 0 | 100 | 0 | | 50 | 50 | 0 | | 44.4 | 22.2 | 33.3 | | 0 | 28.6 | 71.4 | |
| PHF | .000 | .500 | .000 | .500 | .250 | .250 | .000 | .500 | 1.000 | .500 | .750 | .750 | .000 | .500 | .625 | .583 |

Counts Unlimited, Inc.
PO Box 1178
Corona, CA 92878
(951) 268-6268

City of Fontana
N/S: Sierra Avenue
E/W: I-10 Eastbound / Westbound Ramps
Weather: Clear

File Name : FONSI10AM
Site Code : 06714097
Start Date : 3/11/2014
Page No : 1

Groups Printed- Passenger Vehicles - Large 2 Axle Vehicles - 3 Axle Vehicles - 4+ Axle Trucks

| | Sierra Avenue Southbound | | | | I-10 Eastbound On/Westbound Off Ramps Westbound | | | | Sierra Avenue Northbound | | | | I-10 Westbound On/Eastbound Off Ramps Eastbound | | | | |
|---|---|---|---|---|---|---|---|---|---|---|---|---|---|---|---|---|---|
| Start Time | Left | Thru | Right | App. Total | Left | Thru | Right | App. Total | Left | Thru | Right | App. Total | Left | Thru | Right | App. Total | Int. Total |
| 07:00 AM | 115 | 209 | 194 | 518 | 214 | 0 | 89 | 303 | 88 | 118 | 104 | 310 | 143 | 0 | 49 | 192 | 1323 |
| 07:15 AM | 124 | 248 | 238 | 610 | 158 | 0 | 127 | 285 | 109 | 200 | 129 | 438 | 156 | 0 | 68 | 224 | 1557 |
| 07:30 AM | 163 | 142 | 266 | 571 | 135 | 0 | 111 | 246 | 108 | 177 | 164 | 449 | 205 | 0 | 66 | 271 | 1537 |
| 07:45 AM | 130 | 174 | 187 | 491 | 117 | 0 | 157 | 274 | 101 | 219 | 124 | 444 | 216 | 0 | 108 | 324 | 1533 |
| Total | 532 | 773 | 885 | 2190 | 624 | 0 | 484 | 1108 | 406 | 714 | 521 | 1641 | 720 | 0 | 291 | 1011 | 5950 |
| 08:00 AM | 113 | 121 | 179 | 413 | 106 | 0 | 162 | 268 | 72 | 179 | 92 | 343 | 244 | 0 | 84 | 328 | 1352 |
| 08:15 AM | 102 | 160 | 175 | 437 | 103 | 0 | 175 | 278 | 87 | 211 | 69 | 367 | 186 | 0 | 95 | 281 | 1363 |
| 08:30 AM | 96 | 134 | 173 | 403 | 100 | 0 | 136 | 236 | 73 | 131 | 86 | 290 | 201 | 0 | 70 | 271 | 1200 |
| 08:45 AM | 85 | 137 | 148 | 370 | 100 | 0 | 131 | 231 | 69 | 198 | 82 | 349 | 159 | 0 | 46 | 205 | 1155 |
| Total | 396 | 552 | 675 | 1623 | 409 | 0 | 604 | 1013 | 301 | 719 | 329 | 1349 | 790 | 0 | 295 | 1085 | 5070 |
| Grand Total | 928 | 1325 | 1560 | 3813 | 1033 | 0 | 1088 | 2121 | 707 | 1433 | 850 | 2990 | 1510 | 0 | 586 | 2096 | 11020 |
| Apprch % | 24.3 | 34.7 | 40.9 | | 48.7 | 0 | 51.3 | | 23.6 | 47.9 | 28.4 | | 72 | 0 | 28 | | |
| Total % | 8.4 | 12 | 14.2 | 34.6 | 9.4 | 0 | 9.9 | 19.2 | 6.4 | 13 | 7.7 | 27.1 | 13.7 | 0 | 5.3 | 19 | |
| Passenger Vehicles | 896 | 1307 | 1533 | 3736 | 1006 | 0 | 1069 | 2075 | 664 | 1412 | 811 | 2887 | 1486 | 0 | 540 | 2026 | 10724 |
| % Passenger Vehicles | 96.6 | 98.6 | 98.3 | 98 | 97.4 | 0 | 98.3 | 97.8 | 93.9 | 98.5 | 95.4 | 96.6 | 98.4 | 0 | 92.2 | 96.7 | 97.3 |
| Large 2 Axle Vehicles | 15 | 13 | 10 | 38 | 9 | 0 | 11 | 20 | 14 | 19 | 9 | 42 | 14 | 0 | 8 | 22 | 122 |
| % Large 2 Axle Vehicles | 1.6 | 1 | 0.6 | 1 | 0.9 | 0 | 1 | 0.9 | 2 | 1.3 | 1.1 | 1.4 | 0.9 | 0 | 1.4 | 1 | 1.1 |
| 3 Axle Vehicles | 8 | 1 | 5 | 14 | 2 | 0 | 2 | 4 | 4 | 1 | 7 | 12 | 5 | 0 | 4 | 9 | 39 |
| % 3 Axle Vehicles | 0.9 | 0.1 | 0.3 | 0.4 | 0.2 | 0 | 0.2 | 0.2 | 0.6 | 0.1 | 0.8 | 0.4 | 0.3 | 0 | 0.7 | 0.4 | 0.4 |
| 4+ Axle Trucks | 9 | 4 | 12 | 25 | 16 | 0 | 6 | 22 | 25 | 1 | 23 | 49 | 5 | 0 | 34 | 39 | 135 |
| % 4+ Axle Trucks | 1 | 0.3 | 0.8 | 0.7 | 1.5 | 0 | 0.6 | 1 | 3.5 | 0.1 | 2.7 | 1.6 | 0.3 | 0 | 5.8 | 1.9 | 1.2 |

| | Sierra Avenue Southbound | | | | I-10 Eastbound On/Westbound Off Ramps Westbound | | | | Sierra Avenue Northbound | | | | I-10 Westbound On/Eastbound Off Ramps Eastbound | | | | |
|---|---|---|---|---|---|---|---|---|---|---|---|---|---|---|---|---|---|
| Start Time | Left | Thru | Right | App. Total | Left | Thru | Right | App. Total | Left | Thru | Right | App. Total | Left | Thru | Right | App. Total | Int. Total |
| Peak Hour Analysis From 07:00 AM to 08:45 AM - Peak 1 of 1 | | | | | | | | | | | | | | | | | |
| Peak Hour for Entire Intersection Begins at 07:15 AM | | | | | | | | | | | | | | | | | |
| 07:15 AM | 124 | **248** | 238 | **610** | **158** | 0 | 127 | **285** | **109** | 200 | 129 | 438 | 156 | 0 | 68 | 224 | **1557** |
| 07:30 AM | **163** | 142 | **266** | 571 | 135 | 0 | 111 | 246 | 108 | 177 | **164** | **449** | 205 | 0 | 66 | 271 | 1537 |
| 07:45 AM | 130 | 174 | 187 | 491 | 117 | 0 | 157 | 274 | 101 | **219** | 124 | 444 | 216 | 0 | **108** | 324 | 1533 |
| 08:00 AM | 113 | 121 | 179 | 413 | 106 | 0 | **162** | 268 | 72 | 179 | 92 | 343 | **244** | 0 | 84 | **328** | 1352 |
| Total Volume | 530 | 685 | 870 | 2085 | 516 | 0 | 557 | 1073 | 390 | 775 | 509 | 1674 | 821 | 0 | 326 | 1147 | 5979 |
| % App. Total | 25.4 | 32.9 | 41.7 | | 48.1 | 0 | 51.9 | | 23.3 | 46.3 | 30.4 | | 71.6 | 0 | 28.4 | | |
| PHF | .813 | .691 | .818 | .855 | .816 | .000 | .860 | .941 | .894 | .885 | .776 | .932 | .841 | .000 | .755 | .874 | .960 |

Counts Unlimited, Inc.
PO Box 1178
Corona, CA 92878
(951) 268-6268

City of Fontana
N/S: Sierra Avenue
E/W: I-10 Eastbound / Westbound Ramps
Weather: Clear

File Name : FONSI10AM
Site Code : 06714097
Start Date : 3/11/2014
Page No : 2

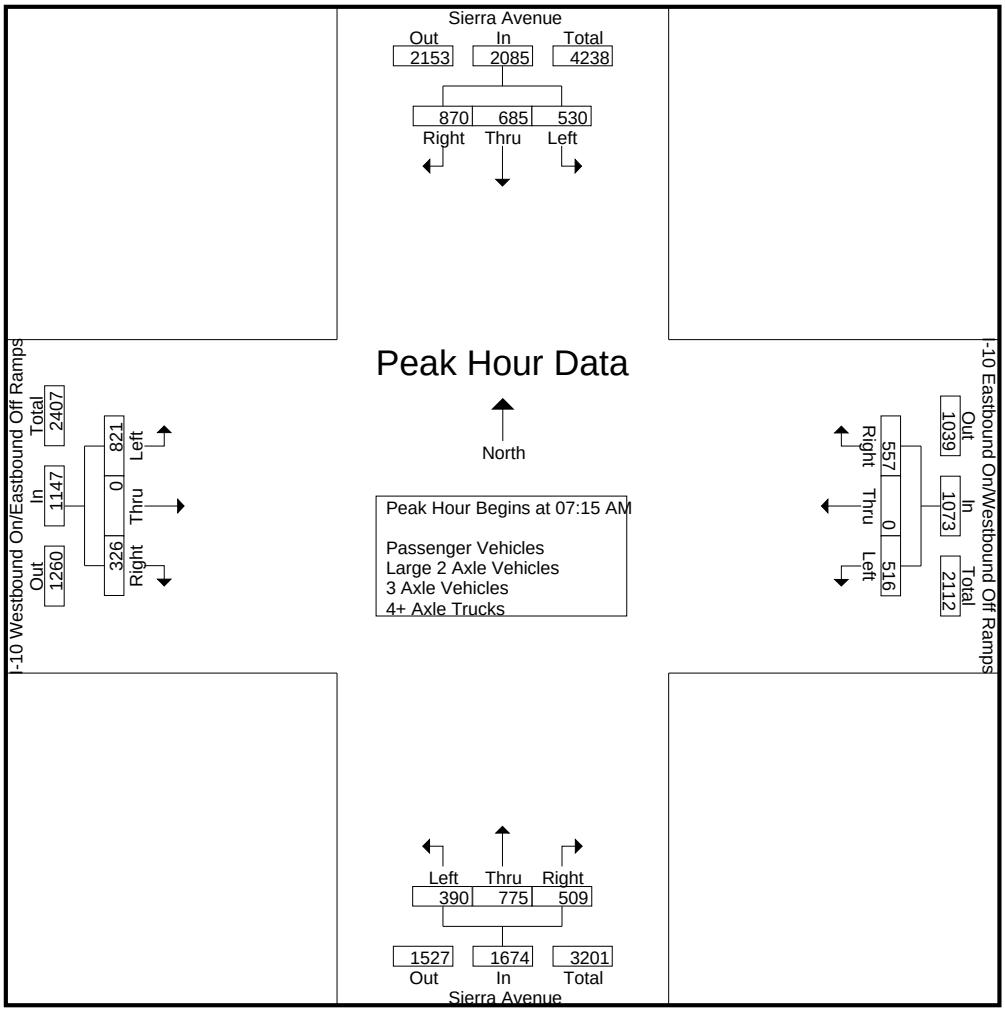


Peak Hour Analysis From 07:00 AM to 08:45 AM - Peak 1 of 1

Peak Hour for Each Approach Begins at:

| | 07:00 AM | | | | 07:00 AM | | | | 07:15 AM | | | | 07:30 AM | | | |
|---|---|---|---|---|---|---|---|---|---|---|---|---|---|---|---|---|
| +0 mins. | 115 | 209 | 194 | 518 | **214** | 0 | 89 | **303** | **109** | 200 | 129 | 438 | 205 | 0 | 66 | 271 |
| +15 mins. | 124 | **248** | 238 | **610** | 158 | 0 | 127 | 285 | 108 | 177 | **164** | **449** | 216 | 0 | **108** | 324 |
| +30 mins. | **163** | 142 | **266** | 571 | 135 | 0 | 111 | 246 | 101 | **219** | 124 | 444 | **244** | 0 | 84 | **328** |
| +45 mins. | 130 | 174 | 187 | 491 | 117 | 0 | **157** | 274 | 72 | 179 | 92 | 343 | 186 | 0 | 95 | 281 |
| Total Volume | 532 | 773 | 885 | 2190 | 624 | 0 | 484 | 1108 | 390 | 775 | 509 | 1674 | 851 | 0 | 353 | 1204 |
| % App. Total | 24.3 | 35.3 | 40.4 | | 56.3 | 0 | 43.7 | | 23.3 | 46.3 | 30.4 | | 70.7 | 0 | 29.3 | |
| PHF | .816 | .779 | .832 | .898 | .729 | .000 | .771 | .914 | .894 | .885 | .776 | .932 | .872 | .000 | .817 | .918 |

Counts Unlimited, Inc.
PO Box 1178
Corona, CA 92878
(951) 268-6268

City of Fontana
N/S: Sierra Avenue
E/W: I-10 Eastbound / Westbound Ramps
Weather: Clear

File Name : FONSI10AM
Site Code : 06714097
Start Date : 3/11/2014
Page No : 1

Groups Printed- Passenger Vehicles

| | Sierra Avenue Southbound | | | | I-10 Eastbound On/Westbound Off Ramps Westbound | | | | Sierra Avenue Northbound | | | | I-10 Westbound On/Eastbound Off Ramps Eastbound | | | | |
|---|---|---|---|---|---|---|---|---|---|---|---|---|---|---|---|---|---|
| Start Time | Left | Thru | Right | App. Total | Left | Thru | Right | App. Total | Left | Thru | Right | App. Total | Left | Thru | Right | App. Total | Int. Total |
| 07:00 AM | 108 | 206 | 191 | 505 | 211 | 0 | 88 | 299 | 86 | 116 | 99 | 301 | 139 | 0 | 47 | 186 | 1291 |
| 07:15 AM | 117 | 248 | 232 | 597 | 151 | 0 | 125 | 276 | 103 | 197 | 125 | 425 | 153 | 0 | 60 | 213 | 1511 |
| 07:30 AM | 159 | 139 | 260 | 558 | 133 | 0 | 109 | 242 | 103 | 174 | 161 | 438 | 204 | 0 | 62 | 266 | 1504 |
| 07:45 AM | 126 | 172 | 186 | 484 | 115 | 0 | 155 | 270 | 93 | 215 | 118 | 426 | 214 | 0 | 100 | 314 | 1494 |
| Total | 510 | 765 | 869 | 2144 | 610 | 0 | 477 | 1087 | 385 | 702 | 503 | 1590 | 710 | 0 | 269 | 979 | 5800 |
| 08:00 AM | 111 | 120 | 177 | 408 | 101 | 0 | 159 | 260 | 63 | 175 | 87 | 325 | 240 | 0 | 80 | 320 | 1313 |
| 08:15 AM | 101 | 155 | 172 | 428 | 100 | 0 | 172 | 272 | 82 | 209 | 65 | 356 | 181 | 0 | 85 | 266 | 1322 |
| 08:30 AM | 91 | 131 | 169 | 391 | 98 | 0 | 135 | 233 | 68 | 130 | 79 | 277 | 199 | 0 | 65 | 264 | 1165 |
| 08:45 AM | 83 | 136 | 146 | 365 | 97 | 0 | 126 | 223 | 66 | 196 | 77 | 339 | 156 | 0 | 41 | 197 | 1124 |
| Total | 386 | 542 | 664 | 1592 | 396 | 0 | 592 | 988 | 279 | 710 | 308 | 1297 | 776 | 0 | 271 | 1047 | 4924 |
| Grand Total | 896 | 1307 | 1533 | 3736 | 1006 | 0 | 1069 | 2075 | 664 | 1412 | 811 | 2887 | 1486 | 0 | 540 | 2026 | 10724 |
| Apprch % | 24 | 35 | 41 | | 48.5 | 0 | 51.5 | | 23 | 48.9 | 28.1 | | 73.3 | 0 | 26.7 | | |
| Total % | 8.4 | 12.2 | 14.3 | 34.8 | 9.4 | 0 | 10 | 19.3 | 6.2 | 13.2 | 7.6 | 26.9 | 13.9 | 0 | 5 | 18.9 | |

| | Sierra Avenue Southbound | | | | I-10 Eastbound On/Westbound Off Ramps Westbound | | | | Sierra Avenue Northbound | | | | I-10 Westbound On/Eastbound Off Ramps Eastbound | | | | |
|---|---|---|---|---|---|---|---|---|---|---|---|---|---|---|---|---|---|
| Start Time | Left | Thru | Right | App. Total | Left | Thru | Right | App. Total | Left | Thru | Right | App. Total | Left | Thru | Right | App. Total | Int. Total |
| Peak Hour Analysis From 07:15 AM to 08:00 AM - Peak 1 of 1 | | | | | | | | | | | | | | | | | |
| Peak Hour for Entire Intersection Begins at 07:15 AM | | | | | | | | | | | | | | | | | |
| 07:15 AM | 117 | **248** | 232 | **597** | **151** | 0 | 125 | **276** | **103** | 197 | 125 | 425 | 153 | 0 | 60 | 213 | **1511** |
| 07:30 AM | **159** | 139 | **260** | 558 | 133 | 0 | 109 | 242 | 103 | 174 | **161** | **438** | 204 | 0 | 62 | 266 | 1504 |
| 07:45 AM | 126 | 172 | 186 | 484 | 115 | 0 | 155 | 270 | 93 | **215** | 118 | 426 | 214 | 0 | **100** | 314 | 1494 |
| 08:00 AM | 111 | 120 | 177 | 408 | 101 | 0 | **159** | 260 | 63 | 175 | 87 | 325 | **240** | 0 | 80 | **320** | 1313 |
| Total Volume | 513 | 679 | 855 | 2047 | 500 | 0 | 548 | 1048 | 362 | 761 | 491 | 1614 | 811 | 0 | 302 | 1113 | 5822 |
| % App. Total | 25.1 | 33.2 | 41.8 | | 47.7 | 0 | 52.3 | | 22.4 | 47.1 | 30.4 | | 72.9 | 0 | 27.1 | | |
| PHF | .807 | .684 | .822 | .857 | .828 | .000 | .862 | .949 | .879 | .885 | .762 | .921 | .845 | .000 | .755 | .870 | .963 |

Counts Unlimited, Inc.
PO Box 1178
Corona, CA 92878
(951) 268-6268

City of Fontana
N/S: Sierra Avenue
E/W: I-10 Eastbound / Westbound Ramps
Weather: Clear

File Name : FONSI10AM
Site Code : 06714097
Start Date : 3/11/2014
Page No : 2

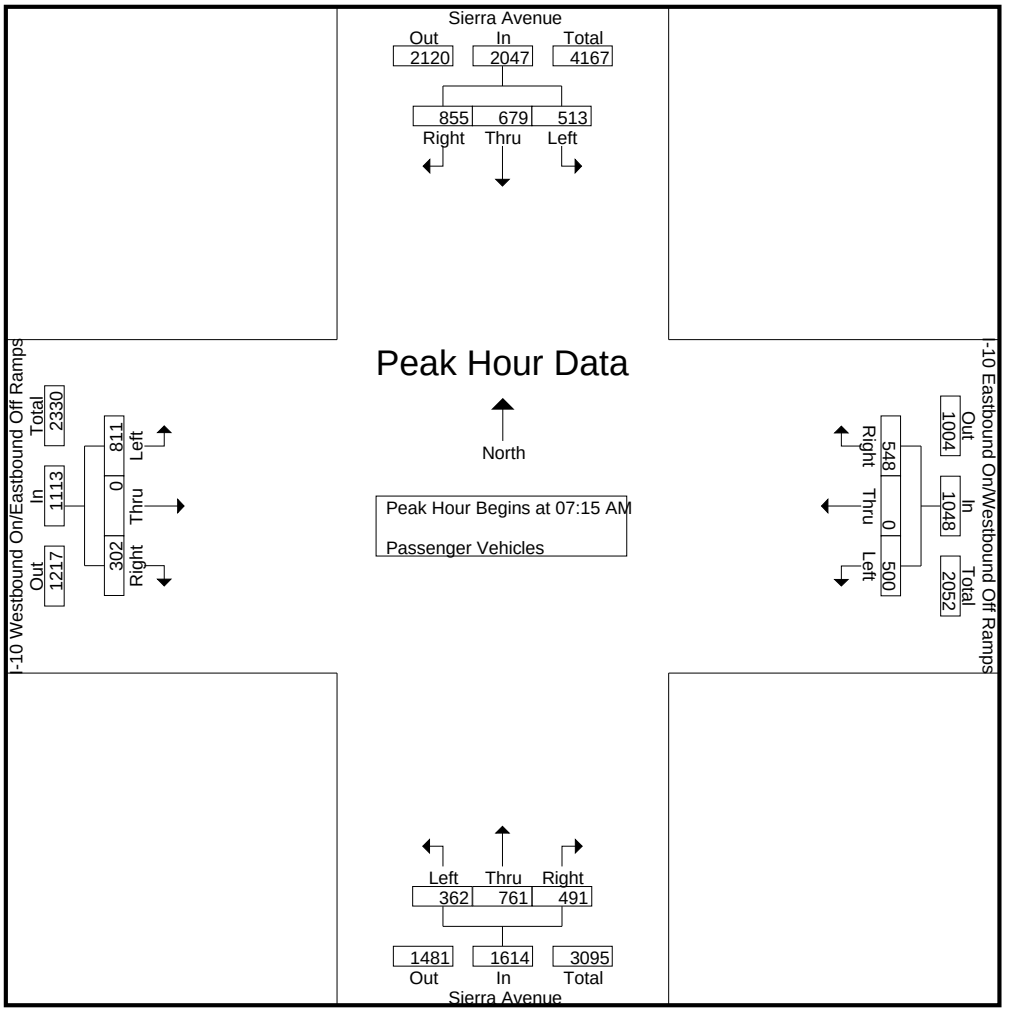


Peak Hour Analysis From 07:15 AM to 08:00 AM - Peak 1 of 1

Peak Hour for Each Approach Begins at:

| | 07:15 AM | | | | 07:15 AM | | | | 07:15 AM | | | | 07:15 AM | | | |
|---|---|---|---|---|---|---|---|---|---|---|---|---|---|---|---|---|
| +0 mins. | 117 | **248** | 232 | **597** | **151** | 0 | 125 | **276** | **103** | 197 | 125 | 425 | 153 | 0 | 60 | 213 |
| +15 mins. | **159** | 139 | **260** | 558 | 133 | 0 | 109 | 242 | 103 | 174 | **161** | **438** | 204 | 0 | 62 | 266 |
| +30 mins. | 126 | 172 | 186 | 484 | 115 | 0 | 155 | 270 | 93 | **215** | 118 | 426 | 214 | 0 | **100** | 314 |
| +45 mins. | 111 | 120 | 177 | 408 | 101 | 0 | **159** | 260 | 63 | 175 | 87 | 325 | **240** | 0 | 80 | **320** |
| Total Volume | 513 | 679 | 855 | 2047 | 500 | 0 | 548 | 1048 | 362 | 761 | 491 | 1614 | 811 | 0 | 302 | 1113 |
| % App. Total | 25.1 | 33.2 | 41.8 | | 47.7 | 0 | 52.3 | | 22.4 | 47.1 | 30.4 | | 72.9 | 0 | 27.1 | |
| PHF | .807 | .684 | .822 | .857 | .828 | .000 | .862 | .949 | .879 | .885 | .762 | .921 | .845 | .000 | .755 | .870 |

Counts Unlimited, Inc.
PO Box 1178
Corona, CA 92878
(951) 268-6268

City of Fontana
N/S: Sierra Avenue
E/W: I-10 Eastbound / Westbound Ramps
Weather: Clear

File Name : FONSI10AM
Site Code : 06714097
Start Date : 3/11/2014
Page No : 1

Groups Printed- Large 2 Axle Vehicles

| | Sierra Avenue Southbound | | | | I-10 Eastbound On/Westbound Off Ramps Westbound | | | | Sierra Avenue Northbound | | | | I-10 Westbound On/Eastbound Off Ramps Eastbound | | | | |
|---|---|---|---|---|---|---|---|---|---|---|---|---|---|---|---|---|---|
| Start Time | Left | Thru | Right | App. Total | Left | Thru | Right | App. Total | Left | Thru | Right | App. Total | Left | Thru | Right | App. Total | Int. Total |
| 07:00 AM | 1 | 2 | 2 | 5 | 1 | 0 | 1 | 2 | 0 | 2 | 0 | 2 | 0 | 0 | 0 | 0 | 9 |
| 07:15 AM | 4 | 0 | 0 | 4 | 2 | 0 | 2 | 4 | 2 | 3 | 0 | 5 | 2 | 0 | 3 | 5 | 18 |
| 07:30 AM | 3 | 2 | 1 | 6 | 1 | 0 | 1 | 2 | 2 | 2 | 0 | 4 | 1 | 0 | 0 | 1 | 13 |
| 07:45 AM | 2 | 1 | 0 | 3 | 1 | 0 | 1 | 2 | 4 | 4 | 3 | 11 | 0 | 0 | 0 | 0 | 16 |
| Total | 10 | 5 | 3 | 18 | 5 | 0 | 5 | 10 | 8 | 11 | 3 | 22 | 3 | 0 | 3 | 6 | 56 |
| 08:00 AM | 1 | 1 | 1 | 3 | 1 | 0 | 3 | 4 | 3 | 3 | 2 | 8 | 1 | 0 | 0 | 1 | 16 |
| 08:15 AM | 1 | 3 | 1 | 5 | 2 | 0 | 1 | 3 | 2 | 2 | 2 | 6 | 5 | 0 | 3 | 8 | 22 |
| 08:30 AM | 2 | 3 | 3 | 8 | 1 | 0 | 1 | 2 | 1 | 1 | 1 | 3 | 2 | 0 | 0 | 2 | 15 |
| 08:45 AM | 1 | 1 | 2 | 4 | 0 | 0 | 1 | 1 | 0 | 2 | 1 | 3 | 3 | 0 | 2 | 5 | 13 |
| Total | 5 | 8 | 7 | 20 | 4 | 0 | 6 | 10 | 6 | 8 | 6 | 20 | 11 | 0 | 5 | 16 | 66 |
| Grand Total | 15 | 13 | 10 | 38 | 9 | 0 | 11 | 20 | 14 | 19 | 9 | 42 | 14 | 0 | 8 | 22 | 122 |
| Apprch % | 39.5 | 34.2 | 26.3 | | 45 | 0 | 55 | | 33.3 | 45.2 | 21.4 | | 63.6 | 0 | 36.4 | | |
| Total % | 12.3 | 10.7 | 8.2 | 31.1 | 7.4 | 0 | 9 | 16.4 | 11.5 | 15.6 | 7.4 | 34.4 | 11.5 | 0 | 6.6 | 18 | |

| | Sierra Avenue Southbound | | | | I-10 Eastbound On/Westbound Off Ramps Westbound | | | | Sierra Avenue Northbound | | | | I-10 Westbound On/Eastbound Off Ramps Eastbound | | | | |
|---|---|---|---|---|---|---|---|---|---|---|---|---|---|---|---|---|---|
| Start Time | Left | Thru | Right | App. Total | Left | Thru | Right | App. Total | Left | Thru | Right | App. Total | Left | Thru | Right | App. Total | Int. Total |
| Peak Hour Analysis From 07:15 AM to 08:00 AM - Peak 1 of 1 | | | | | | | | | | | | | | | | | |
| Peak Hour for Entire Intersection Begins at 07:15 AM | | | | | | | | | | | | | | | | | |
| 07:15 AM | **4** | 0 | 0 | 4 | **2** | 0 | 2 | **4** | 2 | 3 | 0 | 5 | **2** | 0 | **3** | **5** | **18** |
| 07:30 AM | 3 | **2** | **1** | **6** | 1 | 0 | 1 | 2 | 2 | 2 | 0 | 4 | 1 | 0 | 0 | 1 | 13 |
| 07:45 AM | 2 | 1 | 0 | 3 | 1 | 0 | 1 | 2 | **4** | **4** | **3** | **11** | 0 | 0 | 0 | 0 | 16 |
| 08:00 AM | 1 | 1 | 1 | 3 | 1 | 0 | **3** | 4 | 3 | 3 | 2 | 8 | 1 | 0 | 0 | 1 | 16 |
| Total Volume | 10 | 4 | 2 | 16 | 5 | 0 | 7 | 12 | 11 | 12 | 5 | 28 | 4 | 0 | 3 | 7 | 63 |
| % App. Total | 62.5 | 25 | 12.5 | | 41.7 | 0 | 58.3 | | 39.3 | 42.9 | 17.9 | | 57.1 | 0 | 42.9 | | |
| PHF | .625 | .500 | .500 | .667 | .625 | .000 | .583 | .750 | .688 | .750 | .417 | .636 | .500 | .000 | .250 | .350 | .875 |

Counts Unlimited, Inc.
PO Box 1178
Corona, CA 92878
(951) 268-6268

City of Fontana
N/S: Sierra Avenue
E/W: I-10 Eastbound / Westbound Ramps
Weather: Clear

File Name : FONSI10AM
Site Code : 06714097
Start Date : 3/11/2014
Page No : 2

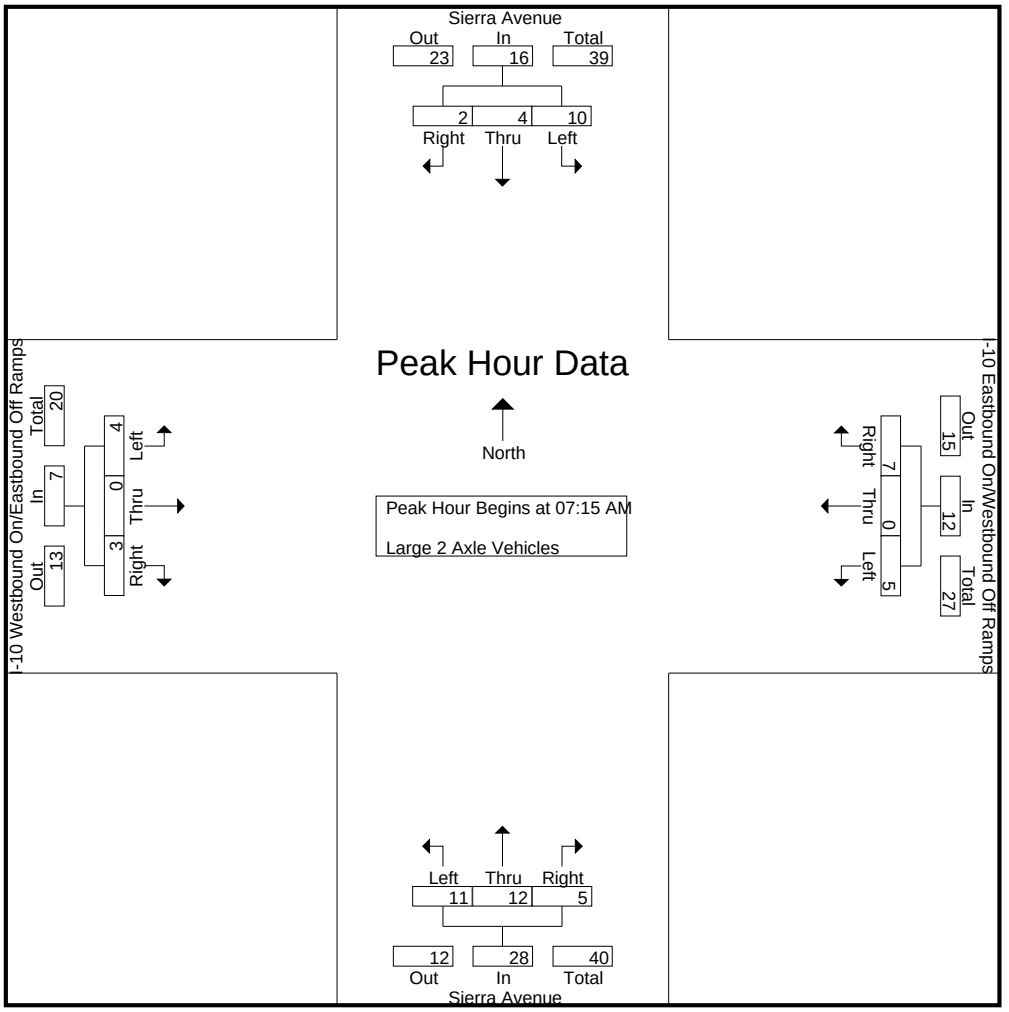


Peak Hour Analysis From 07:15 AM to 08:00 AM - Peak 1 of 1

Peak Hour for Each Approach Begins at:

| | 07:15 AM | | | | 07:15 AM | | | | 07:15 AM | | | | 07:15 AM | | | |
|---|---|---|---|---|---|---|---|---|---|---|---|---|---|---|---|---|
| +0 mins. | **4** | 0 | 0 | 4 | **2** | 0 | 2 | **4** | 2 | 3 | 0 | 5 | **2** | 0 | **3** | **5** |
| +15 mins. | 3 | **2** | **1** | **6** | 1 | 0 | 1 | 2 | 2 | 2 | 0 | 4 | 1 | 0 | 0 | 1 |
| +30 mins. | 2 | 1 | 0 | 3 | 1 | 0 | 1 | 2 | **4** | **4** | **3** | **11** | 0 | 0 | 0 | 0 |
| +45 mins. | 1 | 1 | 1 | 3 | 1 | 0 | **3** | 4 | 3 | 3 | 2 | 8 | 1 | 0 | 0 | 1 |
| Total Volume | 10 | 4 | 2 | 16 | 5 | 0 | 7 | 12 | 11 | 12 | 5 | 28 | 4 | 0 | 3 | 7 |
| % App. Total | 62.5 | 25 | 12.5 | | 41.7 | 0 | 58.3 | | 39.3 | 42.9 | 17.9 | | 57.1 | 0 | 42.9 | |
| PHF | .625 | .500 | .500 | .667 | .625 | .000 | .583 | .750 | .688 | .750 | .417 | .636 | .500 | .000 | .250 | .350 |

Counts Unlimited, Inc.
PO Box 1178
Corona, CA 92878
(951) 268-6268

City of Fontana
N/S: Sierra Avenue
E/W: I-10 Eastbound / Westbound Ramps
Weather: Clear

File Name : FONSI10AM
Site Code : 06714097
Start Date : 3/11/2014
Page No : 1

Groups Printed- 3 Axle Vehicles

| | Sierra Avenue Southbound | | | | I-10 Eastbound On/Westbound Off Ramps Westbound | | | | Sierra Avenue Northbound | | | | I-10 Westbound On/Eastbound Off Ramps Eastbound | | | | |
|---|---|---|---|---|---|---|---|---|---|---|---|---|---|---|---|---|---|
| Start Time | Left | Thru | Right | App. Total | Left | Thru | Right | App. Total | Left | Thru | Right | App. Total | Left | Thru | Right | App. Total | Int. Total |
| 07:00 AM | 2 | 1 | 0 | 3 | 1 | 0 | 0 | 1 | 0 | 0 | 0 | 0 | 2 | 0 | 1 | 3 | 7 |
| 07:15 AM | 2 | 0 | 2 | 4 | 0 | 0 | 0 | 0 | 0 | 0 | 1 | 1 | 0 | 0 | 0 | 0 | 5 |
| 07:30 AM | 0 | 0 | 2 | 2 | 0 | 0 | 0 | 0 | 2 | 1 | 0 | 3 | 0 | 0 | 0 | 0 | 5 |
| 07:45 AM | 1 | 0 | 0 | 1 | 0 | 0 | 0 | 0 | 1 | 0 | 1 | 2 | 1 | 0 | 0 | 1 | 4 |
| Total | 5 | 1 | 4 | 10 | 1 | 0 | 0 | 1 | 3 | 1 | 2 | 6 | 3 | 0 | 1 | 4 | 21 |
| 08:00 AM | 1 | 0 | 1 | 2 | 1 | 0 | 0 | 1 | 0 | 0 | 2 | 2 | 2 | 0 | 2 | 4 | 9 |
| 08:15 AM | 0 | 0 | 0 | 0 | 0 | 0 | 1 | 1 | 0 | 0 | 0 | 0 | 0 | 0 | 0 | 0 | 1 |
| 08:30 AM | 2 | 0 | 0 | 2 | 0 | 0 | 0 | 0 | 1 | 0 | 3 | 4 | 0 | 0 | 1 | 1 | 7 |
| 08:45 AM | 0 | 0 | 0 | 0 | 0 | 0 | 1 | 1 | 0 | 0 | 0 | 0 | 0 | 0 | 0 | 0 | 1 |
| Total | 3 | 0 | 1 | 4 | 1 | 0 | 2 | 3 | 1 | 0 | 5 | 6 | 2 | 0 | 3 | 5 | 18 |
| Grand Total | 8 | 1 | 5 | 14 | 2 | 0 | 2 | 4 | 4 | 1 | 7 | 12 | 5 | 0 | 4 | 9 | 39 |
| Apprch % | 57.1 | 7.1 | 35.7 | | 50 | 0 | 50 | | 33.3 | 8.3 | 58.3 | | 55.6 | 0 | 44.4 | | |
| Total % | 20.5 | 2.6 | 12.8 | 35.9 | 5.1 | 0 | 5.1 | 10.3 | 10.3 | 2.6 | 17.9 | 30.8 | 12.8 | 0 | 10.3 | 23.1 | |

| | Sierra Avenue Southbound | | | | I-10 Eastbound On/Westbound Off Ramps Westbound | | | | Sierra Avenue Northbound | | | | I-10 Westbound On/Eastbound Off Ramps Eastbound | | | | |
|---|---|---|---|---|---|---|---|---|---|---|---|---|---|---|---|---|---|
| Start Time | Left | Thru | Right | App. Total | Left | Thru | Right | App. Total | Left | Thru | Right | App. Total | Left | Thru | Right | App. Total | Int. Total |
| Peak Hour Analysis From 07:15 AM to 08:00 AM - Peak 1 of 1 | | | | | | | | | | | | | | | | | |
| Peak Hour for Entire Intersection Begins at 07:15 AM | | | | | | | | | | | | | | | | | |
| 07:15 AM | **2** | 0 | **2** | **4** | 0 | 0 | 0 | 0 | 0 | 0 | 1 | 1 | 0 | 0 | 0 | 0 | 5 |
| 07:30 AM | 0 | 0 | 2 | 2 | 0 | 0 | 0 | 0 | **2** | **1** | 0 | **3** | 0 | 0 | 0 | 0 | 5 |
| 07:45 AM | 1 | 0 | 0 | 1 | 0 | 0 | 0 | 0 | 1 | 0 | 1 | 2 | 1 | 0 | 0 | 1 | 4 |
| 08:00 AM | 1 | 0 | 1 | 2 | **1** | 0 | 0 | **1** | 0 | 0 | **2** | 2 | **2** | 0 | **2** | **4** | **9** |
| Total Volume | 4 | 0 | 5 | 9 | 1 | 0 | 0 | 1 | 3 | 1 | 4 | 8 | 3 | 0 | 2 | 5 | 23 |
| % App. Total | 44.4 | 0 | 55.6 | | 100 | 0 | 0 | | 37.5 | 12.5 | 50 | | 60 | 0 | 40 | | |
| PHF | .500 | .000 | .625 | .563 | .250 | .000 | .000 | .250 | .375 | .250 | .500 | .667 | .375 | .000 | .250 | .313 | .639 |

Counts Unlimited, Inc.
PO Box 1178
Corona, CA 92878
(951) 268-6268

City of Fontana
N/S: Sierra Avenue
E/W: I-10 Eastbound / Westbound Ramps
Weather: Clear

File Name : FONSI10AM
Site Code : 06714097
Start Date : 3/11/2014
Page No : 2

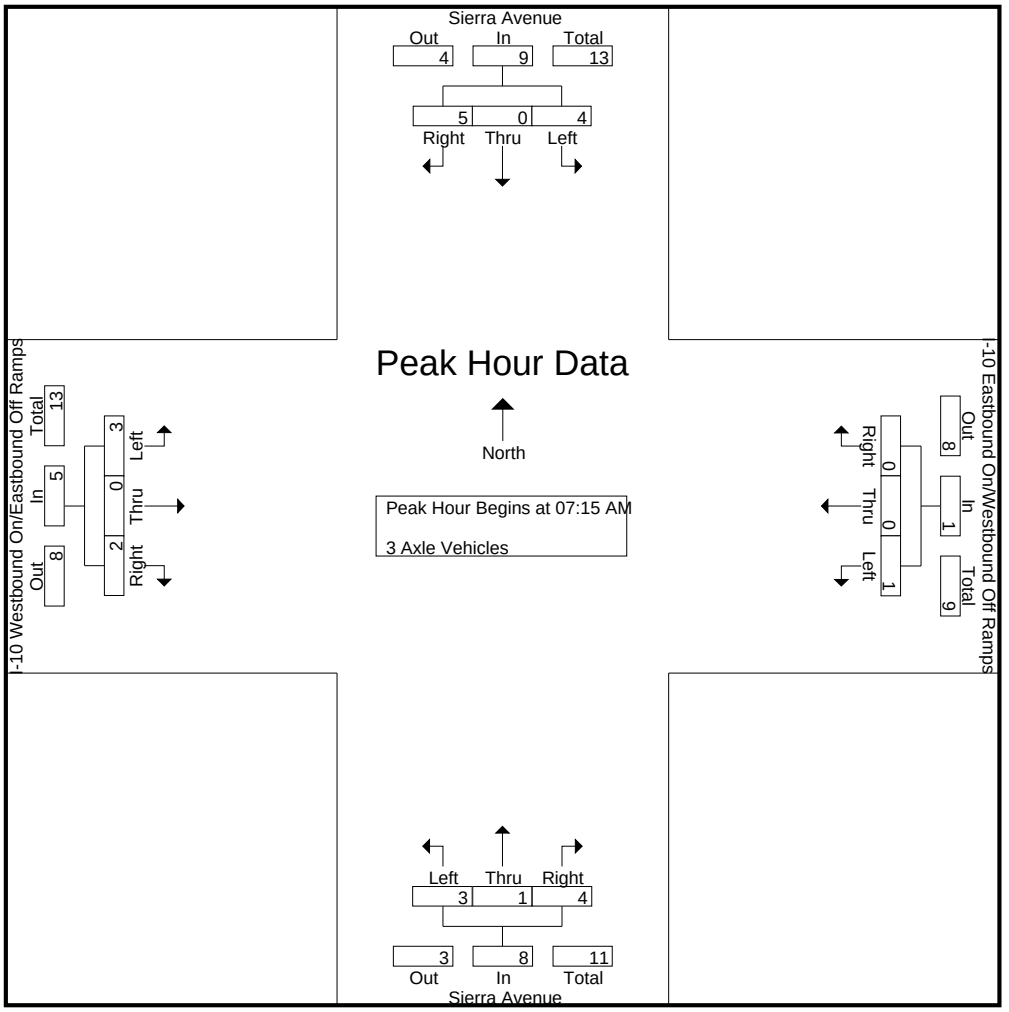


Peak Hour Analysis From 07:15 AM to 08:00 AM - Peak 1 of 1

Peak Hour for Each Approach Begins at:

| | 07:15 AM | | | | 07:15 AM | | | | 07:15 AM | | | | 07:15 AM | | | |
|---|---|---|---|---|---|---|---|---|---|---|---|---|---|---|---|---|
| +0 mins. | **2** | 0 | **2** | **4** | 0 | 0 | 0 | 0 | 0 | 0 | 1 | 1 | 0 | 0 | 0 | 0 |
| +15 mins. | 0 | 0 | 2 | 2 | 0 | 0 | 0 | 0 | **2** | **1** | 0 | **3** | 0 | 0 | 0 | 0 |
| +30 mins. | 1 | 0 | 0 | 1 | 0 | 0 | 0 | 0 | 1 | 0 | 1 | 2 | 1 | 0 | 0 | 1 |
| +45 mins. | 1 | 0 | 1 | 2 | **1** | 0 | 0 | **1** | 0 | 0 | **2** | 2 | **2** | 0 | **2** | **4** |
| Total Volume | 4 | 0 | 5 | 9 | 1 | 0 | 0 | 1 | 3 | 1 | 4 | 8 | 3 | 0 | 2 | 5 |
| % App. Total | 44.4 | 0 | 55.6 | | 100 | 0 | 0 | | 37.5 | 12.5 | 50 | | 60 | 0 | 40 | |
| PHF | .500 | .000 | .625 | .563 | .250 | .000 | .000 | .250 | .375 | .250 | .500 | .667 | .375 | .000 | .250 | .313 |

Counts Unlimited, Inc.
PO Box 1178
Corona, CA 92878
(951) 268-6268

City of Fontana
N/S: Sierra Avenue
E/W: I-10 Eastbound / Westbound Ramps
Weather: Clear

File Name : FONSI10AM
Site Code : 06714097
Start Date : 3/11/2014
Page No : 1

Groups Printed- 4+ Axle Trucks

| | Sierra Avenue Southbound | | | | I-10 Eastbound On/Westbound Off Ramps Westbound | | | | Sierra Avenue Northbound | | | | I-10 Westbound On/Eastbound Off Ramps Eastbound | | | | |
|---|---|---|---|---|---|---|---|---|---|---|---|---|---|---|---|---|---|
| Start Time | Left | Thru | Right | App. Total | Left | Thru | Right | App. Total | Left | Thru | Right | App. Total | Left | Thru | Right | App. Total | Int. Total |
| 07:00 AM | 4 | 0 | 1 | 5 | 1 | 0 | 0 | 1 | 2 | 0 | 5 | 7 | 2 | 0 | 1 | 3 | 16 |
| 07:15 AM | 1 | 0 | 4 | 5 | 5 | 0 | 0 | 5 | 4 | 0 | 3 | 7 | 1 | 0 | 5 | 6 | 23 |
| 07:30 AM | 1 | 1 | 3 | 5 | 1 | 0 | 1 | 2 | 1 | 0 | 3 | 4 | 0 | 0 | 4 | 4 | 15 |
| 07:45 AM | 1 | 1 | 1 | 3 | 1 | 0 | 1 | 2 | 3 | 0 | 2 | 5 | 1 | 0 | 8 | 9 | 19 |
| Total | 7 | 2 | 9 | 18 | 8 | 0 | 2 | 10 | 10 | 0 | 13 | 23 | 4 | 0 | 18 | 22 | 73 |
| 08:00 AM | 0 | 0 | 0 | 0 | 3 | 0 | 0 | 3 | 6 | 1 | 1 | 8 | 1 | 0 | 2 | 3 | 14 |
| 08:15 AM | 0 | 2 | 2 | 4 | 1 | 0 | 1 | 2 | 3 | 0 | 2 | 5 | 0 | 0 | 7 | 7 | 18 |
| 08:30 AM | 1 | 0 | 1 | 2 | 1 | 0 | 0 | 1 | 3 | 0 | 3 | 6 | 0 | 0 | 4 | 4 | 13 |
| 08:45 AM | 1 | 0 | 0 | 1 | 3 | 0 | 3 | 6 | 3 | 0 | 4 | 7 | 0 | 0 | 3 | 3 | 17 |
| Total | 2 | 2 | 3 | 7 | 8 | 0 | 4 | 12 | 15 | 1 | 10 | 26 | 1 | 0 | 16 | 17 | 62 |
| Grand Total | 9 | 4 | 12 | 25 | 16 | 0 | 6 | 22 | 25 | 1 | 23 | 49 | 5 | 0 | 34 | 39 | 135 |
| Apprch % | 36 | 16 | 48 | | 72.7 | 0 | 27.3 | | 51 | 2 | 46.9 | | 12.8 | 0 | 87.2 | | |
| Total % | 6.7 | 3 | 8.9 | 18.5 | 11.9 | 0 | 4.4 | 16.3 | 18.5 | 0.7 | 17 | 36.3 | 3.7 | 0 | 25.2 | 28.9 | |

| | Sierra Avenue Southbound | | | | I-10 Eastbound On/Westbound Off Ramps Westbound | | | | Sierra Avenue Northbound | | | | I-10 Westbound On/Eastbound Off Ramps Eastbound | | | | |
|---|---|---|---|---|---|---|---|---|---|---|---|---|---|---|---|---|---|
| Start Time | Left | Thru | Right | App. Total | Left | Thru | Right | App. Total | Left | Thru | Right | App. Total | Left | Thru | Right | App. Total | Int. Total |
| Peak Hour Analysis From 07:15 AM to 08:00 AM - Peak 1 of 1 | | | | | | | | | | | | | | | | | |
| Peak Hour for Entire Intersection Begins at 07:15 AM | | | | | | | | | | | | | | | | | |
| 07:15 AM | **1** | 0 | **4** | **5** | **5** | 0 | 0 | **5** | 4 | 0 | **3** | 7 | **1** | 0 | 5 | 6 | **23** |
| 07:30 AM | 1 | **1** | 3 | 5 | 1 | 0 | **1** | 2 | 1 | 0 | 3 | 4 | 0 | 0 | 4 | 4 | 15 |
| 07:45 AM | 1 | 1 | 1 | 3 | 1 | 0 | 1 | 2 | 3 | 0 | 2 | 5 | 1 | 0 | **8** | **9** | 19 |
| 08:00 AM | 0 | 0 | 0 | 0 | 3 | 0 | 0 | 3 | **6** | **1** | 1 | **8** | 1 | 0 | 2 | 3 | 14 |
| Total Volume | 3 | 2 | 8 | 13 | 10 | 0 | 2 | 12 | 14 | 1 | 9 | 24 | 3 | 0 | 19 | 22 | 71 |
| % App. Total | 23.1 | 15.4 | 61.5 | | 83.3 | 0 | 16.7 | | 58.3 | 4.2 | 37.5 | | 13.6 | 0 | 86.4 | | |
| PHF | .750 | .500 | .500 | .650 | .500 | .000 | .500 | .600 | .583 | .250 | .750 | .750 | .750 | .000 | .594 | .611 | .772 |

Counts Unlimited, Inc.
PO Box 1178
Corona, CA 92878
(951) 268-6268

City of Fontana
N/S: Sierra Avenue
E/W: I-10 Eastbound / Westbound Ramps
Weather: Clear

File Name : FONSI10AM
Site Code : 06714097
Start Date : 3/11/2014
Page No : 2

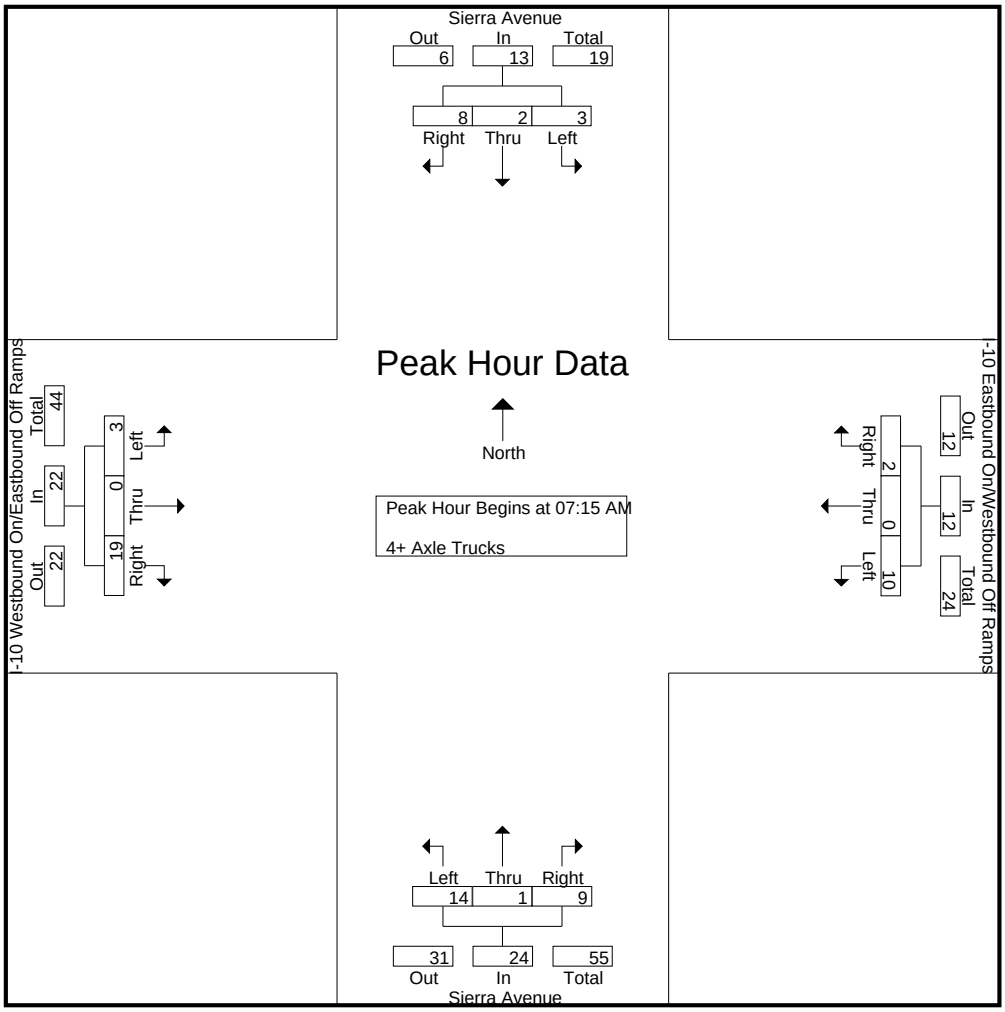


Peak Hour Analysis From 07:15 AM to 08:00 AM - Peak 1 of 1

Peak Hour for Each Approach Begins at:

| | 07:15 AM | | | | 07:15 AM | | | | 07:15 AM | | | | 07:15 AM | | | |
|---|---|---|---|---|---|---|---|---|---|---|---|---|---|---|---|---|
| +0 mins. | **1** | 0 | **4** | **5** | **5** | 0 | 0 | **5** | 4 | 0 | **3** | 7 | **1** | 0 | 5 | 6 |
| +15 mins. | 1 | **1** | 3 | 5 | 1 | 0 | **1** | 2 | 1 | 0 | 3 | 4 | 0 | 0 | 4 | 4 |
| +30 mins. | 1 | 1 | 1 | 3 | 1 | 0 | 1 | 2 | 3 | 0 | 2 | 5 | 1 | 0 | **8** | **9** |
| +45 mins. | 0 | 0 | 0 | 0 | 3 | 0 | 0 | 3 | **6** | **1** | 1 | **8** | 1 | 0 | 2 | 3 |
| Total Volume | 3 | 2 | 8 | 13 | 10 | 0 | 2 | 12 | 14 | 1 | 9 | 24 | 3 | 0 | 19 | 22 |
| % App. Total | 23.1 | 15.4 | 61.5 | | 83.3 | 0 | 16.7 | | 58.3 | 4.2 | 37.5 | | 13.6 | 0 | 86.4 | |
| PHF | .750 | .500 | .500 | .650 | .500 | .000 | .500 | .600 | .583 | .250 | .750 | .750 | .750 | .000 | .594 | .611 |

Counts Unlimited, Inc.
PO Box 1178
Corona, CA 92878
(951) 268-6268

City of Fontana
N/S: Sierra Avenue
E/W: I-10 Eastbound / Westbound Ramps
Weather: Clear

File Name : FONSI10PM
Site Code : 06714097
Start Date : 3/11/2014
Page No : 1

Groups Printed- Passenger Vehicles - Large 2 Axle Vehicles - 3 Axle Vehicles - 4+ Axle Trucks

| | Sierra Avenue Southbound | | | | I-10 Eastbound On/Westbound Off Ramps Westbound | | | | Sierra Avenue Northbound | | | | I-10 Westbound On/Eastbound Off Ramps Eastbound | | | | |
|---|---|---|---|---|---|---|---|---|---|---|---|---|---|---|---|---|---|
| Start Time | Left | Thru | Right | App. Total | Left | Thru | Right | App. Total | Left | Thru | Right | App. Total | Left | Thru | Right | App. Total | Int. Total |
| 04:00 PM | 156 | 216 | 200 | 572 | 96 | 0 | 126 | 222 | 103 | 258 | 141 | 502 | 180 | 0 | 122 | 302 | 1598 |
| 04:15 PM | 169 | 235 | 207 | 611 | 97 | 0 | 149 | 246 | 73 | 266 | 162 | 501 | 203 | 0 | 141 | 344 | 1702 |
| 04:30 PM | 155 | 261 | 218 | 634 | 129 | 0 | 127 | 256 | 92 | 260 | 164 | 516 | 194 | 0 | 119 | 313 | 1719 |
| 04:45 PM | 151 | 285 | 236 | 672 | 111 | 0 | 142 | 253 | 107 | 313 | 155 | 575 | 165 | 0 | 88 | 253 | 1753 |
| Total | 631 | 997 | 861 | 2489 | 433 | 0 | 544 | 977 | 375 | 1097 | 622 | 2094 | 742 | 0 | 470 | 1212 | 6772 |
| 05:00 PM | 161 | 241 | 217 | 619 | 123 | 0 | 126 | 249 | 97 | 239 | 172 | 508 | 205 | 0 | 124 | 329 | 1705 |
| 05:15 PM | 136 | 270 | 210 | 616 | 98 | 0 | 141 | 239 | 112 | 306 | 142 | 560 | 165 | 0 | 114 | 279 | 1694 |
| 05:30 PM | 120 | 250 | 186 | 556 | 70 | 0 | 60 | 130 | 75 | 254 | 115 | 444 | 252 | 0 | 112 | 364 | 1494 |
| 05:45 PM | 130 | 258 | 174 | 562 | 88 | 0 | 108 | 196 | 93 | 282 | 109 | 484 | 220 | 0 | 121 | 341 | 1583 |
| Total | 547 | 1019 | 787 | 2353 | 379 | 0 | 435 | 814 | 377 | 1081 | 538 | 1996 | 842 | 0 | 471 | 1313 | 6476 |
| Grand Total | 1178 | 2016 | 1648 | 4842 | 812 | 0 | 979 | 1791 | 752 | 2178 | 1160 | 4090 | 1584 | 0 | 941 | 2525 | 13248 |
| Apprch % | 24.3 | 41.6 | 34 | | 45.3 | 0 | 54.7 | | 18.4 | 53.3 | 28.4 | | 62.7 | 0 | 37.3 | | |
| Total % | 8.9 | 15.2 | 12.4 | 36.5 | 6.1 | 0 | 7.4 | 13.5 | 5.7 | 16.4 | 8.8 | 30.9 | 12 | 0 | 7.1 | 19.1 | |
| Passenger Vehicles | 1143 | 2008 | 1625 | 4776 | 789 | 0 | 956 | 1745 | 722 | 2160 | 1115 | 3997 | 1563 | 0 | 915 | 2478 | 12996 |
| % Passenger Vehicles | 97 | 99.6 | 98.6 | 98.6 | 97.2 | 0 | 97.7 | 97.4 | 96 | 99.2 | 96.1 | 97.7 | 98.7 | 0 | 97.2 | 98.1 | 98.1 |
| Large 2 Axle Vehicles | 7 | 6 | 12 | 25 | 8 | 0 | 9 | 17 | 8 | 13 | 9 | 30 | 11 | 0 | 7 | 18 | 90 |
| % Large 2 Axle Vehicles | 0.6 | 0.3 | 0.7 | 0.5 | 1 | 0 | 0.9 | 0.9 | 1.1 | 0.6 | 0.8 | 0.7 | 0.7 | 0 | 0.7 | 0.7 | 0.7 |
| 3 Axle Vehicles | 12 | 1 | 5 | 18 | 4 | 0 | 5 | 9 | 6 | 3 | 5 | 14 | 0 | 0 | 6 | 6 | 47 |
| % 3 Axle Vehicles | 1 | 0 | 0.3 | 0.4 | 0.5 | 0 | 0.5 | 0.5 | 0.8 | 0.1 | 0.4 | 0.3 | 0 | 0 | 0.6 | 0.2 | 0.4 |
| 4+ Axle Trucks | 16 | 1 | 6 | 23 | 11 | 0 | 9 | 20 | 16 | 2 | 31 | 49 | 10 | 0 | 13 | 23 | 115 |
| % 4+ Axle Trucks | 1.4 | 0 | 0.4 | 0.5 | 1.4 | 0 | 0.9 | 1.1 | 2.1 | 0.1 | 2.7 | 1.2 | 0.6 | 0 | 1.4 | 0.9 | 0.9 |

| | Sierra Avenue Southbound | | | | I-10 Eastbound On/Westbound Off Ramps Westbound | | | | Sierra Avenue Northbound | | | | I-10 Westbound On/Eastbound Off Ramps Eastbound | | | | |
|---|---|---|---|---|---|---|---|---|---|---|---|---|---|---|---|---|---|
| Start Time | Left | Thru | Right | App. Total | Left | Thru | Right | App. Total | Left | Thru | Right | App. Total | Left | Thru | Right | App. Total | Int. Total |
| Peak Hour Analysis From 04:00 PM to 05:45 PM - Peak 1 of 1 | | | | | | | | | | | | | | | | | |
| Peak Hour for Entire Intersection Begins at 04:15 PM | | | | | | | | | | | | | | | | | |
| 04:15 PM | **169** | 235 | 207 | 611 | 97 | 0 | **149** | 246 | 73 | 266 | 162 | 501 | 203 | 0 | **141** | **344** | 1702 |
| 04:30 PM | 155 | 261 | 218 | 634 | **129** | 0 | 127 | **256** | 92 | 260 | 164 | 516 | 194 | 0 | 119 | 313 | 1719 |
| 04:45 PM | 151 | **285** | **236** | **672** | 111 | 0 | 142 | 253 | **107** | **313** | 155 | **575** | 165 | 0 | 88 | 253 | **1753** |
| 05:00 PM | 161 | 241 | 217 | 619 | 123 | 0 | 126 | 249 | 97 | 239 | **172** | 508 | **205** | 0 | 124 | 329 | 1705 |
| Total Volume | 636 | 1022 | 878 | 2536 | 460 | 0 | 544 | 1004 | 369 | 1078 | 653 | 2100 | 767 | 0 | 472 | 1239 | 6879 |
| % App. Total | 25.1 | 40.3 | 34.6 | | 45.8 | 0 | 54.2 | | 17.6 | 51.3 | 31.1 | | 61.9 | 0 | 38.1 | | |
| PHF | .941 | .896 | .930 | .943 | .891 | .000 | .913 | .980 | .862 | .861 | .949 | .913 | .935 | .000 | .837 | .900 | .981 |

Counts Unlimited, Inc.
PO Box 1178
Corona, CA 92878
(951) 268-6268

City of Fontana
N/S: Sierra Avenue
E/W: I-10 Eastbound / Westbound Ramps
Weather: Clear

File Name : FONSI10PM
Site Code : 06714097
Start Date : 3/11/2014
Page No : 2

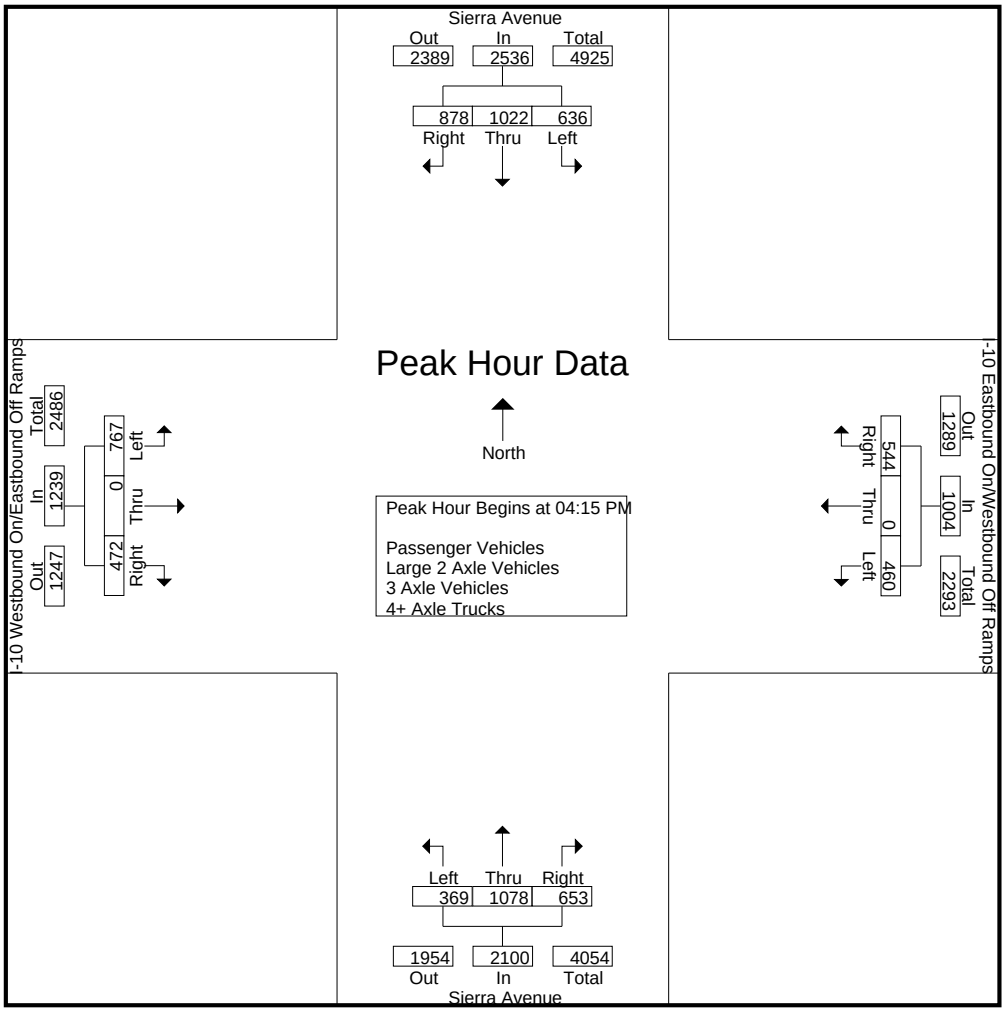


Peak Hour Analysis From 04:00 PM to 05:45 PM - Peak 1 of 1

Peak Hour for Each Approach Begins at:

| | 04:30 PM | | | | 04:15 PM | | | | 04:30 PM | | | | 05:00 PM | | | |
|---|---|---|---|---|---|---|---|---|---|---|---|---|---|---|---|---|
| +0 mins. | 155 | 261 | 218 | 634 | 97 | 0 | **149** | 246 | 92 | 260 | 164 | 516 | 205 | 0 | **124** | 329 |
| +15 mins. | 151 | **285** | **236** | **672** | **129** | 0 | 127 | **256** | 107 | **313** | 155 | **575** | 165 | 0 | 114 | 279 |
| +30 mins. | **161** | 241 | 217 | 619 | 111 | 0 | 142 | 253 | 97 | 239 | **172** | 508 | **252** | 0 | 112 | **364** |
| +45 mins. | 136 | 270 | 210 | 616 | 123 | 0 | 126 | 249 | **112** | 306 | 142 | 560 | 220 | 0 | 121 | 341 |
| Total Volume | 603 | 1057 | 881 | 2541 | 460 | 0 | 544 | 1004 | 408 | 1118 | 633 | 2159 | 842 | 0 | 471 | 1313 |
| % App. Total | 23.7 | 41.6 | 34.7 | | 45.8 | 0 | 54.2 | | 18.9 | 51.8 | 29.3 | | 64.1 | 0 | 35.9 | |
| PHF | .936 | .927 | .933 | .945 | .891 | .000 | .913 | .980 | .911 | .893 | .920 | .939 | .835 | .000 | .950 | .902 |

Counts Unlimited, Inc.
PO Box 1178
Corona, CA 92878
(951) 268-6268

City of Fontana
N/S: Sierra Avenue
E/W: I-10 Eastbound / Westbound Ramps
Weather: Clear

File Name : FONSI10PM
Site Code : 06714097
Start Date : 3/11/2014
Page No : 1

Groups Printed- Passenger Vehicles

| | Sierra Avenue Southbound | | | | I-10 Eastbound On/Westbound Off Ramps Westbound | | | | Sierra Avenue Northbound | | | | I-10 Westbound On/Eastbound Off Ramps Eastbound | | | | |
|---|---|---|---|---|---|---|---|---|---|---|---|---|---|---|---|---|---|
| Start Time | Left | Thru | Right | App. Total | Left | Thru | Right | App. Total | Left | Thru | Right | App. Total | Left | Thru | Right | App. Total | Int. Total |
| 04:00 PM | 154 | 215 | 197 | 566 | 95 | 0 | 123 | 218 | 98 | 255 | 135 | 488 | 174 | 0 | 119 | 293 | 1565 |
| 04:15 PM | 165 | 234 | 203 | 602 | 92 | 0 | 145 | 237 | 70 | 264 | 152 | 486 | 200 | 0 | 139 | 339 | 1664 |
| 04:30 PM | 150 | 259 | 215 | 624 | 129 | 0 | 126 | 255 | 90 | 257 | 160 | 507 | 192 | 0 | 114 | 306 | 1692 |
| 04:45 PM | 145 | 284 | 233 | 662 | 107 | 0 | 140 | 247 | 101 | 309 | 151 | 561 | 162 | 0 | 85 | 247 | 1717 |
| Total | 614 | 992 | 848 | 2454 | 423 | 0 | 534 | 957 | 359 | 1085 | 598 | 2042 | 728 | 0 | 457 | 1185 | 6638 |
| 05:00 PM | 155 | 241 | 215 | 611 | 117 | 0 | 123 | 240 | 95 | 238 | 169 | 502 | 202 | 0 | 123 | 325 | 1678 |
| 05:15 PM | 131 | 268 | 207 | 606 | 95 | 0 | 137 | 232 | 109 | 306 | 136 | 551 | 165 | 0 | 110 | 275 | 1664 |
| 05:30 PM | 118 | 249 | 183 | 550 | 70 | 0 | 59 | 129 | 73 | 253 | 107 | 433 | 251 | 0 | 106 | 357 | 1469 |
| 05:45 PM | 125 | 258 | 172 | 555 | 84 | 0 | 103 | 187 | 86 | 278 | 105 | 469 | 217 | 0 | 119 | 336 | 1547 |
| Total | 529 | 1016 | 777 | 2322 | 366 | 0 | 422 | 788 | 363 | 1075 | 517 | 1955 | 835 | 0 | 458 | 1293 | 6358 |
| Grand Total | 1143 | 2008 | 1625 | 4776 | 789 | 0 | 956 | 1745 | 722 | 2160 | 1115 | 3997 | 1563 | 0 | 915 | 2478 | 12996 |
| Apprch % | 23.9 | 42 | 34 | | 45.2 | 0 | 54.8 | | 18.1 | 54 | 27.9 | | 63.1 | 0 | 36.9 | | |
| Total % | 8.8 | 15.5 | 12.5 | 36.7 | 6.1 | 0 | 7.4 | 13.4 | 5.6 | 16.6 | 8.6 | 30.8 | 12 | 0 | 7 | 19.1 | |

| | Sierra Avenue Southbound | | | | I-10 Eastbound On/Westbound Off Ramps Westbound | | | | Sierra Avenue Northbound | | | | I-10 Westbound On/Eastbound Off Ramps Eastbound | | | | |
|---|---|---|---|---|---|---|---|---|---|---|---|---|---|---|---|---|---|
| Start Time | Left | Thru | Right | App. Total | Left | Thru | Right | App. Total | Left | Thru | Right | App. Total | Left | Thru | Right | App. Total | Int. Total |
| Peak Hour Analysis From 04:15 PM to 05:00 PM - Peak 1 of 1 | | | | | | | | | | | | | | | | | |
| Peak Hour for Entire Intersection Begins at 04:15 PM | | | | | | | | | | | | | | | | | |
| 04:15 PM | **165** | 234 | 203 | 602 | 92 | 0 | **145** | 237 | 70 | 264 | 152 | 486 | 200 | 0 | **139** | **339** | 1664 |
| 04:30 PM | 150 | 259 | 215 | 624 | **129** | 0 | 126 | **255** | 90 | 257 | 160 | 507 | 192 | 0 | 114 | 306 | 1692 |
| 04:45 PM | 145 | **284** | **233** | **662** | 107 | 0 | 140 | 247 | **101** | **309** | 151 | **561** | 162 | 0 | 85 | 247 | **1717** |
| 05:00 PM | 155 | 241 | 215 | 611 | 117 | 0 | 123 | 240 | 95 | 238 | **169** | 502 | **202** | 0 | 123 | 325 | 1678 |
| Total Volume | 615 | 1018 | 866 | 2499 | 445 | 0 | 534 | 979 | 356 | 1068 | 632 | 2056 | 756 | 0 | 461 | 1217 | 6751 |
| % App. Total | 24.6 | 40.7 | 34.7 | | 45.5 | 0 | 54.5 | | 17.3 | 51.9 | 30.7 | | 62.1 | 0 | 37.9 | | |
| PHF | .932 | .896 | .929 | .944 | .862 | .000 | .921 | .960 | .881 | .864 | .935 | .916 | .936 | .000 | .829 | .897 | .983 |

Counts Unlimited, Inc.
PO Box 1178
Corona, CA 92878
(951) 268-6268

City of Fontana
N/S: Sierra Avenue
E/W: I-10 Eastbound / Westbound Ramps
Weather: Clear

File Name : FONSI10PM
Site Code : 06714097
Start Date : 3/11/2014
Page No : 2

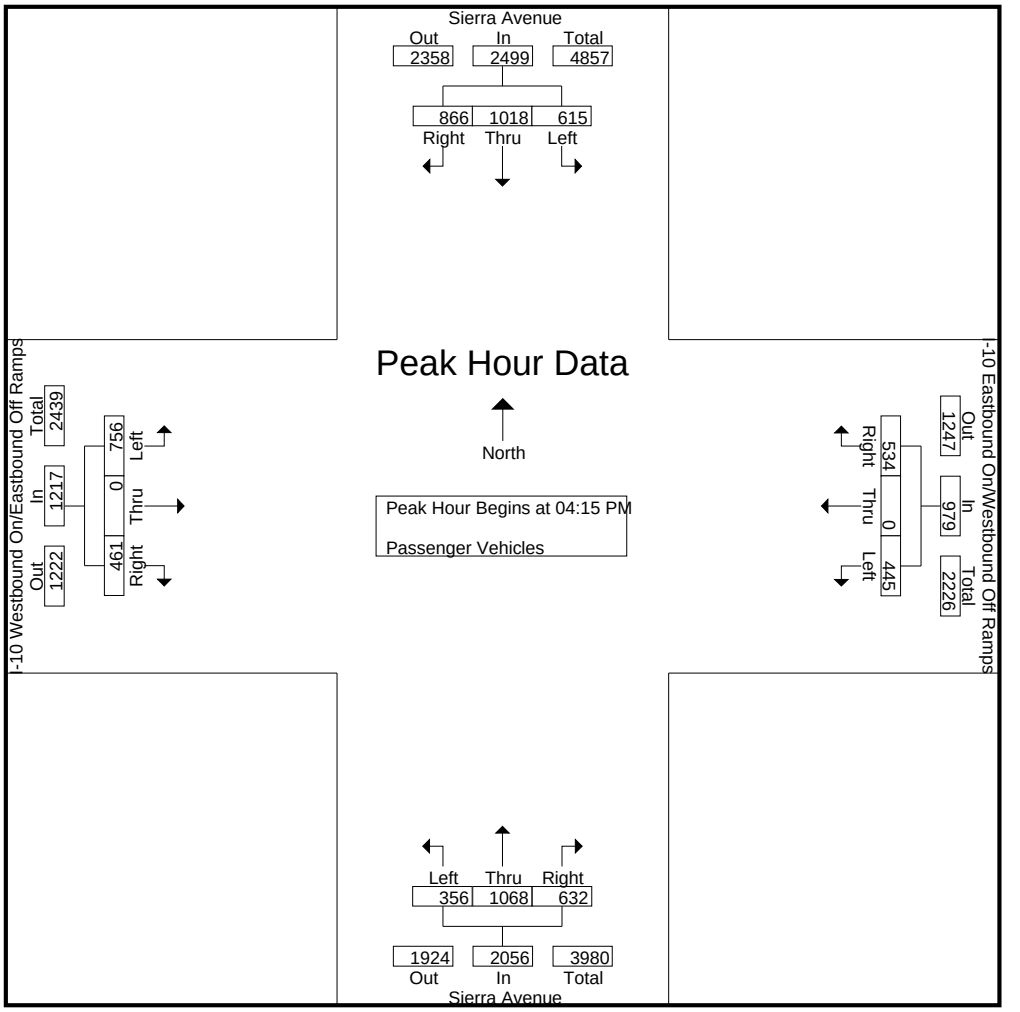


Peak Hour Analysis From 04:15 PM to 05:00 PM - Peak 1 of 1

Peak Hour for Each Approach Begins at:

| | 04:15 PM | | | | 04:15 PM | | | | 04:15 PM | | | | 04:15 PM | | | |
|---|---|---|---|---|---|---|---|---|---|---|---|---|---|---|---|---|
| +0 mins. | **165** | 234 | 203 | 602 | 92 | 0 | **145** | 237 | 70 | 264 | 152 | 486 | 200 | 0 | **139** | **339** |
| +15 mins. | 150 | 259 | 215 | 624 | **129** | 0 | 126 | **255** | 90 | 257 | 160 | 507 | 192 | 0 | 114 | 306 |
| +30 mins. | 145 | **284** | **233** | **662** | 107 | 0 | 140 | 247 | **101** | **309** | 151 | **561** | 162 | 0 | 85 | 247 |
| +45 mins. | 155 | 241 | 215 | 611 | 117 | 0 | 123 | 240 | 95 | 238 | **169** | 502 | **202** | 0 | 123 | 325 |
| Total Volume | 615 | 1018 | 866 | 2499 | 445 | 0 | 534 | 979 | 356 | 1068 | 632 | 2056 | 756 | 0 | 461 | 1217 |
| % App. Total | 24.6 | 40.7 | 34.7 | | 45.5 | 0 | 54.5 | | 17.3 | 51.9 | 30.7 | | 62.1 | 0 | 37.9 | |
| PHF | .932 | .896 | .929 | .944 | .862 | .000 | .921 | .960 | .881 | .864 | .935 | .916 | .936 | .000 | .829 | .897 |

Counts Unlimited, Inc.
PO Box 1178
Corona, CA 92878
(951) 268-6268

City of Fontana
N/S: Sierra Avenue
E/W: I-10 Eastbound / Westbound Ramps
Weather: Clear

File Name : FONSI10PM
Site Code : 06714097
Start Date : 3/11/2014
Page No : 1

Groups Printed- Large 2 Axle Vehicles

| | Sierra Avenue Southbound | | | | I-10 Eastbound On/Westbound Off Ramps Westbound | | | | Sierra Avenue Northbound | | | | I-10 Westbound On/Eastbound Off Ramps Eastbound | | | | |
|---|---|---|---|---|---|---|---|---|---|---|---|---|---|---|---|---|---|
| Start Time | Left | Thru | Right | App. Total | Left | Thru | Right | App. Total | Left | Thru | Right | App. Total | Left | Thru | Right | App. Total | Int. Total |
| 04:00 PM | 0 | 1 | 0 | 1 | 0 | 0 | 3 | 3 | 1 | 2 | 1 | 4 | 4 | 0 | 1 | 5 | 13 |
| 04:15 PM | 0 | 1 | 2 | 3 | 1 | 0 | 1 | 2 | 1 | 2 | 2 | 5 | 3 | 0 | 1 | 4 | 14 |
| 04:30 PM | 2 | 1 | 2 | 5 | 0 | 0 | 1 | 1 | 0 | 2 | 2 | 4 | 2 | 0 | 1 | 3 | 13 |
| 04:45 PM | 2 | 1 | 3 | 6 | 1 | 0 | 1 | 2 | 1 | 4 | 0 | 5 | 0 | 0 | 1 | 1 | 14 |
| Total | 4 | 4 | 7 | 15 | 2 | 0 | 6 | 8 | 3 | 10 | 5 | 18 | 9 | 0 | 4 | 13 | 54 |
| 05:00 PM | 2 | 0 | 1 | 3 | 3 | 0 | 1 | 4 | 0 | 1 | 1 | 2 | 1 | 0 | 0 | 1 | 10 |
| 05:15 PM | 1 | 2 | 1 | 4 | 2 | 0 | 0 | 2 | 1 | 0 | 1 | 2 | 0 | 0 | 1 | 1 | 9 |
| 05:30 PM | 0 | 0 | 3 | 3 | 0 | 0 | 0 | 0 | 1 | 0 | 1 | 2 | 0 | 0 | 2 | 2 | 7 |
| 05:45 PM | 0 | 0 | 0 | 0 | 1 | 0 | 2 | 3 | 3 | 2 | 1 | 6 | 1 | 0 | 0 | 1 | 10 |
| Total | 3 | 2 | 5 | 10 | 6 | 0 | 3 | 9 | 5 | 3 | 4 | 12 | 2 | 0 | 3 | 5 | 36 |
| Grand Total | 7 | 6 | 12 | 25 | 8 | 0 | 9 | 17 | 8 | 13 | 9 | 30 | 11 | 0 | 7 | 18 | 90 |
| Apprch % | 28 | 24 | 48 | | 47.1 | 0 | 52.9 | | 26.7 | 43.3 | 30 | | 61.1 | 0 | 38.9 | | |
| Total % | 7.8 | 6.7 | 13.3 | 27.8 | 8.9 | 0 | 10 | 18.9 | 8.9 | 14.4 | 10 | 33.3 | 12.2 | 0 | 7.8 | 20 | |

| | Sierra Avenue Southbound | | | | I-10 Eastbound On/Westbound Off Ramps Westbound | | | | Sierra Avenue Northbound | | | | I-10 Westbound On/Eastbound Off Ramps Eastbound | | | | |
|---|---|---|---|---|---|---|---|---|---|---|---|---|---|---|---|---|---|
| Start Time | Left | Thru | Right | App. Total | Left | Thru | Right | App. Total | Left | Thru | Right | App. Total | Left | Thru | Right | App. Total | Int. Total |
| Peak Hour Analysis From 04:15 PM to 05:00 PM - Peak 1 of 1 | | | | | | | | | | | | | | | | | |
| Peak Hour for Entire Intersection Begins at 04:15 PM | | | | | | | | | | | | | | | | | |
| 04:15 PM | 0 | **1** | 2 | 3 | 1 | 0 | **1** | 2 | **1** | 2 | **2** | **5** | **3** | 0 | **1** | **4** | **14** |
| 04:30 PM | **2** | 1 | 2 | 5 | 0 | 0 | 1 | 1 | 0 | 2 | 2 | 4 | 2 | 0 | 1 | 3 | 13 |
| 04:45 PM | 2 | 1 | **3** | **6** | 1 | 0 | 1 | 2 | 1 | **4** | 0 | 5 | 0 | 0 | 1 | 1 | 14 |
| 05:00 PM | 2 | 0 | 1 | 3 | **3** | 0 | 1 | **4** | 0 | 1 | 1 | 2 | 1 | 0 | 0 | 1 | 10 |
| Total Volume | 6 | 3 | 8 | 17 | 5 | 0 | 4 | 9 | 2 | 9 | 5 | 16 | 6 | 0 | 3 | 9 | 51 |
| % App. Total | 35.3 | 17.6 | 47.1 | | 55.6 | 0 | 44.4 | | 12.5 | 56.2 | 31.2 | | 66.7 | 0 | 33.3 | | |
| PHF | .750 | .750 | .667 | .708 | .417 | .000 | 1.00 | .563 | .500 | .563 | .625 | .800 | .500 | .000 | .750 | .563 | .911 |

Counts Unlimited, Inc.
PO Box 1178
Corona, CA 92878
(951) 268-6268

City of Fontana
N/S: Sierra Avenue
E/W: I-10 Eastbound / Westbound Ramps
Weather: Clear

File Name : FONSI10PM
Site Code : 06714097
Start Date : 3/11/2014
Page No : 2

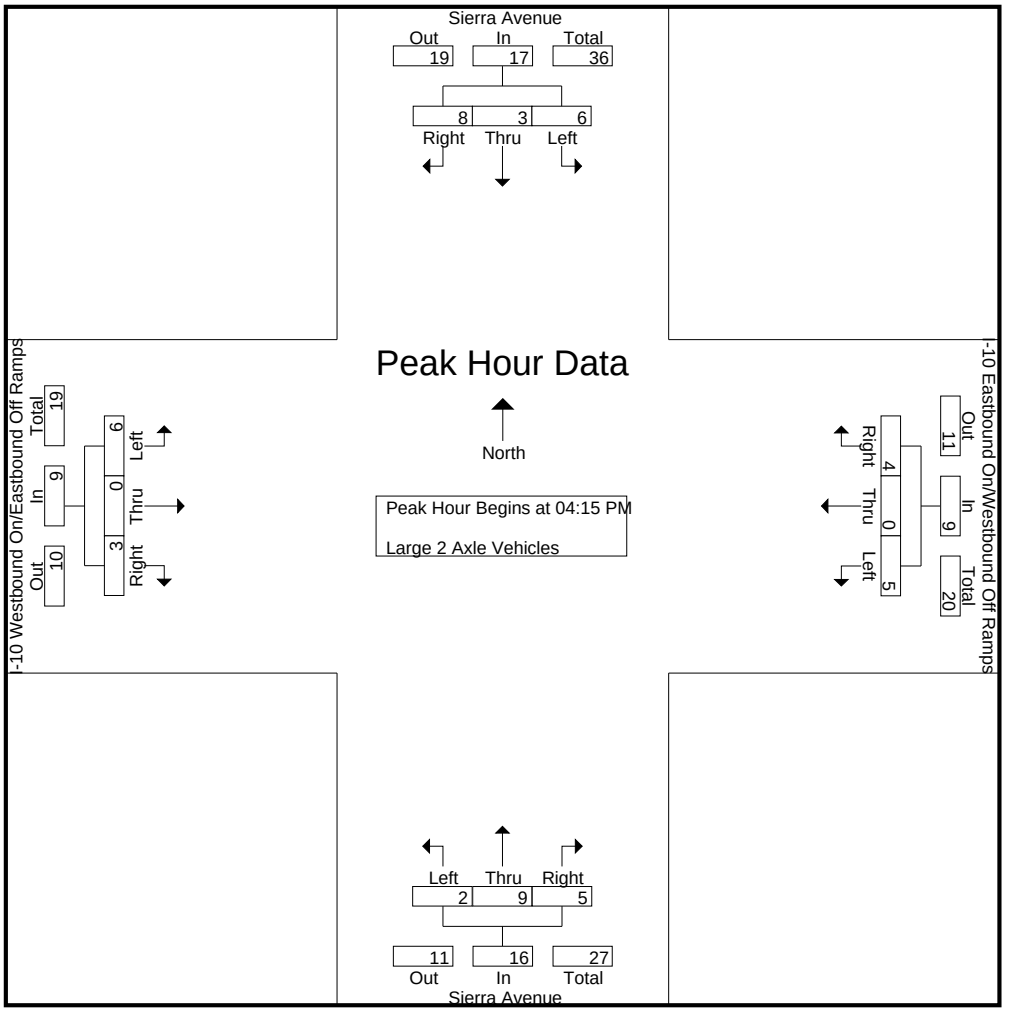


Peak Hour Analysis From 04:15 PM to 05:00 PM - Peak 1 of 1

Peak Hour for Each Approach Begins at:

| | 04:15 PM | | | | 04:15 PM | | | | 04:15 PM | | | | 04:15 PM | | | |
|---|---|---|---|---|---|---|---|---|---|---|---|---|---|---|---|---|
| +0 mins. | 0 | **1** | 2 | 3 | 1 | 0 | **1** | 2 | **1** | 2 | **2** | **5** | **3** | 0 | **1** | **4** |
| +15 mins. | **2** | 1 | 2 | 5 | 0 | 0 | 1 | 1 | 0 | 2 | 2 | 4 | 2 | 0 | 1 | 3 |
| +30 mins. | 2 | 1 | **3** | **6** | 1 | 0 | 1 | 2 | 1 | **4** | 0 | 5 | 0 | 0 | 1 | 1 |
| +45 mins. | 2 | 0 | 1 | 3 | **3** | 0 | 1 | **4** | 0 | 1 | 1 | 2 | 1 | 0 | 0 | 1 |
| Total Volume | 6 | 3 | 8 | 17 | 5 | 0 | 4 | 9 | 2 | 9 | 5 | 16 | 6 | 0 | 3 | 9 |
| % App. Total | 35.3 | 17.6 | 47.1 | | 55.6 | 0 | 44.4 | | 12.5 | 56.2 | 31.2 | | 66.7 | 0 | 33.3 | |
| PHF | .750 | .750 | .667 | .708 | .417 | .000 | 1.000 | .563 | .500 | .563 | .625 | .800 | .500 | .000 | .750 | .563 |

Counts Unlimited, Inc.
PO Box 1178
Corona, CA 92878
(951) 268-6268

City of Fontana
N/S: Sierra Avenue
E/W: I-10 Eastbound / Westbound Ramps
Weather: Clear

File Name : FONSI10PM
Site Code : 06714097
Start Date : 3/11/2014
Page No : 1

Groups Printed- 3 Axle Vehicles

| | Sierra Avenue Southbound | | | | I-10 Eastbound On/Westbound Off Ramps Westbound | | | | Sierra Avenue Northbound | | | | I-10 Westbound On/Eastbound Off Ramps Eastbound | | | | |
|---|---|---|---|---|---|---|---|---|---|---|---|---|---|---|---|---|---|
| Start Time | Left | Thru | Right | App. Total | Left | Thru | Right | App. Total | Left | Thru | Right | App. Total | Left | Thru | Right | App. Total | Int. Total |
| 04:00 PM | 0 | 0 | 2 | 2 | 0 | 0 | 0 | 0 | 2 | 1 | 1 | 4 | 0 | 0 | 1 | 1 | 7 |
| 04:15 PM | 3 | 0 | 0 | 3 | 1 | 0 | 0 | 1 | 0 | 0 | 2 | 2 | 0 | 0 | 0 | 0 | 6 |
| 04:30 PM | 3 | 1 | 0 | 4 | 0 | 0 | 0 | 0 | 0 | 0 | 0 | 0 | 0 | 0 | 1 | 1 | 5 |
| 04:45 PM | 1 | 0 | 0 | 1 | 1 | 0 | 0 | 1 | 1 | 0 | 1 | 2 | 0 | 0 | 0 | 0 | 4 |
| Total | 7 | 1 | 2 | 10 | 2 | 0 | 0 | 2 | 3 | 1 | 4 | 8 | 0 | 0 | 2 | 2 | 22 |
| 05:00 PM | 0 | 0 | 1 | 1 | 1 | 0 | 1 | 2 | 1 | 0 | 0 | 1 | 0 | 0 | 0 | 0 | 4 |
| 05:15 PM | 1 | 0 | 0 | 1 | 1 | 0 | 2 | 3 | 1 | 0 | 0 | 1 | 0 | 0 | 1 | 1 | 6 |
| 05:30 PM | 1 | 0 | 0 | 1 | 0 | 0 | 0 | 0 | 0 | 1 | 1 | 2 | 0 | 0 | 3 | 3 | 6 |
| 05:45 PM | 3 | 0 | 2 | 5 | 0 | 0 | 2 | 2 | 1 | 1 | 0 | 2 | 0 | 0 | 0 | 0 | 9 |
| Total | 5 | 0 | 3 | 8 | 2 | 0 | 5 | 7 | 3 | 2 | 1 | 6 | 0 | 0 | 4 | 4 | 25 |
| Grand Total | 12 | 1 | 5 | 18 | 4 | 0 | 5 | 9 | 6 | 3 | 5 | 14 | 0 | 0 | 6 | 6 | 47 |
| Apprch % | 66.7 | 5.6 | 27.8 | | 44.4 | 0 | 55.6 | | 42.9 | 21.4 | 35.7 | | 0 | 0 | 100 | | |
| Total % | 25.5 | 2.1 | 10.6 | 38.3 | 8.5 | 0 | 10.6 | 19.1 | 12.8 | 6.4 | 10.6 | 29.8 | 0 | 0 | 12.8 | 12.8 | |

| | Sierra Avenue Southbound | | | | I-10 Eastbound On/Westbound Off Ramps Westbound | | | | Sierra Avenue Northbound | | | | I-10 Westbound On/Eastbound Off Ramps Eastbound | | | | |
|---|---|---|---|---|---|---|---|---|---|---|---|---|---|---|---|---|---|
| Start Time | Left | Thru | Right | App. Total | Left | Thru | Right | App. Total | Left | Thru | Right | App. Total | Left | Thru | Right | App. Total | Int. Total |
| Peak Hour Analysis From 04:15 PM to 05:00 PM - Peak 1 of 1 | | | | | | | | | | | | | | | | | |
| Peak Hour for Entire Intersection Begins at 04:15 PM | | | | | | | | | | | | | | | | | |
| 04:15 PM | **3** | 0 | 0 | 3 | **1** | 0 | 0 | 1 | 0 | 0 | **2** | **2** | 0 | 0 | 0 | 0 | **6** |
| 04:30 PM | 3 | **1** | 0 | **4** | 0 | 0 | 0 | 0 | 0 | 0 | 0 | 0 | 0 | 0 | **1** | **1** | 5 |
| 04:45 PM | 1 | 0 | 0 | 1 | 1 | 0 | 0 | 1 | **1** | 0 | 1 | 2 | 0 | 0 | 0 | 0 | 4 |
| 05:00 PM | 0 | 0 | **1** | 1 | 1 | 0 | **1** | **2** | 1 | 0 | 0 | 1 | 0 | 0 | 0 | 0 | 4 |
| Total Volume | 7 | 1 | 1 | 9 | 3 | 0 | 1 | 4 | 2 | 0 | 3 | 5 | 0 | 0 | 1 | 1 | 19 |
| % App. Total | 77.8 | 11.1 | 11.1 | | 75 | 0 | 25 | | 40 | 0 | 60 | | 0 | 0 | 100 | | |
| PHF | .583 | .250 | .250 | .563 | .750 | .000 | .250 | .500 | .500 | .000 | .375 | .625 | .000 | .000 | .250 | .250 | .792 |

Counts Unlimited, Inc.
PO Box 1178
Corona, CA 92878
(951) 268-6268

City of Fontana
N/S: Sierra Avenue
E/W: I-10 Eastbound / Westbound Ramps
Weather: Clear

File Name : FONSI10PM
Site Code : 06714097
Start Date : 3/11/2014
Page No : 2

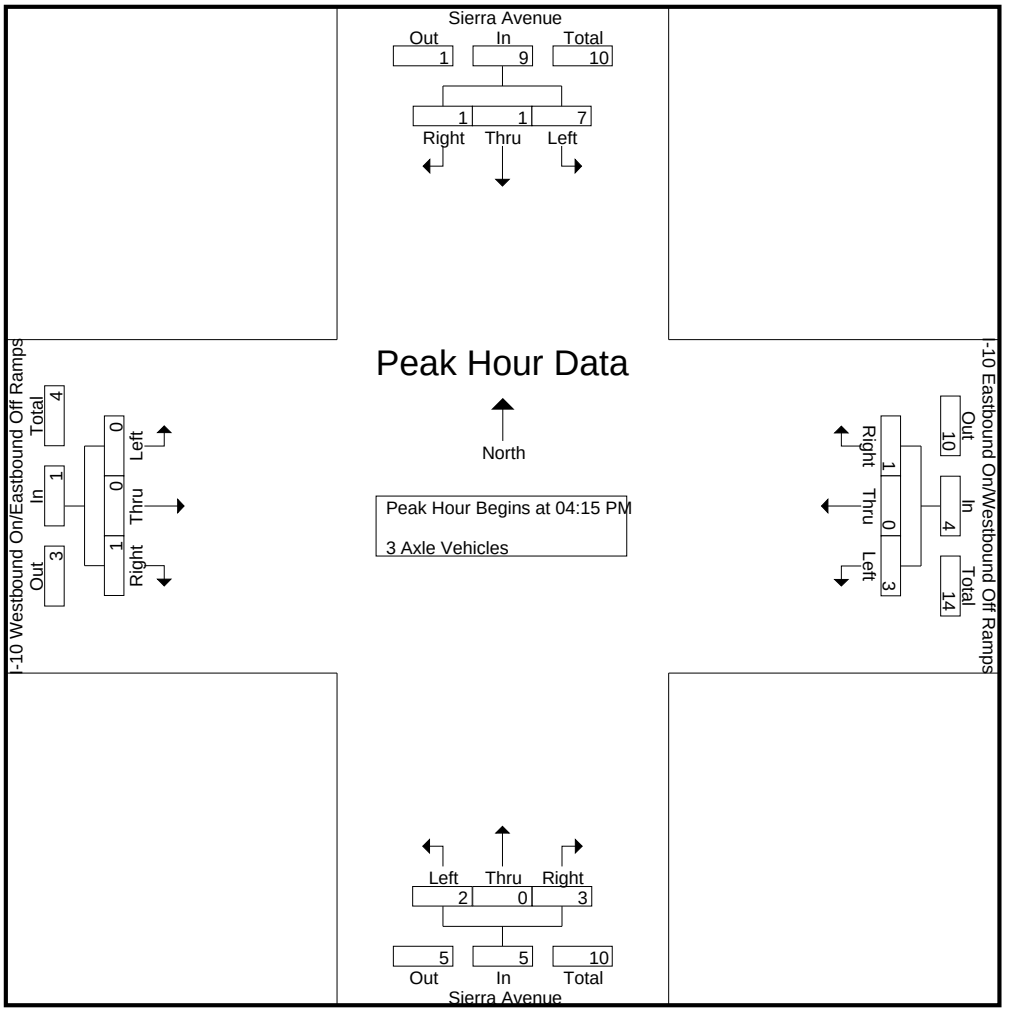


Peak Hour Analysis From 04:15 PM to 05:00 PM - Peak 1 of 1

Peak Hour for Each Approach Begins at:

| | 04:15 PM | | | | 04:15 PM | | | | 04:15 PM | | | | 04:15 PM | | | |
|---|---|---|---|---|---|---|---|---|---|---|---|---|---|---|---|---|
| +0 mins. | **3** | 0 | 0 | 3 | **1** | 0 | 0 | 1 | 0 | 0 | **2** | **2** | 0 | 0 | 0 | 0 |
| +15 mins. | 3 | **1** | 0 | **4** | 0 | 0 | 0 | 0 | 0 | 0 | 0 | 0 | 0 | 0 | **1** | **1** |
| +30 mins. | 1 | 0 | 0 | 1 | 1 | 0 | 0 | 1 | **1** | 0 | 1 | 2 | 0 | 0 | 0 | 0 |
| +45 mins. | 0 | 0 | **1** | 1 | 1 | 0 | **1** | **2** | 1 | 0 | 0 | 1 | 0 | 0 | 0 | 0 |
| Total Volume | 7 | 1 | 1 | 9 | 3 | 0 | 1 | 4 | 2 | 0 | 3 | 5 | 0 | 0 | 1 | 1 |
| % App. Total | 77.8 | 11.1 | 11.1 | | 75 | 0 | 25 | | 40 | 0 | 60 | | 0 | 0 | 100 | |
| PHF | .583 | .250 | .250 | .563 | .750 | .000 | .250 | .500 | .500 | .000 | .375 | .625 | .000 | .000 | .250 | .250 |

Counts Unlimited, Inc.
PO Box 1178
Corona, CA 92878
(951) 268-6268

City of Fontana
N/S: Sierra Avenue
E/W: I-10 Eastbound / Westbound Ramps
Weather: Clear

File Name : FONSI10PM
Site Code : 06714097
Start Date : 3/11/2014
Page No : 1

Groups Printed- 4+ Axle Trucks

| | Sierra Avenue Southbound | | | | I-10 Eastbound On/Westbound Off Ramps Westbound | | | | Sierra Avenue Northbound | | | | I-10 Westbound On/Eastbound Off Ramps Eastbound | | | | |
|---|---|---|---|---|---|---|---|---|---|---|---|---|---|---|---|---|---|
| Start Time | Left | Thru | Right | App. Total | Left | Thru | Right | App. Total | Left | Thru | Right | App. Total | Left | Thru | Right | App. Total | Int. Total |
| 04:00 PM | 2 | 0 | 1 | 3 | 1 | 0 | 0 | 1 | 2 | 0 | 4 | 6 | 2 | 0 | 1 | 3 | 13 |
| 04:15 PM | 1 | 0 | 2 | 3 | 3 | 0 | 3 | 6 | 2 | 0 | 6 | 8 | 0 | 0 | 1 | 1 | 18 |
| 04:30 PM | 0 | 0 | 1 | 1 | 0 | 0 | 0 | 0 | 2 | 1 | 2 | 5 | 0 | 0 | 3 | 3 | 9 |
| 04:45 PM | 3 | 0 | 0 | 3 | 2 | 0 | 1 | 3 | 4 | 0 | 3 | 7 | 3 | 0 | 2 | 5 | 18 |
| Total | 6 | 0 | 4 | 10 | 6 | 0 | 4 | 10 | 10 | 1 | 15 | 26 | 5 | 0 | 7 | 12 | 58 |
| 05:00 PM | 4 | 0 | 0 | 4 | 2 | 0 | 1 | 3 | 1 | 0 | 2 | 3 | 2 | 0 | 1 | 3 | 13 |
| 05:15 PM | 3 | 0 | 2 | 5 | 0 | 0 | 2 | 2 | 1 | 0 | 5 | 6 | 0 | 0 | 2 | 2 | 15 |
| 05:30 PM | 1 | 1 | 0 | 2 | 0 | 0 | 1 | 1 | 1 | 0 | 6 | 7 | 1 | 0 | 1 | 2 | 12 |
| 05:45 PM | 2 | 0 | 0 | 2 | 3 | 0 | 1 | 4 | 3 | 1 | 3 | 7 | 2 | 0 | 2 | 4 | 17 |
| Total | 10 | 1 | 2 | 13 | 5 | 0 | 5 | 10 | 6 | 1 | 16 | 23 | 5 | 0 | 6 | 11 | 57 |
| Grand Total | 16 | 1 | 6 | 23 | 11 | 0 | 9 | 20 | 16 | 2 | 31 | 49 | 10 | 0 | 13 | 23 | 115 |
| Apprch % | 69.6 | 4.3 | 26.1 | | 55 | 0 | 45 | | 32.7 | 4.1 | 63.3 | | 43.5 | 0 | 56.5 | | |
| Total % | 13.9 | 0.9 | 5.2 | 20 | 9.6 | 0 | 7.8 | 17.4 | 13.9 | 1.7 | 27 | 42.6 | 8.7 | 0 | 11.3 | 20 | |

| | Sierra Avenue Southbound | | | | I-10 Eastbound On/Westbound Off Ramps Westbound | | | | Sierra Avenue Northbound | | | | I-10 Westbound On/Eastbound Off Ramps Eastbound | | | | |
|---|---|---|---|---|---|---|---|---|---|---|---|---|---|---|---|---|---|
| Start Time | Left | Thru | Right | App. Total | Left | Thru | Right | App. Total | Left | Thru | Right | App. Total | Left | Thru | Right | App. Total | Int. Total |
| Peak Hour Analysis From 04:15 PM to 05:00 PM - Peak 1 of 1 | | | | | | | | | | | | | | | | | |
| Peak Hour for Entire Intersection Begins at 04:15 PM | | | | | | | | | | | | | | | | | |
| 04:15 PM | 1 | 0 | **2** | 3 | **3** | 0 | **3** | **6** | 2 | 0 | **6** | **8** | 0 | 0 | 1 | 1 | **18** |
| 04:30 PM | 0 | 0 | 1 | 1 | 0 | 0 | 0 | 0 | 2 | **1** | 2 | 5 | 0 | 0 | **3** | 3 | 9 |
| 04:45 PM | 3 | 0 | 0 | 3 | 2 | 0 | 1 | 3 | **4** | 0 | 3 | 7 | **3** | 0 | 2 | **5** | 18 |
| 05:00 PM | **4** | 0 | 0 | **4** | 2 | 0 | 1 | 3 | 1 | 0 | 2 | 3 | 2 | 0 | 1 | 3 | 13 |
| Total Volume | 8 | 0 | 3 | 11 | 7 | 0 | 5 | 12 | 9 | 1 | 13 | 23 | 5 | 0 | 7 | 12 | 58 |
| % App. Total | 72.7 | 0 | 27.3 | | 58.3 | 0 | 41.7 | | 39.1 | 4.3 | 56.5 | | 41.7 | 0 | 58.3 | | |
| PHF | .500 | .000 | .375 | .688 | .583 | .000 | .417 | .500 | .563 | .250 | .542 | .719 | .417 | .000 | .583 | .600 | .806 |

Counts Unlimited, Inc.
PO Box 1178
Corona, CA 92878
(951) 268-6268

City of Fontana
N/S: Sierra Avenue
E/W: I-10 Eastbound / Westbound Ramps
Weather: Clear

File Name : FONSI10PM
Site Code : 06714097
Start Date : 3/11/2014
Page No : 2

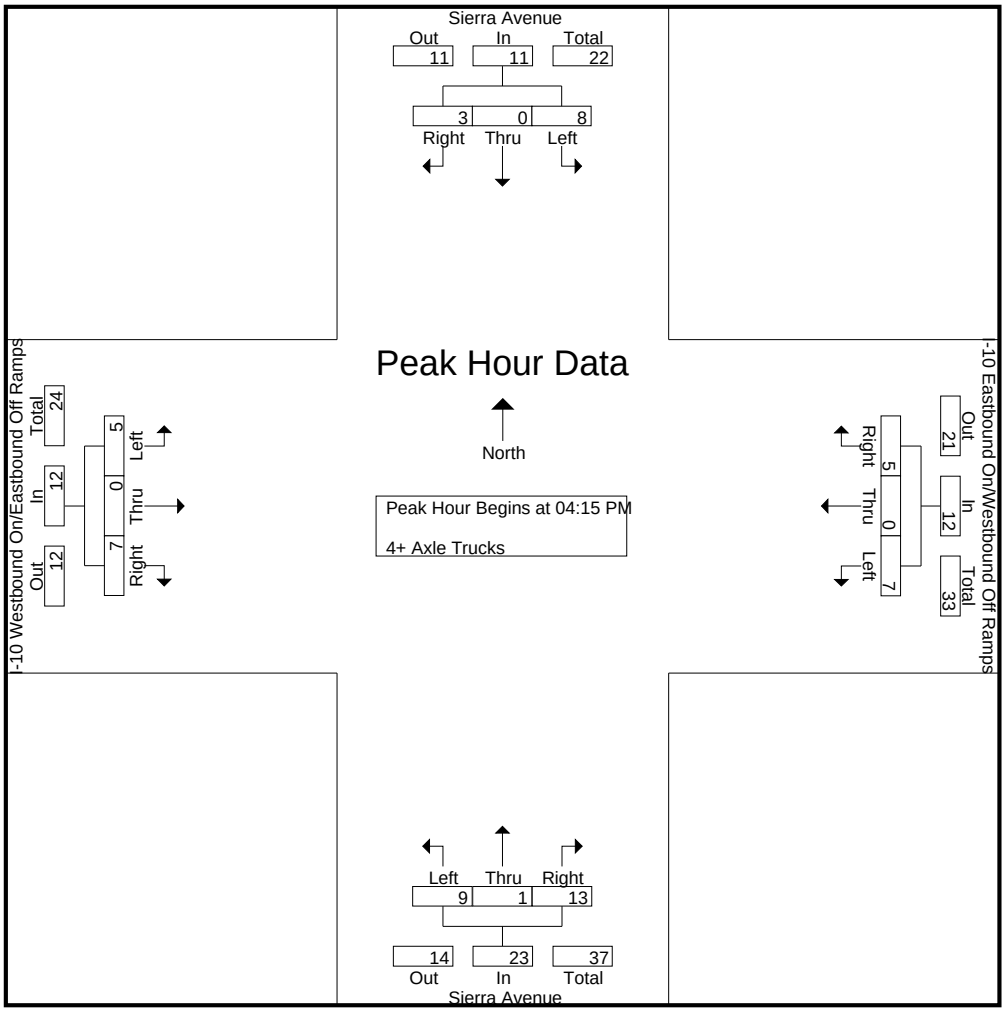


Peak Hour Analysis From 04:15 PM to 05:00 PM - Peak 1 of 1

Peak Hour for Each Approach Begins at:

| | 04:15 PM | | | | 04:15 PM | | | | 04:15 PM | | | | 04:15 PM | | | |
|---|---|---|---|---|---|---|---|---|---|---|---|---|---|---|---|---|
| +0 mins. | 1 | 0 | **2** | 3 | **3** | 0 | **3** | **6** | 2 | 0 | **6** | **8** | 0 | 0 | 1 | 1 |
| +15 mins. | 0 | 0 | 1 | 1 | 0 | 0 | 0 | 0 | 2 | **1** | 2 | 5 | 0 | 0 | **3** | 3 |
| +30 mins. | 3 | 0 | 0 | 3 | 2 | 0 | 1 | 3 | **4** | 0 | 3 | 7 | **3** | 0 | 2 | **5** |
| +45 mins. | **4** | 0 | 0 | **4** | 2 | 0 | 1 | 3 | 1 | 0 | 2 | 3 | 2 | 0 | 1 | 3 |
| Total Volume | 8 | 0 | 3 | 11 | 7 | 0 | 5 | 12 | 9 | 1 | 13 | 23 | 5 | 0 | 7 | 12 |
| % App. Total | 72.7 | 0 | 27.3 | | 58.3 | 0 | 41.7 | | 39.1 | 4.3 | 56.5 | | 41.7 | 0 | 58.3 | |
| PHF | .500 | .000 | .375 | .688 | .583 | .000 | .417 | .500 | .563 | .250 | .542 | .719 | .417 | .000 | .583 | .600 |

Counts Unlimited
PO Box 1178
Corona, CA 92878
(951) 268-6268

City of Jurupa Valley
N/S: Sierra Avenue
E/W: Slover Avenue
Weather: Clear

File Name : JVYSISLAM
Site Code : 06715550
Start Date : 10/7/2015
Page No : 1

Groups Printed- Total Volume

| | Sierra Avenue Southbound | | | | Slover Avenue Westbound | | | | Sierra Avenue Northbound | | | | Slover Avenue Eastbound | | | | |
|---|---|---|---|---|---|---|---|---|---|---|---|---|---|---|---|---|---|
| Start Time | Left | Thru | Right | App. Total | Left | Thru | Right | App. Total | Left | Thru | Right | App. Total | Left | Thru | Right | App. Total | Int. Total |
| 07:00 AM | 125 | 177 | 90 | 392 | 11 | 28 | 66 | 105 | 23 | 223 | 14 | 260 | 65 | 31 | 13 | 109 | 866 |
| 07:15 AM | 126 | 182 | 85 | 393 | 21 | 45 | 90 | 156 | 18 | 252 | 18 | 288 | 102 | 35 | 18 | 155 | 992 |
| 07:30 AM | 93 | 186 | 62 | 341 | 11 | 59 | 102 | 172 | 24 | 251 | 30 | 305 | 66 | 39 | 8 | 113 | 931 |
| 07:45 AM | 137 | 190 | 38 | 365 | 12 | 37 | 69 | 118 | 28 | 305 | 32 | 365 | 49 | 46 | 10 | 105 | 953 |
| Total | 481 | 735 | 275 | 1491 | 55 | 169 | 327 | 551 | 93 | 1031 | 94 | 1218 | 282 | 151 | 49 | 482 | 3742 |
| 08:00 AM | 130 | 158 | 44 | 332 | 20 | 33 | 88 | 141 | 23 | 271 | 32 | 326 | 59 | 53 | 13 | 125 | 924 |
| 08:15 AM | 176 | 196 | 33 | 405 | 17 | 30 | 76 | 123 | 17 | 200 | 48 | 265 | 47 | 38 | 11 | 96 | 889 |
| 08:30 AM | 118 | 235 | 436 | 789 | 17 | 29 | 91 | 137 | 18 | 210 | 27 | 255 | 45 | 32 | 13 | 90 | 1271 |
| 08:45 AM | 106 | 157 | 31 | 294 | 12 | 28 | 86 | 126 | 16 | 275 | 41 | 332 | 43 | 50 | 11 | 104 | 856 |
| Total | 530 | 746 | 544 | 1820 | 66 | 120 | 341 | 527 | 74 | 956 | 148 | 1178 | 194 | 173 | 48 | 415 | 3940 |
| Grand Total | 1011 | 1481 | 819 | 3311 | 121 | 289 | 668 | 1078 | 167 | 1987 | 242 | 2396 | 476 | 324 | 97 | 897 | 7682 |
| Apprch % | 30.5 | 44.7 | 24.7 | | 11.2 | 26.8 | 62 | | 7 | 82.9 | 10.1 | | 53.1 | 36.1 | 10.8 | | |
| Total % | 13.2 | 19.3 | 10.7 | 43.1 | 1.6 | 3.8 | 8.7 | 14 | 2.2 | 25.9 | 3.2 | 31.2 | 6.2 | 4.2 | 1.3 | 11.7 | |

| | Sierra Avenue Southbound | | | | Slover Avenue Westbound | | | | Sierra Avenue Northbound | | | | Slover Avenue Eastbound | | | | |
|---|---|---|---|---|---|---|---|---|---|---|---|---|---|---|---|---|---|
| Start Time | Left | Thru | Right | App. Total | Left | Thru | Right | App. Total | Left | Thru | Right | App. Total | Left | Thru | Right | App. Total | Int. Total |
| Peak Hour Analysis From 07:00 AM to 08:45 AM - Peak 1 of 1 | | | | | | | | | | | | | | | | | |
| Peak Hour for Entire Intersection Begins at 07:45 AM | | | | | | | | | | | | | | | | | |
| 07:45 AM | 137 | 190 | 38 | 365 | 12 | **37** | 69 | 118 | **28** | **305** | 32 | **365** | 49 | 46 | 10 | 105 | 953 |
| 08:00 AM | 130 | 158 | 44 | 332 | **20** | 33 | 88 | **141** | 23 | 271 | 32 | 326 | **59** | **53** | **13** | **125** | 924 |
| 08:15 AM | **176** | 196 | 33 | 405 | 17 | 30 | 76 | 123 | 17 | 200 | **48** | 265 | 47 | 38 | 11 | 96 | 889 |
| 08:30 AM | 118 | **235** | **436** | **789** | 17 | 29 | **91** | 137 | 18 | 210 | 27 | 255 | 45 | 32 | 13 | 90 | **1271** |
| Total Volume | 561 | 779 | 551 | 1891 | 66 | 129 | 324 | 519 | 86 | 986 | 139 | 1211 | 200 | 169 | 47 | 416 | 4037 |
| % App. Total | 29.7 | 41.2 | 29.1 | | 12.7 | 24.9 | 62.4 | | 7.1 | 81.4 | 11.5 | | 48.1 | 40.6 | 11.3 | | |
| PHF | .797 | .829 | .316 | .599 | .825 | .872 | .890 | .920 | .768 | .808 | .724 | .829 | .847 | .797 | .904 | .832 | .794 |

Counts Unlimited
PO Box 1178
Corona, CA 92878
(951) 268-6268

City of Jurupa Valley
N/S: Sierra Avenue
E/W: Slover Avenue
Weather: Clear

File Name : JVYSISLAM
Site Code : 06715550
Start Date : 10/7/2015
Page No : 2

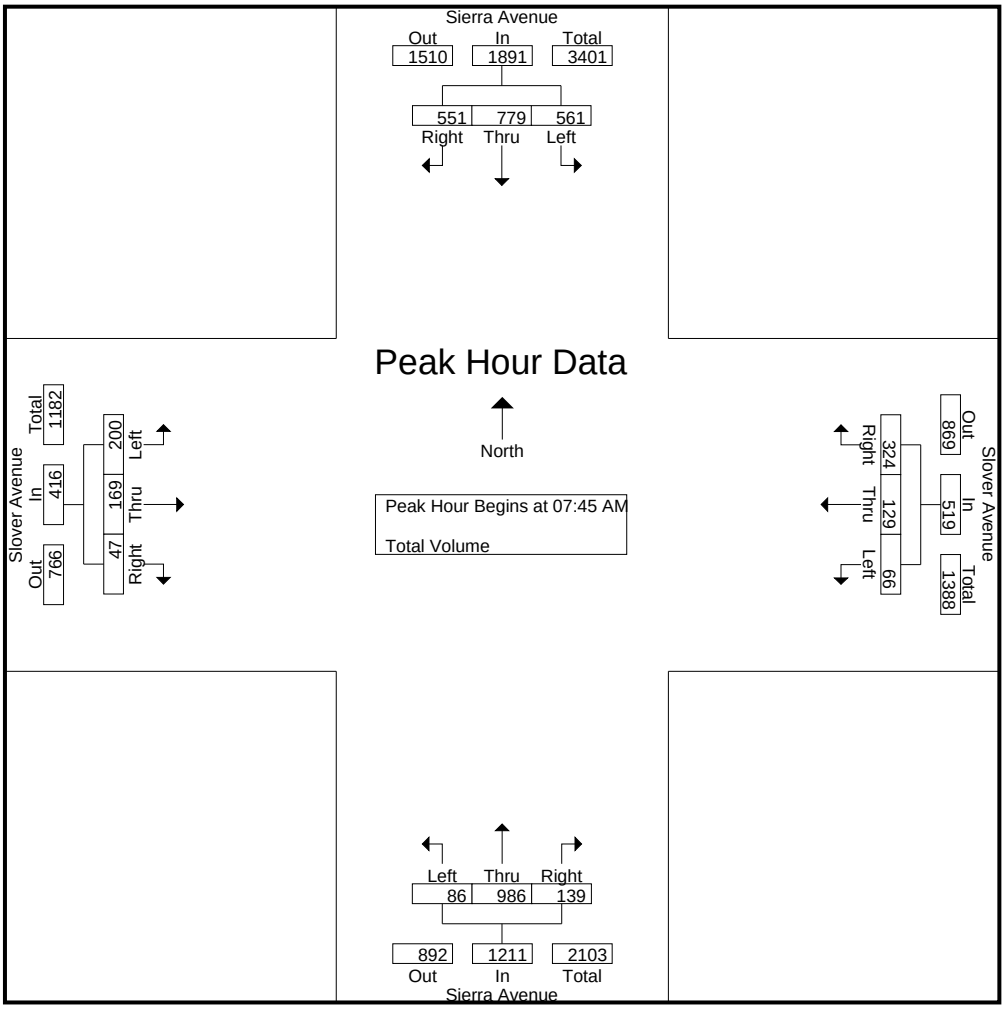


Peak Hour Analysis From 07:00 AM to 08:45 AM - Peak 1 of 1
Peak Hour for Each Approach Begins at:

| | 07:45 AM | | | | 07:15 AM | | | | 07:15 AM | | | | 07:15 AM | | | |
|---|---|---|---|---|---|---|---|---|---|---|---|---|---|---|---|---|
| +0 mins. | 137 | 190 | 38 | 365 | **21** | 45 | 90 | 156 | 18 | 252 | 18 | 288 | **102** | 35 | **18** | **155** |
| +15 mins. | 130 | 158 | 44 | 332 | 11 | **59** | **102** | **172** | 24 | 251 | 30 | 305 | 66 | 39 | 8 | 113 |
| +30 mins. | **176** | 196 | 33 | 405 | 12 | 37 | 69 | 118 | **28** | **305** | **32** | **365** | 49 | 46 | 10 | 105 |
| +45 mins. | 118 | **235** | **436** | **789** | 20 | 33 | 88 | 141 | 23 | 271 | 32 | 326 | 59 | **53** | 13 | 125 |
| Total Volume | 561 | 779 | 551 | 1891 | 64 | 174 | 349 | 587 | 93 | 1079 | 112 | 1284 | 276 | 173 | 49 | 498 |
| % App. Total | 29.7 | 41.2 | 29.1 | | 10.9 | 29.6 | 59.5 | | 7.2 | 84 | 8.7 | | 55.4 | 34.7 | 9.8 | |
| PHF | .797 | .829 | .316 | .599 | .762 | .737 | .855 | .853 | .830 | .884 | .875 | .879 | .676 | .816 | .681 | .803 |

Counts Unlimited
PO Box 1178
Corona, CA 92878
(951) 268-6268

City of Jurupa Valley
N/S: Sierra Avenue
E/W: Slover Avenue
Weather: Clear

File Name : JVYSISLPM
Site Code : 06715550
Start Date : 10/7/2015
Page No : 1

Groups Printed- Total Volume

| | Sierra Avenue Southbound | | | | Slover Avenue Westbound | | | | Sierra Avenue Northbound | | | | Slover Avenue Eastbound | | | | |
|---|---|---|---|---|---|---|---|---|---|---|---|---|---|---|---|---|---|
| Start Time | Left | Thru | Right | App. Total | Left | Thru | Right | App. Total | Left | Thru | Right | App. Total | Left | Thru | Right | App. Total | Int. Total |
| 04:00 PM | 156 | 255 | 45 | 456 | 62 | 83 | 220 | 365 | 38 | 236 | 36 | 310 | 84 | 83 | 34 | 201 | 1332 |
| 04:15 PM | 164 | 258 | 29 | 451 | 42 | 53 | 174 | 269 | 29 | 277 | 45 | 351 | 67 | 79 | 37 | 183 | 1254 |
| 04:30 PM | 177 | 241 | 56 | 474 | 40 | 47 | 210 | 297 | 36 | 255 | 38 | 329 | 73 | 103 | 29 | 205 | 1305 |
| 04:45 PM | 166 | 255 | 37 | 458 | 61 | 76 | 116 | 253 | 38 | 255 | 45 | 338 | 87 | 98 | 30 | 215 | 1264 |
| Total | 663 | 1009 | 167 | 1839 | 205 | 259 | 720 | 1184 | 141 | 1023 | 164 | 1328 | 311 | 363 | 130 | 804 | 5155 |
| 05:00 PM | 155 | 232 | 31 | 418 | 83 | 78 | 236 | 397 | 23 | 246 | 51 | 320 | 86 | 118 | 28 | 232 | 1367 |
| 05:15 PM | 166 | 280 | 34 | 480 | 51 | 51 | 191 | 293 | 42 | 268 | 45 | 355 | 65 | 112 | 27 | 204 | 1332 |
| 05:30 PM | 179 | 255 | 44 | 478 | 51 | 67 | 178 | 296 | 25 | 257 | 48 | 330 | 84 | 99 | 26 | 209 | 1313 |
| 05:45 PM | 168 | 234 | 31 | 433 | 49 | 60 | 179 | 288 | 54 | 276 | 55 | 385 | 67 | 101 | 31 | 199 | 1305 |
| Total | 668 | 1001 | 140 | 1809 | 234 | 256 | 784 | 1274 | 144 | 1047 | 199 | 1390 | 302 | 430 | 112 | 844 | 5317 |
| Grand Total | 1331 | 2010 | 307 | 3648 | 439 | 515 | 1504 | 2458 | 285 | 2070 | 363 | 2718 | 613 | 793 | 242 | 1648 | 10472 |
| Apprch % | 36.5 | 55.1 | 8.4 | | 17.9 | 21 | 61.2 | | 10.5 | 76.2 | 13.4 | | 37.2 | 48.1 | 14.7 | | |
| Total % | 12.7 | 19.2 | 2.9 | 34.8 | 4.2 | 4.9 | 14.4 | 23.5 | 2.7 | 19.8 | 3.5 | 26 | 5.9 | 7.6 | 2.3 | 15.7 | |

| | Sierra Avenue Southbound | | | | Slover Avenue Westbound | | | | Sierra Avenue Northbound | | | | Slover Avenue Eastbound | | | | |
|---|---|---|---|---|---|---|---|---|---|---|---|---|---|---|---|---|---|
| Start Time | Left | Thru | Right | App. Total | Left | Thru | Right | App. Total | Left | Thru | Right | App. Total | Left | Thru | Right | App. Total | Int. Total |
| Peak Hour Analysis From 04:00 PM to 05:45 PM - Peak 1 of 1 | | | | | | | | | | | | | | | | | |
| Peak Hour for Entire Intersection Begins at 05:00 PM | | | | | | | | | | | | | | | | | |
| 05:00 PM | 155 | 232 | 31 | 418 | **83** | **78** | **236** | **397** | 23 | 246 | 51 | 320 | **86** | **118** | 28 | **232** | **1367** |
| 05:15 PM | 166 | **280** | 34 | **480** | 51 | 51 | 191 | 293 | 42 | 268 | 45 | 355 | 65 | 112 | 27 | 204 | 1332 |
| 05:30 PM | **179** | 255 | **44** | 478 | 51 | 67 | 178 | 296 | 25 | 257 | 48 | 330 | 84 | 99 | 26 | 209 | 1313 |
| 05:45 PM | 168 | 234 | 31 | 433 | 49 | 60 | 179 | 288 | **54** | **276** | **55** | **385** | 67 | 101 | **31** | 199 | 1305 |
| Total Volume | 668 | 1001 | 140 | 1809 | 234 | 256 | 784 | 1274 | 144 | 1047 | 199 | 1390 | 302 | 430 | 112 | 844 | 5317 |
| % App. Total | 36.9 | 55.3 | 7.7 | | 18.4 | 20.1 | 61.5 | | 10.4 | 75.3 | 14.3 | | 35.8 | 50.9 | 13.3 | | |
| PHF | .933 | .894 | .795 | .942 | .705 | .821 | .831 | .802 | .667 | .948 | .905 | .903 | .878 | .911 | .903 | .909 | .972 |

Counts Unlimited
PO Box 1178
Corona, CA 92878
(951) 268-6268

City of Jurupa Valley
N/S: Sierra Avenue
E/W: Slover Avenue
Weather: Clear

File Name : JVYSISLPM
Site Code : 06715550
Start Date : 10/7/2015
Page No : 2

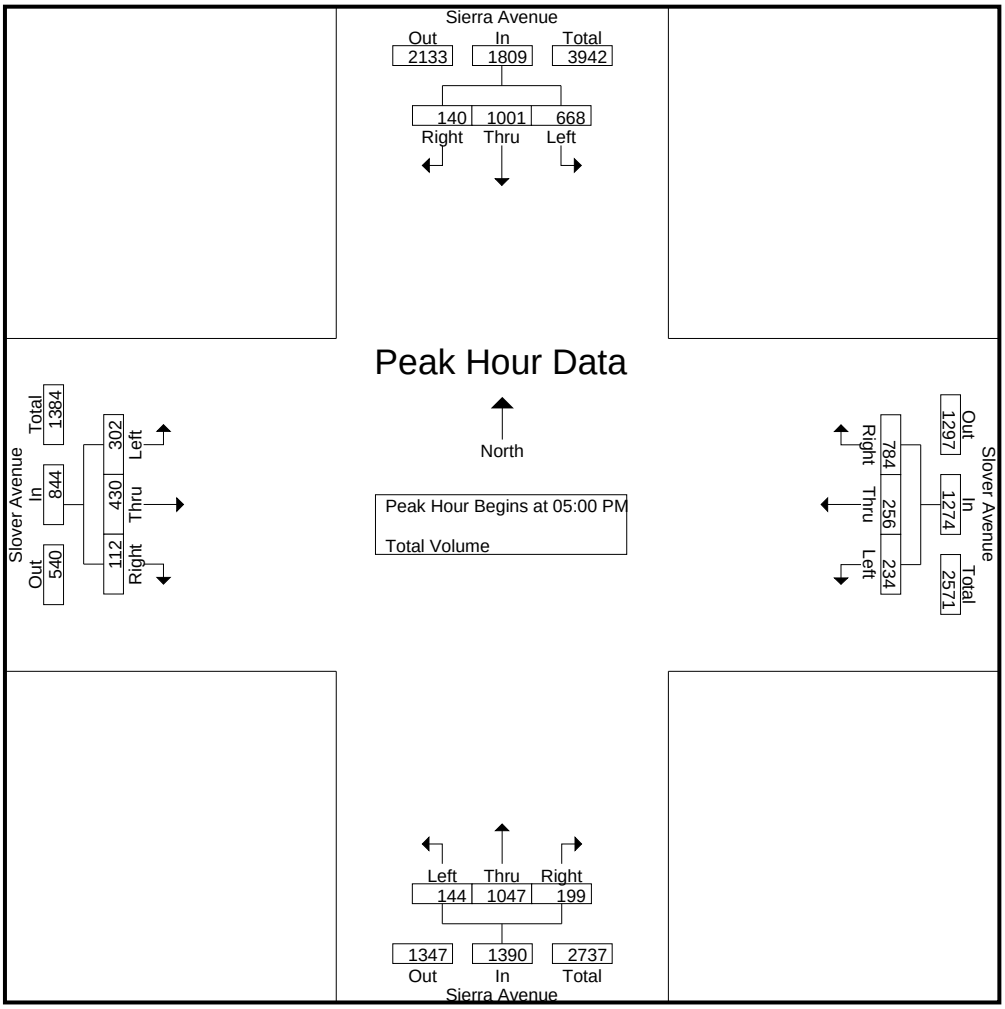


Peak Hour Analysis From 04:00 PM to 05:45 PM - Peak 1 of 1
Peak Hour for Each Approach Begins at:

| | 04:00 PM | | | | 05:00 PM | | | | 05:00 PM | | | | 04:45 PM | | | |
|---|---|---|---|---|---|---|---|---|---|---|---|---|---|---|---|---|
| +0 mins. | 156 | 255 | 45 | 456 | **83** | **78** | **236** | **397** | 23 | 246 | 51 | 320 | **87** | 98 | **30** | 215 |
| +15 mins. | 164 | **258** | 29 | 451 | 51 | 51 | 191 | 293 | 42 | 268 | 45 | 355 | 86 | **118** | 28 | **232** |
| +30 mins. | **177** | 241 | **56** | **474** | 51 | 67 | 178 | 296 | 25 | 257 | 48 | 330 | 65 | 112 | 27 | 204 |
| +45 mins. | 166 | 255 | 37 | 458 | 49 | 60 | 179 | 288 | **54** | **276** | **55** | **385** | 84 | 99 | 26 | 209 |
| Total Volume | 663 | 1009 | 167 | 1839 | 234 | 256 | 784 | 1274 | 144 | 1047 | 199 | 1390 | 322 | 427 | 111 | 860 |
| % App. Total | 36.1 | 54.9 | 9.1 | | 18.4 | 20.1 | 61.5 | | 10.4 | 75.3 | 14.3 | | 37.4 | 49.7 | 12.9 | |
| PHF | .936 | .978 | .746 | .970 | .705 | .821 | .831 | .802 | .667 | .948 | .905 | .903 | .925 | .905 | .925 | .927 |

Counts Unlimited, Inc.
PO Box 1178
Corona, CA 92878
(951) 268-6268

City of Fontana
N/S: Palmetto Avenue
E/W: Valley Boulevard
Weather: Clear

File Name : FONPAVAAM
Site Code : 06714097
Start Date : 3/11/2014
Page No : 1

Groups Printed- Total Volume

| | Palmetto Avenue Southbound | | | Valley Boulevard Westbound | | | Valley Boulevard Eastbound | | | |
|---|---|---|---|---|---|---|---|---|---|---|
| Start Time | Left | Right | App. Total | Thru | Right | App. Total | Left | Thru | App. Total | Int. Total |
| 07:00 AM | 5 | 90 | 95 | 148 | 8 | 156 | 18 | 59 | 77 | 328 |
| 07:15 AM | 10 | 68 | 78 | 127 | 11 | 138 | 34 | 114 | 148 | 364 |
| 07:30 AM | 7 | 57 | 64 | 140 | 10 | 150 | 46 | 102 | 148 | 362 |
| 07:45 AM | 9 | 47 | 56 | 113 | 4 | 117 | 39 | 83 | 122 | 295 |
| Total | 31 | 262 | 293 | 528 | 33 | 561 | 137 | 358 | 495 | 1349 |
| 08:00 AM | 6 | 49 | 55 | 126 | 7 | 133 | 22 | 74 | 96 | 284 |
| 08:15 AM | 14 | 48 | 62 | 108 | 15 | 123 | 25 | 56 | 81 | 266 |
| 08:30 AM | 15 | 30 | 45 | 100 | 7 | 107 | 22 | 77 | 99 | 251 |
| 08:45 AM | 10 | 45 | 55 | 96 | 9 | 105 | 19 | 87 | 106 | 266 |
| Total | 45 | 172 | 217 | 430 | 38 | 468 | 88 | 294 | 382 | 1067 |
| Grand Total | 76 | 434 | 510 | 958 | 71 | 1029 | 225 | 652 | 877 | 2416 |
| Apprch % | 14.9 | 85.1 | | 93.1 | 6.9 | | 25.7 | 74.3 | | |
| Total % | 3.1 | 18 | 21.1 | 39.7 | 2.9 | 42.6 | 9.3 | 27 | 36.3 | |

| | Palmetto Avenue Southbound | | | Valley Boulevard Westbound | | | Valley Boulevard Eastbound | | | |
|---|---|---|---|---|---|---|---|---|---|---|
| Start Time | Left | Right | App. Total | Thru | Right | App. Total | Left | Thru | App. Total | Int. Total |
| Peak Hour Analysis From 07:00 AM to 08:45 AM - Peak 1 of 1 | | | | | | | | | | |
| Peak Hour for Entire Intersection Begins at 07:00 AM | | | | | | | | | | |
| 07:00 AM | 5 | **90** | **95** | **148** | 8 | **156** | 18 | 59 | 77 | 328 |
| 07:15 AM | **10** | 68 | 78 | 127 | **11** | 138 | 34 | **114** | **148** | **364** |
| 07:30 AM | 7 | 57 | 64 | 140 | 10 | 150 | **46** | 102 | 148 | 362 |
| 07:45 AM | 9 | 47 | 56 | 113 | 4 | 117 | 39 | 83 | 122 | 295 |
| Total Volume | 31 | 262 | 293 | 528 | 33 | 561 | 137 | 358 | 495 | 1349 |
| % App. Total | 10.6 | 89.4 | | 94.1 | 5.9 | | 27.7 | 72.3 | | |
| PHF | .775 | .728 | .771 | .892 | .750 | .899 | .745 | .785 | .836 | .927 |

Counts Unlimited, Inc.
PO Box 1178
Corona, CA 92878
(951) 268-6268

City of Fontana
N/S: Palmetto Avenue
E/W: Valley Boulevard
Weather: Clear

File Name : FONPAVAAM
Site Code : 06714097
Start Date : 3/11/2014
Page No : 2

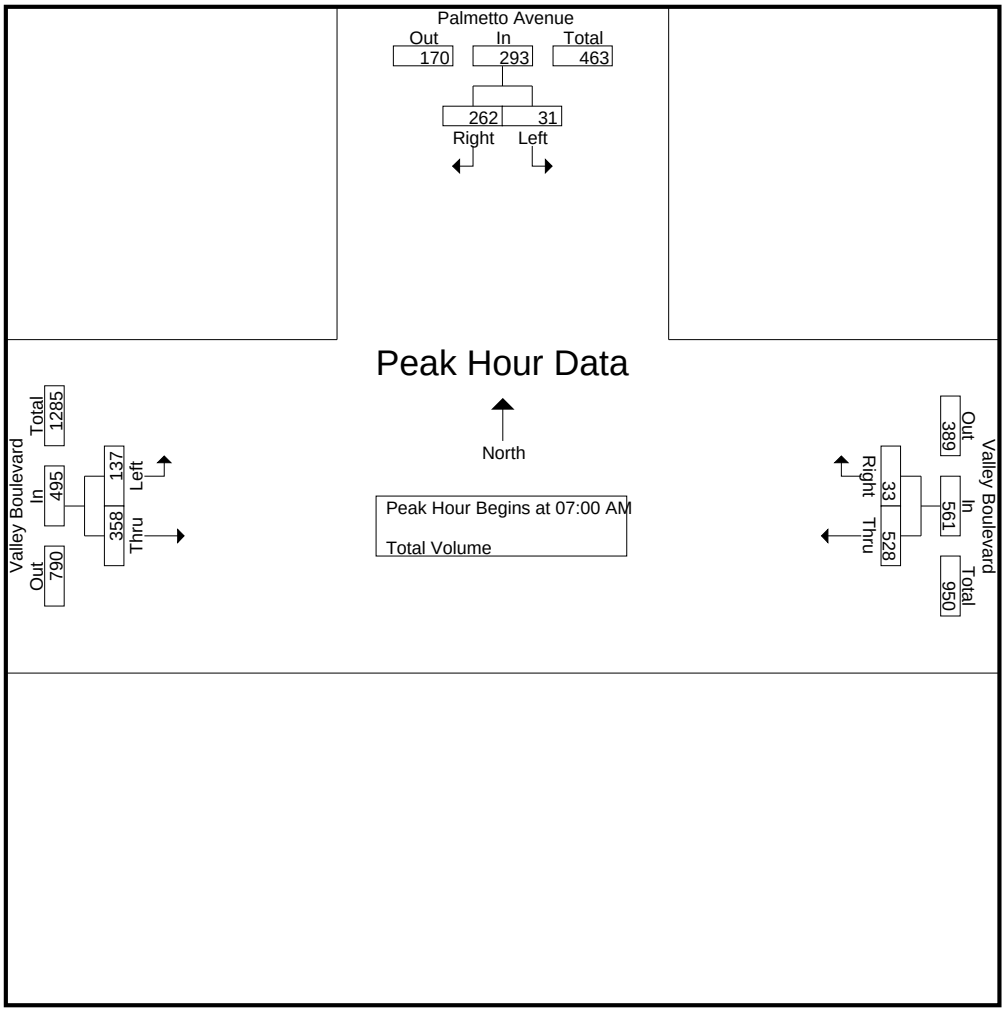


Peak Hour Analysis From 07:00 AM to 08:45 AM - Peak 1 of 1

Peak Hour for Each Approach Begins at:

| | 07:00 AM | | | 07:00 AM | | | 07:15 AM | | |
|---|---|---|---|---|---|---|---|---|---|
| +0 mins. | 5 | **90** | **95** | **148** | 8 | **156** | 34 | **114** | **148** |
| +15 mins. | **10** | 68 | 78 | 127 | **11** | 138 | **46** | 102 | 148 |
| +30 mins. | 7 | 57 | 64 | 140 | 10 | 150 | 39 | 83 | 122 |
| +45 mins. | 9 | 47 | 56 | 113 | 4 | 117 | 22 | 74 | 96 |
| Total Volume | 31 | 262 | 293 | 528 | 33 | 561 | 141 | 373 | 514 |
| % App. Total | 10.6 | 89.4 | | 94.1 | 5.9 | | 27.4 | 72.6 | |
| PHF | .775 | .728 | .771 | .892 | .750 | .899 | .766 | .818 | .868 |

Counts Unlimited, Inc.
PO Box 1178
Corona, CA 92878
(951) 268-6268

City of Fontana
N/S: Palmetto Avenue
E/W: Valley Boulevard
Weather: Clear

File Name : FONPAVAPM
Site Code : 06714097
Start Date : 3/11/2014
Page No : 1

Groups Printed- Total Volume

| | Palmetto Avenue Southbound | | | Valley Boulevard Westbound | | | Valley Boulevard Eastbound | | | |
|---|---|---|---|---|---|---|---|---|---|---|
| Start Time | Left | Right | App. Total | Thru | Right | App. Total | Left | Thru | App. Total | Int. Total |
| 04:00 PM | 16 | 45 | 61 | 95 | 14 | 109 | 66 | 254 | 320 | 490 |
| 04:15 PM | 13 | 49 | 62 | 112 | 17 | 129 | 80 | 220 | 300 | 491 |
| 04:30 PM | 17 | 47 | 64 | 123 | 20 | 143 | 82 | 280 | 362 | 569 |
| 04:45 PM | 17 | 37 | 54 | 135 | 14 | 149 | 86 | 247 | 333 | 536 |
| Total | 63 | 178 | 241 | 465 | 65 | 530 | 314 | 1001 | 1315 | 2086 |
| 05:00 PM | 11 | 36 | 47 | 140 | 16 | 156 | 84 | 285 | 369 | 572 |
| 05:15 PM | 17 | 43 | 60 | 92 | 8 | 100 | 81 | 256 | 337 | 497 |
| 05:30 PM | 14 | 38 | 52 | 135 | 24 | 159 | 72 | 257 | 329 | 540 |
| 05:45 PM | 21 | 39 | 60 | 193 | 22 | 215 | 82 | 239 | 321 | 596 |
| Total | 63 | 156 | 219 | 560 | 70 | 630 | 319 | 1037 | 1356 | 2205 |
| Grand Total | 126 | 334 | 460 | 1025 | 135 | 1160 | 633 | 2038 | 2671 | 4291 |
| Apprch % | 27.4 | 72.6 | | 88.4 | 11.6 | | 23.7 | 76.3 | | |
| Total % | 2.9 | 7.8 | 10.7 | 23.9 | 3.1 | 27 | 14.8 | 47.5 | 62.2 | |

| | Palmetto Avenue Southbound | | | Valley Boulevard Westbound | | | Valley Boulevard Eastbound | | | |
|---|---|---|---|---|---|---|---|---|---|---|
| Start Time | Left | Right | App. Total | Thru | Right | App. Total | Left | Thru | App. Total | Int. Total |
| Peak Hour Analysis From 04:00 PM to 05:45 PM - Peak 1 of 1 | | | | | | | | | | |
| Peak Hour for Entire Intersection Begins at 05:00 PM | | | | | | | | | | |
| 05:00 PM | 11 | 36 | 47 | 140 | 16 | 156 | **84** | **285** | **369** | 572 |
| 05:15 PM | 17 | **43** | **60** | 92 | 8 | 100 | 81 | 256 | 337 | 497 |
| 05:30 PM | 14 | 38 | 52 | 135 | **24** | 159 | 72 | 257 | 329 | 540 |
| 05:45 PM | **21** | 39 | 60 | **193** | 22 | **215** | 82 | 239 | 321 | **596** |
| Total Volume | 63 | 156 | 219 | 560 | 70 | 630 | 319 | 1037 | 1356 | 2205 |
| % App. Total | 28.8 | 71.2 | | 88.9 | 11.1 | | 23.5 | 76.5 | | |
| PHF | .750 | .907 | .913 | .725 | .729 | .733 | .949 | .910 | .919 | .925 |

Counts Unlimited, Inc.
PO Box 1178
Corona, CA 92878
(951) 268-6268

City of Fontana
N/S: Palmetto Avenue
E/W: Valley Boulevard
Weather: Clear

File Name : FONPAVAPM
Site Code : 06714097
Start Date : 3/11/2014
Page No : 2

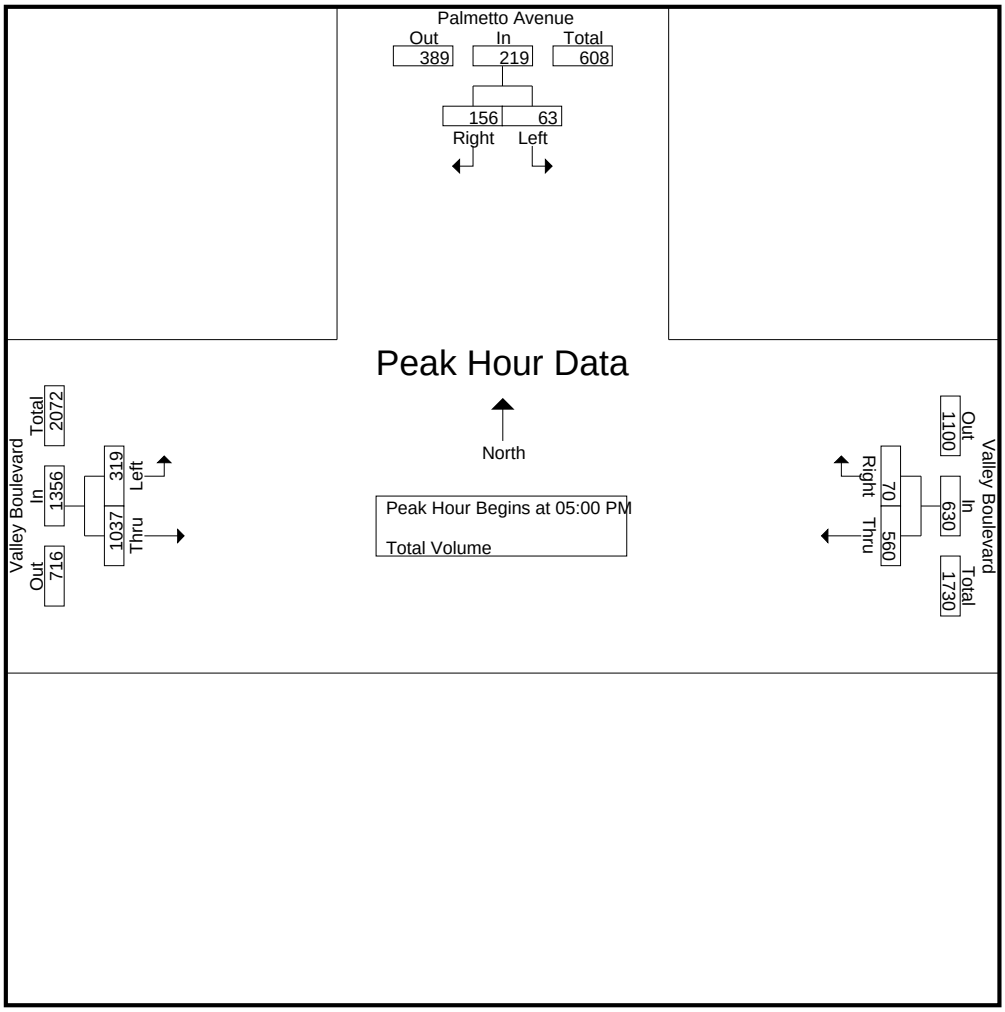


Peak Hour Analysis From 04:00 PM to 05:45 PM - Peak 1 of 1

Peak Hour for Each Approach Begins at:

| | 04:00 PM | | | 05:00 PM | | | 04:30 PM | | |
|---|---|---|---|---|---|---|---|---|---|
| +0 mins. | 16 | 45 | 61 | 140 | 16 | 156 | 82 | 280 | 362 |
| +15 mins. | 13 | **49** | 62 | 92 | 8 | 100 | **86** | 247 | 333 |
| +30 mins. | **17** | 47 | **64** | 135 | **24** | 159 | 84 | **285** | **369** |
| +45 mins. | 17 | 37 | 54 | **193** | 22 | **215** | 81 | 256 | 337 |
| Total Volume | 63 | 178 | 241 | 560 | 70 | 630 | 333 | 1068 | 1401 |
| % App. Total | 26.1 | 73.9 | | 88.9 | 11.1 | | 23.8 | 76.2 | |
| PHF | .926 | .908 | .941 | .725 | .729 | .733 | .968 | .937 | .949 |

Counts Unlimited Inc.
PO Box 1178
Corona, CA 92878
(951) 268-6268

City of Fontana
N/S: Alder Avenue
E/W: San Bernardino Avenue
Weather: Sunny

File Name : FONALSBAM
Site Code : 00000111
Start Date : 5/30/2012
Page No : 2

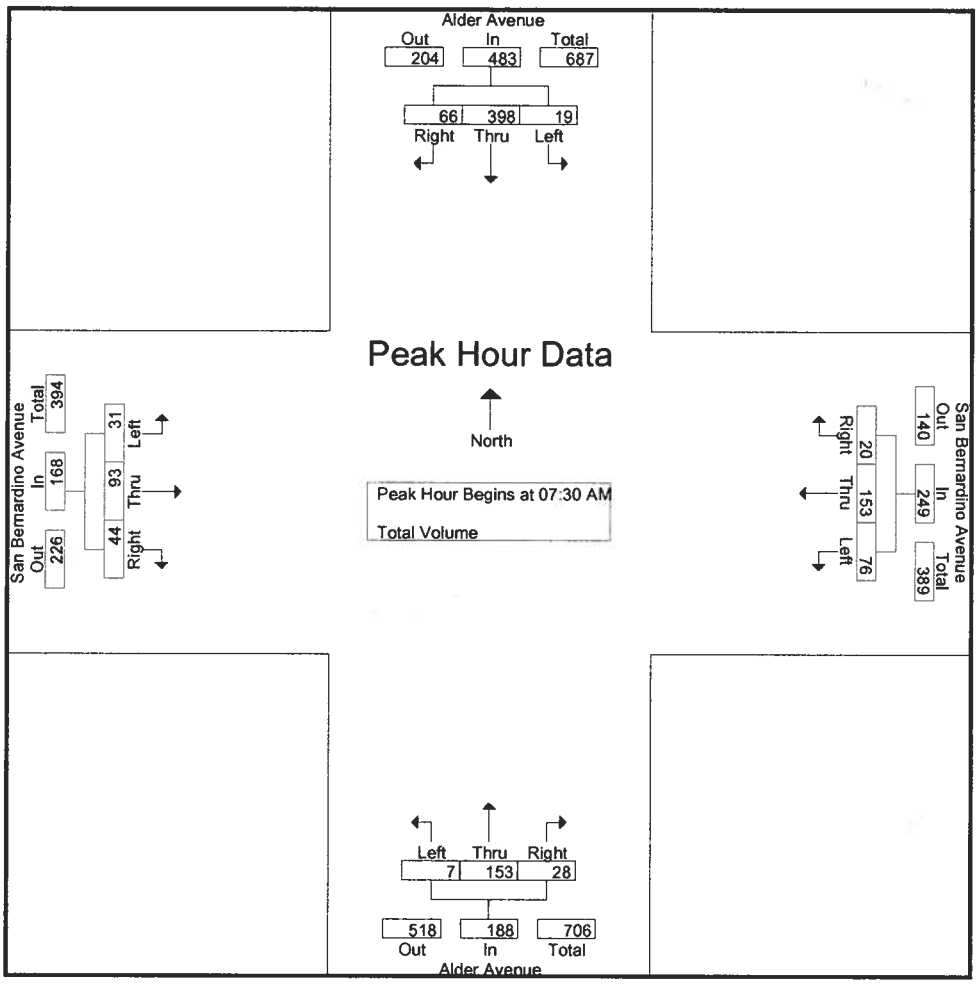


Peak Hour Analysis From 07:00 AM to 08:45 AM - Peak 1 of 1

Peak Hour for Each Approach Begins at:

| | 07:30 AM | | | | 07:15 AM | | | | 07:15 AM | | | | 07:15 AM | | | |
|---|---|---|---|---|---|---|---|---|---|---|---|---|---|---|---|---|
| +0 mins. | **7** | **108** | 16 | **131** | 16 | 27 | 7 | 50 | **4** | **39** | 10 | **53** | 6 | 19 | 7 | 32 |
| +15 mins. | 7 | 94 | 15 | 116 | **32** | **50** | 7 | **89** | 2 | 37 | **13** | 52 | 8 | 26 | 13 | **47** |
| +30 mins. | 5 | 95 | **18** | 118 | 22 | 44 | **10** | **76** | 2 | 39 | 2 | 43 | 4 | **30** | 12 | 46 |
| +45 mins. | 0 | 101 | 17 | 118 | 13 | 28 | 1 | 42 | 2 | 32 | 8 | 42 | **11** | 17 | **15** | 43 |
| Total Volume | 19 | 398 | 66 | 483 | 83 | 149 | 25 | 257 | 10 | 147 | 33 | 190 | 29 | 92 | 47 | 168 |
| % App. Total | 3.9 | 82.4 | 13.7 | | 32.3 | 58 | 9.7 | | 5.3 | 77.4 | 17.4 | | 17.3 | 54.8 | 28 | |
| PHF | .679 | .921 | .917 | .922 | .648 | .745 | .625 | .722 | .625 | .942 | .635 | .896 | .659 | .767 | .783 | .894 |

Counts Unlimited Inc.
PO Box 1178
Corona, CA 92878
(951) 268-6268

City of Fontana
N/S: Alder Avenue
E/W: San Bernardino Avenue
Weather: Sunny

File Name : FONALSBAM
Site Code : 00000111
Start Date : 5/30/2012
Page No : 1

Groups Printed- Total Volume

| | Alder Avenue Southbound | | | | San Bernardino Avenue Westbound | | | | Alder Avenue Northbound | | | | San Bernardino Avenue Eastbound | | | | |
|---|---|---|---|---|---|---|---|---|---|---|---|---|---|---|---|---|---|
| Start Time | Left | Thru | Right | App. Total | Left | Thru | Right | App. Total | Left | Thru | Right | App. Total | Left | Thru | Right | App. Total | Int. Total |
| 07:00 AM | 2 | 74 | 9 | 85 | 10 | 23 | 3 | 36 | 0 | 15 | 5 | 20 | 1 | 13 | 9 | 23 | 164 |
| 07:15 AM | 1 | 75 | 14 | 90 | 16 | 27 | 7 | 50 | 4 | 39 | 10 | 53 | 6 | 19 | 7 | 32 | 225 |
| 07:30 AM | 7 | 108 | 16 | 131 | 32 | 50 | 7 | 89 | 2 | 37 | 13 | 52 | 8 | 26 | 13 | 47 | 319 |
| 07:45 AM | 7 | 94 | 15 | 116 | 22 | 44 | 10 | 76 | 2 | 39 | 2 | 43 | 4 | 30 | 12 | 46 | 281 |
| Total | 17 | 351 | 54 | 422 | 80 | 144 | 27 | 251 | 8 | 130 | 30 | 168 | 19 | 88 | 41 | 148 | 989 |
| 08:00 AM | 5 | 95 | 18 | 118 | 13 | 28 | 1 | 42 | 2 | 32 | 8 | 42 | 11 | 17 | 15 | 43 | 245 |
| 08:15 AM | 0 | 101 | 17 | 118 | 9 | 31 | 2 | 42 | 1 | 45 | 5 | 51 | 8 | 20 | 4 | 32 | 243 |
| 08:30 AM | 2 | 91 | 19 | 112 | 10 | 34 | 6 | 50 | 6 | 29 | 7 | 42 | 7 | 16 | 11 | 34 | 238 |
| 08:45 AM | 1 | 80 | 18 | 99 | 15 | 26 | 10 | 51 | 4 | 38 | 4 | 46 | 10 | 25 | 7 | 42 | 238 |
| Total | 8 | 367 | 72 | 447 | 47 | 119 | 19 | 185 | 13 | 144 | 24 | 181 | 36 | 78 | 37 | 151 | 964 |
| Grand Total | 25 | 718 | 126 | 869 | 127 | 263 | 46 | 436 | 21 | 274 | 54 | 349 | 55 | 166 | 78 | 299 | 1953 |
| Apprch % | 2.9 | 82.6 | 14.5 | | 29.1 | 60.3 | 10.6 | | 6 | 78.5 | 15.5 | | 18.4 | 55.5 | 26.1 | | |
| Total % | 1.3 | 36.8 | 6.5 | 44.5 | 6.5 | 13.5 | 2.4 | 22.3 | 1.1 | 14 | 2.8 | 17.9 | 2.8 | 8.5 | 4 | 15.3 | |

| | Alder Avenue Southbound | | | | San Bernardino Avenue Westbound | | | | Alder Avenue Northbound | | | | San Bernardino Avenue Eastbound | | | | |
|---|---|---|---|---|---|---|---|---|---|---|---|---|---|---|---|---|---|
| Start Time | Left | Thru | Right | App. Total | Left | Thru | Right | App. Total | Left | Thru | Right | App. Total | Left | Thru | Right | App. Total | Int. Total |
| Peak Hour Analysis From 07:00 AM to 08:45 AM - Peak 1 of 1 | | | | | | | | | | | | | | | | | |
| Peak Hour for Entire Intersection Begins at 07:30 AM | | | | | | | | | | | | | | | | | |
| 07:30 AM | **7** | **108** | 16 | **131** | **32** | **50** | 7 | **89** | **2** | 37 | **13** | **52** | 8 | 26 | 13 | **47** | **319** |
| 07:45 AM | 7 | 94 | 15 | 116 | 22 | 44 | **10** | 76 | 2 | 39 | 2 | 43 | 4 | **30** | 12 | 46 | 281 |
| 08:00 AM | 5 | 95 | **18** | 118 | 13 | 28 | 1 | 42 | 2 | 32 | 8 | 42 | **11** | 17 | **15** | 43 | 245 |
| 08:15 AM | 0 | 101 | 17 | 118 | 9 | 31 | 2 | 42 | 1 | **45** | 5 | 51 | 8 | 20 | 4 | 32 | 243 |
| Total Volume | 19 | 398 | 66 | 483 | 76 | 153 | 20 | 249 | 7 | 153 | 28 | 188 | 31 | 93 | 44 | 168 | 1088 |
| % App. Total | 3.9 | 82.4 | 13.7 | | 30.5 | 61.4 | 8 | | 3.7 | 81.4 | 14.9 | | 18.5 | 55.4 | 26.2 | | |
| PHF | .679 | .921 | .917 | .922 | .594 | .765 | .500 | .699 | .875 | .850 | .538 | .904 | .705 | .775 | .733 | .894 | .853 |

Counts Unlimited Inc.
PO Box 1178
Corona, CA 92878
(951) 268-6268

City of Fontana
N/S: Alder Avenue
E/W: San Bernardino Avenue
Weather: Sunny

File Name : FONALSBPM
Site Code : 00000111
Start Date : 5/30/2012
Page No : 2

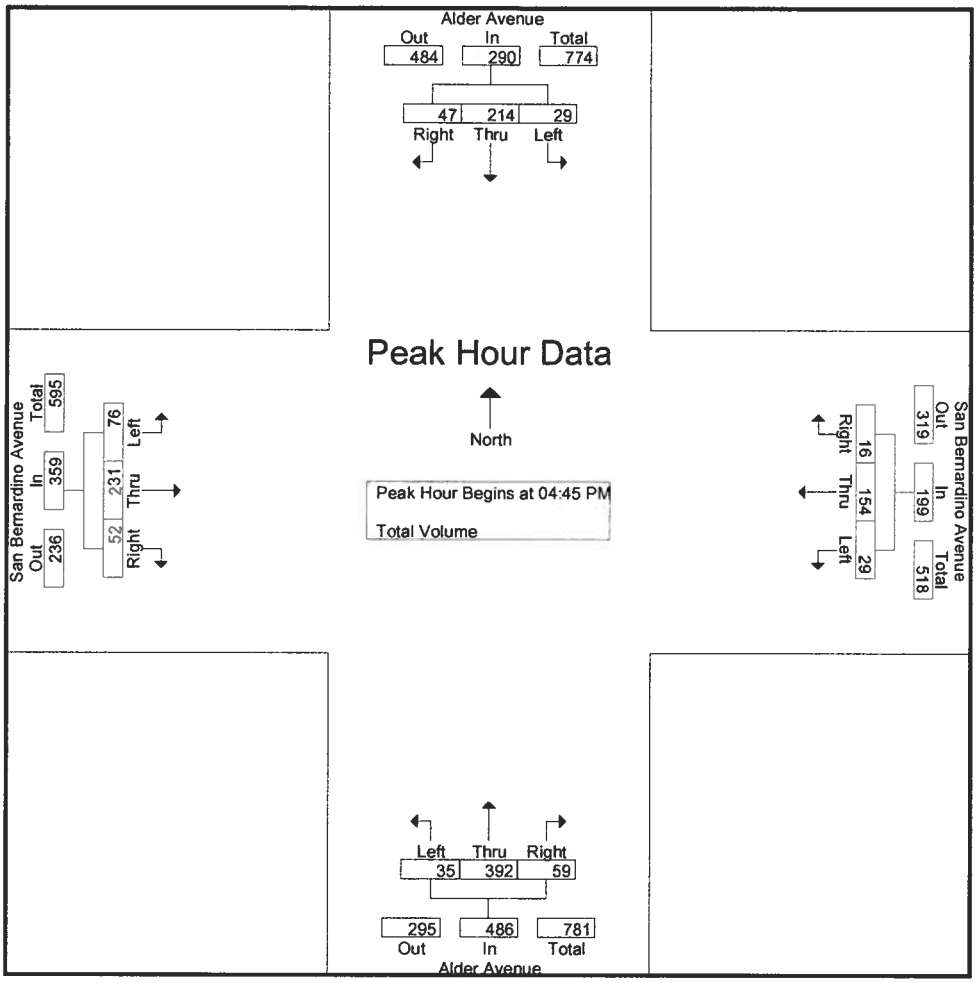


Peak Hour Analysis From 04:00 PM to 05:45 PM - Peak 1 of 1

Peak Hour for Each Approach Begins at:

| | 04:45 PM | | | | 04:30 PM | | | | 04:45 PM | | | | 04:45 PM | | | |
|---|---|---|---|---|---|---|---|---|---|---|---|---|---|---|---|---|
| +0 mins. | 3 | **62** | 11 | **76** | 9 | 34 | **8** | **51** | 6 | 87 | 12 | 105 | **23** | **65** | 11 | **99** |
| +15 mins. | 6 | 47 | **14** | 67 | 7 | **38** | 3 | 48 | 4 | **106** | 12 | 122 | 23 | 59 | **15** | 97 |
| +30 mins. | 8 | 55 | 8 | 71 | 7 | 37 | 5 | 49 | 12 | 104 | **21** | **137** | 20 | 50 | 13 | 83 |
| +45 mins. | **12** | 50 | 14 | 76 | **10** | 36 | 5 | 51 | **13** | 95 | 14 | 122 | 10 | 57 | 13 | 80 |
| Total Volume | 29 | 214 | 47 | 290 | 33 | 145 | 21 | 199 | 35 | 392 | 59 | 486 | 76 | 231 | 52 | 359 |
| % App. Total | 10 | 73.8 | 16.2 | | 16.6 | 72.9 | 10.6 | | 7.2 | 80.7 | 12.1 | | 21.2 | 64.3 | 14.5 | |
| PHF | .604 | .863 | .839 | .954 | .825 | .954 | .656 | .975 | .673 | .925 | .702 | .887 | .826 | .888 | .867 | .907 |

Counts Unlimited Inc.
PO Box 1178
Corona, CA 92878
(951) 268-6268

City of Fontana
N/S: Alder Avenue
E/W: San Bernardino Avenue
Weather: Sunny

File Name : FONALSBPM
Site Code : 00000111
Start Date : 5/30/2012
Page No : 1

Groups Printed- Total Volume

| | Alder Avenue Southbound | | | | San Bernardino Avenue Westbound | | | | Alder Avenue Northbound | | | | San Bernardino Avenue Eastbound | | | | |
|---|---|---|---|---|---|---|---|---|---|---|---|---|---|---|---|---|---|
| Start Time | Left | Thru | Right | App. Total | Left | Thru | Right | App. Total | Left | Thru | Right | App. Total | Left | Thru | Right | App. Total | Int. Total |
| 04:00 PM | 4 | 48 | 11 | 63 | 11 | 32 | 2 | 45 | 9 | 63 | 14 | 86 | 16 | 44 | 14 | 74 | 268 |
| 04:15 PM | 6 | 59 | 12 | 77 | 8 | 33 | 8 | 49 | 8 | 73 | 10 | 91 | 15 | 57 | 10 | 82 | 299 |
| 04:30 PM | 7 | 48 | 9 | 64 | 9 | 34 | 8 | 51 | 9 | 68 | 8 | 85 | 15 | 35 | 12 | 62 | 262 |
| 04:45 PM | 3 | 62 | 11 | 76 | 7 | 38 | 3 | 48 | 6 | 87 | 12 | 105 | 23 | 65 | 11 | 99 | 328 |
| Total | 20 | 217 | 43 | 280 | 35 | 137 | 21 | 193 | 32 | 291 | 44 | 367 | 69 | 201 | 47 | 317 | 1157 |
| 05:00 PM | 6 | 47 | 14 | 67 | 7 | 37 | 5 | 49 | 4 | 106 | 12 | 122 | 23 | 59 | 15 | 97 | 335 |
| 05:15 PM | 8 | 55 | 8 | 71 | 10 | 36 | 5 | 51 | 12 | 104 | 21 | 137 | 20 | 50 | 13 | 83 | 342 |
| 05:30 PM | 12 | 50 | 14 | 76 | 5 | 43 | 3 | 51 | 13 | 95 | 14 | 122 | 10 | 57 | 13 | 80 | 329 |
| 05:45 PM | 9 | 41 | 11 | 61 | 5 | 27 | 5 | 37 | 11 | 73 | 8 | 92 | 22 | 51 | 10 | 83 | 273 |
| Total | 35 | 193 | 47 | 275 | 27 | 143 | 18 | 188 | 40 | 378 | 55 | 473 | 75 | 217 | 51 | 343 | 1279 |
| Grand Total | 55 | 410 | 90 | 555 | 62 | 280 | 39 | 381 | 72 | 669 | 99 | 840 | 144 | 418 | 98 | 660 | 2436 |
| Apprch % | 9.9 | 73.9 | 16.2 | | 16.3 | 73.5 | 10.2 | | 8.6 | 79.6 | 11.8 | | 21.8 | 63.3 | 14.8 | | |
| Total % | 2.3 | 16.8 | 3.7 | 22.8 | 2.5 | 11.5 | 1.6 | 15.6 | 3 | 27.5 | 4.1 | 34.5 | 5.9 | 17.2 | 4 | 27.1 | |

| | Alder Avenue Southbound | | | | San Bernardino Avenue Westbound | | | | Alder Avenue Northbound | | | | San Bernardino Avenue Eastbound | | | | |
|---|---|---|---|---|---|---|---|---|---|---|---|---|---|---|---|---|---|
| Start Time | Left | Thru | Right | App. Total | Left | Thru | Right | App. Total | Left | Thru | Right | App. Total | Left | Thru | Right | App. Total | Int. Total |
| Peak Hour Analysis From 04:00 PM to 05:45 PM - Peak 1 of 1 | | | | | | | | | | | | | | | | | |
| Peak Hour for Entire Intersection Begins at 04:45 PM | | | | | | | | | | | | | | | | | |
| 04:45 PM | 3 | **62** | 11 | **76** | 7 | 38 | 3 | 48 | 6 | 87 | 12 | 105 | **23** | **65** | 11 | **99** | 328 |
| 05:00 PM | 6 | 47 | **14** | 67 | 7 | 37 | **5** | 49 | 4 | **106** | 12 | 122 | 23 | 59 | **15** | 97 | 335 |
| 05:15 PM | 8 | 55 | 8 | 71 | **10** | 36 | 5 | **51** | 12 | 104 | **21** | **137** | 20 | 50 | 13 | 83 | **342** |
| 05:30 PM | **12** | 50 | 14 | 76 | 5 | **43** | 3 | 51 | **13** | 95 | 14 | 122 | 10 | 57 | 13 | 80 | 329 |
| Total Volume | 29 | 214 | 47 | 290 | 29 | 154 | 16 | 199 | 35 | 392 | 59 | 486 | 76 | 231 | 52 | 359 | 1334 |
| % App. Total | 10 | 73.8 | 16.2 | | 14.6 | 77.4 | 8 | | 7.2 | 80.7 | 12.1 | | 21.2 | 64.3 | 14.5 | | |
| PHF | .604 | .863 | .839 | .954 | .725 | .895 | .800 | .975 | .673 | .925 | .702 | .887 | .826 | .888 | .867 | .907 | .975 |

Counts Unlimited, Inc.
PO Box 1178
Corona, CA 92878
(951) 268-6268

County of San Bernardino
N/S: Alder Avenue
E/W: Marygold Avenue
Weather: Clear

File Name : CSBALMAAM
Site Code : 06714097
Start Date : 3/11/2014
Page No : 1

Groups Printed- Total Volume

| | Alder Avenue Southbound | | | | Marygold Avenue Westbound | | | | Alder Avenue Northbound | | | | Marygold Avenue Eastbound | | | | |
|---|---|---|---|---|---|---|---|---|---|---|---|---|---|---|---|---|---|
| Start Time | Left | Thru | Right | App. Total | Left | Thru | Right | App. Total | Left | Thru | Right | App. Total | Left | Thru | Right | App. Total | Int. Total |
| 07:00 AM | 9 | 70 | 35 | 114 | 2 | 18 | 3 | 23 | 0 | 37 | 2 | 39 | 3 | 5 | 5 | 13 | 189 |
| 07:15 AM | 6 | 68 | 30 | 104 | 3 | 19 | 7 | 29 | 1 | 49 | 6 | 56 | 15 | 12 | 2 | 29 | 218 |
| 07:30 AM | 12 | 62 | 31 | 105 | 2 | 27 | 1 | 30 | 2 | 66 | 4 | 72 | 12 | 13 | 4 | 29 | 236 |
| 07:45 AM | 9 | 60 | 29 | 98 | 4 | 35 | 5 | 44 | 4 | 43 | 3 | 50 | 8 | 8 | 3 | 19 | 211 |
| Total | 36 | 260 | 125 | 421 | 11 | 99 | 16 | 126 | 7 | 195 | 15 | 217 | 38 | 38 | 14 | 90 | 854 |
| | | | | | | | | | | | | | | | | | |
| 08:00 AM | 13 | 65 | 33 | 111 | 2 | 21 | 4 | 27 | 4 | 37 | 2 | 43 | 6 | 12 | 6 | 24 | 205 |
| 08:15 AM | 4 | 50 | 24 | 78 | 3 | 21 | 8 | 32 | 3 | 43 | 3 | 49 | 6 | 15 | 5 | 26 | 185 |
| 08:30 AM | 7 | 45 | 25 | 77 | 0 | 21 | 0 | 21 | 3 | 32 | 4 | 39 | 8 | 17 | 0 | 25 | 162 |
| 08:45 AM | 11 | 49 | 23 | 83 | 2 | 22 | 6 | 30 | 2 | 34 | 5 | 41 | 9 | 27 | 5 | 41 | 195 |
| Total | 35 | 209 | 105 | 349 | 7 | 85 | 18 | 110 | 12 | 146 | 14 | 172 | 29 | 71 | 16 | 116 | 747 |
| | | | | | | | | | | | | | | | | | |
| Grand Total | 71 | 469 | 230 | 770 | 18 | 184 | 34 | 236 | 19 | 341 | 29 | 389 | 67 | 109 | 30 | 206 | 1601 |
| Apprch % | 9.2 | 60.9 | 29.9 | | 7.6 | 78 | 14.4 | | 4.9 | 87.7 | 7.5 | | 32.5 | 52.9 | 14.6 | | |
| Total % | 4.4 | 29.3 | 14.4 | 48.1 | 1.1 | 11.5 | 2.1 | 14.7 | 1.2 | 21.3 | 1.8 | 24.3 | 4.2 | 6.8 | 1.9 | 12.9 | |

| | Alder Avenue Southbound | | | | Marygold Avenue Westbound | | | | Alder Avenue Northbound | | | | Marygold Avenue Eastbound | | | | |
|---|---|---|---|---|---|---|---|---|---|---|---|---|---|---|---|---|---|
| Start Time | Left | Thru | Right | App. Total | Left | Thru | Right | App. Total | Left | Thru | Right | App. Total | Left | Thru | Right | App. Total | Int. Total |
| Peak Hour Analysis From 07:00 AM to 08:45 AM - Peak 1 of 1 | | | | | | | | | | | | | | | | | |
| Peak Hour for Entire Intersection Begins at 07:15 AM | | | | | | | | | | | | | | | | | |
| 07:15 AM | 6 | **68** | 30 | 104 | 3 | 19 | **7** | 29 | 1 | 49 | **6** | 56 | **15** | 12 | 2 | **29** | 218 |
| 07:30 AM | 12 | 62 | 31 | 105 | 2 | 27 | 1 | 30 | 2 | **66** | 4 | **72** | 12 | **13** | 4 | 29 | **236** |
| 07:45 AM | 9 | 60 | 29 | 98 | **4** | **35** | 5 | **44** | **4** | 43 | 3 | 50 | 8 | 8 | 3 | 19 | 211 |
| 08:00 AM | **13** | 65 | **33** | **111** | 2 | 21 | 4 | 27 | 4 | 37 | 2 | 43 | 6 | 12 | **6** | 24 | 205 |
| Total Volume | 40 | 255 | 123 | 418 | 11 | 102 | 17 | 130 | 11 | 195 | 15 | 221 | 41 | 45 | 15 | 101 | 870 |
| % App. Total | 9.6 | 61 | 29.4 | | 8.5 | 78.5 | 13.1 | | 5 | 88.2 | 6.8 | | 40.6 | 44.6 | 14.9 | | |
| PHF | .769 | .938 | .932 | .941 | .688 | .729 | .607 | .739 | .688 | .739 | .625 | .767 | .683 | .865 | .625 | .871 | .922 |

Counts Unlimited, Inc.
PO Box 1178
Corona, CA 92878
(951) 268-6268

County of San Bernardino
N/S: Alder Avenue
E/W: Marygold Avenue
Weather: Clear

File Name : CSBALMAAM
Site Code : 06714097
Start Date : 3/11/2014
Page No : 2

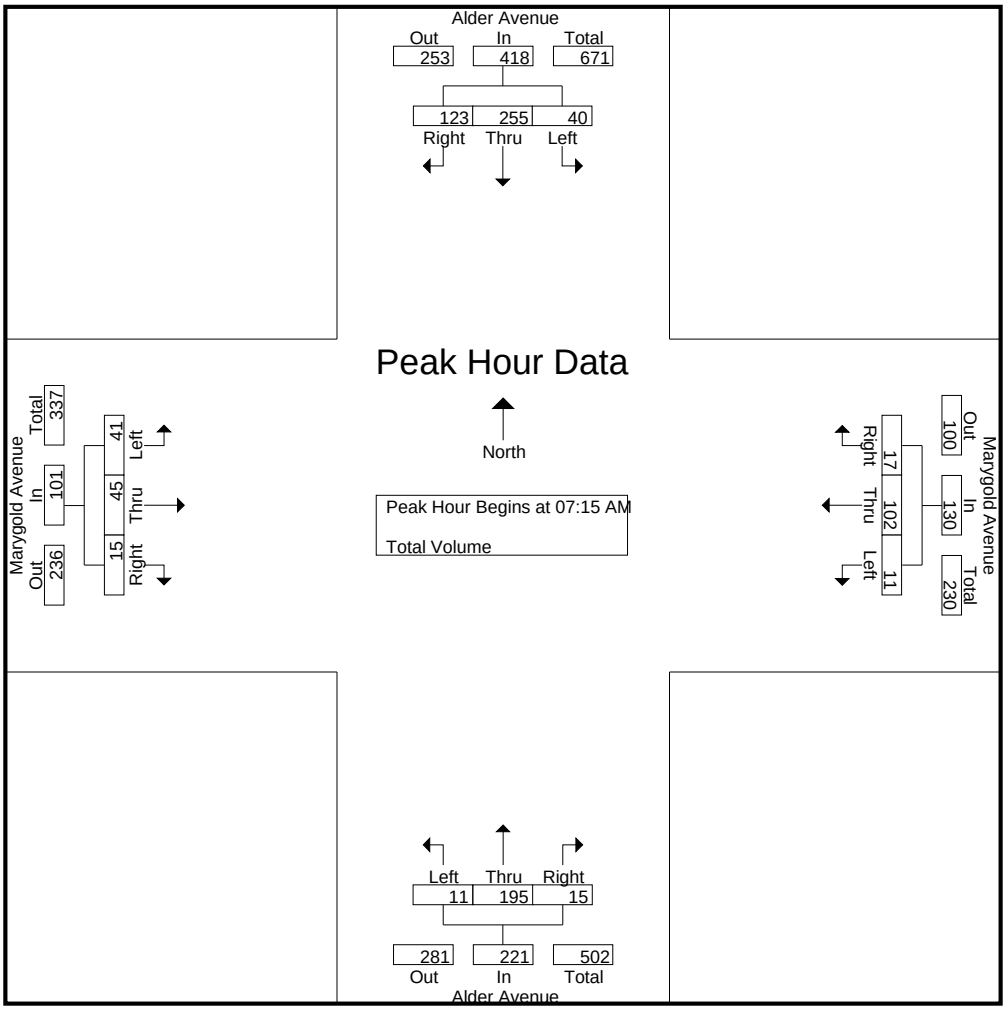


Peak Hour Analysis From 07:00 AM to 08:45 AM - Peak 1 of 1

Peak Hour for Each Approach Begins at:

| | 07:00 AM | | | | 07:30 AM | | | | 07:15 AM | | | | 08:00 AM | | | |
|---|---|---|---|---|---|---|---|---|---|---|---|---|---|---|---|---|
| +0 mins. | 9 | **70** | **35** | **114** | 2 | 27 | 1 | 30 | 1 | 49 | **6** | 56 | 6 | 12 | **6** | 24 |
| +15 mins. | 6 | 68 | 30 | 104 | **4** | **35** | 5 | **44** | 2 | **66** | 4 | **72** | 6 | 15 | 5 | 26 |
| +30 mins. | **12** | 62 | 31 | 105 | 2 | 21 | 4 | 27 | **4** | 43 | 3 | 50 | 8 | 17 | 0 | 25 |
| +45 mins. | 9 | 60 | 29 | 98 | 3 | 21 | **8** | 32 | 4 | 37 | 2 | 43 | **9** | **27** | 5 | **41** |
| Total Volume | 36 | 260 | 125 | 421 | 11 | 104 | 18 | 133 | 11 | 195 | 15 | 221 | 29 | 71 | 16 | 116 |
| % App. Total | 8.6 | 61.8 | 29.7 | | 8.3 | 78.2 | 13.5 | | 5 | 88.2 | 6.8 | | 25 | 61.2 | 13.8 | |
| PHF | .750 | .929 | .893 | .923 | .688 | .743 | .563 | .756 | .688 | .739 | .625 | .767 | .806 | .657 | .667 | .707 |

Counts Unlimited, Inc.
PO Box 1178
Corona, CA 92878
(951) 268-6268

County of San Bernardino
N/S: Alder Avenue
E/W: Marygold Avenue
Weather: Clear

File Name : CSBALMAPM
Site Code : 06714097
Start Date : 3/11/2014
Page No : 1

Groups Printed- Total Volume

| | Alder Avenue Southbound | | | | Marygold Avenue Westbound | | | | Alder Avenue Northbound | | | | Marygold Avenue Eastbound | | | | |
|---|---|---|---|---|---|---|---|---|---|---|---|---|---|---|---|---|---|
| Start Time | Left | Thru | Right | App. Total | Left | Thru | Right | App. Total | Left | Thru | Right | App. Total | Left | Thru | Right | App. Total | Int. Total |
| 04:00 PM | 12 | 61 | 14 | 87 | 1 | 20 | 6 | 27 | 11 | 78 | 5 | 94 | 14 | 31 | 7 | 52 | 260 |
| 04:15 PM | 14 | 52 | 25 | 91 | 3 | 18 | 6 | 27 | 8 | 94 | 12 | 114 | 30 | 29 | 8 | 67 | 299 |
| 04:30 PM | 8 | 58 | 16 | 82 | 2 | 16 | 6 | 24 | 3 | 89 | 5 | 97 | 30 | 35 | 4 | 69 | 272 |
| 04:45 PM | 10 | 62 | 17 | 89 | 4 | 24 | 2 | 30 | 6 | 89 | 6 | 101 | 31 | 30 | 5 | 66 | 286 |
| Total | 44 | 233 | 72 | 349 | 10 | 78 | 20 | 108 | 28 | 350 | 28 | 406 | 105 | 125 | 24 | 254 | 1117 |
| 05:00 PM | 10 | 70 | 16 | 96 | 5 | 18 | 8 | 31 | 11 | 95 | 9 | 115 | 43 | 33 | 3 | 79 | 321 |
| 05:15 PM | 13 | 52 | 26 | 91 | 4 | 15 | 4 | 23 | 7 | 89 | 11 | 107 | 28 | 17 | 5 | 50 | 271 |
| 05:30 PM | 21 | 55 | 12 | 88 | 3 | 17 | 4 | 24 | 7 | 94 | 7 | 108 | 19 | 22 | 3 | 44 | 264 |
| 05:45 PM | 12 | 38 | 16 | 66 | 3 | 9 | 8 | 20 | 4 | 85 | 10 | 99 | 36 | 25 | 4 | 65 | 250 |
| Total | 56 | 215 | 70 | 341 | 15 | 59 | 24 | 98 | 29 | 363 | 37 | 429 | 126 | 97 | 15 | 238 | 1106 |
| Grand Total | 100 | 448 | 142 | 690 | 25 | 137 | 44 | 206 | 57 | 713 | 65 | 835 | 231 | 222 | 39 | 492 | 2223 |
| Apprch % | 14.5 | 64.9 | 20.6 | | 12.1 | 66.5 | 21.4 | | 6.8 | 85.4 | 7.8 | | 47 | 45.1 | 7.9 | | |
| Total % | 4.5 | 20.2 | 6.4 | 31 | 1.1 | 6.2 | 2 | 9.3 | 2.6 | 32.1 | 2.9 | 37.6 | 10.4 | 10 | 1.8 | 22.1 | |

| | Alder Avenue Southbound | | | | Marygold Avenue Westbound | | | | Alder Avenue Northbound | | | | Marygold Avenue Eastbound | | | | |
|---|---|---|---|---|---|---|---|---|---|---|---|---|---|---|---|---|---|
| Start Time | Left | Thru | Right | App. Total | Left | Thru | Right | App. Total | Left | Thru | Right | App. Total | Left | Thru | Right | App. Total | Int. Total |
| Peak Hour Analysis From 04:00 PM to 05:45 PM - Peak 1 of 1 | | | | | | | | | | | | | | | | | |
| Peak Hour for Entire Intersection Begins at 04:15 PM | | | | | | | | | | | | | | | | | |
| 04:15 PM | **14** | 52 | **25** | 91 | 3 | 18 | 6 | 27 | 8 | 94 | **12** | 114 | 30 | 29 | **8** | 67 | 299 |
| 04:30 PM | 8 | 58 | 16 | 82 | 2 | 16 | 6 | 24 | 3 | 89 | 5 | 97 | 30 | **35** | 4 | 69 | 272 |
| 04:45 PM | 10 | 62 | 17 | 89 | 4 | **24** | 2 | 30 | 6 | 89 | 6 | 101 | 31 | 30 | 5 | 66 | 286 |
| 05:00 PM | 10 | **70** | 16 | **96** | **5** | 18 | **8** | **31** | **11** | **95** | 9 | **115** | **43** | 33 | 3 | **79** | **321** |
| Total Volume | 42 | 242 | 74 | 358 | 14 | 76 | 22 | 112 | 28 | 367 | 32 | 427 | 134 | 127 | 20 | 281 | 1178 |
| % App. Total | 11.7 | 67.6 | 20.7 | | 12.5 | 67.9 | 19.6 | | 6.6 | 85.9 | 7.5 | | 47.7 | 45.2 | 7.1 | | |
| PHF | .750 | .864 | .740 | .932 | .700 | .792 | .688 | .903 | .636 | .966 | .667 | .928 | .779 | .907 | .625 | .889 | .917 |

Counts Unlimited, Inc.
PO Box 1178
Corona, CA 92878
(951) 268-6268

County of San Bernardino
N/S: Alder Avenue
E/W: Marygold Avenue
Weather: Clear

File Name : CSBALMAPM
Site Code : 06714097
Start Date : 3/11/2014
Page No : 2

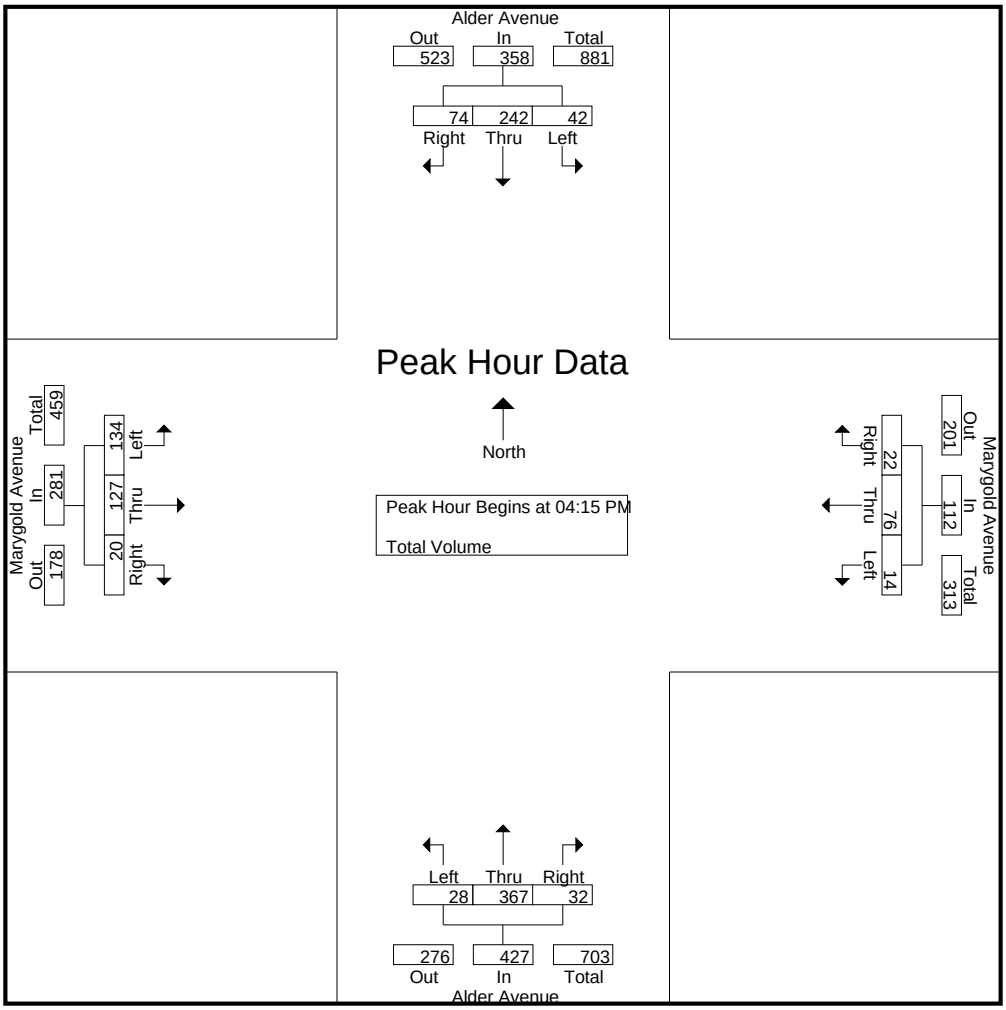


Peak Hour Analysis From 04:00 PM to 05:45 PM - Peak 1 of 1

Peak Hour for Each Approach Begins at:

| | 04:45 PM | | | | 04:15 PM | | | | 04:45 PM | | | | 04:15 PM | | | |
|---|---|---|---|---|---|---|---|---|---|---|---|---|---|---|---|---|
| +0 mins. | 10 | 62 | 17 | 89 | 3 | 18 | 6 | 27 | 6 | 89 | 6 | 101 | 30 | 29 | **8** | 67 |
| +15 mins. | 10 | **70** | 16 | **96** | 2 | 16 | 6 | 24 | **11** | **95** | 9 | **115** | 30 | **35** | 4 | 69 |
| +30 mins. | 13 | 52 | **26** | 91 | 4 | **24** | 2 | 30 | 7 | 89 | **11** | 107 | 31 | 30 | 5 | 66 |
| +45 mins. | **21** | 55 | 12 | 88 | **5** | 18 | **8** | **31** | 7 | 94 | 7 | 108 | **43** | 33 | 3 | **79** |
| Total Volume | 54 | 239 | 71 | 364 | 14 | 76 | 22 | 112 | 31 | 367 | 33 | 431 | 134 | 127 | 20 | 281 |
| % App. Total | 14.8 | 65.7 | 19.5 | | 12.5 | 67.9 | 19.6 | | 7.2 | 85.2 | 7.7 | | 47.7 | 45.2 | 7.1 | |
| PHF | .643 | .854 | .683 | .948 | .700 | .792 | .688 | .903 | .705 | .966 | .750 | .937 | .779 | .907 | .625 | .889 |

Counts Unlimited, Inc.
PO Box 1178
Corona, CA 92878
(951) 268-6268

County of San Bernardino
N/S: Alder Avenue
E/W: Valley Boulevard
Weather: Clear

File Name : CSBALVAAM
Site Code : 06714097
Start Date : 3/11/2014
Page No : 1

Groups Printed- Total Volume

| | Alder Avenue Southbound | | | | Valley Boulevard Westbound | | | | Alder Avenue Northbound | | | | Valley Boulevard Eastbound | | | | |
|---|---|---|---|---|---|---|---|---|---|---|---|---|---|---|---|---|---|
| Start Time | Left | Thru | Right | App. Total | Left | Thru | Right | App. Total | Left | Thru | Right | App. Total | Left | Thru | Right | App. Total | Int. Total |
| 07:00 AM | 19 | 2 | 58 | 79 | 0 | 74 | 18 | 92 | 3 | 2 | 1 | 6 | 24 | 40 | 1 | 65 | 242 |
| 07:15 AM | 31 | 4 | 41 | 76 | 1 | 75 | 4 | 80 | 3 | 4 | 0 | 7 | 47 | 60 | 1 | 108 | 271 |
| 07:30 AM | 34 | 1 | 43 | 78 | 1 | 91 | 17 | 109 | 5 | 1 | 1 | 7 | 44 | 71 | 4 | 119 | 313 |
| 07:45 AM | 20 | 6 | 40 | 66 | 2 | 84 | 19 | 105 | 5 | 1 | 3 | 9 | 30 | 62 | 4 | 96 | 276 |
| Total | 104 | 13 | 182 | 299 | 4 | 324 | 58 | 386 | 16 | 8 | 5 | 29 | 145 | 233 | 10 | 388 | 1102 |
| 08:00 AM | 22 | 2 | 38 | 62 | 0 | 89 | 20 | 109 | 2 | 2 | 0 | 4 | 23 | 51 | 4 | 78 | 253 |
| 08:15 AM | 21 | 1 | 39 | 61 | 2 | 95 | 26 | 123 | 5 | 1 | 3 | 9 | 26 | 49 | 2 | 77 | 270 |
| 08:30 AM | 23 | 2 | 22 | 47 | 2 | 75 | 18 | 95 | 5 | 2 | 4 | 11 | 26 | 68 | 8 | 102 | 255 |
| 08:45 AM | 23 | 6 | 34 | 63 | 1 | 57 | 11 | 69 | 6 | 2 | 1 | 9 | 23 | 63 | 1 | 87 | 228 |
| Total | 89 | 11 | 133 | 233 | 5 | 316 | 75 | 396 | 18 | 7 | 8 | 33 | 98 | 231 | 15 | 344 | 1006 |
| Grand Total | 193 | 24 | 315 | 532 | 9 | 640 | 133 | 782 | 34 | 15 | 13 | 62 | 243 | 464 | 25 | 732 | 2108 |
| Apprch % | 36.3 | 4.5 | 59.2 | | 1.2 | 81.8 | 17 | | 54.8 | 24.2 | 21 | | 33.2 | 63.4 | 3.4 | | |
| Total % | 9.2 | 1.1 | 14.9 | 25.2 | 0.4 | 30.4 | 6.3 | 37.1 | 1.6 | 0.7 | 0.6 | 2.9 | 11.5 | 22 | 1.2 | 34.7 | |

| | Alder Avenue Southbound | | | | Valley Boulevard Westbound | | | | Alder Avenue Northbound | | | | Valley Boulevard Eastbound | | | | |
|---|---|---|---|---|---|---|---|---|---|---|---|---|---|---|---|---|---|
| Start Time | Left | Thru | Right | App. Total | Left | Thru | Right | App. Total | Left | Thru | Right | App. Total | Left | Thru | Right | App. Total | Int. Total |
| Peak Hour Analysis From 07:00 AM to 08:45 AM - Peak 1 of 1 | | | | | | | | | | | | | | | | | |
| Peak Hour for Entire Intersection Begins at 07:15 AM | | | | | | | | | | | | | | | | | |
| 07:15 AM | 31 | 4 | 41 | 76 | 1 | 75 | 4 | 80 | 3 | **4** | 0 | 7 | **47** | 60 | 1 | 108 | 271 |
| 07:30 AM | **34** | 1 | **43** | **78** | 1 | **91** | 17 | **109** | **5** | 1 | 1 | 7 | 44 | **71** | **4** | **119** | **313** |
| 07:45 AM | 20 | **6** | 40 | 66 | **2** | 84 | 19 | 105 | 5 | 1 | **3** | **9** | 30 | 62 | 4 | 96 | 276 |
| 08:00 AM | 22 | 2 | 38 | 62 | 0 | 89 | **20** | 109 | 2 | 2 | 0 | 4 | 23 | 51 | 4 | 78 | 253 |
| Total Volume | 107 | 13 | 162 | 282 | 4 | 339 | 60 | 403 | 15 | 8 | 4 | 27 | 144 | 244 | 13 | 401 | 1113 |
| % App. Total | 37.9 | 4.6 | 57.4 | | 1 | 84.1 | 14.9 | | 55.6 | 29.6 | 14.8 | | 35.9 | 60.8 | 3.2 | | |
| PHF | .787 | .542 | .942 | .904 | .500 | .931 | .750 | .924 | .750 | .500 | .333 | .750 | .766 | .859 | .813 | .842 | .889 |

Counts Unlimited, Inc.
PO Box 1178
Corona, CA 92878
(951) 268-6268

County of San Bernardino
N/S: Alder Avenue
E/W: Valley Boulevard
Weather: Clear

File Name : CSBALVAAM
Site Code : 06714097
Start Date : 3/11/2014
Page No : 2

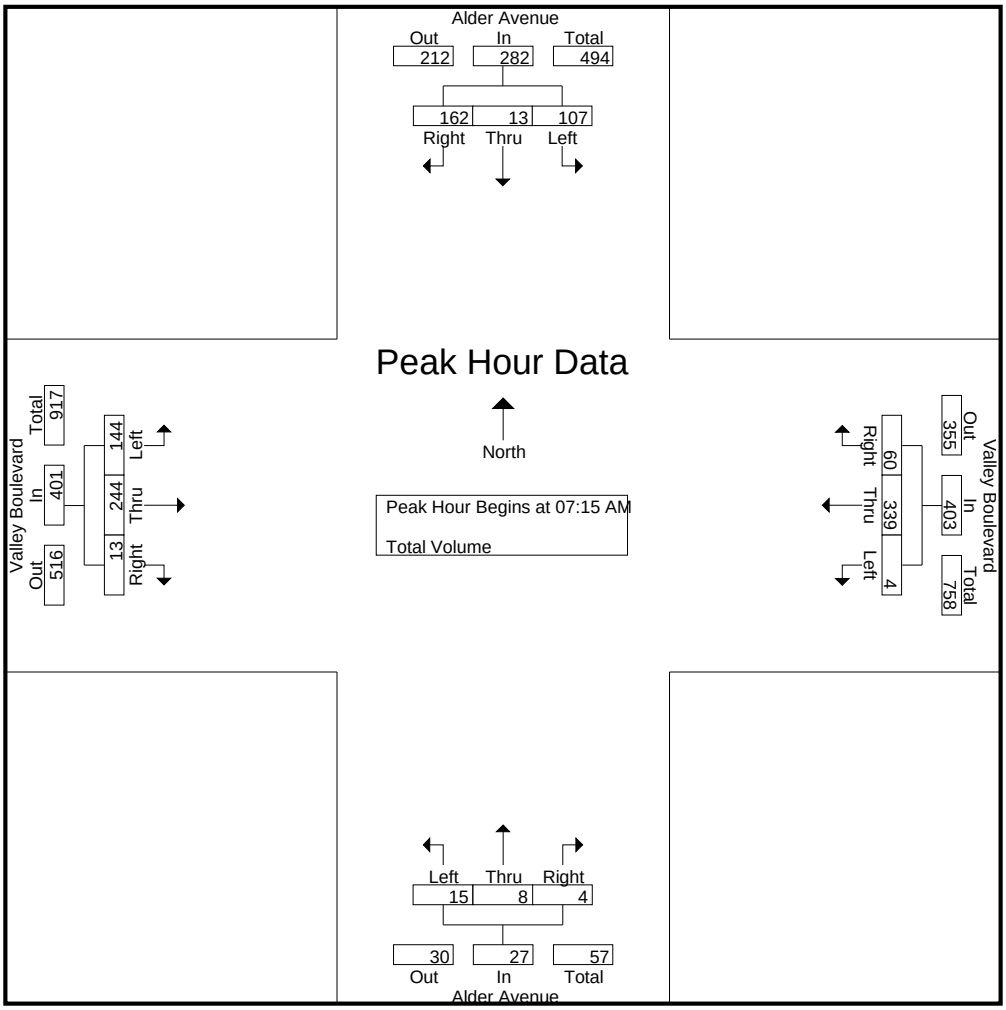


Peak Hour Analysis From 07:00 AM to 08:45 AM - Peak 1 of 1

Peak Hour for Each Approach Begins at:

| | 07:00 AM | | | | 07:30 AM | | | | 07:45 AM | | | | 07:15 AM | | | |
|---|---|---|---|---|---|---|---|---|---|---|---|---|---|---|---|---|
| +0 mins. | 19 | 2 | **58** | **79** | 1 | 91 | 17 | 109 | **5** | 1 | 3 | 9 | **47** | 60 | 1 | 108 |
| +15 mins. | 31 | 4 | 41 | 76 | **2** | 84 | 19 | 105 | 2 | **2** | 0 | 4 | 44 | **71** | **4** | **119** |
| +30 mins. | **34** | 1 | 43 | 78 | 0 | 89 | 20 | 109 | 5 | 1 | 3 | 9 | 30 | 62 | 4 | 96 |
| +45 mins. | 20 | **6** | 40 | 66 | 2 | **95** | **26** | **123** | 5 | 2 | **4** | **11** | 23 | 51 | 4 | 78 |
| Total Volume | 104 | 13 | 182 | 299 | 5 | 359 | 82 | 446 | 17 | 6 | 10 | 33 | 144 | 244 | 13 | 401 |
| % App. Total | 34.8 | 4.3 | 60.9 | | 1.1 | 80.5 | 18.4 | | 51.5 | 18.2 | 30.3 | | 35.9 | 60.8 | 3.2 | |
| PHF | .765 | .542 | .784 | .946 | .625 | .945 | .788 | .907 | .850 | .750 | .625 | .750 | .766 | .859 | .813 | .842 |

Counts Unlimited, Inc.
PO Box 1178
Corona, CA 92878
(951) 268-6268

County of San Bernardino
N/S: Alder Avenue
E/W: Valley Boulevard
Weather: Clear

File Name : CSBALVAPM
Site Code : 06714097
Start Date : 3/11/2014
Page No : 1

Groups Printed- Total Volume

| | Alder Avenue Southbound | | | | Valley Boulevard Westbound | | | | Alder Avenue Northbound | | | | Valley Boulevard Eastbound | | | | |
|---|---|---|---|---|---|---|---|---|---|---|---|---|---|---|---|---|---|
| Start Time | Left | Thru | Right | App. Total | Left | Thru | Right | App. Total | Left | Thru | Right | App. Total | Left | Thru | Right | App. Total | Int. Total |
| 04:00 PM | 34 | 5 | 28 | 67 | 1 | 83 | 29 | 113 | 6 | 2 | 2 | 10 | 54 | 183 | 7 | 244 | 434 |
| 04:15 PM | 27 | 5 | 28 | 60 | 2 | 94 | 44 | 140 | 6 | 7 | 2 | 15 | 54 | 135 | 7 | 196 | 411 |
| 04:30 PM | 33 | 5 | 31 | 69 | 2 | 98 | 32 | 132 | 8 | 2 | 3 | 13 | 62 | 200 | 4 | 266 | 480 |
| 04:45 PM | 27 | 3 | 34 | 64 | 0 | 84 | 28 | 112 | 7 | 5 | 5 | 17 | 72 | 152 | 10 | 234 | 427 |
| Total | 121 | 18 | 121 | 260 | 5 | 359 | 133 | 497 | 27 | 16 | 12 | 55 | 242 | 670 | 28 | 940 | 1752 |
| | | | | | | | | | | | | | | | | | |
| 05:00 PM | 39 | 3 | 37 | 79 | 1 | 80 | 41 | 122 | 11 | 9 | 2 | 22 | 73 | 195 | 9 | 277 | 500 |
| 05:15 PM | 28 | 1 | 30 | 59 | 1 | 67 | 36 | 104 | 6 | 5 | 6 | 17 | 59 | 174 | 5 | 238 | 418 |
| 05:30 PM | 33 | 7 | 28 | 68 | 4 | 122 | 32 | 158 | 9 | 5 | 3 | 17 | 70 | 151 | 11 | 232 | 475 |
| 05:45 PM | 23 | 4 | 28 | 55 | 0 | 147 | 34 | 181 | 9 | 7 | 4 | 20 | 70 | 161 | 13 | 244 | 500 |
| Total | 123 | 15 | 123 | 261 | 6 | 416 | 143 | 565 | 35 | 26 | 15 | 76 | 272 | 681 | 38 | 991 | 1893 |
| | | | | | | | | | | | | | | | | | |
| Grand Total | 244 | 33 | 244 | 521 | 11 | 775 | 276 | 1062 | 62 | 42 | 27 | 131 | 514 | 1351 | 66 | 1931 | 3645 |
| Apprch % | 46.8 | 6.3 | 46.8 | | 1 | 73 | 26 | | 47.3 | 32.1 | 20.6 | | 26.6 | 70 | 3.4 | | |
| Total % | 6.7 | 0.9 | 6.7 | 14.3 | 0.3 | 21.3 | 7.6 | 29.1 | 1.7 | 1.2 | 0.7 | 3.6 | 14.1 | 37.1 | 1.8 | 53 | |

| | Alder Avenue Southbound | | | | Valley Boulevard Westbound | | | | Alder Avenue Northbound | | | | Valley Boulevard Eastbound | | | | |
|---|---|---|---|---|---|---|---|---|---|---|---|---|---|---|---|---|---|
| Start Time | Left | Thru | Right | App. Total | Left | Thru | Right | App. Total | Left | Thru | Right | App. Total | Left | Thru | Right | App. Total | Int. Total |
| Peak Hour Analysis From 04:00 PM to 05:45 PM - Peak 1 of 1 | | | | | | | | | | | | | | | | | |
| Peak Hour for Entire Intersection Begins at 05:00 PM | | | | | | | | | | | | | | | | | |
| 05:00 PM | **39** | 3 | **37** | **79** | 1 | 80 | **41** | 122 | **11** | **9** | 2 | **22** | **73** | **195** | 9 | **277** | **500** |
| 05:15 PM | 28 | 1 | 30 | 59 | 1 | 67 | 36 | 104 | 6 | 5 | **6** | 17 | 59 | 174 | 5 | 238 | 418 |
| 05:30 PM | 33 | **7** | 28 | 68 | **4** | 122 | 32 | 158 | 9 | 5 | 3 | 17 | 70 | 151 | 11 | 232 | 475 |
| 05:45 PM | 23 | 4 | 28 | 55 | 0 | **147** | 34 | **181** | 9 | 7 | 4 | 20 | 70 | 161 | **13** | 244 | 500 |
| Total Volume | 123 | 15 | 123 | 261 | 6 | 416 | 143 | 565 | 35 | 26 | 15 | 76 | 272 | 681 | 38 | 991 | 1893 |
| % App. Total | 47.1 | 5.7 | 47.1 | | 1.1 | 73.6 | 25.3 | | 46.1 | 34.2 | 19.7 | | 27.4 | 68.7 | 3.8 | | |
| PHF | .788 | .536 | .831 | .826 | .375 | .707 | .872 | .780 | .795 | .722 | .625 | .864 | .932 | .873 | .731 | .894 | .947 |

Counts Unlimited, Inc.
PO Box 1178
Corona, CA 92878
(951) 268-6268

County of San Bernardino
N/S: Alder Avenue
E/W: Valley Boulevard
Weather: Clear

File Name : CSBALVAPM
Site Code : 06714097
Start Date : 3/11/2014
Page No : 2

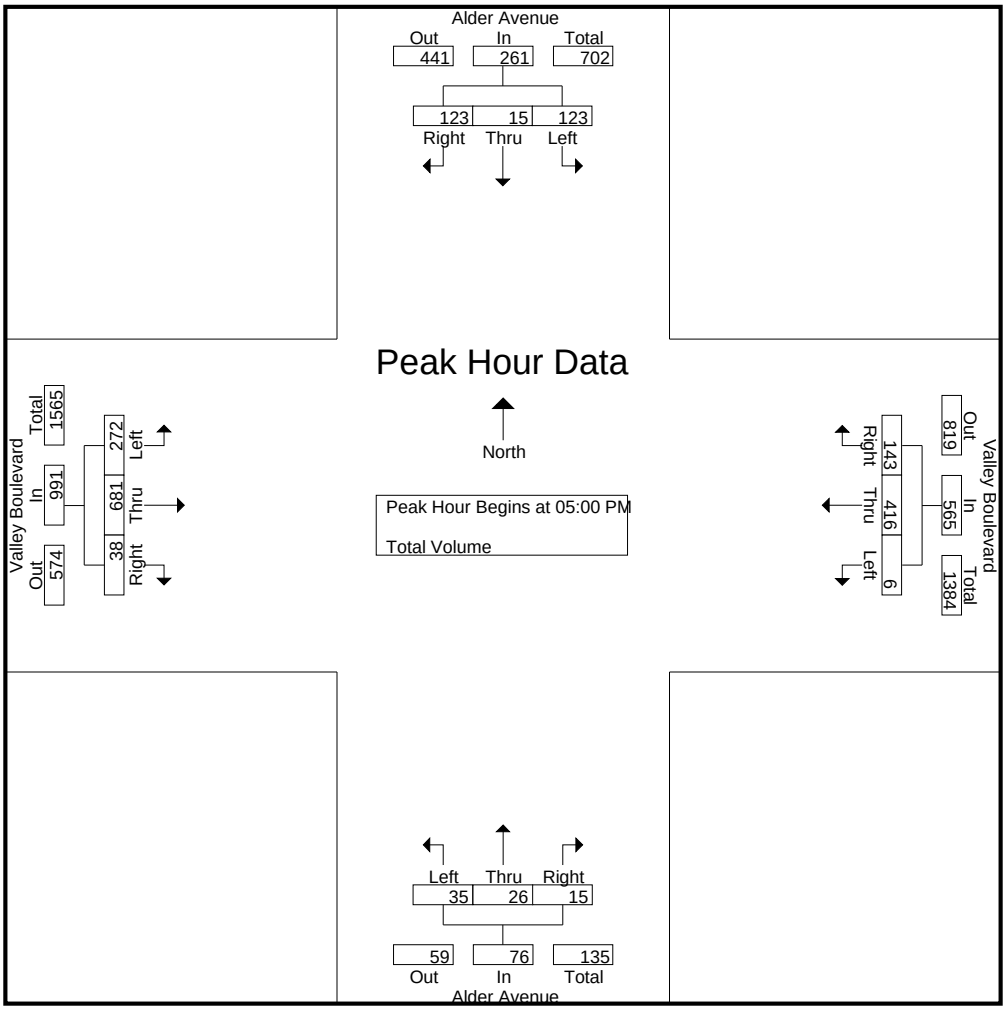


Peak Hour Analysis From 04:00 PM to 05:45 PM - Peak 1 of 1

Peak Hour for Each Approach Begins at:

| | 04:15 PM | | | | 05:00 PM | | | | 05:00 PM | | | | 04:30 PM | | | |
|---|---|---|---|---|---|---|---|---|---|---|---|---|---|---|---|---|
| +0 mins. | 27 | **5** | 28 | 60 | 1 | 80 | **41** | 122 | **11** | **9** | 2 | **22** | 62 | **200** | 4 | 266 |
| +15 mins. | 33 | 5 | 31 | 69 | 1 | 67 | 36 | 104 | 6 | 5 | **6** | 17 | 72 | 152 | **10** | 234 |
| +30 mins. | 27 | 3 | 34 | 64 | **4** | 122 | 32 | 158 | 9 | 5 | 3 | 17 | **73** | 195 | 9 | **277** |
| +45 mins. | **39** | 3 | **37** | **79** | 0 | **147** | 34 | **181** | 9 | 7 | 4 | 20 | 59 | 174 | 5 | 238 |
| Total Volume | 126 | 16 | 130 | 272 | 6 | 416 | 143 | 565 | 35 | 26 | 15 | 76 | 266 | 721 | 28 | 1015 |
| % App. Total | 46.3 | 5.9 | 47.8 | | 1.1 | 73.6 | 25.3 | | 46.1 | 34.2 | 19.7 | | 26.2 | 71 | 2.8 | |
| PHF | .808 | .800 | .878 | .861 | .375 | .707 | .872 | .780 | .795 | .722 | .625 | .864 | .911 | .901 | .700 | .916 |

Counts Unlimited, Inc.
PO Box 1178
Corona, CA 92878
(951) 268-6268

County of San Bernardino
N/S: Locust Avenue
E/W: Marygold Avenue
Weather: Clear

File Name : CSBLOMAAM
Site Code : 06714097
Start Date : 3/11/2014
Page No : 1

Groups Printed- Total Volume

| | Locust Avenue Southbound | | | | Marygold Avenue Westbound | | | | Locust Avenue Northbound | | | | Marygold Avenue Eastbound | | | | |
|---|---|---|---|---|---|---|---|---|---|---|---|---|---|---|---|---|---|
| Start Time | Left | Thru | Right | App. Total | Left | Thru | Right | App. Total | Left | Thru | Right | App. Total | Left | Thru | Right | App. Total | Int. Total |
| 07:00 AM | 4 | 45 | 6 | 55 | 2 | 7 | 2 | 11 | 4 | 13 | 0 | 17 | 3 | 10 | 7 | 20 | 103 |
| 07:15 AM | 7 | 45 | 8 | 60 | 0 | 11 | 2 | 13 | 2 | 30 | 1 | 33 | 3 | 18 | 4 | 25 | 131 |
| 07:30 AM | 3 | 42 | 11 | 56 | 3 | 12 | 0 | 15 | 4 | 26 | 2 | 32 | 9 | 15 | 3 | 27 | 130 |
| 07:45 AM | 3 | 31 | 19 | 53 | 2 | 22 | 1 | 25 | 3 | 21 | 2 | 26 | 4 | 18 | 5 | 27 | 131 |
| Total | 17 | 163 | 44 | 224 | 7 | 52 | 5 | 64 | 13 | 90 | 5 | 108 | 19 | 61 | 19 | 99 | 495 |
| 08:00 AM | 1 | 35 | 9 | 45 | 0 | 6 | 2 | 8 | 4 | 19 | 6 | 29 | 0 | 17 | 7 | 24 | 106 |
| 08:15 AM | 2 | 28 | 3 | 33 | 2 | 13 | 0 | 15 | 2 | 23 | 1 | 26 | 4 | 9 | 2 | 15 | 89 |
| 08:30 AM | 5 | 29 | 4 | 38 | 1 | 8 | 3 | 12 | 2 | 22 | 2 | 26 | 12 | 11 | 2 | 25 | 101 |
| 08:45 AM | 4 | 28 | 10 | 42 | 0 | 7 | 1 | 8 | 2 | 28 | 1 | 31 | 21 | 19 | 6 | 46 | 127 |
| Total | 12 | 120 | 26 | 158 | 3 | 34 | 6 | 43 | 10 | 92 | 10 | 112 | 37 | 56 | 17 | 110 | 423 |
| Grand Total | 29 | 283 | 70 | 382 | 10 | 86 | 11 | 107 | 23 | 182 | 15 | 220 | 56 | 117 | 36 | 209 | 918 |
| Apprch % | 7.6 | 74.1 | 18.3 | | 9.3 | 80.4 | 10.3 | | 10.5 | 82.7 | 6.8 | | 26.8 | 56 | 17.2 | | |
| Total % | 3.2 | 30.8 | 7.6 | 41.6 | 1.1 | 9.4 | 1.2 | 11.7 | 2.5 | 19.8 | 1.6 | 24 | 6.1 | 12.7 | 3.9 | 22.8 | |

| | Locust Avenue Southbound | | | | Marygold Avenue Westbound | | | | Locust Avenue Northbound | | | | Marygold Avenue Eastbound | | | | |
|---|---|---|---|---|---|---|---|---|---|---|---|---|---|---|---|---|---|
| Start Time | Left | Thru | Right | App. Total | Left | Thru | Right | App. Total | Left | Thru | Right | App. Total | Left | Thru | Right | App. Total | Int. Total |
| Peak Hour Analysis From 07:00 AM to 08:45 AM - Peak 1 of 1 | | | | | | | | | | | | | | | | | |
| Peak Hour for Entire Intersection Begins at 07:15 AM | | | | | | | | | | | | | | | | | |
| 07:15 AM | **7** | **45** | 8 | **60** | 0 | 11 | **2** | 13 | 2 | **30** | 1 | **33** | 3 | **18** | 4 | 25 | **131** |
| 07:30 AM | 3 | 42 | 11 | 56 | **3** | 12 | 0 | 15 | **4** | 26 | 2 | 32 | **9** | 15 | 3 | **27** | 130 |
| 07:45 AM | 3 | 31 | **19** | 53 | 2 | **22** | 1 | **25** | 3 | 21 | 2 | 26 | 4 | 18 | 5 | 27 | 131 |
| 08:00 AM | 1 | 35 | 9 | 45 | 0 | 6 | 2 | 8 | 4 | 19 | **6** | 29 | 0 | 17 | **7** | 24 | 106 |
| Total Volume | 14 | 153 | 47 | 214 | 5 | 51 | 5 | 61 | 13 | 96 | 11 | 120 | 16 | 68 | 19 | 103 | 498 |
| % App. Total | 6.5 | 71.5 | 22 | | 8.2 | 83.6 | 8.2 | | 10.8 | 80 | 9.2 | | 15.5 | 66 | 18.4 | | |
| PHF | .500 | .850 | .618 | .892 | .417 | .580 | .625 | .610 | .813 | .800 | .458 | .909 | .444 | .944 | .679 | .954 | .950 |

Counts Unlimited, Inc.
PO Box 1178
Corona, CA 92878
(951) 268-6268

County of San Bernardino
N/S: Locust Avenue
E/W: Marygold Avenue
Weather: Clear

File Name : CSBLOMAAM
Site Code : 06714097
Start Date : 3/11/2014
Page No : 2

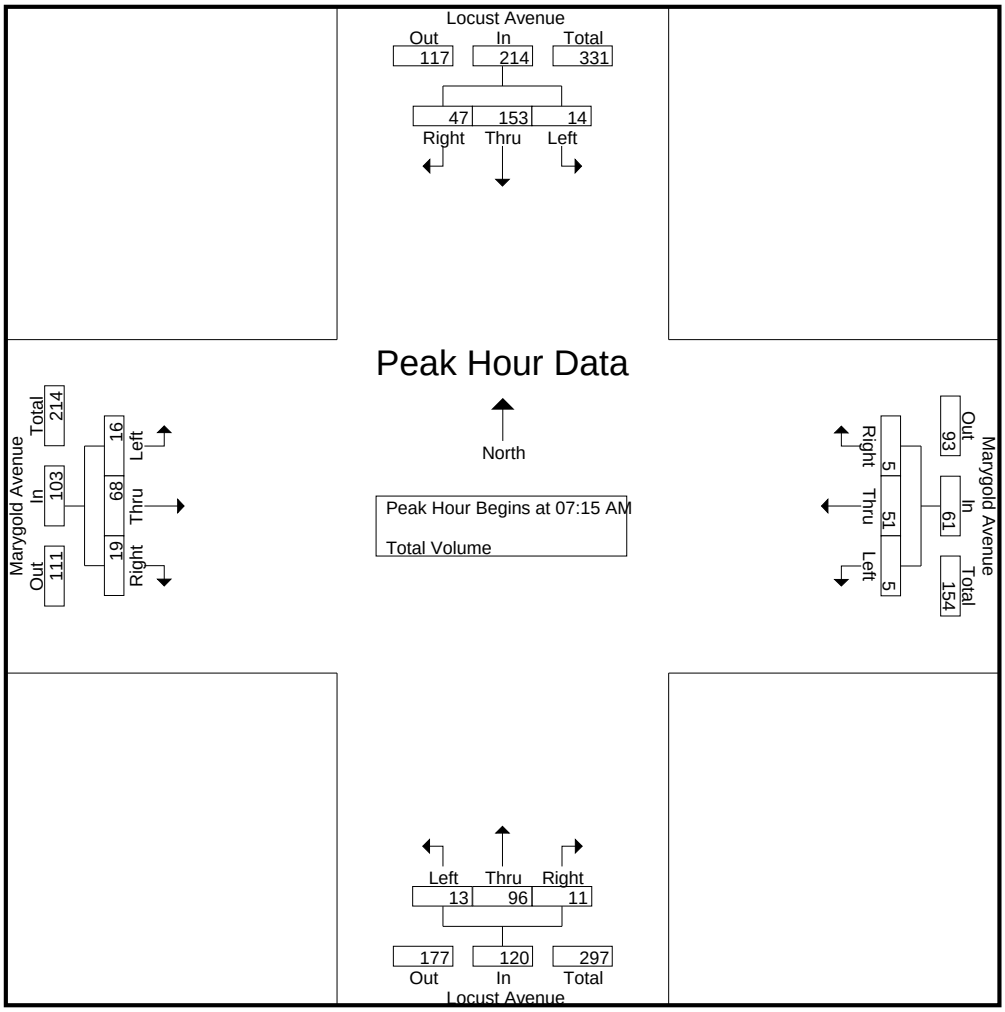


Peak Hour Analysis From 07:00 AM to 08:45 AM - Peak 1 of 1

Peak Hour for Each Approach Begins at:

| | 07:00 AM | | | | 07:00 AM | | | | 07:15 AM | | | | 08:00 AM | | | |
|---|---|---|---|---|---|---|---|---|---|---|---|---|---|---|---|---|
| +0 mins. | 4 | **45** | 6 | 55 | 2 | 7 | **2** | 11 | 2 | **30** | 1 | **33** | 0 | 17 | **7** | 24 |
| +15 mins. | **7** | 45 | 8 | **60** | 0 | 11 | 2 | 13 | **4** | 26 | 2 | 32 | 4 | 9 | 2 | 15 |
| +30 mins. | 3 | 42 | 11 | 56 | **3** | 12 | 0 | 15 | 3 | 21 | 2 | 26 | 12 | 11 | 2 | 25 |
| +45 mins. | 3 | 31 | **19** | 53 | 2 | **22** | 1 | **25** | 4 | 19 | **6** | 29 | **21** | **19** | 6 | **46** |
| Total Volume | 17 | 163 | 44 | 224 | 7 | 52 | 5 | 64 | 13 | 96 | 11 | 120 | 37 | 56 | 17 | 110 |
| % App. Total | 7.6 | 72.8 | 19.6 | | 10.9 | 81.2 | 7.8 | | 10.8 | 80 | 9.2 | | 33.6 | 50.9 | 15.5 | |
| PHF | .607 | .906 | .579 | .933 | .583 | .591 | .625 | .640 | .813 | .800 | .458 | .909 | .440 | .737 | .607 | .598 |

Counts Unlimited, Inc.
PO Box 1178
Corona, CA 92878
(951) 268-6268

County of San Bernardino
N/S: Locust Avenue
E/W: Marygold Avenue
Weather: Clear

File Name : CSBLOMAPM
Site Code : 06714097
Start Date : 3/11/2014
Page No : 1

Groups Printed- Total Volume

| | Locust Avenue Southbound | | | | Marygold Avenue Westbound | | | | Locust Avenue Northbound | | | | Marygold Avenue Eastbound | | | | |
|---|---|---|---|---|---|---|---|---|---|---|---|---|---|---|---|---|---|
| Start Time | Left | Thru | Right | App. Total | Left | Thru | Right | App. Total | Left | Thru | Right | App. Total | Left | Thru | Right | App. Total | Int. Total |
| 04:00 PM | 5 | 28 | 2 | 35 | 1 | 14 | 4 | 19 | 12 | 56 | 4 | 72 | 15 | 19 | 4 | 38 | 164 |
| 04:15 PM | 4 | 26 | 7 | 37 | 2 | 10 | 2 | 14 | 3 | 57 | 3 | 63 | 11 | 25 | 7 | 43 | 157 |
| 04:30 PM | 3 | 32 | 12 | 47 | 1 | 7 | 2 | 10 | 3 | 54 | 5 | 62 | 16 | 24 | 6 | 46 | 165 |
| 04:45 PM | 2 | 35 | 8 | 45 | 0 | 16 | 1 | 17 | 2 | 57 | 9 | 68 | 11 | 27 | 4 | 42 | 172 |
| Total | 14 | 121 | 29 | 164 | 4 | 47 | 9 | 60 | 20 | 224 | 21 | 265 | 53 | 95 | 21 | 169 | 658 |
| 05:00 PM | 2 | 31 | 9 | 42 | 3 | 12 | 4 | 19 | 7 | 81 | 9 | 97 | 13 | 21 | 3 | 37 | 195 |
| 05:15 PM | 5 | 30 | 5 | 40 | 1 | 9 | 2 | 12 | 7 | 68 | 6 | 81 | 15 | 24 | 4 | 43 | 176 |
| 05:30 PM | 4 | 29 | 4 | 37 | 1 | 14 | 4 | 19 | 7 | 56 | 5 | 68 | 8 | 17 | 8 | 33 | 157 |
| 05:45 PM | 4 | 18 | 3 | 25 | 1 | 8 | 1 | 10 | 4 | 47 | 4 | 55 | 15 | 21 | 0 | 36 | 126 |
| Total | 15 | 108 | 21 | 144 | 6 | 43 | 11 | 60 | 25 | 252 | 24 | 301 | 51 | 83 | 15 | 149 | 654 |
| Grand Total | 29 | 229 | 50 | 308 | 10 | 90 | 20 | 120 | 45 | 476 | 45 | 566 | 104 | 178 | 36 | 318 | 1312 |
| Apprch % | 9.4 | 74.4 | 16.2 | | 8.3 | 75 | 16.7 | | 8 | 84.1 | 8 | | 32.7 | 56 | 11.3 | | |
| Total % | 2.2 | 17.5 | 3.8 | 23.5 | 0.8 | 6.9 | 1.5 | 9.1 | 3.4 | 36.3 | 3.4 | 43.1 | 7.9 | 13.6 | 2.7 | 24.2 | |

| | Locust Avenue Southbound | | | | Marygold Avenue Westbound | | | | Locust Avenue Northbound | | | | Marygold Avenue Eastbound | | | | |
|---|---|---|---|---|---|---|---|---|---|---|---|---|---|---|---|---|---|
| Start Time | Left | Thru | Right | App. Total | Left | Thru | Right | App. Total | Left | Thru | Right | App. Total | Left | Thru | Right | App. Total | Int. Total |
| Peak Hour Analysis From 04:00 PM to 05:45 PM - Peak 1 of 1 | | | | | | | | | | | | | | | | | |
| Peak Hour for Entire Intersection Begins at 04:30 PM | | | | | | | | | | | | | | | | | |
| 04:30 PM | 3 | 32 | **12** | **47** | 1 | 7 | 2 | 10 | 3 | 54 | 5 | 62 | **16** | 24 | **6** | **46** | 165 |
| 04:45 PM | 2 | **35** | 8 | 45 | 0 | **16** | 1 | 17 | 2 | 57 | **9** | 68 | 11 | **27** | 4 | 42 | 172 |
| 05:00 PM | 2 | 31 | 9 | 42 | **3** | 12 | **4** | **19** | **7** | **81** | 9 | **97** | 13 | 21 | 3 | 37 | **195** |
| 05:15 PM | **5** | 30 | 5 | 40 | 1 | 9 | 2 | 12 | 7 | 68 | 6 | 81 | 15 | 24 | 4 | 43 | 176 |
| Total Volume | 12 | 128 | 34 | 174 | 5 | 44 | 9 | 58 | 19 | 260 | 29 | 308 | 55 | 96 | 17 | 168 | 708 |
| % App. Total | 6.9 | 73.6 | 19.5 | | 8.6 | 75.9 | 15.5 | | 6.2 | 84.4 | 9.4 | | 32.7 | 57.1 | 10.1 | | |
| PHF | .600 | .914 | .708 | .926 | .417 | .688 | .563 | .763 | .679 | .802 | .806 | .794 | .859 | .889 | .708 | .913 | .908 |

Counts Unlimited, Inc.
PO Box 1178
Corona, CA 92878
(951) 268-6268

County of San Bernardino
N/S: Locust Avenue
E/W: Marygold Avenue
Weather: Clear

File Name : CSBLOMAPM
Site Code : 06714097
Start Date : 3/11/2014
Page No : 2

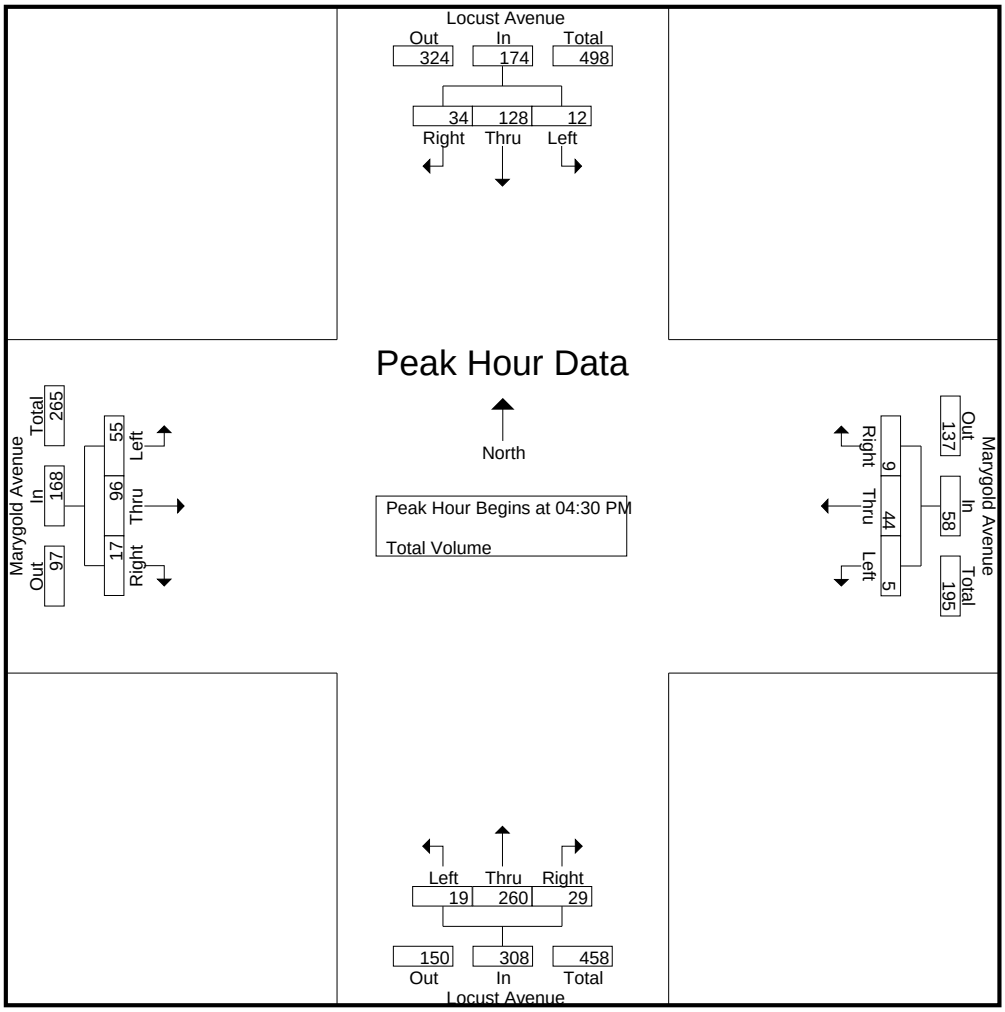


Peak Hour Analysis From 04:00 PM to 05:45 PM - Peak 1 of 1

Peak Hour for Each Approach Begins at:

| | 04:30 PM | | | | 04:45 PM | | | | 04:45 PM | | | | 04:00 PM | | | |
|---|---|---|---|---|---|---|---|---|---|---|---|---|---|---|---|---|
| +0 mins. | 3 | 32 | **12** | **47** | 0 | **16** | 1 | 17 | 2 | 57 | **9** | 68 | 15 | 19 | 4 | 38 |
| +15 mins. | 2 | **35** | 8 | 45 | **3** | 12 | **4** | **19** | **7** | **81** | 9 | **97** | 11 | 25 | **7** | 43 |
| +30 mins. | 2 | 31 | 9 | 42 | 1 | 9 | 2 | 12 | 7 | 68 | 6 | 81 | **16** | 24 | 6 | **46** |
| +45 mins. | **5** | 30 | 5 | 40 | 1 | 14 | 4 | 19 | 7 | 56 | 5 | 68 | 11 | **27** | 4 | 42 |
| Total Volume | 12 | 128 | 34 | 174 | 5 | 51 | 11 | 67 | 23 | 262 | 29 | 314 | 53 | 95 | 21 | 169 |
| % App. Total | 6.9 | 73.6 | 19.5 | | 7.5 | 76.1 | 16.4 | | 7.3 | 83.4 | 9.2 | | 31.4 | 56.2 | 12.4 | |
| PHF | .600 | .914 | .708 | .926 | .417 | .797 | .688 | .882 | .821 | .809 | .806 | .809 | .828 | .880 | .750 | .918 |

Counts Unlimited, Inc.
PO Box 1178
Corona, CA 92878
(951) 268-6268

County of San Bernardino
N/S: Locust Avenue
E/W: Valley Boulevard
Weather: Clear

File Name : CSBLOVAAM
Site Code : 06714097
Start Date : 3/11/2014
Page No : 1

Groups Printed- Total Volume

| | Locust Avenue Southbound | | | | Valley Boulevard Westbound | | | | Locust Avenue Northbound | | | | Valley Boulevard Eastbound | | | | |
|---|---|---|---|---|---|---|---|---|---|---|---|---|---|---|---|---|---|
| Start Time | Left | Thru | Right | App. Total | Left | Thru | Right | App. Total | Left | Thru | Right | App. Total | Left | Thru | Right | App. Total | Int. Total |
| 07:00 AM | 29 | 0 | 26 | 55 | 3 | 64 | 6 | 73 | 0 | 0 | 2 | 2 | 6 | 52 | 0 | 58 | 188 |
| 07:15 AM | 21 | 1 | 26 | 48 | 3 | 65 | 14 | 82 | 0 | 1 | 2 | 3 | 17 | 61 | 0 | 78 | 211 |
| 07:30 AM | 29 | 0 | 25 | 54 | 10 | 91 | 16 | 117 | 0 | 1 | 2 | 3 | 15 | 86 | 0 | 101 | 275 |
| 07:45 AM | 20 | 1 | 15 | 36 | 14 | 90 | 13 | 117 | 0 | 0 | 3 | 3 | 13 | 74 | 3 | 90 | 246 |
| Total | 99 | 2 | 92 | 193 | 30 | 310 | 49 | 389 | 0 | 2 | 9 | 11 | 51 | 273 | 3 | 327 | 920 |
| | | | | | | | | | | | | | | | | | |
| 08:00 AM | 25 | 2 | 19 | 46 | 11 | 100 | 13 | 124 | 1 | 2 | 6 | 9 | 3 | 55 | 0 | 58 | 237 |
| 08:15 AM | 13 | 2 | 19 | 34 | 13 | 104 | 16 | 133 | 0 | 2 | 5 | 7 | 10 | 59 | 0 | 69 | 243 |
| 08:30 AM | 19 | 7 | 13 | 39 | 11 | 70 | 10 | 91 | 0 | 4 | 3 | 7 | 12 | 69 | 2 | 83 | 220 |
| 08:45 AM | 21 | 1 | 10 | 32 | 6 | 57 | 9 | 72 | 0 | 4 | 4 | 8 | 21 | 62 | 3 | 86 | 198 |
| Total | 78 | 12 | 61 | 151 | 41 | 331 | 48 | 420 | 1 | 12 | 18 | 31 | 46 | 245 | 5 | 296 | 898 |
| | | | | | | | | | | | | | | | | | |
| Grand Total | 177 | 14 | 153 | 344 | 71 | 641 | 97 | 809 | 1 | 14 | 27 | 42 | 97 | 518 | 8 | 623 | 1818 |
| Apprch % | 51.5 | 4.1 | 44.5 | | 8.8 | 79.2 | 12 | | 2.4 | 33.3 | 64.3 | | 15.6 | 83.1 | 1.3 | | |
| Total % | 9.7 | 0.8 | 8.4 | 18.9 | 3.9 | 35.3 | 5.3 | 44.5 | 0.1 | 0.8 | 1.5 | 2.3 | 5.3 | 28.5 | 0.4 | 34.3 | |

| | Locust Avenue Southbound | | | | Valley Boulevard Westbound | | | | Locust Avenue Northbound | | | | Valley Boulevard Eastbound | | | | |
|---|---|---|---|---|---|---|---|---|---|---|---|---|---|---|---|---|---|
| Start Time | Left | Thru | Right | App. Total | Left | Thru | Right | App. Total | Left | Thru | Right | App. Total | Left | Thru | Right | App. Total | Int. Total |
| Peak Hour Analysis From 07:00 AM to 08:45 AM - Peak 1 of 1 | | | | | | | | | | | | | | | | | |
| Peak Hour for Entire Intersection Begins at 07:30 AM | | | | | | | | | | | | | | | | | |
| 07:30 AM | **29** | 0 | **25** | **54** | 10 | 91 | **16** | 117 | 0 | 1 | 2 | 3 | **15** | **86** | 0 | **101** | **275** |
| 07:45 AM | 20 | 1 | 15 | 36 | **14** | 90 | 13 | 117 | 0 | 0 | 3 | 3 | 13 | 74 | **3** | 90 | 246 |
| 08:00 AM | 25 | **2** | 19 | 46 | 11 | 100 | 13 | 124 | **1** | **2** | **6** | **9** | 3 | 55 | 0 | 58 | 237 |
| 08:15 AM | 13 | 2 | 19 | 34 | 13 | **104** | 16 | **133** | 0 | 2 | 5 | 7 | 10 | 59 | 0 | 69 | 243 |
| Total Volume | 87 | 5 | 78 | 170 | 48 | 385 | 58 | 491 | 1 | 5 | 16 | 22 | 41 | 274 | 3 | 318 | 1001 |
| % App. Total | 51.2 | 2.9 | 45.9 | | 9.8 | 78.4 | 11.8 | | 4.5 | 22.7 | 72.7 | | 12.9 | 86.2 | 0.9 | | |
| PHF | .750 | .625 | .780 | .787 | .857 | .925 | .906 | .923 | .250 | .625 | .667 | .611 | .683 | .797 | .250 | .787 | .910 |

Counts Unlimited, Inc.
PO Box 1178
Corona, CA 92878
(951) 268-6268

County of San Bernardino
N/S: Locust Avenue
E/W: Valley Boulevard
Weather: Clear

File Name : CSBLOVAAM
Site Code : 06714097
Start Date : 3/11/2014
Page No : 2

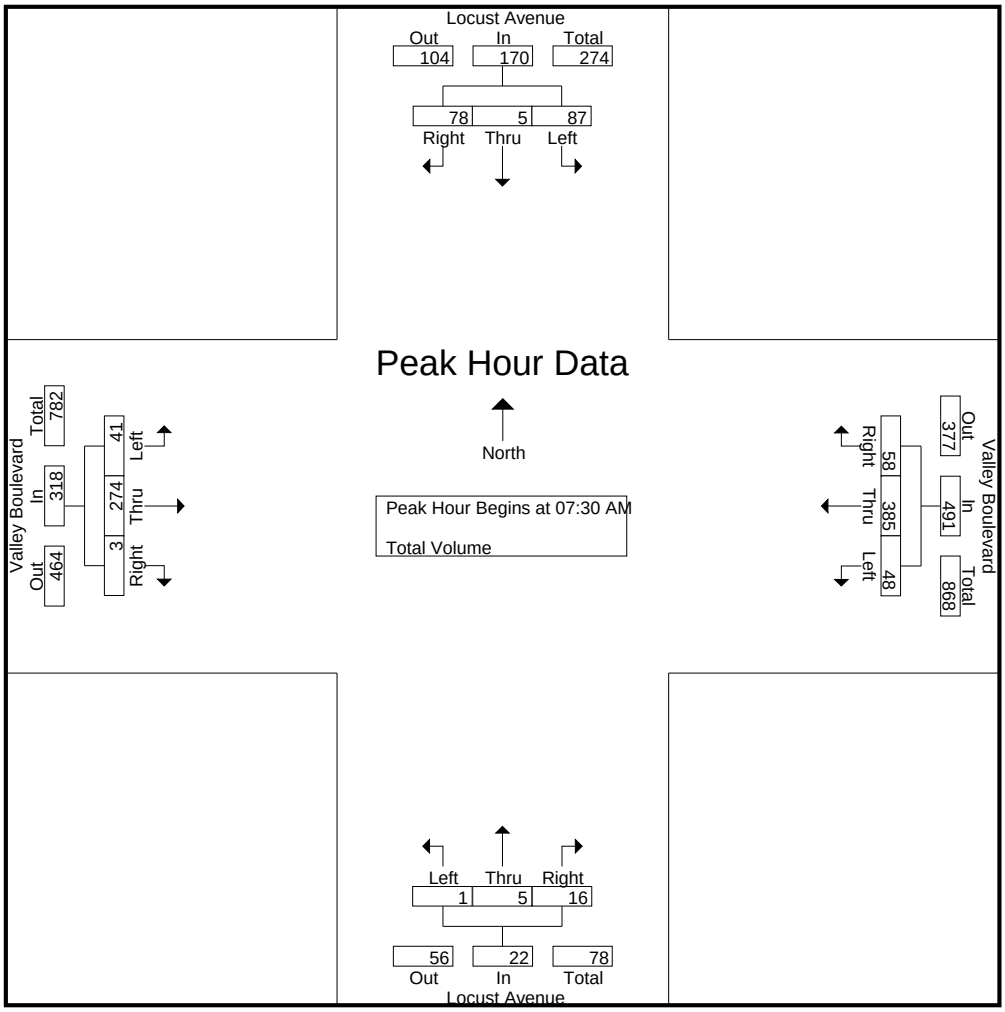


Peak Hour Analysis From 07:00 AM to 08:45 AM - Peak 1 of 1

Peak Hour for Each Approach Begins at:

| | 07:00 AM | | | | 07:30 AM | | | | 08:00 AM | | | | 07:00 AM | | | |
|---|---|---|---|---|---|---|---|---|---|---|---|---|---|---|---|---|
| +0 mins. | **29** | 0 | **26** | **55** | 10 | 91 | **16** | 117 | **1** | 2 | **6** | **9** | 6 | 52 | 0 | 58 |
| +15 mins. | 21 | **1** | 26 | 48 | **14** | 90 | 13 | 117 | 0 | 2 | 5 | 7 | **17** | 61 | 0 | 78 |
| +30 mins. | 29 | 0 | 25 | 54 | 11 | 100 | 13 | 124 | 0 | **4** | 3 | 7 | 15 | **86** | 0 | **101** |
| +45 mins. | 20 | 1 | 15 | 36 | 13 | **104** | 16 | **133** | 0 | 4 | 4 | 8 | 13 | 74 | **3** | 90 |
| Total Volume | 99 | 2 | 92 | 193 | 48 | 385 | 58 | 491 | 1 | 12 | 18 | 31 | 51 | 273 | 3 | 327 |
| % App. Total | 51.3 | 1 | 47.7 | | 9.8 | 78.4 | 11.8 | | 3.2 | 38.7 | 58.1 | | 15.6 | 83.5 | 0.9 | |
| PHF | .853 | .500 | .885 | .877 | .857 | .925 | .906 | .923 | .250 | .750 | .750 | .861 | .750 | .794 | .250 | .809 |

Counts Unlimited, Inc.
PO Box 1178
Corona, CA 92878
(951) 268-6268

County of San Bernardino
N/S: Locust Avenue
E/W: Valley Boulevard
Weather: Clear

File Name : CSBLOVAPM
Site Code : 06714097
Start Date : 3/11/2014
Page No : 1

Groups Printed- Total Volume

| | Locust Avenue Southbound | | | | Valley Boulevard Westbound | | | | Locust Avenue Northbound | | | | Valley Boulevard Eastbound | | | | |
|---|---|---|---|---|---|---|---|---|---|---|---|---|---|---|---|---|---|
| Start Time | Left | Thru | Right | App. Total | Left | Thru | Right | App. Total | Left | Thru | Right | App. Total | Left | Thru | Right | App. Total | Int. Total |
| 04:00 PM | 21 | 2 | 15 | 38 | 18 | 99 | 34 | 151 | 2 | 4 | 12 | 18 | 31 | 189 | 4 | 224 | 431 |
| 04:15 PM | 19 | 1 | 9 | 29 | 19 | 122 | 18 | 159 | 3 | 0 | 5 | 8 | 29 | 136 | 2 | 167 | 363 |
| 04:30 PM | 21 | 2 | 10 | 33 | 30 | 108 | 13 | 151 | 0 | 4 | 5 | 9 | 37 | 216 | 1 | 254 | 447 |
| 04:45 PM | 25 | 2 | 11 | 38 | 19 | 102 | 22 | 143 | 4 | 3 | 5 | 12 | 40 | 193 | 2 | 235 | 428 |
| Total | 86 | 7 | 45 | 138 | 86 | 431 | 87 | 604 | 9 | 11 | 27 | 47 | 137 | 734 | 9 | 880 | 1669 |
| 05:00 PM | 23 | 4 | 11 | 38 | 16 | 106 | 40 | 162 | 1 | 3 | 9 | 13 | 50 | 200 | 2 | 252 | 465 |
| 05:15 PM | 19 | 1 | 15 | 35 | 19 | 95 | 36 | 150 | 5 | 2 | 9 | 16 | 41 | 186 | 4 | 231 | 432 |
| 05:30 PM | 25 | 1 | 14 | 40 | 11 | 144 | 30 | 185 | 2 | 4 | 9 | 15 | 41 | 168 | 3 | 212 | 452 |
| 05:45 PM | 11 | 1 | 8 | 20 | 25 | 160 | 20 | 205 | 4 | 1 | 10 | 15 | 27 | 168 | 8 | 203 | 443 |
| Total | 78 | 7 | 48 | 133 | 71 | 505 | 126 | 702 | 12 | 10 | 37 | 59 | 159 | 722 | 17 | 898 | 1792 |
| Grand Total | 164 | 14 | 93 | 271 | 157 | 936 | 213 | 1306 | 21 | 21 | 64 | 106 | 296 | 1456 | 26 | 1778 | 3461 |
| Apprch % | 60.5 | 5.2 | 34.3 | | 12 | 71.7 | 16.3 | | 19.8 | 19.8 | 60.4 | | 16.6 | 81.9 | 1.5 | | |
| Total % | 4.7 | 0.4 | 2.7 | 7.8 | 4.5 | 27 | 6.2 | 37.7 | 0.6 | 0.6 | 1.8 | 3.1 | 8.6 | 42.1 | 0.8 | 51.4 | |

| | Locust Avenue Southbound | | | | Valley Boulevard Westbound | | | | Locust Avenue Northbound | | | | Valley Boulevard Eastbound | | | | |
|---|---|---|---|---|---|---|---|---|---|---|---|---|---|---|---|---|---|
| Start Time | Left | Thru | Right | App. Total | Left | Thru | Right | App. Total | Left | Thru | Right | App. Total | Left | Thru | Right | App. Total | Int. Total |
| Peak Hour Analysis From 04:00 PM to 05:45 PM - Peak 1 of 1 | | | | | | | | | | | | | | | | | |
| Peak Hour for Entire Intersection Begins at 05:00 PM | | | | | | | | | | | | | | | | | |
| 05:00 PM | 23 | **4** | 11 | 38 | 16 | 106 | **40** | 162 | 1 | 3 | 9 | 13 | **50** | **200** | 2 | **252** | **465** |
| 05:15 PM | 19 | 1 | **15** | 35 | 19 | 95 | 36 | 150 | **5** | 2 | 9 | **16** | 41 | 186 | 4 | 231 | 432 |
| 05:30 PM | **25** | 1 | 14 | **40** | 11 | 144 | 30 | 185 | 2 | **4** | 9 | 15 | 41 | 168 | 3 | 212 | 452 |
| 05:45 PM | 11 | 1 | 8 | 20 | **25** | **160** | 20 | **205** | 4 | 1 | **10** | 15 | 27 | 168 | **8** | 203 | 443 |
| Total Volume | 78 | 7 | 48 | 133 | 71 | 505 | 126 | 702 | 12 | 10 | 37 | 59 | 159 | 722 | 17 | 898 | 1792 |
| % App. Total | 58.6 | 5.3 | 36.1 | | 10.1 | 71.9 | 17.9 | | 20.3 | 16.9 | 62.7 | | 17.7 | 80.4 | 1.9 | | |
| PHF | .780 | .438 | .800 | .831 | .710 | .789 | .788 | .856 | .600 | .625 | .925 | .922 | .795 | .903 | .531 | .891 | .963 |

Counts Unlimited, Inc.
PO Box 1178
Corona, CA 92878
(951) 268-6268

County of San Bernardino
N/S: Locust Avenue
E/W: Valley Boulevard
Weather: Clear

File Name : CSBLOVAPM
Site Code : 06714097
Start Date : 3/11/2014
Page No : 2

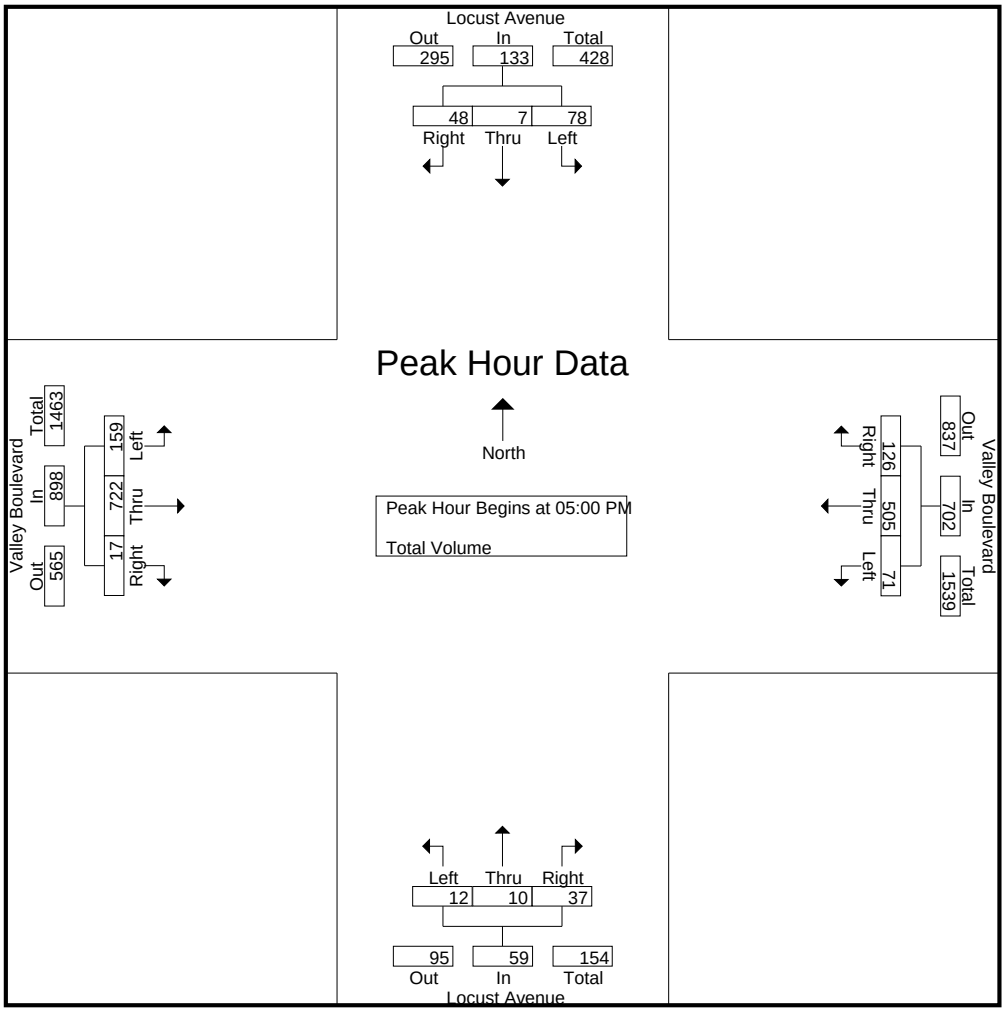


Peak Hour Analysis From 04:00 PM to 05:45 PM - Peak 1 of 1

Peak Hour for Each Approach Begins at:

| | 04:45 PM | | | | 05:00 PM | | | | 05:00 PM | | | | 04:30 PM | | | |
|---|---|---|---|---|---|---|---|---|---|---|---|---|---|---|---|---|
| +0 mins. | **25** | 2 | 11 | 38 | 16 | 106 | **40** | 162 | 1 | 3 | 9 | 13 | 37 | **216** | 1 | **254** |
| +15 mins. | 23 | **4** | 11 | 38 | 19 | 95 | 36 | 150 | **5** | 2 | 9 | **16** | 40 | 193 | 2 | 235 |
| +30 mins. | 19 | 1 | **15** | 35 | 11 | 144 | 30 | 185 | 2 | **4** | 9 | 15 | **50** | 200 | 2 | 252 |
| +45 mins. | 25 | 1 | 14 | **40** | **25** | **160** | 20 | **205** | 4 | 1 | **10** | 15 | 41 | 186 | **4** | 231 |
| Total Volume | 92 | 8 | 51 | 151 | 71 | 505 | 126 | 702 | 12 | 10 | 37 | 59 | 168 | 795 | 9 | 972 |
| % App. Total | 60.9 | 5.3 | 33.8 | | 10.1 | 71.9 | 17.9 | | 20.3 | 16.9 | 62.7 | | 17.3 | 81.8 | 0.9 | |
| PHF | .920 | .500 | .850 | .944 | .710 | .789 | .788 | .856 | .600 | .625 | .925 | .922 | .840 | .920 | .563 | .957 |

# CEDAR AVE.@ SAN BERNARDINO AVE.
## SAN BERNARDINO COUNTY
## PUBLIC WORKS
## TRAFFIC DIVISION

File Name : CEDAR@SB120503
Site Code : 00000000
Start Date : 05/03/2012
Page No : 1

Groups Printed- Unshifted

| | CEDAR AVE. Northbound | | | | CEDAR AVE. Southbound | | | | SAN BERNARDINO AVE. Eastbound | | | | SAN BERNARDINO AVE. Westbound | | | | |
|---|---|---|---|---|---|---|---|---|---|---|---|---|---|---|---|---|---|
| Start Time | Right | Thru | Left | Peds | Right | Thru | Left | Peds | Right | Thru | Left | Peds | Right | Thru | Left | Peds | Int. Total |
| Factor | 1.0 | 1.0 | 1.0 | 1.0 | 1.0 | 1.0 | 1.0 | 1.0 | 1.0 | 1.0 | 1.0 | 1.0 | 1.0 | 1.0 | 1.0 | 1.0 | |
| 07:00 AM | 4 | 150 | 6 | 0 | 7 | 242 | 13 | 1 | 9 | 26 | 3 | 0 | 6 | 17 | 12 | 0 | 496 |
| 07:15 AM | 15 | 163 | 13 | 1 | 8 | 257 | 51 | 0 | 5 | 31 | 3 | 0 | 17 | 20 | 19 | 2 | 605 |
| 07:30 AM | 12 | 175 | 14 | 0 | 9 | 209 | 19 | 0 | 11 | 29 | 4 | 0 | 18 | 39 | 13 | 3 | 555 |
| 07:45 AM | 7 | 176 | 22 | 0 | 15 | 167 | 11 | 0 | 4 | 24 | 8 | 0 | 13 | 36 | 8 | 0 | 491 |
| Total | 38 | 664 | 55 | 1 | 39 | 875 | 94 | 1 | 29 | 110 | 18 | 0 | 54 | 112 | 52 | 5 | 2147 |
| 08:00 AM | 5 | 104 | 19 | 0 | 18 | 212 | 6 | 1 | 10 | 23 | 3 | 0 | 7 | 49 | 5 | 1 | 463 |
| 08:15 AM | 4 | 130 | 13 | 1 | 10 | 196 | 20 | 0 | 11 | 24 | 8 | 0 | 3 | 22 | 4 | 1 | 447 |
| 08:30 AM | 4 | 134 | 8 | 0 | 7 | 181 | 9 | 0 | 10 | 18 | 4 | 0 | 4 | 17 | 8 | 0 | 404 |
| 08:45 AM | 6 | 109 | 10 | 1 | 7 | 163 | 7 | 1 | 5 | 16 | 9 | 1 | 6 | 24 | 4 | 0 | 369 |
| Total | 19 | 477 | 50 | 2 | 42 | 752 | 42 | 2 | 36 | 81 | 24 | 1 | 20 | 112 | 21 | 2 | 1683 |
| 04:00 PM | 19 | 204 | 13 | 0 | 6 | 61 | 5 | 1 | 11 | 44 | 8 | 0 | 14 | 30 | 2 | 0 | 418 |
| 04:15 PM | 14 | 203 | 6 | 0 | 4 | 163 | 17 | 1 | 12 | 34 | 5 | 1 | 9 | 19 | 5 | 4 | 497 |
| 04:30 PM | 10 | 199 | 13 | 1 | 9 | 187 | 12 | 0 | 14 | 26 | 11 | 0 | 6 | 20 | 6 | 2 | 516 |
| 04:45 PM | 15 | 235 | 11 | 0 | 8 | 162 | 7 | 0 | 16 | 35 | 6 | 1 | 5 | 29 | 10 | 0 | 540 |
| Total | 58 | 841 | 43 | 1 | 27 | 573 | 41 | 2 | 53 | 139 | 30 | 2 | 34 | 98 | 23 | 6 | 1971 |
| 05:00 PM | 13 | 220 | 6 | 1 | 10 | 190 | 15 | 2 | 14 | 52 | 13 | 5 | 11 | 30 | 8 | 0 | 590 |
| 05:15 PM | 12 | 255 | 11 | 0 | 8 | 195 | 7 | 5 | 8 | 34 | 10 | 0 | 24 | 30 | 7 | 3 | 609 |
| 05:30 PM | 13 | 197 | 9 | 0 | 9 | 197 | 10 | 3 | 12 | 30 | 7 | 9 | 7 | 17 | 5 | 5 | 530 |
| 05:45 PM | 17 | 203 | 12 | 1 | 13 | 153 | 11 | 0 | 10 | 38 | 11 | 0 | 8 | 33 | 5 | 10 | 525 |
| Total | 55 | 875 | 38 | 2 | 40 | 735 | 43 | 10 | 44 | 154 | 41 | 14 | 50 | 110 | 25 | 18 | 2254 |
| Grand Total | 170 | 2857 | 186 | 6 | 148 | 2935 | 220 | 15 | 162 | 484 | 113 | 17 | 158 | 432 | 121 | 31 | 8055 |
| Apprch % | 5.3 | 88.8 | 5.8 | 0.2 | 4.5 | 88.5 | 6.6 | 0.5 | 20.9 | 62.4 | 14.6 | 2.2 | 21.3 | 58.2 | 16.3 | 4.2 | |
| Total % | 2.1 | 35.5 | 2.3 | 0.1 | 1.8 | 36.4 | 2.7 | 0.2 | 2.0 | 6.0 | 1.4 | 0.2 | 2.0 | 5.4 | 1.5 | 0.4 | |

SAN BERNARDINO COUNTY
Department Of Public works
Traffic Division

COMMERCIAL TRUCK COUNT

COUNT BY: David Tran

LOCATION: Cedar Ave. @ San Bernardino Ave.

DATE: 5/3/2012

| | | Cedar Ave. | | | | Cedar Ave. | | San Bernardino Ave. | | | San Bernardino Ave. | | |
|---|---|---|---|---|---|---|---|---|---|---|---|---|---|
| TIME | TYPE | NB RT | NB THRU | NB LT | SB RT | SB THRU | SB LT | EB RT | EB THRU | EB LT | WB RT | WB THRU | WB LT |
| 7:00-7:15 AM | 2-AXLE | | 6 | 1 | | 8 | | 1 | 1 | | | 1 | |
| | 3-AXLE | | 2 | 1 | | | 1 | | | | | 1 | |
| | 4-AXLE | | | | | | | | | | | | |
| | 5-AXLE + | | 8 | | | 8 | | | | | | | |
| 7:15-7:30 AM | 2-AXLE | 1 | 5 | | | 9 | | | 1 | | | | 1 |
| | 3-AXLE | | 2 | 1 | | 2 | | | | | | | |
| | 4-AXLE | | | | | | | | | | | | |
| | 5-AXLE + | | 9 | | | 2 | | 1 | | | | | |
| 7:30-7:45 AM | 2-AXLE | | 6 | | | 7 | | | 1 | | 1 | 1 | |
| | 3-AXLE | | 2 | | | 3 | | 2 | | | | | |
| | 4-AXLE | | | | | | | | | | | | |
| | 5-AXLE + | | 5 | | | 4 | | | | | | | |
| 7:45-8:00 AM | 2-AXLE | | 2 | 1 | 1 | 6 | 1 | 1 | 1 | | 1 | 1 | |
| | 3-AXLE | | 3 | | | 3 | | | 1 | | | | |
| | 4-AXLE | | 2 | | | | | | | | | | |
| | 5-AXLE + | | 1 | | | 2 | | | | | | | |
| 8:00-8:15 AM | 2-AXLE | | 2 | 1 | 1 | 6 | | | | | | 1 | |
| | 3-AXLE | | 2 | | | | | | | | | | 1 |
| | 4-AXLE | | | | | 1 | | | | | | | |
| | 5-AXLE + | | 4 | | | 7 | | | | | | | 1 |
| 8:15-8:30 AM | 2-AXLE | | 4 | | | 5 | | | | | | | |
| | 3-AXLE | | 1 | | | 4 | | 1 | 1 | | | | |
| | 4-AXLE | | | | | | | | | | | | |
| | 5-AXLE + | | 7 | 1 | | 12 | 1 | | | | | | |
| 8:30-8:45 AM | 2-AXLE | | 6 | 1 | | 4 | | | | | | 1 | |
| | 3-AXLE | | 4 | | | 1 | | | | | | | |
| | 4-AXLE | | | | | | | | | | | | |
| | 5-AXLE + | | 2 | | | 5 | 1 | | | | | | |
| 8:45-9:00 AM | 2-AXLE | | 2 | | | 5 | | | 2 | 1 | 1 | 3 | |
| | 3-AXLE | | | | | | | | | | | | |
| | 4-AXLE | | | | | 2 | | | | | | | |
| | 5-AXLE + | | 4 | | | 6 | | | | | 1 | | |

| TIME | TYPE | NB RT | NB THRU | NB LT | SB RT | SB THRU | SB LT | EB RT | EB THRU | EB LT | WB RT | WB THRU | WB LT |
|---|---|---|---|---|---|---|---|---|---|---|---|---|---|
| 4:00-4:15 PM | 2-AXLE | | 5 | 1 | | 3 | | | 1 | | | 4 | |
| | 3-AXLE | | 1 | | | 1 | | | | | | | |
| | 4-AXLE | | | | | | | | | | | | |
| | 5-AXLE + | | 4 | 1 | | 4 | | | | | | | |
| 4:15-4:30 PM | 2-AXLE | | 4 | | | 5 | | | 1 | 2 | | | |
| | 3-AXLE | | 1 | | | 4 | | 3 | | | | | |
| | 4-AXLE | | | | | | | | | | | | |
| | 5-AXLE + | | 3 | | | 6 | | | | | | | |
| 4:30-4:45 PM | 2-AXLE | | 4 | | | 2 | | | 1 | | 1 | 1 | |
| | 3-AXLE | | | | | 4 | | | | | | | |
| | 4-AXLE | | | | | | | | | | | | |
| | 5-AXLE + | | 2 | | | 1 | | 1 | | | | | |
| 4:45-5:00 PM | 2-AXLE | | 3 | | | 4 | 1 | | 1 | | | 1 | 1 |
| | 3-AXLE | | 1 | | | 3 | | | | | | | |
| | 4-AXLE | | | | | | | | | | | | |
| | 5-AXLE + | | 3 | | | 7 | | 1 | | | | | |
| 5:00-5:15 PM | 2-AXLE | | 5 | | | 3 | | | | | | 2 | |
| | 3-AXLE | | 1 | | | 3 | | | | | | | |
| | 4-AXLE | | | | | | | | | | | | |
| | 5-AXLE + | | 3 | | | 1 | | | | | | | |
| 5:15-5:30 PM | 2-AXLE | | 4 | | | 4 | | | 1 | | | | 1 |
| | 3-AXLE | | | | | 1 | | | | | | | |
| | 4-AXLE | | | | | | | | | | | | |
| | 5-AXLE + | | 6 | | | 2 | | | | | | | |
| 5:30-5:45 PM | 2-AXLE | 1 | 2 | | | 2 | 1 | | | 2 | 1 | 1 | |
| | 3-AXLE | | 1 | | | | | | | | | | |
| | 4-AXLE | | | | | | | | | | | | |
| | 5-AXLE + | | 1 | | | 3 | | | | | | | |
| 5:45-6:00 PM | 2-AXLE | | 3 | 1 | | 3 | | | 2 | | | 1 | |
| | 3-AXLE | | 1 | | | 1 | | | | | | | |
| | 4-AXLE | | | | | | | | | | | | |
| | 5-AXLE + | | 1 | | | 2 | | | | | | | |

Counts Unlimited, Inc.
PO Box 1178
Corona, CA 92878
(951) 268-6268

County of San Bernardino
N/S: Cedar Avenue
E/W: Bloomington Avenue
Weather: Clear

File Name : CSBCEBLAM
Site Code : 06714097
Start Date : 3/11/2014
Page No : 1

Groups Printed- Passenger Vehicles - Large 2 Axle Vehicles - 3 Axle Vehicles - 4+ Axle Trucks

| | Cedar Avenue Southbound | | | Bloomington Avenue Westbound | | | Cedar Avenue Northbound | | | |
|---|---|---|---|---|---|---|---|---|---|---|
| Start Time | Left | Thru | App. Total | Left | Right | App. Total | Thru | Right | App. Total | Int. Total |
| 07:00 AM | 13 | 248 | 261 | 64 | 6 | 70 | 164 | 69 | 233 | 564 |
| 07:15 AM | 23 | 279 | 302 | 71 | 7 | 78 | 177 | 72 | 249 | 629 |
| 07:30 AM | 15 | 261 | 276 | 97 | 34 | 131 | 179 | 81 | 260 | 667 |
| 07:45 AM | 17 | 218 | 235 | 83 | 9 | 92 | 204 | 60 | 264 | 591 |
| Total | 68 | 1006 | 1074 | 315 | 56 | 371 | 724 | 282 | 1006 | 2451 |
| 08:00 AM | 12 | 218 | 230 | 63 | 4 | 67 | 138 | 44 | 182 | 479 |
| 08:15 AM | 15 | 251 | 266 | 61 | 8 | 69 | 134 | 32 | 166 | 501 |
| 08:30 AM | 16 | 209 | 225 | 55 | 14 | 69 | 138 | 36 | 174 | 468 |
| 08:45 AM | 23 | 183 | 206 | 51 | 11 | 62 | 127 | 55 | 182 | 450 |
| Total | 66 | 861 | 927 | 230 | 37 | 267 | 537 | 167 | 704 | 1898 |
| Grand Total | 134 | 1867 | 2001 | 545 | 93 | 638 | 1261 | 449 | 1710 | 4349 |
| Apprch % | 6.7 | 93.3 | | 85.4 | 14.6 | | 73.7 | 26.3 | | |
| Total % | 3.1 | 42.9 | 46 | 12.5 | 2.1 | 14.7 | 29 | 10.3 | 39.3 | |
| Passenger Vehicles | 133 | 1768 | 1901 | 535 | 91 | 626 | 1174 | 435 | 1609 | 4136 |
| % Passenger Vehicles | 99.3 | 94.7 | 95 | 98.2 | 97.8 | 98.1 | 93.1 | 96.9 | 94.1 | 95.1 |
| Large 2 Axle Vehicles | 1 | 35 | 36 | 5 | 1 | 6 | 32 | 0 | 32 | 74 |
| % Large 2 Axle Vehicles | 0.7 | 1.9 | 1.8 | 0.9 | 1.1 | 0.9 | 2.5 | 0 | 1.9 | 1.7 |
| 3 Axle Vehicles | 0 | 10 | 10 | 0 | 0 | 0 | 18 | 12 | 30 | 40 |
| % 3 Axle Vehicles | 0 | 0.5 | 0.5 | 0 | 0 | 0 | 1.4 | 2.7 | 1.8 | 0.9 |
| 4+ Axle Trucks | 0 | 54 | 54 | 5 | 1 | 6 | 37 | 2 | 39 | 99 |
| % 4+ Axle Trucks | 0 | 2.9 | 2.7 | 0.9 | 1.1 | 0.9 | 2.9 | 0.4 | 2.3 | 2.3 |

| | Cedar Avenue Southbound | | | Bloomington Avenue Westbound | | | Cedar Avenue Northbound | | | |
|---|---|---|---|---|---|---|---|---|---|---|
| Start Time | Left | Thru | App. Total | Left | Right | App. Total | Thru | Right | App. Total | Int. Total |
| Peak Hour Analysis From 07:00 AM to 08:45 AM - Peak 1 of 1 | | | | | | | | | | |
| Peak Hour for Entire Intersection Begins at 07:00 AM | | | | | | | | | | |
| 07:00 AM | 13 | 248 | 261 | 64 | 6 | 70 | 164 | 69 | 233 | 564 |
| 07:15 AM | **23** | **279** | **302** | 71 | 7 | 78 | 177 | 72 | 249 | 629 |
| 07:30 AM | 15 | 261 | 276 | **97** | **34** | **131** | 179 | **81** | 260 | **667** |
| 07:45 AM | 17 | 218 | 235 | 83 | 9 | 92 | **204** | 60 | **264** | 591 |
| Total Volume | 68 | 1006 | 1074 | 315 | 56 | 371 | 724 | 282 | 1006 | 2451 |
| % App. Total | 6.3 | 93.7 | | 84.9 | 15.1 | | 72 | 28 | | |
| PHF | .739 | .901 | .889 | .812 | .412 | .708 | .887 | .870 | .953 | .919 |

Counts Unlimited, Inc.
PO Box 1178
Corona, CA 92878
(951) 268-6268

County of San Bernardino
N/S: Cedar Avenue
E/W: Bloomington Avenue
Weather: Clear

File Name : CSBCEBLAM
Site Code : 06714097
Start Date : 3/11/2014
Page No : 2

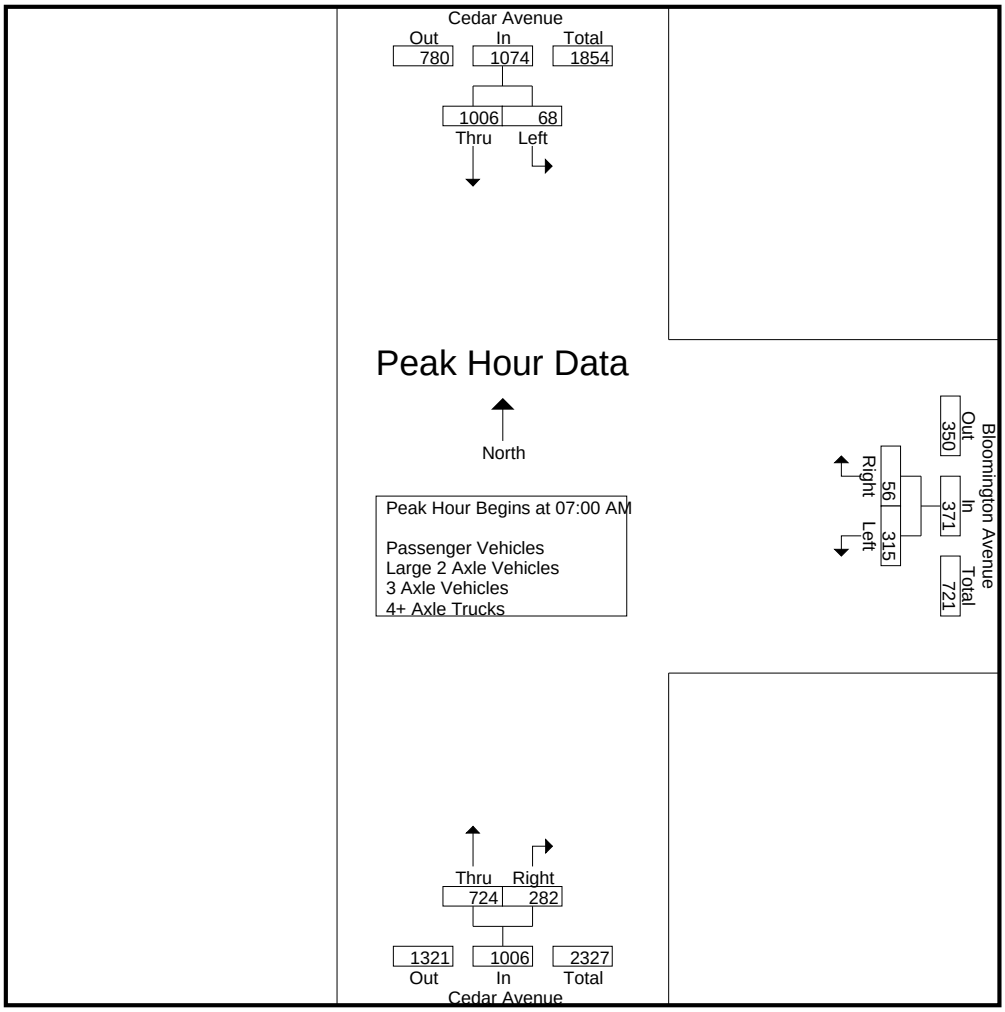


Peak Hour Analysis From 07:00 AM to 08:45 AM - Peak 1 of 1

Peak Hour for Each Approach Begins at:

| | 07:00 AM | | | 07:00 AM | | | 07:00 AM | | |
|---|---|---|---|---|---|---|---|---|---|
| +0 mins. | 13 | 248 | 261 | 64 | 6 | 70 | 164 | 69 | 233 |
| +15 mins. | **23** | **279** | **302** | 71 | 7 | 78 | 177 | 72 | 249 |
| +30 mins. | 15 | 261 | 276 | **97** | **34** | **131** | 179 | **81** | 260 |
| +45 mins. | 17 | 218 | 235 | 83 | 9 | 92 | **204** | 60 | **264** |
| Total Volume | 68 | 1006 | 1074 | 315 | 56 | 371 | 724 | 282 | 1006 |
| % App. Total | 6.3 | 93.7 | | 84.9 | 15.1 | | 72 | 28 | |
| PHF | .739 | .901 | .889 | .812 | .412 | .708 | .887 | .870 | .953 |

Counts Unlimited, Inc.
PO Box 1178
Corona, CA 92878
(951) 268-6268

County of San Bernardino
N/S: Cedar Avenue
E/W: Bloomington Avenue
Weather: Clear

File Name : CSBCEBLAM
Site Code : 06714097
Start Date : 3/11/2014
Page No : 1

Groups Printed- Passenger Vehicles

| | Cedar Avenue Southbound | | | Bloomington Avenue Westbound | | | Cedar Avenue Northbound | | | |
|---|---|---|---|---|---|---|---|---|---|---|
| Start Time | Left | Thru | App. Total | Left | Right | App. Total | Thru | Right | App. Total | Int. Total |
| 07:00 AM | 13 | 240 | 253 | 63 | 6 | 69 | 150 | 67 | 217 | 539 |
| 07:15 AM | 23 | 265 | 288 | 71 | 7 | 78 | 165 | 72 | 237 | 603 |
| 07:30 AM | 15 | 252 | 267 | 92 | 34 | 126 | 170 | 81 | 251 | 644 |
| 07:45 AM | 17 | 206 | 223 | 83 | 9 | 92 | 192 | 59 | 251 | 566 |
| Total | 68 | 963 | 1031 | 309 | 56 | 365 | 677 | 279 | 956 | 2352 |
| 08:00 AM | 12 | 204 | 216 | 62 | 4 | 66 | 127 | 40 | 167 | 449 |
| 08:15 AM | 15 | 233 | 248 | 60 | 6 | 66 | 123 | 30 | 153 | 467 |
| 08:30 AM | 16 | 198 | 214 | 53 | 14 | 67 | 130 | 34 | 164 | 445 |
| 08:45 AM | 22 | 170 | 192 | 51 | 11 | 62 | 117 | 52 | 169 | 423 |
| Total | 65 | 805 | 870 | 226 | 35 | 261 | 497 | 156 | 653 | 1784 |
| Grand Total | 133 | 1768 | 1901 | 535 | 91 | 626 | 1174 | 435 | 1609 | 4136 |
| Apprch % | 7 | 93 | | 85.5 | 14.5 | | 73 | 27 | | |
| Total % | 3.2 | 42.7 | 46 | 12.9 | 2.2 | 15.1 | 28.4 | 10.5 | 38.9 | |

| | Cedar Avenue Southbound | | | Bloomington Avenue Westbound | | | Cedar Avenue Northbound | | | |
|---|---|---|---|---|---|---|---|---|---|---|
| Start Time | Left | Thru | App. Total | Left | Right | App. Total | Thru | Right | App. Total | Int. Total |
| Peak Hour Analysis From 07:00 AM to 07:45 AM - Peak 1 of 1 | | | | | | | | | | |
| Peak Hour for Entire Intersection Begins at 07:00 AM | | | | | | | | | | |
| 07:00 AM | 13 | 240 | 253 | 63 | 6 | 69 | 150 | 67 | 217 | 539 |
| 07:15 AM | **23** | **265** | **288** | 71 | 7 | 78 | 165 | 72 | 237 | 603 |
| 07:30 AM | 15 | 252 | 267 | **92** | **34** | **126** | 170 | **81** | **251** | **644** |
| 07:45 AM | 17 | 206 | 223 | 83 | 9 | 92 | **192** | 59 | 251 | 566 |
| Total Volume | 68 | 963 | 1031 | 309 | 56 | 365 | 677 | 279 | 956 | 2352 |
| % App. Total | 6.6 | 93.4 | | 84.7 | 15.3 | | 70.8 | 29.2 | | |
| PHF | .739 | .908 | .895 | .840 | .412 | .724 | .882 | .861 | .952 | .913 |

Counts Unlimited, Inc.
PO Box 1178
Corona, CA 92878
(951) 268-6268

County of San Bernardino
N/S: Cedar Avenue
E/W: Bloomington Avenue
Weather: Clear

File Name : CSBCEBLAM
Site Code : 06714097
Start Date : 3/11/2014
Page No : 2

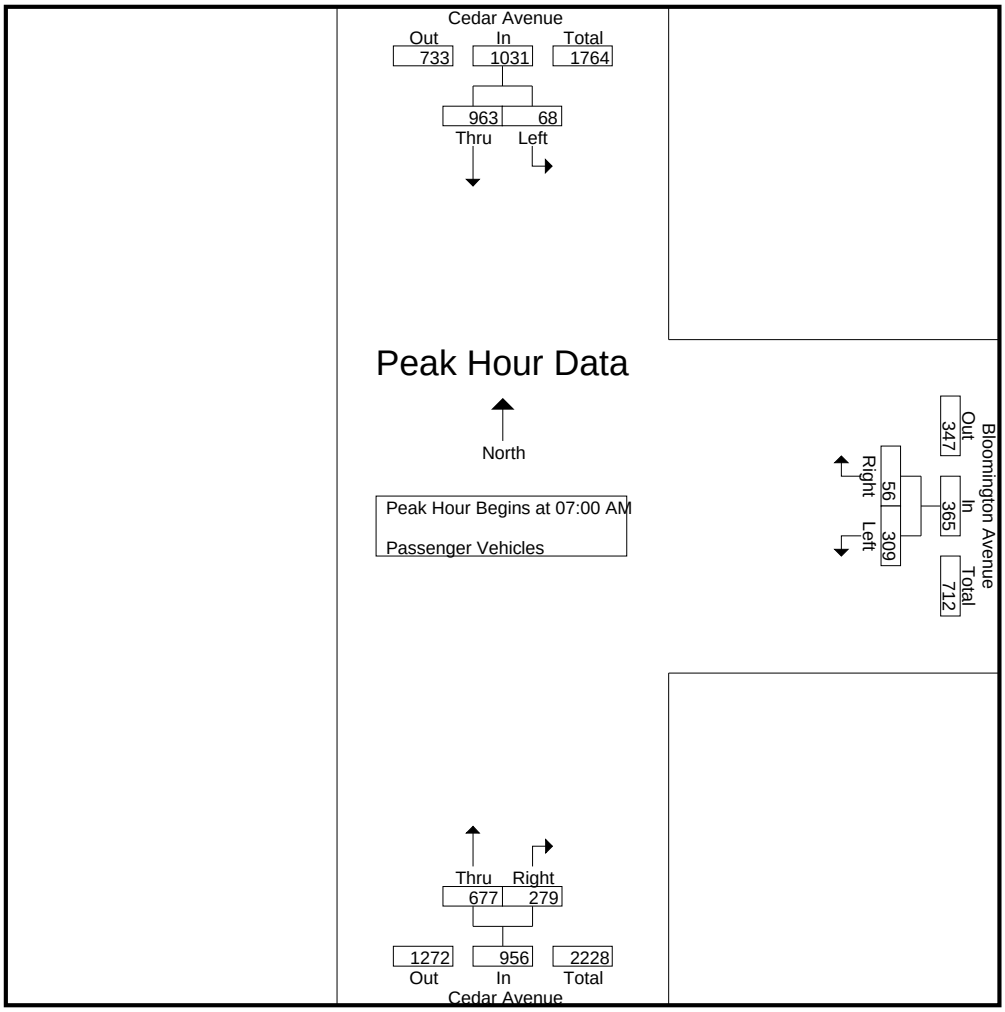


Peak Hour Analysis From 07:00 AM to 07:45 AM - Peak 1 of 1

Peak Hour for Each Approach Begins at:

| | 07:00 AM | | | 07:00 AM | | | 07:00 AM | | |
|---|---|---|---|---|---|---|---|---|---|
| +0 mins. | 13 | 240 | 253 | 63 | 6 | 69 | 150 | 67 | 217 |
| +15 mins. | **23** | **265** | **288** | 71 | 7 | 78 | 165 | 72 | 237 |
| +30 mins. | 15 | 252 | 267 | **92** | **34** | **126** | 170 | **81** | **251** |
| +45 mins. | 17 | 206 | 223 | 83 | 9 | 92 | **192** | 59 | 251 |
| Total Volume | 68 | 963 | 1031 | 309 | 56 | 365 | 677 | 279 | 956 |
| % App. Total | 6.6 | 93.4 | | 84.7 | 15.3 | | 70.8 | 29.2 | |
| PHF | .739 | .908 | .895 | .840 | .412 | .724 | .882 | .861 | .952 |

Counts Unlimited, Inc.
PO Box 1178
Corona, CA 92878
(951) 268-6268

County of San Bernardino
N/S: Cedar Avenue
E/W: Bloomington Avenue
Weather: Clear

File Name : CSBCEBLAM
Site Code : 06714097
Start Date : 3/11/2014
Page No : 1

Groups Printed- Large 2 Axle Vehicles

| | Cedar Avenue Southbound | | | Bloomington Avenue Westbound | | | Cedar Avenue Northbound | | | |
|---|---|---|---|---|---|---|---|---|---|---|
| Start Time | Left | Thru | App. Total | Left | Right | App. Total | Thru | Right | App. Total | Int. Total |
| 07:00 AM | 0 | 3 | 3 | 0 | 0 | 0 | 3 | 0 | 3 | 6 |
| 07:15 AM | 0 | 3 | 3 | 0 | 0 | 0 | 2 | 0 | 2 | 5 |
| 07:30 AM | 0 | 3 | 3 | 2 | 0 | 2 | 5 | 0 | 5 | 10 |
| 07:45 AM | 0 | 5 | 5 | 0 | 0 | 0 | 6 | 0 | 6 | 11 |
| Total | 0 | 14 | 14 | 2 | 0 | 2 | 16 | 0 | 16 | 32 |
| 08:00 AM | 0 | 4 | 4 | 0 | 0 | 0 | 5 | 0 | 5 | 9 |
| 08:15 AM | 0 | 5 | 5 | 1 | 1 | 2 | 3 | 0 | 3 | 10 |
| 08:30 AM | 0 | 6 | 6 | 2 | 0 | 2 | 3 | 0 | 3 | 11 |
| 08:45 AM | 1 | 6 | 7 | 0 | 0 | 0 | 5 | 0 | 5 | 12 |
| Total | 1 | 21 | 22 | 3 | 1 | 4 | 16 | 0 | 16 | 42 |
| Grand Total | 1 | 35 | 36 | 5 | 1 | 6 | 32 | 0 | 32 | 74 |
| Apprch % | 2.8 | 97.2 | | 83.3 | 16.7 | | 100 | 0 | | |
| Total % | 1.4 | 47.3 | 48.6 | 6.8 | 1.4 | 8.1 | 43.2 | 0 | 43.2 | |

| | Cedar Avenue Southbound | | | Bloomington Avenue Westbound | | | Cedar Avenue Northbound | | | |
|---|---|---|---|---|---|---|---|---|---|---|
| Start Time | Left | Thru | App. Total | Left | Right | App. Total | Thru | Right | App. Total | Int. Total |
| Peak Hour Analysis From 07:00 AM to 07:45 AM - Peak 1 of 1 | | | | | | | | | | |
| Peak Hour for Entire Intersection Begins at 07:00 AM | | | | | | | | | | |
| 07:00 AM | 0 | 3 | 3 | 0 | 0 | 0 | 3 | 0 | 3 | 6 |
| 07:15 AM | 0 | 3 | 3 | 0 | 0 | 0 | 2 | 0 | 2 | 5 |
| 07:30 AM | 0 | 3 | 3 | **2** | 0 | **2** | 5 | 0 | 5 | 10 |
| 07:45 AM | 0 | **5** | **5** | 0 | 0 | 0 | **6** | 0 | **6** | **11** |
| Total Volume | 0 | 14 | 14 | 2 | 0 | 2 | 16 | 0 | 16 | 32 |
| % App. Total | 0 | 100 | | 100 | 0 | | 100 | 0 | | |
| PHF | .000 | .700 | .700 | .250 | .000 | .250 | .667 | .000 | .667 | .727 |

Counts Unlimited, Inc.
PO Box 1178
Corona, CA 92878
(951) 268-6268

County of San Bernardino
N/S: Cedar Avenue
E/W: Bloomington Avenue
Weather: Clear

File Name : CSBCEBLAM
Site Code : 06714097
Start Date : 3/11/2014
Page No : 2

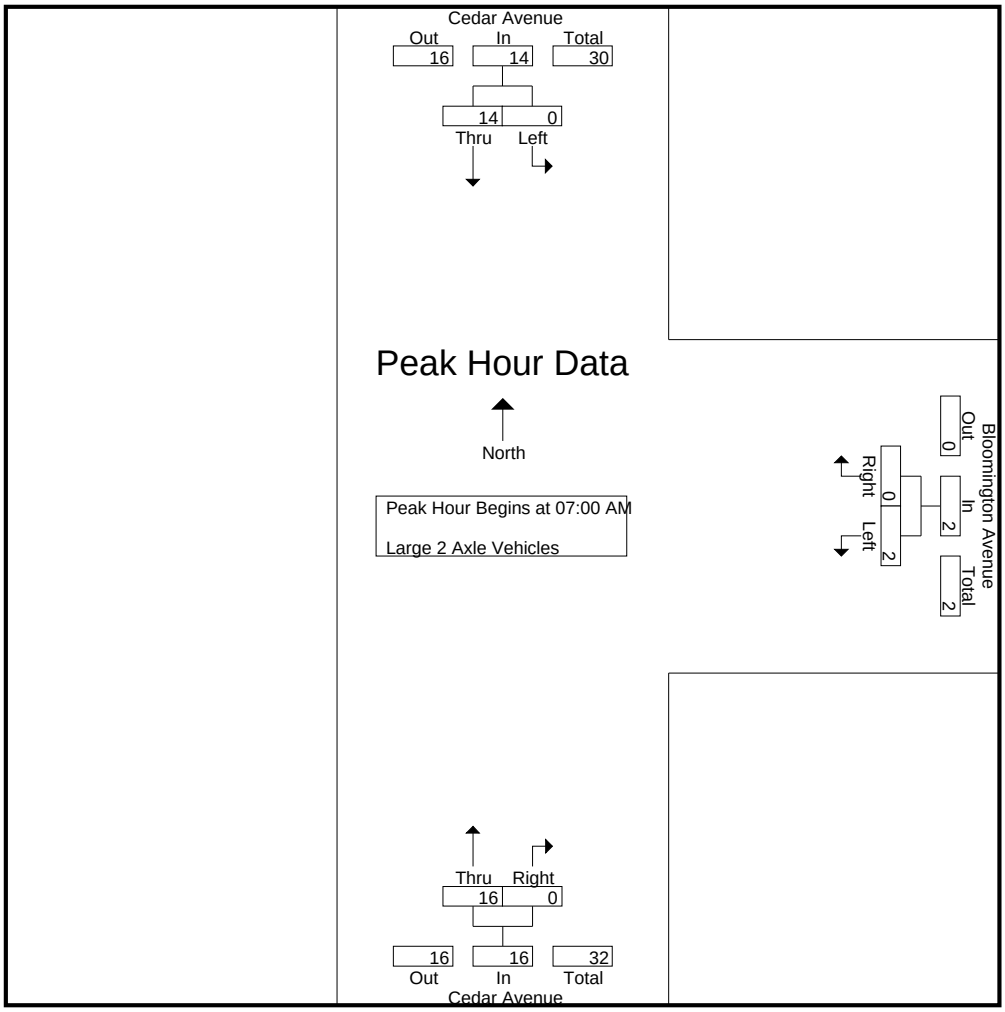


Peak Hour Analysis From 07:00 AM to 07:45 AM - Peak 1 of 1

Peak Hour for Each Approach Begins at:

| | 07:00 AM | | | 07:00 AM | | | 07:00 AM | | |
|---|---|---|---|---|---|---|---|---|---|
| +0 mins. | 0 | 3 | 3 | 0 | 0 | 0 | 3 | 0 | 3 |
| +15 mins. | 0 | 3 | 3 | 0 | 0 | 0 | 2 | 0 | 2 |
| +30 mins. | 0 | 3 | 3 | **2** | 0 | **2** | 5 | 0 | 5 |
| +45 mins. | 0 | **5** | **5** | 0 | 0 | 0 | **6** | 0 | **6** |
| Total Volume | 0 | 14 | 14 | 2 | 0 | 2 | 16 | 0 | 16 |
| % App. Total | 0 | 100 | | 100 | 0 | | 100 | 0 | |
| PHF | .000 | .700 | .700 | .250 | .000 | .250 | .667 | .000 | .667 |

Counts Unlimited, Inc.
PO Box 1178
Corona, CA 92878
(951) 268-6268

County of San Bernardino
N/S: Cedar Avenue
E/W: Bloomington Avenue
Weather: Clear

File Name : CSBCEBLAM
Site Code : 06714097
Start Date : 3/11/2014
Page No : 1

Groups Printed- 3 Axle Vehicles

| | Cedar Avenue Southbound | | | Bloomington Avenue Westbound | | | Cedar Avenue Northbound | | | |
|---|---|---|---|---|---|---|---|---|---|---|
| Start Time | Left | Thru | App. Total | Left | Right | App. Total | Thru | Right | App. Total | Int. Total |
| 07:00 AM | 0 | 0 | 0 | 0 | 0 | 0 | 4 | 2 | 6 | 6 |
| 07:15 AM | 0 | 4 | 4 | 0 | 0 | 0 | 2 | 0 | 2 | 6 |
| 07:30 AM | 0 | 1 | 1 | 0 | 0 | 0 | 2 | 0 | 2 | 3 |
| 07:45 AM | 0 | 1 | 1 | 0 | 0 | 0 | 1 | 1 | 2 | 3 |
| Total | 0 | 6 | 6 | 0 | 0 | 0 | 9 | 3 | 12 | 18 |
| 08:00 AM | 0 | 1 | 1 | 0 | 0 | 0 | 3 | 4 | 7 | 8 |
| 08:15 AM | 0 | 1 | 1 | 0 | 0 | 0 | 2 | 2 | 4 | 5 |
| 08:30 AM | 0 | 2 | 2 | 0 | 0 | 0 | 2 | 2 | 4 | 6 |
| 08:45 AM | 0 | 0 | 0 | 0 | 0 | 0 | 2 | 1 | 3 | 3 |
| Total | 0 | 4 | 4 | 0 | 0 | 0 | 9 | 9 | 18 | 22 |
| Grand Total | 0 | 10 | 10 | 0 | 0 | 0 | 18 | 12 | 30 | 40 |
| Apprch % | 0 | 100 | | 0 | 0 | | 60 | 40 | | |
| Total % | 0 | 25 | 25 | 0 | 0 | 0 | 45 | 30 | 75 | |

| | Cedar Avenue Southbound | | | Bloomington Avenue Westbound | | | Cedar Avenue Northbound | | | |
|---|---|---|---|---|---|---|---|---|---|---|
| Start Time | Left | Thru | App. Total | Left | Right | App. Total | Thru | Right | App. Total | Int. Total |
| Peak Hour Analysis From 07:00 AM to 07:45 AM - Peak 1 of 1 | | | | | | | | | | |
| Peak Hour for Entire Intersection Begins at 07:00 AM | | | | | | | | | | |
| 07:00 AM | 0 | 0 | 0 | 0 | 0 | 0 | **4** | **2** | **6** | **6** |
| 07:15 AM | 0 | **4** | **4** | 0 | 0 | 0 | 2 | 0 | 2 | 6 |
| 07:30 AM | 0 | 1 | 1 | 0 | 0 | 0 | 2 | 0 | 2 | 3 |
| 07:45 AM | 0 | 1 | 1 | 0 | 0 | 0 | 1 | 1 | 2 | 3 |
| Total Volume | 0 | 6 | 6 | 0 | 0 | 0 | 9 | 3 | 12 | 18 |
| % App. Total | 0 | 100 | | 0 | 0 | | 75 | 25 | | |
| PHF | .000 | .375 | .375 | .000 | .000 | .000 | .563 | .375 | .500 | .750 |

Counts Unlimited, Inc.
PO Box 1178
Corona, CA 92878
(951) 268-6268

County of San Bernardino
N/S: Cedar Avenue
E/W: Bloomington Avenue
Weather: Clear

File Name : CSBCEBLAM
Site Code : 06714097
Start Date : 3/11/2014
Page No : 2

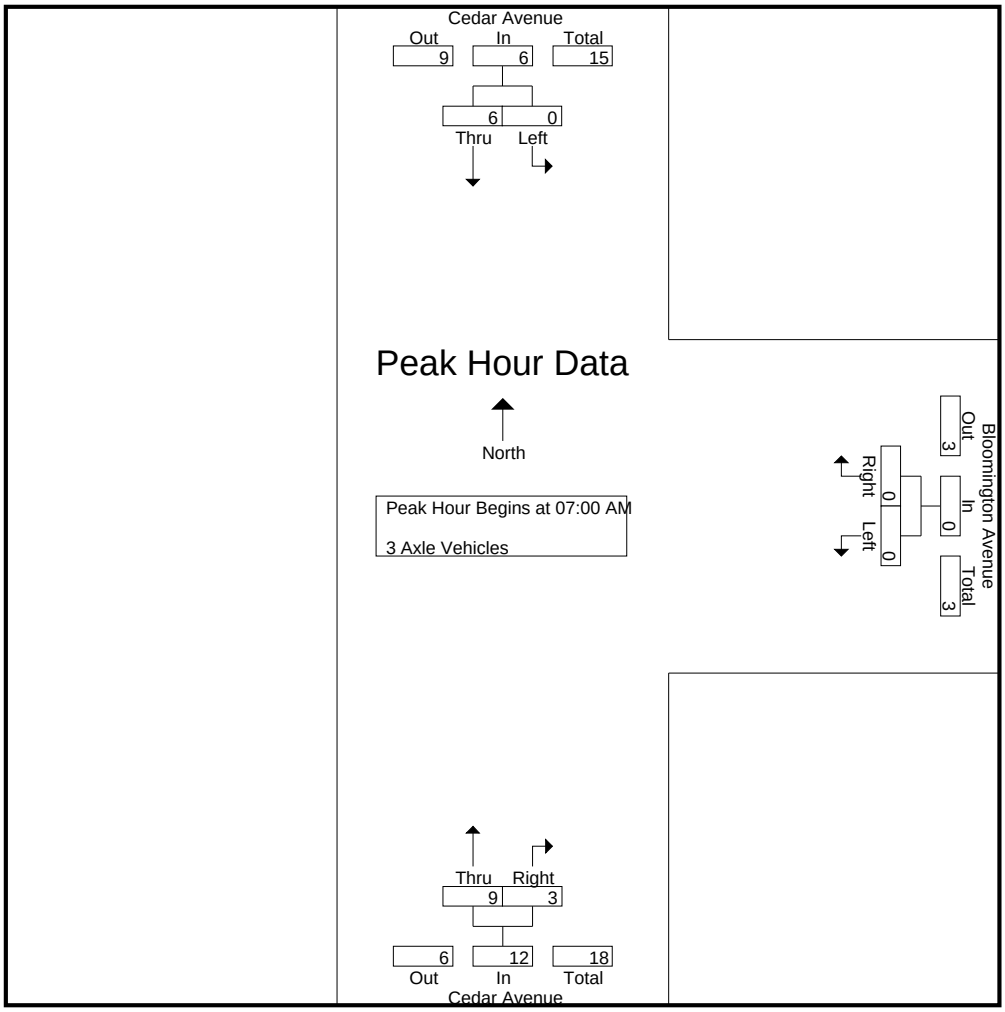


Peak Hour Analysis From 07:00 AM to 07:45 AM - Peak 1 of 1

Peak Hour for Each Approach Begins at:

| | 07:00 AM | | | 07:00 AM | | | 07:00 AM | | |
|---|---|---|---|---|---|---|---|---|---|
| +0 mins. | 0 | 0 | 0 | 0 | 0 | 0 | **4** | **2** | **6** |
| +15 mins. | 0 | **4** | **4** | 0 | 0 | 0 | 2 | 0 | 2 |
| +30 mins. | 0 | 1 | 1 | 0 | 0 | 0 | 2 | 0 | 2 |
| +45 mins. | 0 | 1 | 1 | 0 | 0 | 0 | 1 | 1 | 2 |
| Total Volume | 0 | 6 | 6 | 0 | 0 | 0 | 9 | 3 | 12 |
| % App. Total | 0 | 100 | | 0 | 0 | | 75 | 25 | |
| PHF | .000 | .375 | .375 | .000 | .000 | .000 | .563 | .375 | .500 |

Counts Unlimited, Inc.
PO Box 1178
Corona, CA 92878
(951) 268-6268

County of San Bernardino
N/S: Cedar Avenue
E/W: Bloomington Avenue
Weather: Clear

File Name : CSBCEBLAM
Site Code : 06714097
Start Date : 3/11/2014
Page No : 1

Groups Printed- 4+ Axle Trucks

| | Cedar Avenue Southbound | | | Bloomington Avenue Westbound | | | Cedar Avenue Northbound | | | |
|---|---|---|---|---|---|---|---|---|---|---|
| Start Time | Left | Thru | App. Total | Left | Right | App. Total | Thru | Right | App. Total | Int. Total |
| 07:00 AM | 0 | 5 | 5 | 1 | 0 | 1 | 7 | 0 | 7 | 13 |
| 07:15 AM | 0 | 7 | 7 | 0 | 0 | 0 | 8 | 0 | 8 | 15 |
| 07:30 AM | 0 | 5 | 5 | 3 | 0 | 3 | 2 | 0 | 2 | 10 |
| 07:45 AM | 0 | 6 | 6 | 0 | 0 | 0 | 5 | 0 | 5 | 11 |
| Total | 0 | 23 | 23 | 4 | 0 | 4 | 22 | 0 | 22 | 49 |
| 08:00 AM | 0 | 9 | 9 | 1 | 0 | 1 | 3 | 0 | 3 | 13 |
| 08:15 AM | 0 | 12 | 12 | 0 | 1 | 1 | 6 | 0 | 6 | 19 |
| 08:30 AM | 0 | 3 | 3 | 0 | 0 | 0 | 3 | 0 | 3 | 6 |
| 08:45 AM | 0 | 7 | 7 | 0 | 0 | 0 | 3 | 2 | 5 | 12 |
| Total | 0 | 31 | 31 | 1 | 1 | 2 | 15 | 2 | 17 | 50 |
| Grand Total | 0 | 54 | 54 | 5 | 1 | 6 | 37 | 2 | 39 | 99 |
| Apprch % | 0 | 100 | | 83.3 | 16.7 | | 94.9 | 5.1 | | |
| Total % | 0 | 54.5 | 54.5 | 5.1 | 1 | 6.1 | 37.4 | 2 | 39.4 | |

| | Cedar Avenue Southbound | | | Bloomington Avenue Westbound | | | Cedar Avenue Northbound | | | |
|---|---|---|---|---|---|---|---|---|---|---|
| Start Time | Left | Thru | App. Total | Left | Right | App. Total | Thru | Right | App. Total | Int. Total |
| Peak Hour Analysis From 07:00 AM to 07:45 AM - Peak 1 of 1 | | | | | | | | | | |
| Peak Hour for Entire Intersection Begins at 07:00 AM | | | | | | | | | | |
| 07:00 AM | 0 | 5 | 5 | 1 | 0 | 1 | 7 | 0 | 7 | 13 |
| 07:15 AM | 0 | **7** | **7** | 0 | 0 | 0 | **8** | 0 | **8** | **15** |
| 07:30 AM | 0 | 5 | 5 | **3** | 0 | **3** | 2 | 0 | 2 | 10 |
| 07:45 AM | 0 | 6 | 6 | 0 | 0 | 0 | 5 | 0 | 5 | 11 |
| Total Volume | 0 | 23 | 23 | 4 | 0 | 4 | 22 | 0 | 22 | 49 |
| % App. Total | 0 | 100 | | 100 | 0 | | 100 | 0 | | |
| PHF | .000 | .821 | .821 | .333 | .000 | .333 | .688 | .000 | .688 | .817 |

Counts Unlimited, Inc.
PO Box 1178
Corona, CA 92878
(951) 268-6268

County of San Bernardino
N/S: Cedar Avenue
E/W: Bloomington Avenue
Weather: Clear

File Name : CSBCEBLAM
Site Code : 06714097
Start Date : 3/11/2014
Page No : 2

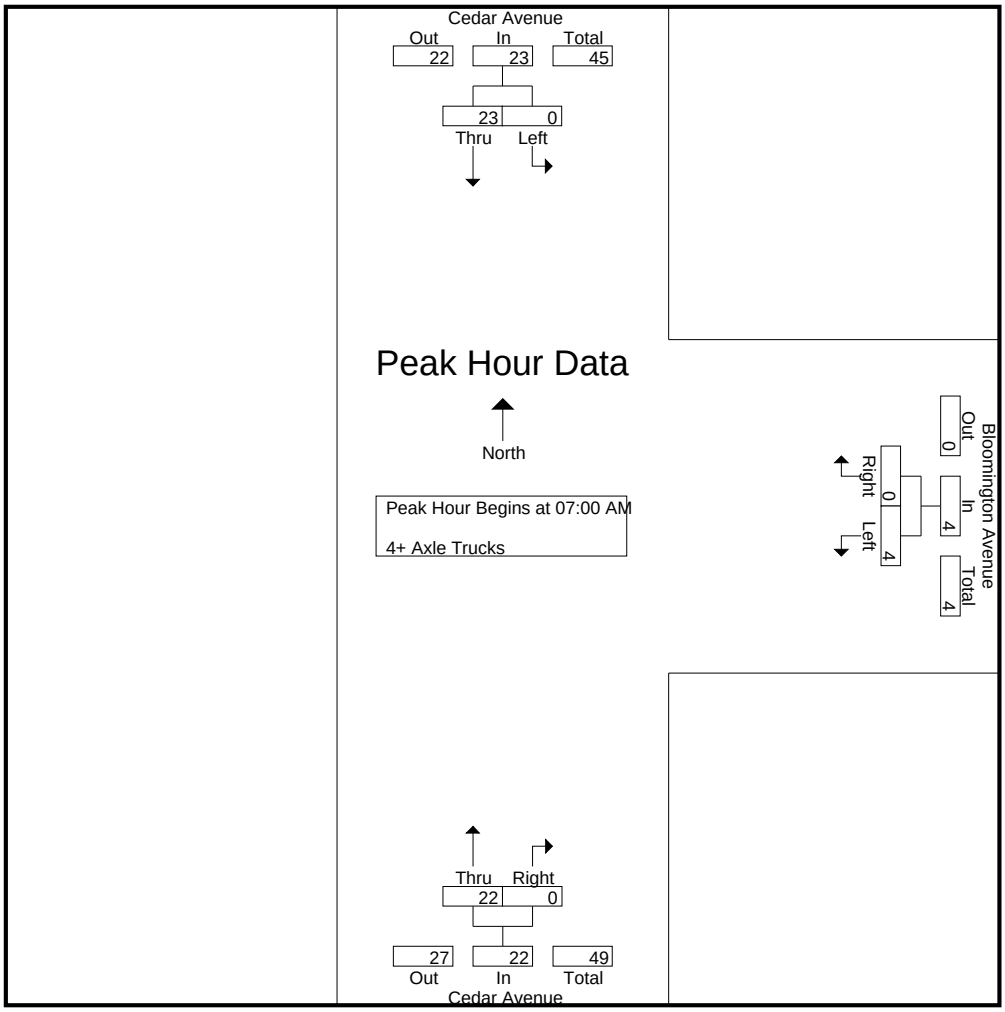


Peak Hour Analysis From 07:00 AM to 07:45 AM - Peak 1 of 1

Peak Hour for Each Approach Begins at:

| | 07:00 AM | | | 07:00 AM | | | 07:00 AM | | |
|---|---|---|---|---|---|---|---|---|---|
| +0 mins. | 0 | 5 | 5 | 1 | 0 | 1 | 7 | 0 | 7 |
| +15 mins. | 0 | **7** | **7** | 0 | 0 | 0 | **8** | 0 | **8** |
| +30 mins. | 0 | 5 | 5 | **3** | 0 | **3** | 2 | 0 | 2 |
| +45 mins. | 0 | 6 | 6 | 0 | 0 | 0 | 5 | 0 | 5 |
| Total Volume | 0 | 23 | 23 | 4 | 0 | 4 | 22 | 0 | 22 |
| % App. Total | 0 | 100 | | 100 | 0 | | 100 | 0 | |
| PHF | .000 | .821 | .821 | .333 | .000 | .333 | .688 | .000 | .688 |

Counts Unlimited, Inc.
PO Box 1178
Corona, CA 92878
(951) 268-6268

County of San Bernardino
N/S: Cedar Avenue
E/W: Bloomington Avenue
Weather: Clear

File Name : CSBCEBLPM
Site Code : 06714097
Start Date : 3/11/2014
Page No : 1

Groups Printed- Passenger Vehicles - Large 2 Axle Vehicles - 3 Axle Vehicles - 4+ Axle Trucks

| | Cedar Avenue Southbound | | | Bloomington Avenue Westbound | | | Cedar Avenue Northbound | | | |
|---|---|---|---|---|---|---|---|---|---|---|
| Start Time | Left | Thru | App. Total | Left | Right | App. Total | Thru | Right | App. Total | Int. Total |
| 04:00 PM | 24 | 202 | 226 | 76 | 17 | 93 | 257 | 94 | 351 | 670 |
| 04:15 PM | 14 | 166 | 180 | 73 | 16 | 89 | 239 | 112 | 351 | 620 |
| 04:30 PM | 13 | 182 | 195 | 73 | 10 | 83 | 220 | 126 | 346 | 624 |
| 04:45 PM | 24 | 199 | 223 | 54 | 11 | 65 | 243 | 107 | 350 | 638 |
| Total | 75 | 749 | 824 | 276 | 54 | 330 | 959 | 439 | 1398 | 2552 |
| 05:00 PM | 17 | 186 | 203 | 52 | 15 | 67 | 245 | 86 | 331 | 601 |
| 05:15 PM | 22 | 168 | 190 | 80 | 23 | 103 | 250 | 130 | 380 | 673 |
| 05:30 PM | 12 | 169 | 181 | 70 | 16 | 86 | 215 | 106 | 321 | 588 |
| 05:45 PM | 22 | 173 | 195 | 62 | 12 | 74 | 257 | 87 | 344 | 613 |
| Total | 73 | 696 | 769 | 264 | 66 | 330 | 967 | 409 | 1376 | 2475 |
| Grand Total | 148 | 1445 | 1593 | 540 | 120 | 660 | 1926 | 848 | 2774 | 5027 |
| Apprch % | 9.3 | 90.7 | | 81.8 | 18.2 | | 69.4 | 30.6 | | |
| Total % | 2.9 | 28.7 | 31.7 | 10.7 | 2.4 | 13.1 | 38.3 | 16.9 | 55.2 | |
| Passenger Vehicles | 148 | 1379 | 1527 | 528 | 120 | 648 | 1864 | 833 | 2697 | 4872 |
| % Passenger Vehicles | 100 | 95.4 | 95.9 | 97.8 | 100 | 98.2 | 96.8 | 98.2 | 97.2 | 96.9 |
| Large 2 Axle Vehicles | 0 | 21 | 21 | 9 | 0 | 9 | 19 | 9 | 28 | 58 |
| % Large 2 Axle Vehicles | 0 | 1.5 | 1.3 | 1.7 | 0 | 1.4 | 1 | 1.1 | 1 | 1.2 |
| 3 Axle Vehicles | 0 | 19 | 19 | 1 | 0 | 1 | 9 | 3 | 12 | 32 |
| % 3 Axle Vehicles | 0 | 1.3 | 1.2 | 0.2 | 0 | 0.2 | 0.5 | 0.4 | 0.4 | 0.6 |
| 4+ Axle Trucks | 0 | 26 | 26 | 2 | 0 | 2 | 34 | 3 | 37 | 65 |
| % 4+ Axle Trucks | 0 | 1.8 | 1.6 | 0.4 | 0 | 0.3 | 1.8 | 0.4 | 1.3 | 1.3 |

| | Cedar Avenue Southbound | | | Bloomington Avenue Westbound | | | Cedar Avenue Northbound | | | |
|---|---|---|---|---|---|---|---|---|---|---|
| Start Time | Left | Thru | App. Total | Left | Right | App. Total | Thru | Right | App. Total | Int. Total |
| Peak Hour Analysis From 04:00 PM to 05:45 PM - Peak 1 of 1 | | | | | | | | | | |
| Peak Hour for Entire Intersection Begins at 04:00 PM | | | | | | | | | | |
| 04:00 PM | **24** | **202** | **226** | **76** | **17** | **93** | **257** | 94 | **351** | **670** |
| 04:15 PM | 14 | 166 | 180 | 73 | 16 | 89 | 239 | 112 | 351 | 620 |
| 04:30 PM | 13 | 182 | 195 | 73 | 10 | 83 | 220 | **126** | 346 | 624 |
| 04:45 PM | 24 | 199 | 223 | 54 | 11 | 65 | 243 | 107 | 350 | 638 |
| Total Volume | 75 | 749 | 824 | 276 | 54 | 330 | 959 | 439 | 1398 | 2552 |
| % App. Total | 9.1 | 90.9 | | 83.6 | 16.4 | | 68.6 | 31.4 | | |
| PHF | .781 | .927 | .912 | .908 | .794 | .887 | .933 | .871 | .996 | .952 |

Counts Unlimited, Inc.
PO Box 1178
Corona, CA 92878
(951) 268-6268

County of San Bernardino
N/S: Cedar Avenue
E/W: Bloomington Avenue
Weather: Clear

File Name : CSBCEBLPM
Site Code : 06714097
Start Date : 3/11/2014
Page No : 2

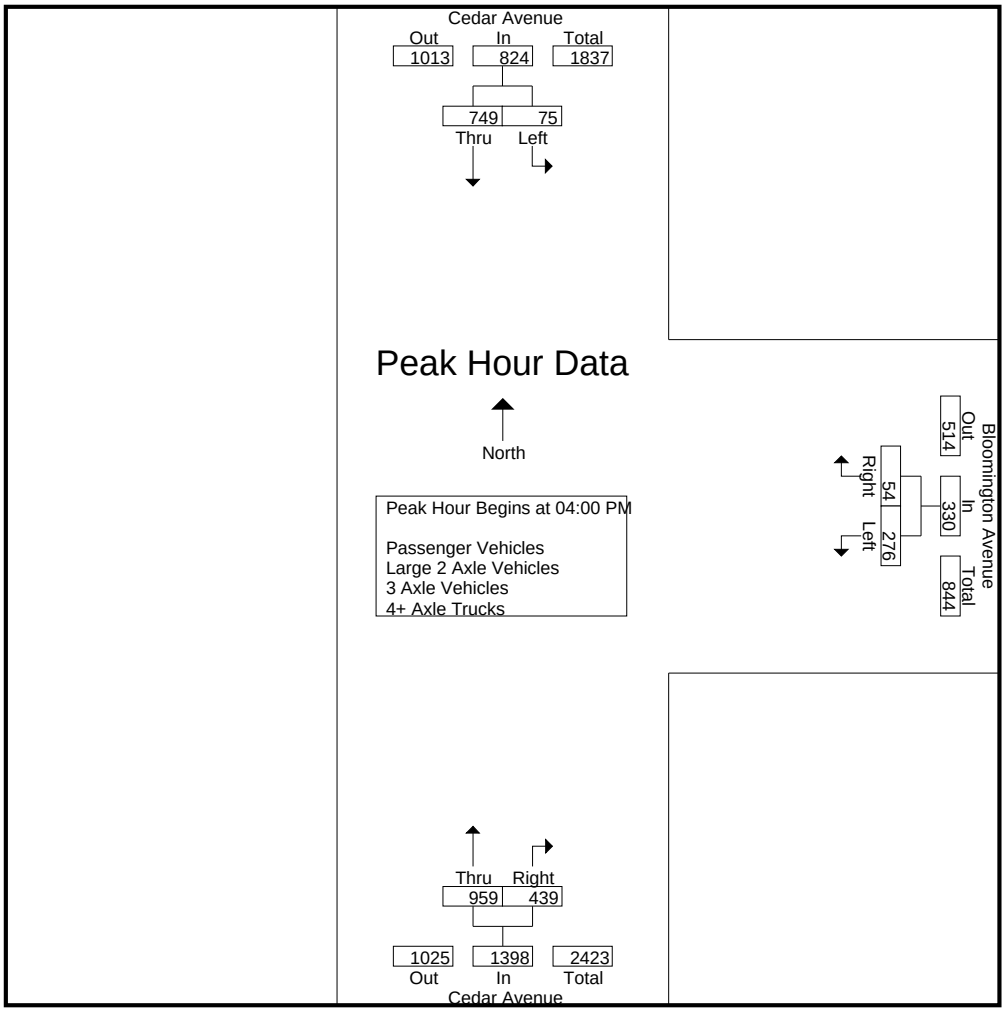


Peak Hour Analysis From 04:00 PM to 05:45 PM - Peak 1 of 1

Peak Hour for Each Approach Begins at:

| | 04:00 PM | | | 04:00 PM | | | 04:30 PM | | |
|---|---|---|---|---|---|---|---|---|---|
| +0 mins. | **24** | **202** | **226** | **76** | **17** | **93** | 220 | 126 | 346 |
| +15 mins. | 14 | 166 | 180 | 73 | 16 | 89 | 243 | 107 | 350 |
| +30 mins. | 13 | 182 | 195 | 73 | 10 | 83 | 245 | 86 | 331 |
| +45 mins. | 24 | 199 | 223 | 54 | 11 | 65 | **250** | **130** | **380** |
| Total Volume | 75 | 749 | 824 | 276 | 54 | 330 | 958 | 449 | 1407 |
| % App. Total | 9.1 | 90.9 | | 83.6 | 16.4 | | 68.1 | 31.9 | |
| PHF | .781 | .927 | .912 | .908 | .794 | .887 | .958 | .863 | .926 |

Counts Unlimited, Inc.
PO Box 1178
Corona, CA 92878
(951) 268-6268

County of San Bernardino
N/S: Cedar Avenue
E/W: Bloomington Avenue
Weather: Clear

File Name : CSBCEBLPM
Site Code : 06714097
Start Date : 3/11/2014
Page No : 1

Groups Printed- Passenger Vehicles

| | Cedar Avenue Southbound | | | Bloomington Avenue Westbound | | | Cedar Avenue Northbound | | | |
|---|---|---|---|---|---|---|---|---|---|---|
| Start Time | Left | Thru | App. Total | Left | Right | App. Total | Thru | Right | App. Total | Int. Total |
| 04:00 PM | 24 | 194 | 218 | 75 | 17 | 92 | 249 | 91 | 340 | 650 |
| 04:15 PM | 14 | 155 | 169 | 72 | 16 | 88 | 228 | 111 | 339 | 596 |
| 04:30 PM | 13 | 173 | 186 | 72 | 10 | 82 | 212 | 122 | 334 | 602 |
| 04:45 PM | 24 | 189 | 213 | 52 | 11 | 63 | 237 | 104 | 341 | 617 |
| Total | 75 | 711 | 786 | 271 | 54 | 325 | 926 | 428 | 1354 | 2465 |
| 05:00 PM | 17 | 174 | 191 | 51 | 15 | 66 | 237 | 85 | 322 | 579 |
| 05:15 PM | 22 | 162 | 184 | 76 | 23 | 99 | 244 | 129 | 373 | 656 |
| 05:30 PM | 12 | 163 | 175 | 69 | 16 | 85 | 208 | 105 | 313 | 573 |
| 05:45 PM | 22 | 169 | 191 | 61 | 12 | 73 | 249 | 86 | 335 | 599 |
| Total | 73 | 668 | 741 | 257 | 66 | 323 | 938 | 405 | 1343 | 2407 |
| Grand Total | 148 | 1379 | 1527 | 528 | 120 | 648 | 1864 | 833 | 2697 | 4872 |
| Apprch % | 9.7 | 90.3 | | 81.5 | 18.5 | | 69.1 | 30.9 | | |
| Total % | 3 | 28.3 | 31.3 | 10.8 | 2.5 | 13.3 | 38.3 | 17.1 | 55.4 | |

| | Cedar Avenue Southbound | | | Bloomington Avenue Westbound | | | Cedar Avenue Northbound | | | |
|---|---|---|---|---|---|---|---|---|---|---|
| Start Time | Left | Thru | App. Total | Left | Right | App. Total | Thru | Right | App. Total | Int. Total |
| Peak Hour Analysis From 04:00 PM to 04:45 PM - Peak 1 of 1 | | | | | | | | | | |
| Peak Hour for Entire Intersection Begins at 04:00 PM | | | | | | | | | | |
| 04:00 PM | **24** | **194** | **218** | **75** | **17** | **92** | **249** | 91 | 340 | **650** |
| 04:15 PM | 14 | 155 | 169 | 72 | 16 | 88 | 228 | 111 | 339 | 596 |
| 04:30 PM | 13 | 173 | 186 | 72 | 10 | 82 | 212 | **122** | 334 | 602 |
| 04:45 PM | 24 | 189 | 213 | 52 | 11 | 63 | 237 | 104 | **341** | 617 |
| Total Volume | 75 | 711 | 786 | 271 | 54 | 325 | 926 | 428 | 1354 | 2465 |
| % App. Total | 9.5 | 90.5 | | 83.4 | 16.6 | | 68.4 | 31.6 | | |
| PHF | .781 | .916 | .901 | .903 | .794 | .883 | .930 | .877 | .993 | .948 |

Counts Unlimited, Inc.
PO Box 1178
Corona, CA 92878
(951) 268-6268

County of San Bernardino
N/S: Cedar Avenue
E/W: Bloomington Avenue
Weather: Clear

File Name : CSBCEBLPM
Site Code : 06714097
Start Date : 3/11/2014
Page No : 2

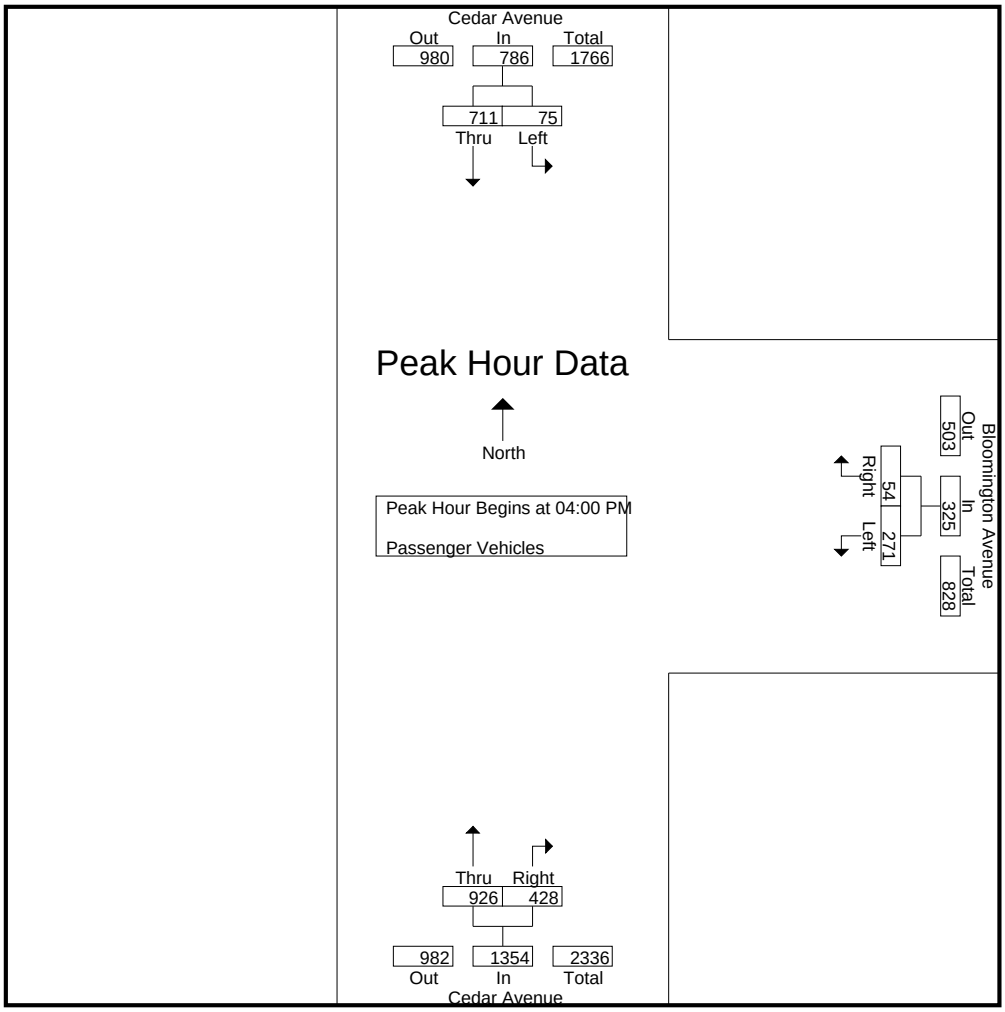


Peak Hour Analysis From 04:00 PM to 04:45 PM - Peak 1 of 1

Peak Hour for Each Approach Begins at:

| | 04:00 PM | | | 04:00 PM | | | 04:00 PM | | |
|---|---|---|---|---|---|---|---|---|---|
| +0 mins. | **24** | **194** | **218** | **75** | **17** | **92** | **249** | 91 | 340 |
| +15 mins. | 14 | 155 | 169 | 72 | 16 | 88 | 228 | 111 | 339 |
| +30 mins. | 13 | 173 | 186 | 72 | 10 | 82 | 212 | **122** | 334 |
| +45 mins. | 24 | 189 | 213 | 52 | 11 | 63 | 237 | 104 | **341** |
| Total Volume | 75 | 711 | 786 | 271 | 54 | 325 | 926 | 428 | 1354 |
| % App. Total | 9.5 | 90.5 | | 83.4 | 16.6 | | 68.4 | 31.6 | |
| PHF | .781 | .916 | .901 | .903 | .794 | .883 | .930 | .877 | .993 |

Counts Unlimited, Inc.
PO Box 1178
Corona, CA 92878
(951) 268-6268

County of San Bernardino
N/S: Cedar Avenue
E/W: Bloomington Avenue
Weather: Clear

File Name : CSBCEBLPM
Site Code : 06714097
Start Date : 3/11/2014
Page No : 1

Groups Printed- Large 2 Axle Vehicles

| | Cedar Avenue Southbound | | | Bloomington Avenue Westbound | | | Cedar Avenue Northbound | | | |
|---|---|---|---|---|---|---|---|---|---|---|
| Start Time | Left | Thru | App. Total | Left | Right | App. Total | Thru | Right | App. Total | Int. Total |
| 04:00 PM | 0 | 4 | 4 | 1 | 0 | 1 | 3 | 1 | 4 | 9 |
| 04:15 PM | 0 | 3 | 3 | 1 | 0 | 1 | 4 | 1 | 5 | 9 |
| 04:30 PM | 0 | 4 | 4 | 1 | 0 | 1 | 2 | 3 | 5 | 10 |
| 04:45 PM | 0 | 2 | 2 | 1 | 0 | 1 | 1 | 1 | 2 | 5 |
| Total | 0 | 13 | 13 | 4 | 0 | 4 | 10 | 6 | 16 | 33 |
| 05:00 PM | 0 | 1 | 1 | 0 | 0 | 0 | 4 | 0 | 4 | 5 |
| 05:15 PM | 0 | 1 | 1 | 4 | 0 | 4 | 2 | 1 | 3 | 8 |
| 05:30 PM | 0 | 3 | 3 | 0 | 0 | 0 | 0 | 1 | 1 | 4 |
| 05:45 PM | 0 | 3 | 3 | 1 | 0 | 1 | 3 | 1 | 4 | 8 |
| Total | 0 | 8 | 8 | 5 | 0 | 5 | 9 | 3 | 12 | 25 |
| Grand Total | 0 | 21 | 21 | 9 | 0 | 9 | 19 | 9 | 28 | 58 |
| Apprch % | 0 | 100 | | 100 | 0 | | 67.9 | 32.1 | | |
| Total % | 0 | 36.2 | 36.2 | 15.5 | 0 | 15.5 | 32.8 | 15.5 | 48.3 | |

| | Cedar Avenue Southbound | | | Bloomington Avenue Westbound | | | Cedar Avenue Northbound | | | |
|---|---|---|---|---|---|---|---|---|---|---|
| Start Time | Left | Thru | App. Total | Left | Right | App. Total | Thru | Right | App. Total | Int. Total |
| Peak Hour Analysis From 04:00 PM to 04:45 PM - Peak 1 of 1 | | | | | | | | | | |
| Peak Hour for Entire Intersection Begins at 04:00 PM | | | | | | | | | | |
| 04:00 PM | 0 | **4** | **4** | **1** | 0 | **1** | 3 | 1 | 4 | 9 |
| 04:15 PM | 0 | 3 | 3 | 1 | 0 | 1 | **4** | 1 | **5** | 9 |
| 04:30 PM | 0 | 4 | 4 | 1 | 0 | 1 | 2 | **3** | 5 | **10** |
| 04:45 PM | 0 | 2 | 2 | 1 | 0 | 1 | 1 | 1 | 2 | 5 |
| Total Volume | 0 | 13 | 13 | 4 | 0 | 4 | 10 | 6 | 16 | 33 |
| % App. Total | 0 | 100 | | 100 | 0 | | 62.5 | 37.5 | | |
| PHF | .000 | .813 | .813 | 1.00 | .000 | 1.00 | .625 | .500 | .800 | .825 |

Counts Unlimited, Inc.
PO Box 1178
Corona, CA 92878
(951) 268-6268

County of San Bernardino
N/S: Cedar Avenue
E/W: Bloomington Avenue
Weather: Clear

File Name : CSBCEBLPM
Site Code : 06714097
Start Date : 3/11/2014
Page No : 2

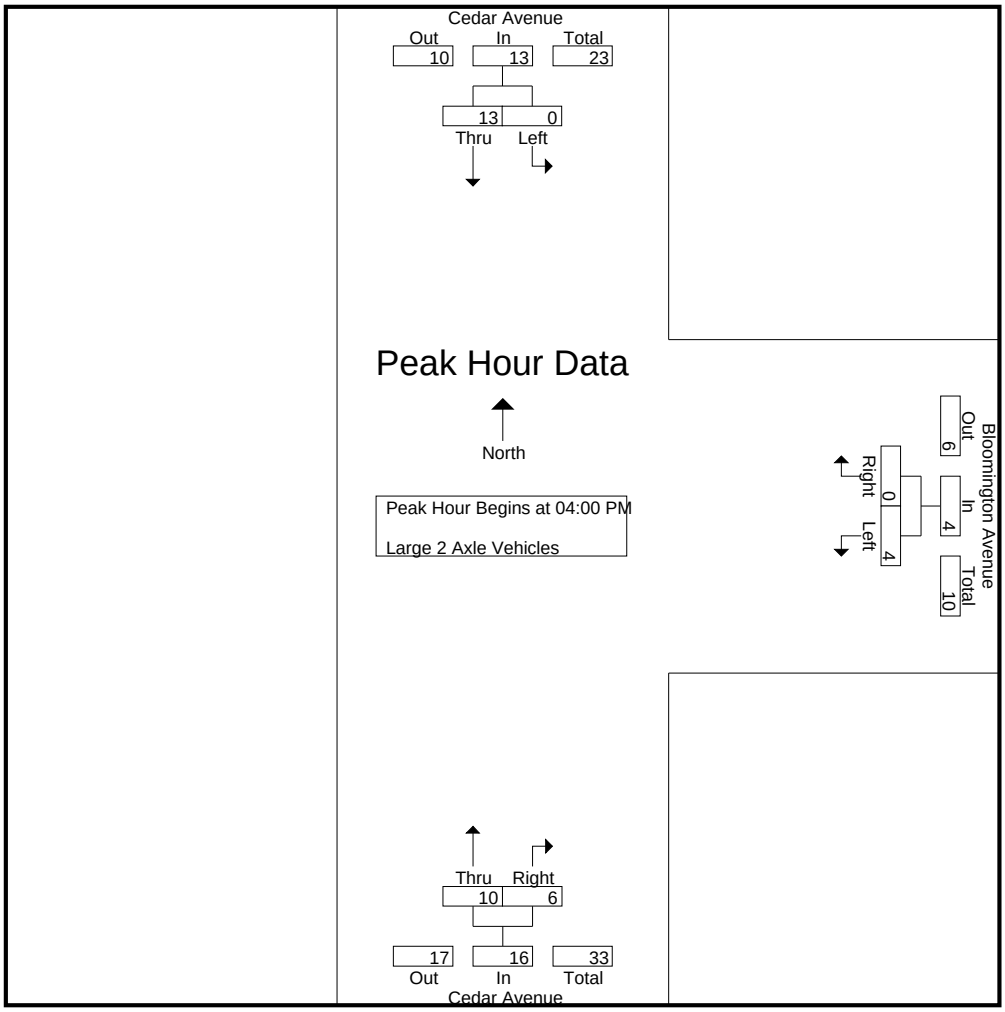


Peak Hour Analysis From 04:00 PM to 04:45 PM - Peak 1 of 1

Peak Hour for Each Approach Begins at:

| | 04:00 PM | | | 04:00 PM | | | 04:00 PM | | |
|---|---|---|---|---|---|---|---|---|---|
| +0 mins. | 0 | **4** | **4** | **1** | 0 | **1** | 3 | 1 | 4 |
| +15 mins. | 0 | 3 | 3 | 1 | 0 | 1 | **4** | 1 | **5** |
| +30 mins. | 0 | 4 | 4 | 1 | 0 | 1 | 2 | **3** | 5 |
| +45 mins. | 0 | 2 | 2 | 1 | 0 | 1 | 1 | 1 | 2 |
| Total Volume | 0 | 13 | 13 | 4 | 0 | 4 | 10 | 6 | 16 |
| % App. Total | 0 | 100 | | 100 | 0 | | 62.5 | 37.5 | |
| PHF | .000 | .813 | .813 | 1.000 | .000 | 1.000 | .625 | .500 | .800 |

Counts Unlimited, Inc.
PO Box 1178
Corona, CA 92878
(951) 268-6268

County of San Bernardino
N/S: Cedar Avenue
E/W: Bloomington Avenue
Weather: Clear

File Name : CSBCEBLPM
Site Code : 06714097
Start Date : 3/11/2014
Page No : 1

Groups Printed- 3 Axle Vehicles

| | Cedar Avenue Southbound | | | Bloomington Avenue Westbound | | | Cedar Avenue Northbound | | | |
|---|---|---|---|---|---|---|---|---|---|---|
| Start Time | Left | Thru | App. Total | Left | Right | App. Total | Thru | Right | App. Total | Int. Total |
| 04:00 PM | 0 | 1 | 1 | 0 | 0 | 0 | 0 | 0 | 0 | 1 |
| 04:15 PM | 0 | 3 | 3 | 0 | 0 | 0 | 0 | 0 | 0 | 3 |
| 04:30 PM | 0 | 2 | 2 | 0 | 0 | 0 | 1 | 1 | 2 | 4 |
| 04:45 PM | 0 | 4 | 4 | 0 | 0 | 0 | 3 | 2 | 5 | 9 |
| Total | 0 | 10 | 10 | 0 | 0 | 0 | 4 | 3 | 7 | 17 |
| 05:00 PM | 0 | 7 | 7 | 1 | 0 | 1 | 2 | 0 | 2 | 10 |
| 05:15 PM | 0 | 0 | 0 | 0 | 0 | 0 | 0 | 0 | 0 | 0 |
| 05:30 PM | 0 | 1 | 1 | 0 | 0 | 0 | 2 | 0 | 2 | 3 |
| 05:45 PM | 0 | 1 | 1 | 0 | 0 | 0 | 1 | 0 | 1 | 2 |
| Total | 0 | 9 | 9 | 1 | 0 | 1 | 5 | 0 | 5 | 15 |
| Grand Total | 0 | 19 | 19 | 1 | 0 | 1 | 9 | 3 | 12 | 32 |
| Apprch % | 0 | 100 | | 100 | 0 | | 75 | 25 | | |
| Total % | 0 | 59.4 | 59.4 | 3.1 | 0 | 3.1 | 28.1 | 9.4 | 37.5 | |

| | Cedar Avenue Southbound | | | Bloomington Avenue Westbound | | | Cedar Avenue Northbound | | | |
|---|---|---|---|---|---|---|---|---|---|---|
| Start Time | Left | Thru | App. Total | Left | Right | App. Total | Thru | Right | App. Total | Int. Total |
| Peak Hour Analysis From 04:00 PM to 04:45 PM - Peak 1 of 1 | | | | | | | | | | |
| Peak Hour for Entire Intersection Begins at 04:00 PM | | | | | | | | | | |
| 04:00 PM | 0 | 1 | 1 | 0 | 0 | 0 | 0 | 0 | 0 | 1 |
| 04:15 PM | 0 | 3 | 3 | 0 | 0 | 0 | 0 | 0 | 0 | 3 |
| 04:30 PM | 0 | 2 | 2 | 0 | 0 | 0 | 1 | 1 | 2 | 4 |
| 04:45 PM | 0 | **4** | **4** | 0 | 0 | 0 | **3** | **2** | **5** | **9** |
| Total Volume | 0 | 10 | 10 | 0 | 0 | 0 | 4 | 3 | 7 | 17 |
| % App. Total | 0 | 100 | | 0 | 0 | | 57.1 | 42.9 | | |
| PHF | .000 | .625 | .625 | .000 | .000 | .000 | .333 | .375 | .350 | .472 |

Counts Unlimited, Inc.
PO Box 1178
Corona, CA 92878
(951) 268-6268

County of San Bernardino
N/S: Cedar Avenue
E/W: Bloomington Avenue
Weather: Clear

File Name : CSBCEBLPM
Site Code : 06714097
Start Date : 3/11/2014
Page No : 2

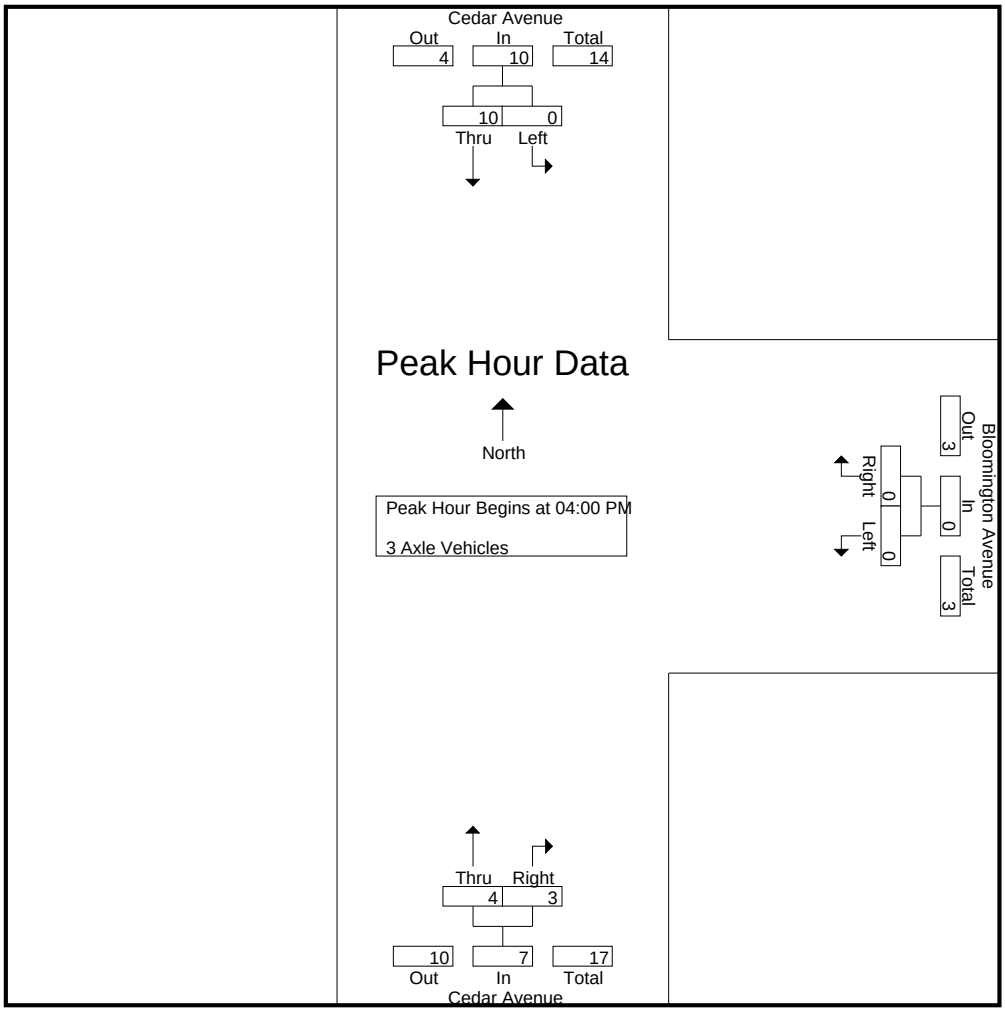


Peak Hour Analysis From 04:00 PM to 04:45 PM - Peak 1 of 1

Peak Hour for Each Approach Begins at:

| | 04:00 PM | | | 04:00 PM | | | 04:00 PM | | |
|---|---|---|---|---|---|---|---|---|---|
| +0 mins. | 0 | 1 | 1 | 0 | 0 | 0 | 0 | 0 | 0 |
| +15 mins. | 0 | 3 | 3 | 0 | 0 | 0 | 0 | 0 | 0 |
| +30 mins. | 0 | 2 | 2 | 0 | 0 | 0 | 1 | 1 | 2 |
| +45 mins. | 0 | **4** | **4** | 0 | 0 | 0 | **3** | **2** | **5** |
| Total Volume | 0 | 10 | 10 | 0 | 0 | 0 | 4 | 3 | 7 |
| % App. Total | 0 | 100 | | 0 | 0 | | 57.1 | 42.9 | |
| PHF | .000 | .625 | .625 | .000 | .000 | .000 | .333 | .375 | .350 |

Counts Unlimited, Inc.
PO Box 1178
Corona, CA 92878
(951) 268-6268

County of San Bernardino
N/S: Cedar Avenue
E/W: Bloomington Avenue
Weather: Clear

File Name : CSBCEBLPM
Site Code : 06714097
Start Date : 3/11/2014
Page No : 1

Groups Printed- 4+ Axle Trucks

| | Cedar Avenue Southbound | | | Bloomington Avenue Westbound | | | Cedar Avenue Northbound | | | |
|---|---|---|---|---|---|---|---|---|---|---|
| Start Time | Left | Thru | App. Total | Left | Right | App. Total | Thru | Right | App. Total | Int. Total |
| 04:00 PM | 0 | 3 | 3 | 0 | 0 | 0 | 5 | 2 | 7 | 10 |
| 04:15 PM | 0 | 5 | 5 | 0 | 0 | 0 | 7 | 0 | 7 | 12 |
| 04:30 PM | 0 | 3 | 3 | 0 | 0 | 0 | 5 | 0 | 5 | 8 |
| 04:45 PM | 0 | 4 | 4 | 1 | 0 | 1 | 2 | 0 | 2 | 7 |
| Total | 0 | 15 | 15 | 1 | 0 | 1 | 19 | 2 | 21 | 37 |
| 05:00 PM | 0 | 4 | 4 | 0 | 0 | 0 | 2 | 1 | 3 | 7 |
| 05:15 PM | 0 | 5 | 5 | 0 | 0 | 0 | 4 | 0 | 4 | 9 |
| 05:30 PM | 0 | 2 | 2 | 1 | 0 | 1 | 5 | 0 | 5 | 8 |
| 05:45 PM | 0 | 0 | 0 | 0 | 0 | 0 | 4 | 0 | 4 | 4 |
| Total | 0 | 11 | 11 | 1 | 0 | 1 | 15 | 1 | 16 | 28 |
| Grand Total | 0 | 26 | 26 | 2 | 0 | 2 | 34 | 3 | 37 | 65 |
| Apprch % | 0 | 100 | | 100 | 0 | | 91.9 | 8.1 | | |
| Total % | 0 | 40 | 40 | 3.1 | 0 | 3.1 | 52.3 | 4.6 | 56.9 | |

| | Cedar Avenue Southbound | | | Bloomington Avenue Westbound | | | Cedar Avenue Northbound | | | |
|---|---|---|---|---|---|---|---|---|---|---|
| Start Time | Left | Thru | App. Total | Left | Right | App. Total | Thru | Right | App. Total | Int. Total |
| Peak Hour Analysis From 04:00 PM to 04:45 PM - Peak 1 of 1 | | | | | | | | | | |
| Peak Hour for Entire Intersection Begins at 04:00 PM | | | | | | | | | | |
| 04:00 PM | 0 | 3 | 3 | 0 | 0 | 0 | 5 | **2** | **7** | 10 |
| 04:15 PM | 0 | **5** | **5** | 0 | 0 | 0 | **7** | 0 | 7 | **12** |
| 04:30 PM | 0 | 3 | 3 | 0 | 0 | 0 | 5 | 0 | 5 | 8 |
| 04:45 PM | 0 | 4 | 4 | **1** | 0 | **1** | 2 | 0 | 2 | 7 |
| Total Volume | 0 | 15 | 15 | 1 | 0 | 1 | 19 | 2 | 21 | 37 |
| % App. Total | 0 | 100 | | 100 | 0 | | 90.5 | 9.5 | | |
| PHF | .000 | .750 | .750 | .250 | .000 | .250 | .679 | .250 | .750 | .771 |

Counts Unlimited, Inc.
PO Box 1178
Corona, CA 92878
(951) 268-6268

County of San Bernardino
N/S: Cedar Avenue
E/W: Bloomington Avenue
Weather: Clear

File Name : CSBCEBLPM
Site Code : 06714097
Start Date : 3/11/2014
Page No : 2

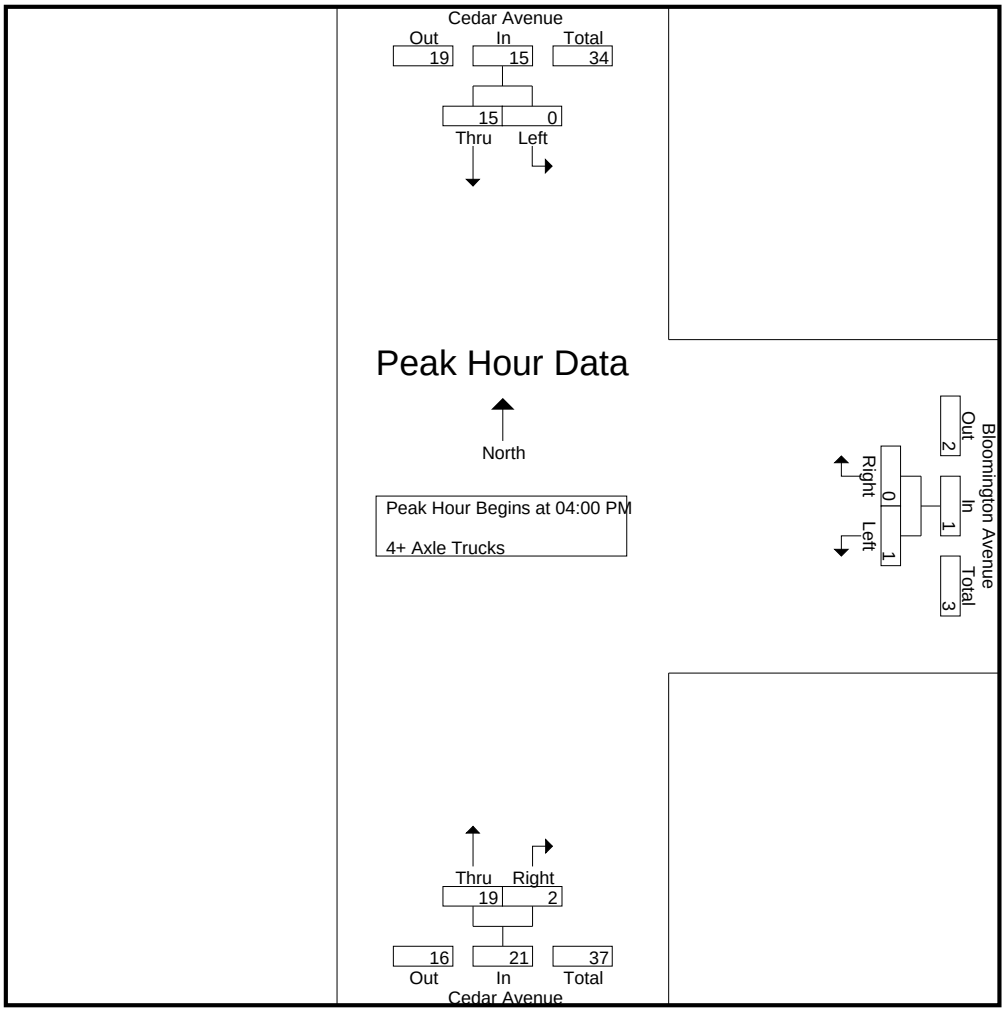


Peak Hour Analysis From 04:00 PM to 04:45 PM - Peak 1 of 1

Peak Hour for Each Approach Begins at:

| | 04:00 PM | | | 04:00 PM | | | 04:00 PM | | |
|---|---|---|---|---|---|---|---|---|---|
| +0 mins. | 0 | 3 | 3 | 0 | 0 | 0 | 5 | **2** | **7** |
| +15 mins. | 0 | **5** | **5** | 0 | 0 | 0 | **7** | 0 | 7 |
| +30 mins. | 0 | 3 | 3 | 0 | 0 | 0 | 5 | 0 | 5 |
| +45 mins. | 0 | 4 | 4 | **1** | 0 | **1** | 2 | 0 | 2 |
| Total Volume | 0 | 15 | 15 | 1 | 0 | 1 | 19 | 2 | 21 |
| % App. Total | 0 | 100 | | 100 | 0 | | 90.5 | 9.5 | |
| PHF | .000 | .750 | .750 | .250 | .000 | .250 | .679 | .250 | .750 |

Counts Unlimited, Inc.
PO Box 1178
Corona, CA 92878
(951) 268-6268

County of San Bernardino
N/S: Cedar Avenue
E/W: Valley Boulevard
Weather: Clear

File Name : CSBCEVAAM
Site Code : 06714097
Start Date : 3/11/2014
Page No : 1

Groups Printed- Passenger Vehicles - Large 2 Axle Vehicles - 3 Axle Vehicles - 4+ Axle Trucks

| | Cedar Avenue Southbound | | | | Valley Boulevard Westbound | | | | Cedar Avenue Northbound | | | | Valley Boulevard Eastbound | | | | |
|---|---|---|---|---|---|---|---|---|---|---|---|---|---|---|---|---|---|
| Start Time | Left | Thru | Right | App. Total | Left | Thru | Right | App. Total | Left | Thru | Right | App. Total | Left | Thru | Right | App. Total | Int. Total |
| 07:00 AM | 8 | 275 | 10 | 293 | 97 | 22 | 1 | 120 | 52 | 235 | 40 | 327 | 9 | 21 | 109 | 139 | 879 |
| 07:15 AM | 14 | 312 | 9 | 335 | 86 | 40 | 6 | 132 | 72 | 242 | 42 | 356 | 7 | 18 | 134 | 159 | 982 |
| 07:30 AM | 14 | 328 | 7 | 349 | 96 | 50 | 10 | 156 | 93 | 259 | 50 | 402 | 7 | 45 | 148 | 200 | 1107 |
| 07:45 AM | 22 | 281 | 14 | 317 | 72 | 74 | 26 | 172 | 96 | 250 | 79 | 425 | 12 | 70 | 107 | 189 | 1103 |
| Total | 58 | 1196 | 40 | 1294 | 351 | 186 | 43 | 580 | 313 | 986 | 211 | 1510 | 35 | 154 | 498 | 687 | 4071 |
| 08:00 AM | 12 | 240 | 10 | 262 | 67 | 79 | 16 | 162 | 80 | 152 | 43 | 275 | 15 | 36 | 106 | 157 | 856 |
| 08:15 AM | 22 | 259 | 16 | 297 | 47 | 61 | 6 | 114 | 75 | 166 | 43 | 284 | 18 | 30 | 88 | 136 | 831 |
| 08:30 AM | 17 | 212 | 14 | 243 | 51 | 43 | 8 | 102 | 57 | 143 | 32 | 232 | 11 | 29 | 110 | 150 | 727 |
| 08:45 AM | 10 | 218 | 16 | 244 | 52 | 34 | 6 | 92 | 55 | 177 | 36 | 268 | 16 | 34 | 75 | 125 | 729 |
| Total | 61 | 929 | 56 | 1046 | 217 | 217 | 36 | 470 | 267 | 638 | 154 | 1059 | 60 | 129 | 379 | 568 | 3143 |
| Grand Total | 119 | 2125 | 96 | 2340 | 568 | 403 | 79 | 1050 | 580 | 1624 | 365 | 2569 | 95 | 283 | 877 | 1255 | 7214 |
| Apprch % | 5.1 | 90.8 | 4.1 | | 54.1 | 38.4 | 7.5 | | 22.6 | 63.2 | 14.2 | | 7.6 | 22.5 | 69.9 | | |
| Total % | 1.6 | 29.5 | 1.3 | 32.4 | 7.9 | 5.6 | 1.1 | 14.6 | 8 | 22.5 | 5.1 | 35.6 | 1.3 | 3.9 | 12.2 | 17.4 | |
| Passenger Vehicles | 112 | 2024 | 88 | 2224 | 547 | 374 | 73 | 994 | 546 | 1516 | 345 | 2407 | 88 | 262 | 848 | 1198 | 6823 |
| % Passenger Vehicles | 94.1 | 95.2 | 91.7 | 95 | 96.3 | 92.8 | 92.4 | 94.7 | 94.1 | 93.3 | 94.5 | 93.7 | 92.6 | 92.6 | 96.7 | 95.5 | 94.6 |
| Large 2 Axle Vehicles | 4 | 35 | 4 | 43 | 17 | 23 | 3 | 43 | 22 | 50 | 17 | 89 | 6 | 17 | 23 | 46 | 221 |
| % Large 2 Axle Vehicles | 3.4 | 1.6 | 4.2 | 1.8 | 3 | 5.7 | 3.8 | 4.1 | 3.8 | 3.1 | 4.7 | 3.5 | 6.3 | 6 | 2.6 | 3.7 | 3.1 |
| 3 Axle Vehicles | 0 | 10 | 1 | 11 | 1 | 5 | 1 | 7 | 2 | 18 | 3 | 23 | 0 | 2 | 4 | 6 | 47 |
| % 3 Axle Vehicles | 0 | 0.5 | 1 | 0.5 | 0.2 | 1.2 | 1.3 | 0.7 | 0.3 | 1.1 | 0.8 | 0.9 | 0 | 0.7 | 0.5 | 0.5 | 0.7 |
| 4+ Axle Trucks | 3 | 56 | 3 | 62 | 3 | 1 | 2 | 6 | 10 | 40 | 0 | 50 | 1 | 2 | 2 | 5 | 123 |
| % 4+ Axle Trucks | 2.5 | 2.6 | 3.1 | 2.6 | 0.5 | 0.2 | 2.5 | 0.6 | 1.7 | 2.5 | 0 | 1.9 | 1.1 | 0.7 | 0.2 | 0.4 | 1.7 |

| | Cedar Avenue Southbound | | | | Valley Boulevard Westbound | | | | Cedar Avenue Northbound | | | | Valley Boulevard Eastbound | | | | |
|---|---|---|---|---|---|---|---|---|---|---|---|---|---|---|---|---|---|
| Start Time | Left | Thru | Right | App. Total | Left | Thru | Right | App. Total | Left | Thru | Right | App. Total | Left | Thru | Right | App. Total | Int. Total |
| Peak Hour Analysis From 07:00 AM to 08:45 AM - Peak 1 of 1 | | | | | | | | | | | | | | | | | |
| Peak Hour for Entire Intersection Begins at 07:00 AM | | | | | | | | | | | | | | | | | |
| 07:00 AM | 8 | 275 | 10 | 293 | **97** | 22 | 1 | 120 | 52 | 235 | 40 | 327 | 9 | 21 | 109 | 139 | 879 |
| 07:15 AM | 14 | 312 | 9 | 335 | 86 | 40 | 6 | 132 | 72 | 242 | 42 | 356 | 7 | 18 | 134 | 159 | 982 |
| 07:30 AM | 14 | **328** | 7 | **349** | 96 | 50 | 10 | 156 | 93 | **259** | 50 | 402 | 7 | 45 | **148** | **200** | **1107** |
| 07:45 AM | **22** | 281 | **14** | 317 | 72 | **74** | **26** | **172** | **96** | 250 | **79** | **425** | **12** | **70** | 107 | 189 | 1103 |
| Total Volume | 58 | 1196 | 40 | 1294 | 351 | 186 | 43 | 580 | 313 | 986 | 211 | 1510 | 35 | 154 | 498 | 687 | 4071 |
| % App. Total | 4.5 | 92.4 | 3.1 | | 60.5 | 32.1 | 7.4 | | 20.7 | 65.3 | 14 | | 5.1 | 22.4 | 72.5 | | |
| PHF | .659 | .912 | .714 | .927 | .905 | .628 | .413 | .843 | .815 | .952 | .668 | .888 | .729 | .550 | .841 | .859 | .919 |

Counts Unlimited, Inc.
PO Box 1178
Corona, CA 92878
(951) 268-6268

County of San Bernardino
N/S: Cedar Avenue
E/W: Valley Boulevard
Weather: Clear

File Name : CSBCEVAAM
Site Code : 06714097
Start Date : 3/11/2014
Page No : 2

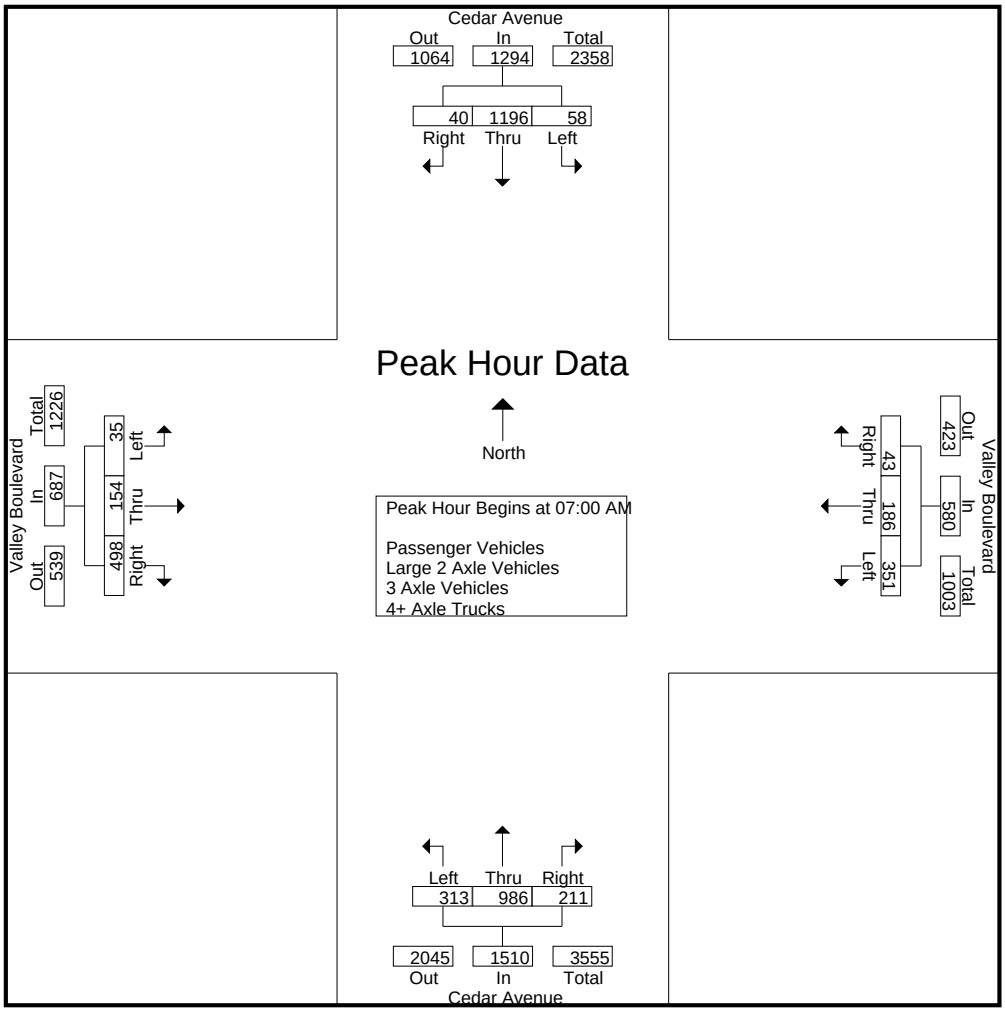


Peak Hour Analysis From 07:00 AM to 08:45 AM - Peak 1 of 1

Peak Hour for Each Approach Begins at:

| | 07:00 AM | | | | 07:15 AM | | | | 07:00 AM | | | | 07:15 AM | | | |
|---|---|---|---|---|---|---|---|---|---|---|---|---|---|---|---|---|
| +0 mins. | 8 | 275 | 10 | 293 | 86 | 40 | 6 | 132 | 52 | 235 | 40 | 327 | 7 | 18 | 134 | 159 |
| +15 mins. | 14 | 312 | 9 | 335 | **96** | 50 | 10 | 156 | 72 | 242 | 42 | 356 | 7 | 45 | **148** | **200** |
| +30 mins. | 14 | **328** | 7 | **349** | 72 | 74 | **26** | **172** | 93 | **259** | 50 | 402 | 12 | **70** | 107 | 189 |
| +45 mins. | **22** | 281 | **14** | 317 | 67 | **79** | 16 | 162 | **96** | 250 | **79** | **425** | **15** | 36 | 106 | 157 |
| Total Volume | 58 | 1196 | 40 | 1294 | 321 | 243 | 58 | 622 | 313 | 986 | 211 | 1510 | 41 | 169 | 495 | 705 |
| % App. Total | 4.5 | 92.4 | 3.1 | | 51.6 | 39.1 | 9.3 | | 20.7 | 65.3 | 14 | | 5.8 | 24 | 70.2 | |
| PHF | .659 | .912 | .714 | .927 | .836 | .769 | .558 | .904 | .815 | .952 | .668 | .888 | .683 | .604 | .836 | .881 |

Counts Unlimited, Inc.
PO Box 1178
Corona, CA 92878
(951) 268-6268

County of San Bernardino
N/S: Cedar Avenue
E/W: Valley Boulevard
Weather: Clear

File Name : CSBCEVAAM
Site Code : 06714097
Start Date : 3/11/2014
Page No : 1

Groups Printed- Passenger Vehicles

| | Cedar Avenue Southbound | | | | Valley Boulevard Westbound | | | | Cedar Avenue Northbound | | | | Valley Boulevard Eastbound | | | | |
|---|---|---|---|---|---|---|---|---|---|---|---|---|---|---|---|---|---|
| Start Time | Left | Thru | Right | App. Total | Left | Thru | Right | App. Total | Left | Thru | Right | App. Total | Left | Thru | Right | App. Total | Int. Total |
| 07:00 AM | 8 | 266 | 9 | 283 | 93 | 20 | 1 | 114 | 50 | 219 | 39 | 308 | 8 | 17 | 108 | 133 | 838 |
| 07:15 AM | 13 | 299 | 8 | 320 | 84 | 36 | 6 | 126 | 69 | 227 | 40 | 336 | 6 | 16 | 130 | 152 | 934 |
| 07:30 AM | 14 | 316 | 7 | 337 | 96 | 48 | 7 | 151 | 91 | 249 | 47 | 387 | 7 | 41 | 146 | 194 | 1069 |
| 07:45 AM | 21 | 270 | 12 | 303 | 68 | 71 | 26 | 165 | 94 | 236 | 78 | 408 | 10 | 68 | 101 | 179 | 1055 |
| Total | 56 | 1151 | 36 | 1243 | 341 | 175 | 40 | 556 | 304 | 931 | 204 | 1439 | 31 | 142 | 485 | 658 | 3896 |
| | | | | | | | | | | | | | | | | | |
| 08:00 AM | 12 | 227 | 8 | 247 | 65 | 74 | 16 | 155 | 67 | 138 | 40 | 245 | 14 | 33 | 102 | 149 | 796 |
| 08:15 AM | 19 | 243 | 16 | 278 | 43 | 58 | 4 | 105 | 72 | 154 | 39 | 265 | 17 | 28 | 83 | 128 | 776 |
| 08:30 AM | 16 | 200 | 13 | 229 | 49 | 40 | 7 | 96 | 53 | 131 | 31 | 215 | 10 | 27 | 106 | 143 | 683 |
| 08:45 AM | 9 | 203 | 15 | 227 | 49 | 27 | 6 | 82 | 50 | 162 | 31 | 243 | 16 | 32 | 72 | 120 | 672 |
| Total | 56 | 873 | 52 | 981 | 206 | 199 | 33 | 438 | 242 | 585 | 141 | 968 | 57 | 120 | 363 | 540 | 2927 |
| | | | | | | | | | | | | | | | | | |
| Grand Total | 112 | 2024 | 88 | 2224 | 547 | 374 | 73 | 994 | 546 | 1516 | 345 | 2407 | 88 | 262 | 848 | 1198 | 6823 |
| Apprch % | 5 | 91 | 4 | | 55 | 37.6 | 7.3 | | 22.7 | 63 | 14.3 | | 7.3 | 21.9 | 70.8 | | |
| Total % | 1.6 | 29.7 | 1.3 | 32.6 | 8 | 5.5 | 1.1 | 14.6 | 8 | 22.2 | 5.1 | 35.3 | 1.3 | 3.8 | 12.4 | 17.6 | |

| | Cedar Avenue Southbound | | | | Valley Boulevard Westbound | | | | Cedar Avenue Northbound | | | | Valley Boulevard Eastbound | | | | |
|---|---|---|---|---|---|---|---|---|---|---|---|---|---|---|---|---|---|
| Start Time | Left | Thru | Right | App. Total | Left | Thru | Right | App. Total | Left | Thru | Right | App. Total | Left | Thru | Right | App. Total | Int. Total |
| Peak Hour Analysis From 07:00 AM to 07:45 AM - Peak 1 of 1 | | | | | | | | | | | | | | | | | |
| Peak Hour for Entire Intersection Begins at 07:00 AM | | | | | | | | | | | | | | | | | |
| 07:00 AM | 8 | 266 | 9 | 283 | 93 | 20 | 1 | 114 | 50 | 219 | 39 | 308 | 8 | 17 | 108 | 133 | 838 |
| 07:15 AM | 13 | 299 | 8 | 320 | 84 | 36 | 6 | 126 | 69 | 227 | 40 | 336 | 6 | 16 | 130 | 152 | 934 |
| 07:30 AM | 14 | **316** | 7 | **337** | **96** | 48 | 7 | 151 | 91 | **249** | 47 | 387 | 7 | 41 | **146** | **194** | **1069** |
| 07:45 AM | **21** | 270 | **12** | 303 | 68 | **71** | **26** | **165** | **94** | 236 | **78** | **408** | **10** | **68** | 101 | 179 | 1055 |
| Total Volume | 56 | 1151 | 36 | 1243 | 341 | 175 | 40 | 556 | 304 | 931 | 204 | 1439 | 31 | 142 | 485 | 658 | 3896 |
| % App. Total | 4.5 | 92.6 | 2.9 | | 61.3 | 31.5 | 7.2 | | 21.1 | 64.7 | 14.2 | | 4.7 | 21.6 | 73.7 | | |
| PHF | .667 | .911 | .750 | .922 | .888 | .616 | .385 | .842 | .809 | .935 | .654 | .882 | .775 | .522 | .830 | .848 | .911 |

Counts Unlimited, Inc.
PO Box 1178
Corona, CA 92878
(951) 268-6268

County of San Bernardino
N/S: Cedar Avenue
E/W: Valley Boulevard
Weather: Clear

File Name : CSBCEVAAM
Site Code : 06714097
Start Date : 3/11/2014
Page No : 2

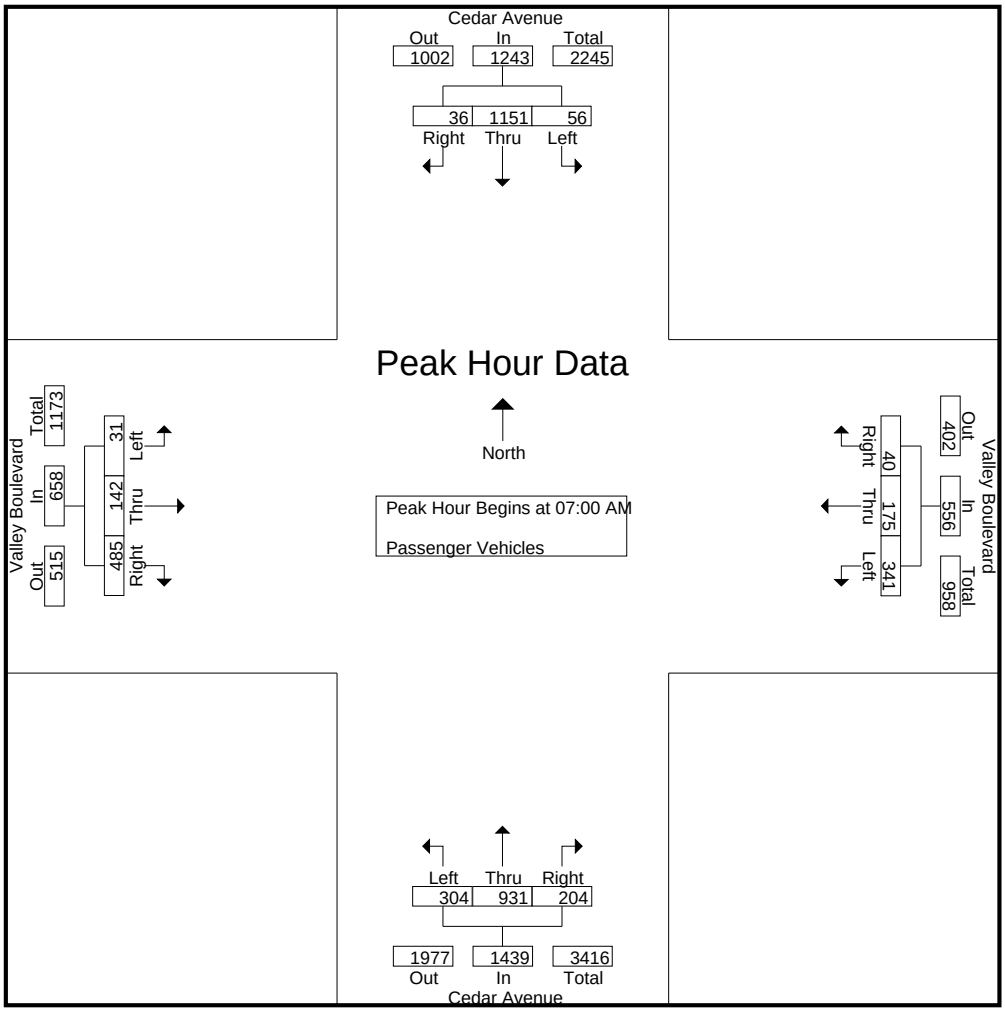


Peak Hour Analysis From 07:00 AM to 07:45 AM - Peak 1 of 1

Peak Hour for Each Approach Begins at:

| | 07:00 AM | | | | 07:00 AM | | | | 07:00 AM | | | | 07:00 AM | | | |
|---|---|---|---|---|---|---|---|---|---|---|---|---|---|---|---|---|
| +0 mins. | 8 | 266 | 9 | 283 | 93 | 20 | 1 | 114 | 50 | 219 | 39 | 308 | 8 | 17 | 108 | 133 |
| +15 mins. | 13 | 299 | 8 | 320 | 84 | 36 | 6 | 126 | 69 | 227 | 40 | 336 | 6 | 16 | 130 | 152 |
| +30 mins. | 14 | **316** | 7 | **337** | **96** | 48 | 7 | 151 | 91 | **249** | 47 | 387 | 7 | 41 | **146** | **194** |
| +45 mins. | **21** | 270 | **12** | 303 | 68 | **71** | **26** | **165** | **94** | 236 | **78** | **408** | **10** | **68** | 101 | 179 |
| Total Volume | 56 | 1151 | 36 | 1243 | 341 | 175 | 40 | 556 | 304 | 931 | 204 | 1439 | 31 | 142 | 485 | 658 |
| % App. Total | 4.5 | 92.6 | 2.9 | | 61.3 | 31.5 | 7.2 | | 21.1 | 64.7 | 14.2 | | 4.7 | 21.6 | 73.7 | |
| PHF | .667 | .911 | .750 | .922 | .888 | .616 | .385 | .842 | .809 | .935 | .654 | .882 | .775 | .522 | .830 | .848 |

Counts Unlimited, Inc.
PO Box 1178
Corona, CA 92878
(951) 268-6268

County of San Bernardino
N/S: Cedar Avenue
E/W: Valley Boulevard
Weather: Clear

File Name : CSBCEVAAM
Site Code : 06714097
Start Date : 3/11/2014
Page No : 1

Groups Printed- Large 2 Axle Vehicles

| | Cedar Avenue Southbound | | | | Valley Boulevard Westbound | | | | Cedar Avenue Northbound | | | | Valley Boulevard Eastbound | | | | |
|---|---|---|---|---|---|---|---|---|---|---|---|---|---|---|---|---|---|
| Start Time | Left | Thru | Right | App. Total | Left | Thru | Right | App. Total | Left | Thru | Right | App. Total | Left | Thru | Right | App. Total | Int. Total |
| 07:00 AM | 0 | 5 | 1 | 6 | 3 | 1 | 0 | 4 | 1 | 4 | 0 | 5 | 1 | 3 | 0 | 4 | 19 |
| 07:15 AM | 0 | 4 | 0 | 4 | 2 | 4 | 0 | 6 | 3 | 5 | 2 | 10 | 1 | 2 | 3 | 6 | 26 |
| 07:30 AM | 0 | 4 | 0 | 4 | 0 | 2 | 1 | 3 | 2 | 7 | 2 | 11 | 0 | 3 | 1 | 4 | 22 |
| 07:45 AM | 1 | 3 | 0 | 4 | 2 | 2 | 0 | 4 | 2 | 9 | 1 | 12 | 1 | 1 | 6 | 8 | 28 |
| Total | 1 | 16 | 1 | 18 | 7 | 9 | 1 | 17 | 8 | 25 | 5 | 38 | 3 | 9 | 10 | 22 | 95 |
| 08:00 AM | 0 | 2 | 2 | 4 | 2 | 3 | 0 | 5 | 7 | 8 | 2 | 17 | 1 | 3 | 3 | 7 | 33 |
| 08:15 AM | 3 | 3 | 0 | 6 | 4 | 3 | 1 | 8 | 3 | 3 | 4 | 10 | 1 | 1 | 5 | 7 | 31 |
| 08:30 AM | 0 | 6 | 0 | 6 | 2 | 3 | 1 | 6 | 0 | 6 | 1 | 7 | 1 | 2 | 2 | 5 | 24 |
| 08:45 AM | 0 | 8 | 1 | 9 | 2 | 5 | 0 | 7 | 4 | 8 | 5 | 17 | 0 | 2 | 3 | 5 | 38 |
| Total | 3 | 19 | 3 | 25 | 10 | 14 | 2 | 26 | 14 | 25 | 12 | 51 | 3 | 8 | 13 | 24 | 126 |
| Grand Total | 4 | 35 | 4 | 43 | 17 | 23 | 3 | 43 | 22 | 50 | 17 | 89 | 6 | 17 | 23 | 46 | 221 |
| Apprch % | 9.3 | 81.4 | 9.3 | | 39.5 | 53.5 | 7 | | 24.7 | 56.2 | 19.1 | | 13 | 37 | 50 | | |
| Total % | 1.8 | 15.8 | 1.8 | 19.5 | 7.7 | 10.4 | 1.4 | 19.5 | 10 | 22.6 | 7.7 | 40.3 | 2.7 | 7.7 | 10.4 | 20.8 | |

| | Cedar Avenue Southbound | | | | Valley Boulevard Westbound | | | | Cedar Avenue Northbound | | | | Valley Boulevard Eastbound | | | | |
|---|---|---|---|---|---|---|---|---|---|---|---|---|---|---|---|---|---|
| Start Time | Left | Thru | Right | App. Total | Left | Thru | Right | App. Total | Left | Thru | Right | App. Total | Left | Thru | Right | App. Total | Int. Total |
| Peak Hour Analysis From 07:00 AM to 07:45 AM - Peak 1 of 1 | | | | | | | | | | | | | | | | | |
| Peak Hour for Entire Intersection Begins at 07:00 AM | | | | | | | | | | | | | | | | | |
| 07:00 AM | 0 | **5** | **1** | **6** | **3** | 1 | 0 | 4 | 1 | 4 | 0 | 5 | **1** | **3** | 0 | 4 | 19 |
| 07:15 AM | 0 | 4 | 0 | 4 | 2 | **4** | 0 | **6** | **3** | 5 | **2** | 10 | 1 | 2 | 3 | 6 | 26 |
| 07:30 AM | 0 | 4 | 0 | 4 | 0 | 2 | **1** | 3 | 2 | 7 | 2 | 11 | 0 | 3 | 1 | 4 | 22 |
| 07:45 AM | **1** | 3 | 0 | 4 | 2 | 2 | 0 | 4 | 2 | **9** | 1 | **12** | 1 | 1 | **6** | **8** | **28** |
| Total Volume | 1 | 16 | 1 | 18 | 7 | 9 | 1 | 17 | 8 | 25 | 5 | 38 | 3 | 9 | 10 | 22 | 95 |
| % App. Total | 5.6 | 88.9 | 5.6 | | 41.2 | 52.9 | 5.9 | | 21.1 | 65.8 | 13.2 | | 13.6 | 40.9 | 45.5 | | |
| PHF | .250 | .800 | .250 | .750 | .583 | .563 | .250 | .708 | .667 | .694 | .625 | .792 | .750 | .750 | .417 | .688 | .848 |

Counts Unlimited, Inc.
PO Box 1178
Corona, CA 92878
(951) 268-6268

County of San Bernardino
N/S: Cedar Avenue
E/W: Valley Boulevard
Weather: Clear

File Name : CSBCEVAAM
Site Code : 06714097
Start Date : 3/11/2014
Page No : 2

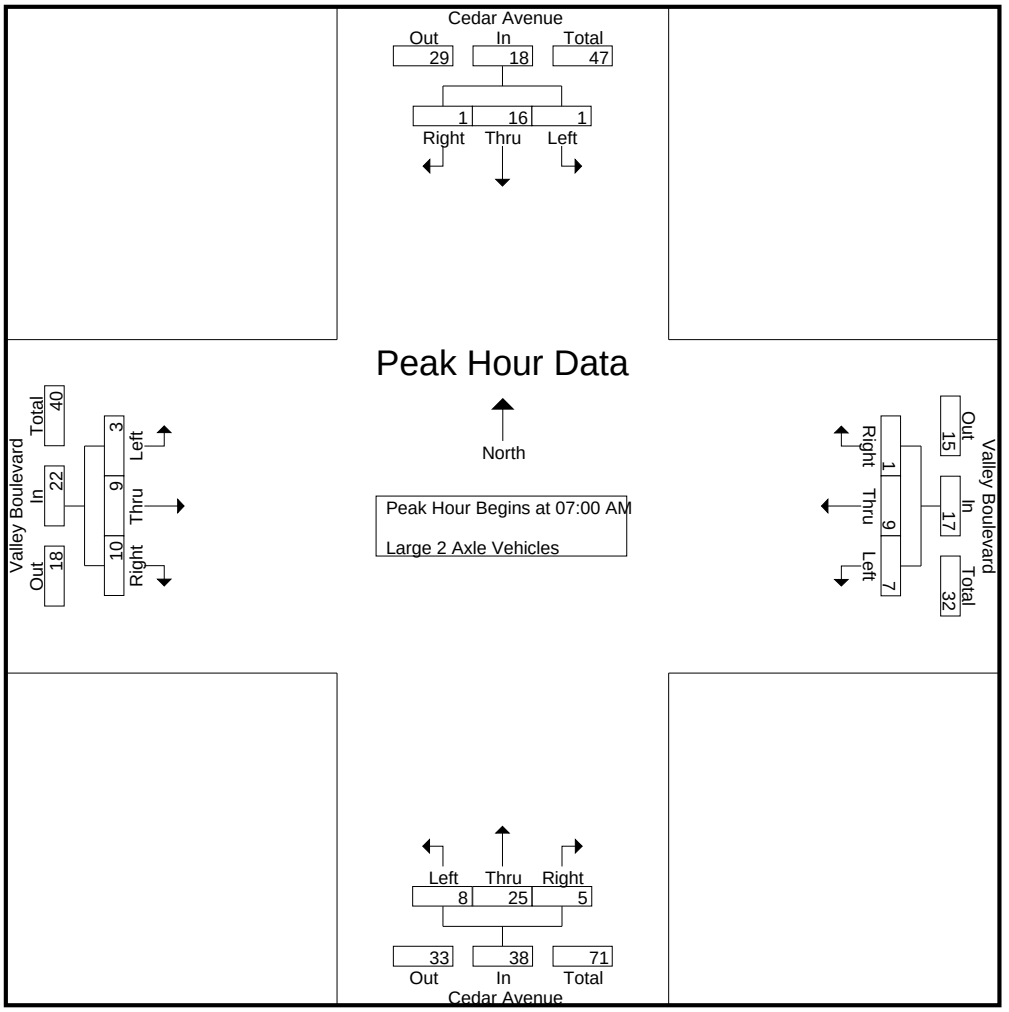


Peak Hour Analysis From 07:00 AM to 07:45 AM - Peak 1 of 1

Peak Hour for Each Approach Begins at:

| | 07:00 AM | | | | 07:00 AM | | | | 07:00 AM | | | | 07:00 AM | | | |
|---|---|---|---|---|---|---|---|---|---|---|---|---|---|---|---|---|
| +0 mins. | 0 | **5** | **1** | **6** | **3** | 1 | 0 | 4 | 1 | 4 | 0 | 5 | **1** | **3** | 0 | 4 |
| +15 mins. | 0 | 4 | 0 | 4 | 2 | **4** | 0 | **6** | **3** | 5 | **2** | 10 | 1 | 2 | 3 | 6 |
| +30 mins. | 0 | 4 | 0 | 4 | 0 | 2 | **1** | 3 | 2 | 7 | 2 | 11 | 0 | 3 | 1 | 4 |
| +45 mins. | **1** | 3 | 0 | 4 | 2 | 2 | 0 | 4 | 2 | **9** | 1 | **12** | 1 | 1 | **6** | **8** |
| Total Volume | 1 | 16 | 1 | 18 | 7 | 9 | 1 | 17 | 8 | 25 | 5 | 38 | 3 | 9 | 10 | 22 |
| % App. Total | 5.6 | 88.9 | 5.6 | | 41.2 | 52.9 | 5.9 | | 21.1 | 65.8 | 13.2 | | 13.6 | 40.9 | 45.5 | |
| PHF | .250 | .800 | .250 | .750 | .583 | .563 | .250 | .708 | .667 | .694 | .625 | .792 | .750 | .750 | .417 | .688 |

Counts Unlimited, Inc.
PO Box 1178
Corona, CA 92878
(951) 268-6268

County of San Bernardino
N/S: Cedar Avenue
E/W: Valley Boulevard
Weather: Clear

File Name : CSBCEVAAM
Site Code : 06714097
Start Date : 3/11/2014
Page No : 1

Groups Printed- 3 Axle Vehicles

| | Cedar Avenue Southbound | | | | Valley Boulevard Westbound | | | | Cedar Avenue Northbound | | | | Valley Boulevard Eastbound | | | | |
|---|---|---|---|---|---|---|---|---|---|---|---|---|---|---|---|---|---|
| Start Time | Left | Thru | Right | App. Total | Left | Thru | Right | App. Total | Left | Thru | Right | App. Total | Left | Thru | Right | App. Total | Int. Total |
| 07:00 AM | 0 | 0 | 0 | 0 | 0 | 1 | 0 | 1 | 0 | 5 | 1 | 6 | 0 | 1 | 1 | 2 | 9 |
| 07:15 AM | 0 | 2 | 1 | 3 | 0 | 0 | 0 | 0 | 0 | 2 | 0 | 2 | 0 | 0 | 0 | 0 | 5 |
| 07:30 AM | 0 | 1 | 0 | 1 | 0 | 0 | 1 | 1 | 0 | 0 | 1 | 1 | 0 | 1 | 1 | 2 | 5 |
| 07:45 AM | 0 | 0 | 0 | 0 | 1 | 1 | 0 | 2 | 0 | 1 | 0 | 1 | 0 | 0 | 0 | 0 | 3 |
| Total | 0 | 3 | 1 | 4 | 1 | 2 | 1 | 4 | 0 | 8 | 2 | 10 | 0 | 2 | 2 | 4 | 22 |
| 08:00 AM | 0 | 1 | 0 | 1 | 0 | 1 | 0 | 1 | 1 | 3 | 1 | 5 | 0 | 0 | 1 | 1 | 8 |
| 08:15 AM | 0 | 2 | 0 | 2 | 0 | 0 | 0 | 0 | 0 | 3 | 0 | 3 | 0 | 0 | 0 | 0 | 5 |
| 08:30 AM | 0 | 2 | 0 | 2 | 0 | 0 | 0 | 0 | 1 | 2 | 0 | 3 | 0 | 0 | 1 | 1 | 6 |
| 08:45 AM | 0 | 2 | 0 | 2 | 0 | 2 | 0 | 2 | 0 | 2 | 0 | 2 | 0 | 0 | 0 | 0 | 6 |
| Total | 0 | 7 | 0 | 7 | 0 | 3 | 0 | 3 | 2 | 10 | 1 | 13 | 0 | 0 | 2 | 2 | 25 |
| Grand Total | 0 | 10 | 1 | 11 | 1 | 5 | 1 | 7 | 2 | 18 | 3 | 23 | 0 | 2 | 4 | 6 | 47 |
| Apprch % | 0 | 90.9 | 9.1 | | 14.3 | 71.4 | 14.3 | | 8.7 | 78.3 | 13 | | 0 | 33.3 | 66.7 | | |
| Total % | 0 | 21.3 | 2.1 | 23.4 | 2.1 | 10.6 | 2.1 | 14.9 | 4.3 | 38.3 | 6.4 | 48.9 | 0 | 4.3 | 8.5 | 12.8 | |

| | Cedar Avenue Southbound | | | | Valley Boulevard Westbound | | | | Cedar Avenue Northbound | | | | Valley Boulevard Eastbound | | | | |
|---|---|---|---|---|---|---|---|---|---|---|---|---|---|---|---|---|---|
| Start Time | Left | Thru | Right | App. Total | Left | Thru | Right | App. Total | Left | Thru | Right | App. Total | Left | Thru | Right | App. Total | Int. Total |
| Peak Hour Analysis From 07:00 AM to 07:45 AM - Peak 1 of 1 | | | | | | | | | | | | | | | | | |
| Peak Hour for Entire Intersection Begins at 07:00 AM | | | | | | | | | | | | | | | | | |
| 07:00 AM | 0 | 0 | 0 | 0 | 0 | **1** | 0 | 1 | 0 | **5** | **1** | **6** | 0 | **1** | **1** | **2** | **9** |
| 07:15 AM | 0 | **2** | **1** | **3** | 0 | 0 | 0 | 0 | 0 | 2 | 0 | 2 | 0 | 0 | 0 | 0 | 5 |
| 07:30 AM | 0 | 1 | 0 | 1 | 0 | 0 | **1** | 1 | 0 | 0 | 1 | 1 | 0 | 1 | 1 | 2 | 5 |
| 07:45 AM | 0 | 0 | 0 | 0 | **1** | 1 | 0 | **2** | 0 | 1 | 0 | 1 | 0 | 0 | 0 | 0 | 3 |
| Total Volume | 0 | 3 | 1 | 4 | 1 | 2 | 1 | 4 | 0 | 8 | 2 | 10 | 0 | 2 | 2 | 4 | 22 |
| % App. Total | 0 | 75 | 25 | | 25 | 50 | 25 | | 0 | 80 | 20 | | 0 | 50 | 50 | | |
| PHF | .000 | .375 | .250 | .333 | .250 | .500 | .250 | .500 | .000 | .400 | .500 | .417 | .000 | .500 | .500 | .500 | .611 |

Counts Unlimited, Inc.
PO Box 1178
Corona, CA 92878
(951) 268-6268

County of San Bernardino
N/S: Cedar Avenue
E/W: Valley Boulevard
Weather: Clear

File Name : CSBCEVAAM
Site Code : 06714097
Start Date : 3/11/2014
Page No : 2

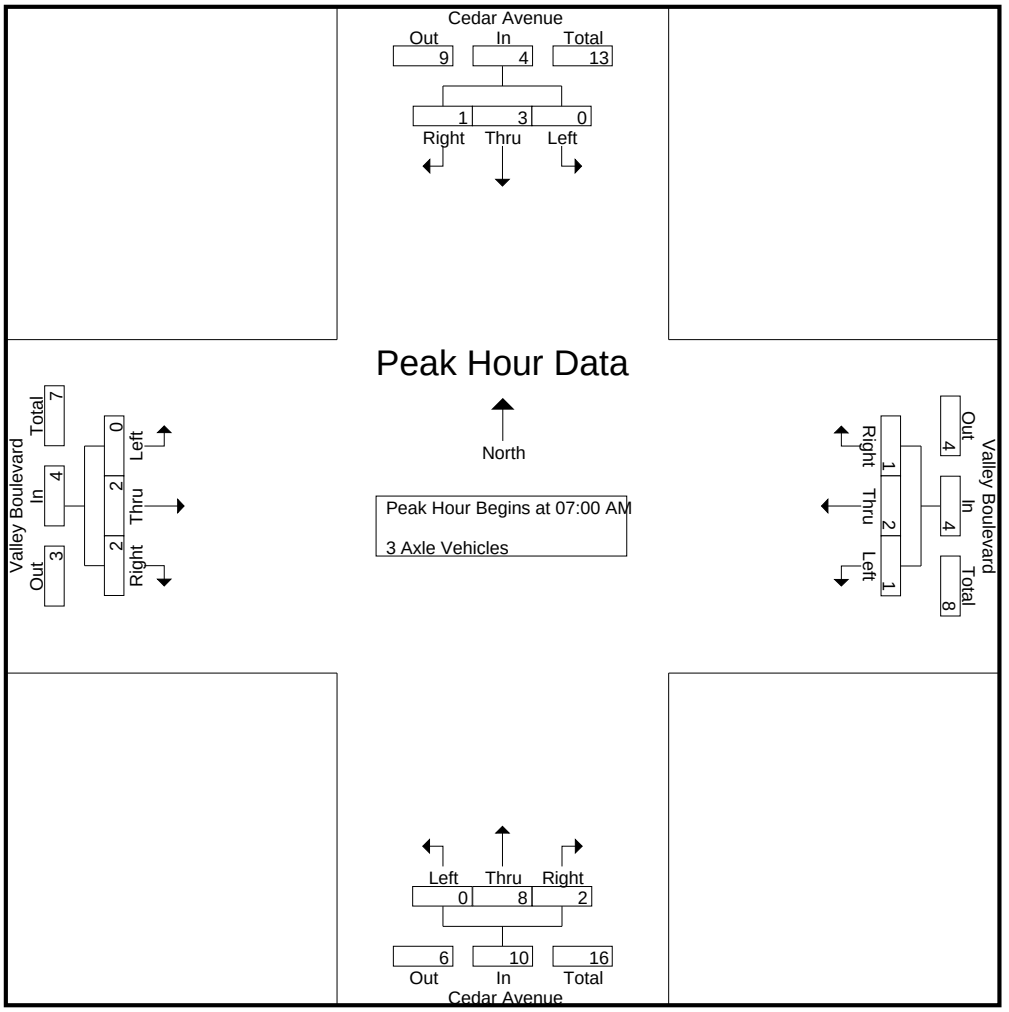


Peak Hour Analysis From 07:00 AM to 07:45 AM - Peak 1 of 1

Peak Hour for Each Approach Begins at:

| | 07:00 AM | | | | 07:00 AM | | | | 07:00 AM | | | | 07:00 AM | | | |
|---|---|---|---|---|---|---|---|---|---|---|---|---|---|---|---|---|
| +0 mins. | 0 | 0 | 0 | 0 | 0 | **1** | 0 | 1 | 0 | **5** | **1** | **6** | 0 | **1** | **1** | **2** |
| +15 mins. | 0 | **2** | **1** | **3** | 0 | 0 | 0 | 0 | 0 | 2 | 0 | 2 | 0 | 0 | 0 | 0 |
| +30 mins. | 0 | 1 | 0 | 1 | 0 | 0 | **1** | 1 | 0 | 0 | 1 | 1 | 0 | 1 | 1 | 2 |
| +45 mins. | 0 | 0 | 0 | 0 | **1** | 1 | 0 | **2** | 0 | 1 | 0 | 1 | 0 | 0 | 0 | 0 |
| Total Volume | 0 | 3 | 1 | 4 | 1 | 2 | 1 | 4 | 0 | 8 | 2 | 10 | 0 | 2 | 2 | 4 |
| % App. Total | 0 | 75 | 25 | | 25 | 50 | 25 | | 0 | 80 | 20 | | 0 | 50 | 50 | |
| PHF | .000 | .375 | .250 | .333 | .250 | .500 | .250 | .500 | .000 | .400 | .500 | .417 | .000 | .500 | .500 | .500 |

Counts Unlimited, Inc.
PO Box 1178
Corona, CA 92878
(951) 268-6268

County of San Bernardino
N/S: Cedar Avenue
E/W: Valley Boulevard
Weather: Clear

File Name : CSBCEVAAM
Site Code : 06714097
Start Date : 3/11/2014
Page No : 1

Groups Printed- 4+ Axle Trucks

| | Cedar Avenue Southbound | | | | Valley Boulevard Westbound | | | | Cedar Avenue Northbound | | | | Valley Boulevard Eastbound | | | | |
|---|---|---|---|---|---|---|---|---|---|---|---|---|---|---|---|---|---|
| Start Time | Left | Thru | Right | App. Total | Left | Thru | Right | App. Total | Left | Thru | Right | App. Total | Left | Thru | Right | App. Total | Int. Total |
| 07:00 AM | 0 | 4 | 0 | 4 | 1 | 0 | 0 | 1 | 1 | 7 | 0 | 8 | 0 | 0 | 0 | 0 | 13 |
| 07:15 AM | 1 | 7 | 0 | 8 | 0 | 0 | 0 | 0 | 0 | 8 | 0 | 8 | 0 | 0 | 1 | 1 | 17 |
| 07:30 AM | 0 | 7 | 0 | 7 | 0 | 0 | 1 | 1 | 0 | 3 | 0 | 3 | 0 | 0 | 0 | 0 | 11 |
| 07:45 AM | 0 | 8 | 2 | 10 | 1 | 0 | 0 | 1 | 0 | 4 | 0 | 4 | 1 | 1 | 0 | 2 | 17 |
| Total | 1 | 26 | 2 | 29 | 2 | 0 | 1 | 3 | 1 | 22 | 0 | 23 | 1 | 1 | 1 | 3 | 58 |
| 08:00 AM | 0 | 10 | 0 | 10 | 0 | 1 | 0 | 1 | 5 | 3 | 0 | 8 | 0 | 0 | 0 | 0 | 19 |
| 08:15 AM | 0 | 11 | 0 | 11 | 0 | 0 | 1 | 1 | 0 | 6 | 0 | 6 | 0 | 1 | 0 | 1 | 19 |
| 08:30 AM | 1 | 4 | 1 | 6 | 0 | 0 | 0 | 0 | 3 | 4 | 0 | 7 | 0 | 0 | 1 | 1 | 14 |
| 08:45 AM | 1 | 5 | 0 | 6 | 1 | 0 | 0 | 1 | 1 | 5 | 0 | 6 | 0 | 0 | 0 | 0 | 13 |
| Total | 2 | 30 | 1 | 33 | 1 | 1 | 1 | 3 | 9 | 18 | 0 | 27 | 0 | 1 | 1 | 2 | 65 |
| Grand Total | 3 | 56 | 3 | 62 | 3 | 1 | 2 | 6 | 10 | 40 | 0 | 50 | 1 | 2 | 2 | 5 | 123 |
| Apprch % | 4.8 | 90.3 | 4.8 | | 50 | 16.7 | 33.3 | | 20 | 80 | 0 | | 20 | 40 | 40 | | |
| Total % | 2.4 | 45.5 | 2.4 | 50.4 | 2.4 | 0.8 | 1.6 | 4.9 | 8.1 | 32.5 | 0 | 40.7 | 0.8 | 1.6 | 1.6 | 4.1 | |

| | Cedar Avenue Southbound | | | | Valley Boulevard Westbound | | | | Cedar Avenue Northbound | | | | Valley Boulevard Eastbound | | | | |
|---|---|---|---|---|---|---|---|---|---|---|---|---|---|---|---|---|---|
| Start Time | Left | Thru | Right | App. Total | Left | Thru | Right | App. Total | Left | Thru | Right | App. Total | Left | Thru | Right | App. Total | Int. Total |
| Peak Hour Analysis From 07:00 AM to 07:45 AM - Peak 1 of 1 | | | | | | | | | | | | | | | | | |
| Peak Hour for Entire Intersection Begins at 07:00 AM | | | | | | | | | | | | | | | | | |
| 07:00 AM | 0 | 4 | 0 | 4 | **1** | 0 | 0 | **1** | **1** | 7 | 0 | **8** | 0 | 0 | 0 | 0 | 13 |
| 07:15 AM | **1** | 7 | 0 | 8 | 0 | 0 | 0 | 0 | 0 | **8** | 0 | 8 | 0 | 0 | **1** | 1 | **17** |
| 07:30 AM | 0 | 7 | 0 | 7 | 0 | 0 | **1** | 1 | 0 | 3 | 0 | 3 | 0 | 0 | 0 | 0 | 11 |
| 07:45 AM | 0 | **8** | **2** | **10** | 1 | 0 | 0 | 1 | 0 | 4 | 0 | 4 | **1** | **1** | 0 | **2** | 17 |
| Total Volume | 1 | 26 | 2 | 29 | 2 | 0 | 1 | 3 | 1 | 22 | 0 | 23 | 1 | 1 | 1 | 3 | 58 |
| % App. Total | 3.4 | 89.7 | 6.9 | | 66.7 | 0 | 33.3 | | 4.3 | 95.7 | 0 | | 33.3 | 33.3 | 33.3 | | |
| PHF | .250 | .813 | .250 | .725 | .500 | .000 | .250 | .750 | .250 | .688 | .000 | .719 | .250 | .250 | .250 | .375 | .853 |

Counts Unlimited, Inc.
PO Box 1178
Corona, CA 92878
(951) 268-6268

County of San Bernardino
N/S: Cedar Avenue
E/W: Valley Boulevard
Weather: Clear

File Name : CSBCEVAAM
Site Code : 06714097
Start Date : 3/11/2014
Page No : 2

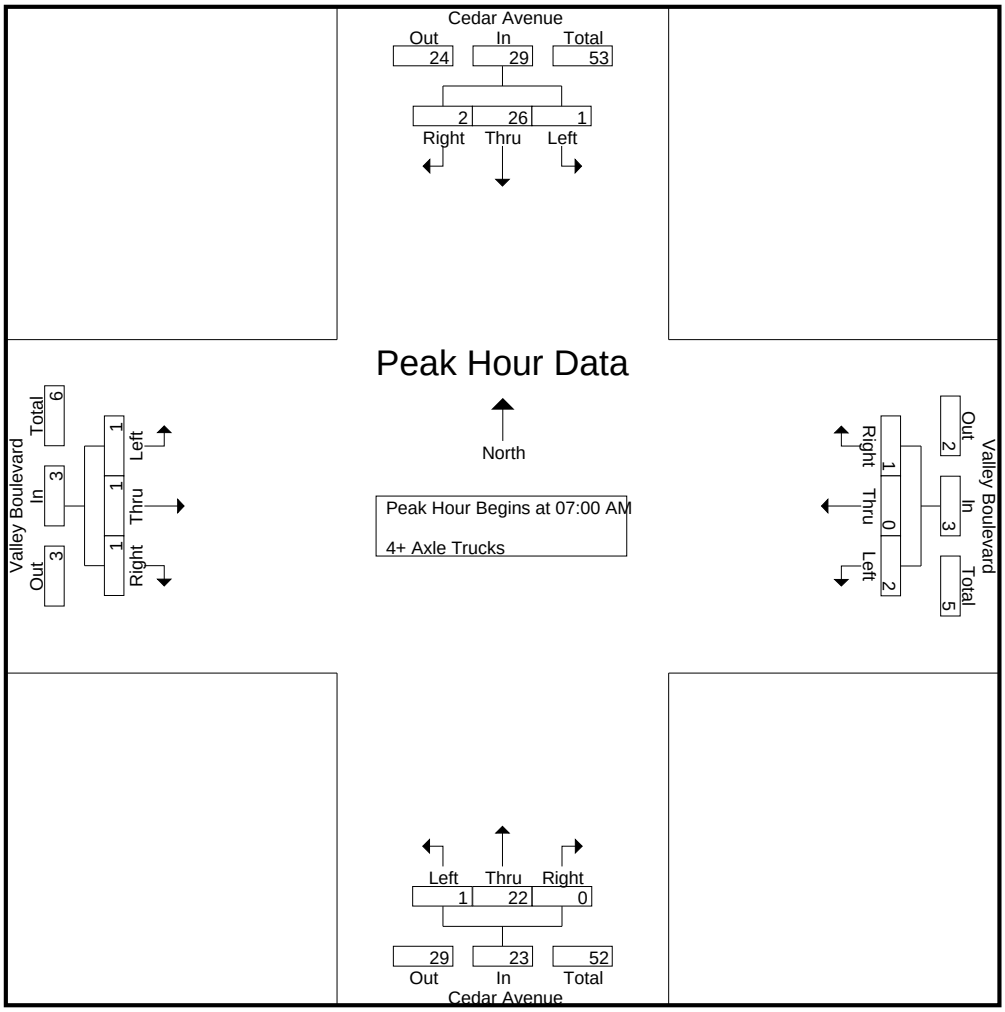


Peak Hour Analysis From 07:00 AM to 07:45 AM - Peak 1 of 1

Peak Hour for Each Approach Begins at:

| | 07:00 AM | | | | 07:00 AM | | | | 07:00 AM | | | | 07:00 AM | | | |
|---|---|---|---|---|---|---|---|---|---|---|---|---|---|---|---|---|
| +0 mins. | 0 | 4 | 0 | 4 | **1** | 0 | 0 | **1** | **1** | 7 | 0 | **8** | 0 | 0 | 0 | 0 |
| +15 mins. | **1** | 7 | 0 | 8 | 0 | 0 | 0 | 0 | 0 | **8** | 0 | 8 | 0 | 0 | **1** | 1 |
| +30 mins. | 0 | 7 | 0 | 7 | 0 | 0 | **1** | 1 | 0 | 3 | 0 | 3 | 0 | 0 | 0 | 0 |
| +45 mins. | 0 | **8** | **2** | **10** | 1 | 0 | 0 | 1 | 0 | 4 | 0 | 4 | **1** | **1** | 0 | **2** |
| Total Volume | 1 | 26 | 2 | 29 | 2 | 0 | 1 | 3 | 1 | 22 | 0 | 23 | 1 | 1 | 1 | 3 |
| % App. Total | 3.4 | 89.7 | 6.9 | | 66.7 | 0 | 33.3 | | 4.3 | 95.7 | 0 | | 33.3 | 33.3 | 33.3 | |
| PHF | .250 | .813 | .250 | .725 | .500 | .000 | .250 | .750 | .250 | .688 | .000 | .719 | .250 | .250 | .250 | .375 |

Counts Unlimited, Inc.
PO Box 1178
Corona, CA 92878
(951) 268-6268

County of San Bernardino
N/S: Cedar Avenue
E/W: Valley Boulevard
Weather: Clear

File Name : CSBCEVAPM
Site Code : 06714097
Start Date : 3/11/2014
Page No : 1

Groups Printed- Passenger Vehicles - Large 2 Axle Vehicles - 3 Axle Vehicles - 4+ Axle Trucks

| | Cedar Avenue Southbound | | | | Valley Boulevard Westbound | | | | Cedar Avenue Northbound | | | | Valley Boulevard Eastbound | | | | |
|---|---|---|---|---|---|---|---|---|---|---|---|---|---|---|---|---|---|
| Start Time | Left | Thru | Right | App. Total | Left | Thru | Right | App. Total | Left | Thru | Right | App. Total | Left | Thru | Right | App. Total | Int. Total |
| 04:00 PM | 23 | 205 | 16 | 244 | 71 | 77 | 24 | 172 | 86 | 276 | 55 | 417 | 49 | 96 | 136 | 281 | 1114 |
| 04:15 PM | 14 | 201 | 23 | 238 | 58 | 77 | 22 | 157 | 107 | 307 | 55 | 469 | 42 | 63 | 102 | 207 | 1071 |
| 04:30 PM | 17 | 194 | 13 | 224 | 64 | 70 | 16 | 150 | 92 | 288 | 60 | 440 | 51 | 78 | 132 | 261 | 1075 |
| 04:45 PM | 36 | 204 | 13 | 253 | 55 | 64 | 8 | 127 | 105 | 295 | 42 | 442 | 56 | 81 | 135 | 272 | 1094 |
| Total | 90 | 804 | 65 | 959 | 248 | 288 | 70 | 606 | 390 | 1166 | 212 | 1768 | 198 | 318 | 505 | 1021 | 4354 |
| 05:00 PM | 33 | 203 | 17 | 253 | 60 | 64 | 15 | 139 | 106 | 293 | 48 | 447 | 48 | 81 | 122 | 251 | 1090 |
| 05:15 PM | 20 | 196 | 23 | 239 | 60 | 69 | 24 | 153 | 106 | 302 | 51 | 459 | 51 | 83 | 136 | 270 | 1121 |
| 05:30 PM | 12 | 187 | 20 | 219 | 53 | 65 | 22 | 140 | 124 | 299 | 61 | 484 | 33 | 80 | 120 | 233 | 1076 |
| 05:45 PM | 22 | 195 | 9 | 226 | 63 | 109 | 16 | 188 | 91 | 289 | 55 | 435 | 49 | 74 | 103 | 226 | 1075 |
| Total | 87 | 781 | 69 | 937 | 236 | 307 | 77 | 620 | 427 | 1183 | 215 | 1825 | 181 | 318 | 481 | 980 | 4362 |
| Grand Total | 177 | 1585 | 134 | 1896 | 484 | 595 | 147 | 1226 | 817 | 2349 | 427 | 3593 | 379 | 636 | 986 | 2001 | 8716 |
| Apprch % | 9.3 | 83.6 | 7.1 | | 39.5 | 48.5 | 12 | | 22.7 | 65.4 | 11.9 | | 18.9 | 31.8 | 49.3 | | |
| Total % | 2 | 18.2 | 1.5 | 21.8 | 5.6 | 6.8 | 1.7 | 14.1 | 9.4 | 27 | 4.9 | 41.2 | 4.3 | 7.3 | 11.3 | 23 | |
| Passenger Vehicles | 163 | 1516 | 128 | 1807 | 465 | 585 | 134 | 1184 | 785 | 2288 | 414 | 3487 | 369 | 611 | 962 | 1942 | 8420 |
| % Passenger Vehicles | 92.1 | 95.6 | 95.5 | 95.3 | 96.1 | 98.3 | 91.2 | 96.6 | 96.1 | 97.4 | 97 | 97 | 97.4 | 96.1 | 97.6 | 97.1 | 96.6 |
| Large 2 Axle Vehicles | 6 | 27 | 2 | 35 | 7 | 6 | 3 | 16 | 17 | 24 | 10 | 51 | 3 | 10 | 13 | 26 | 128 |
| % Large 2 Axle Vehicles | 3.4 | 1.7 | 1.5 | 1.8 | 1.4 | 1 | 2 | 1.3 | 2.1 | 1 | 2.3 | 1.4 | 0.8 | 1.6 | 1.3 | 1.3 | 1.5 |
| 3 Axle Vehicles | 3 | 15 | 1 | 19 | 5 | 0 | 1 | 6 | 4 | 11 | 2 | 17 | 3 | 7 | 5 | 15 | 57 |
| % 3 Axle Vehicles | 1.7 | 0.9 | 0.7 | 1 | 1 | 0 | 0.7 | 0.5 | 0.5 | 0.5 | 0.5 | 0.5 | 0.8 | 1.1 | 0.5 | 0.7 | 0.7 |
| 4+ Axle Trucks | 5 | 27 | 3 | 35 | 7 | 4 | 9 | 20 | 11 | 26 | 1 | 38 | 4 | 8 | 6 | 18 | 111 |
| % 4+ Axle Trucks | 2.8 | 1.7 | 2.2 | 1.8 | 1.4 | 0.7 | 6.1 | 1.6 | 1.3 | 1.1 | 0.2 | 1.1 | 1.1 | 1.3 | 0.6 | 0.9 | 1.3 |

| | Cedar Avenue Southbound | | | | Valley Boulevard Westbound | | | | Cedar Avenue Northbound | | | | Valley Boulevard Eastbound | | | | |
|---|---|---|---|---|---|---|---|---|---|---|---|---|---|---|---|---|---|
| Start Time | Left | Thru | Right | App. Total | Left | Thru | Right | App. Total | Left | Thru | Right | App. Total | Left | Thru | Right | App. Total | Int. Total |
| Peak Hour Analysis From 04:00 PM to 05:45 PM - Peak 1 of 1 | | | | | | | | | | | | | | | | | |
| Peak Hour for Entire Intersection Begins at 04:45 PM | | | | | | | | | | | | | | | | | |
| 04:45 PM | **36** | **204** | 13 | **253** | 55 | 64 | 8 | 127 | 105 | 295 | 42 | 442 | **56** | 81 | 135 | **272** | 1094 |
| 05:00 PM | 33 | 203 | 17 | 253 | **60** | 64 | 15 | 139 | 106 | 293 | 48 | 447 | 48 | 81 | 122 | 251 | 1090 |
| 05:15 PM | 20 | 196 | **23** | 239 | 60 | **69** | **24** | **153** | 106 | **302** | 51 | 459 | 51 | **83** | **136** | 270 | **1121** |
| 05:30 PM | 12 | 187 | 20 | 219 | 53 | 65 | 22 | 140 | **124** | 299 | **61** | **484** | 33 | 80 | 120 | 233 | 1076 |
| Total Volume | 101 | 790 | 73 | 964 | 228 | 262 | 69 | 559 | 441 | 1189 | 202 | 1832 | 188 | 325 | 513 | 1026 | 4381 |
| % App. Total | 10.5 | 82 | 7.6 | | 40.8 | 46.9 | 12.3 | | 24.1 | 64.9 | 11 | | 18.3 | 31.7 | 50 | | |
| PHF | .701 | .968 | .793 | .953 | .950 | .949 | .719 | .913 | .889 | .984 | .828 | .946 | .839 | .979 | .943 | .943 | .977 |

Counts Unlimited, Inc.
PO Box 1178
Corona, CA 92878
(951) 268-6268

County of San Bernardino
N/S: Cedar Avenue
E/W: Valley Boulevard
Weather: Clear

File Name : CSBCEVAPM
Site Code : 06714097
Start Date : 3/11/2014
Page No : 2

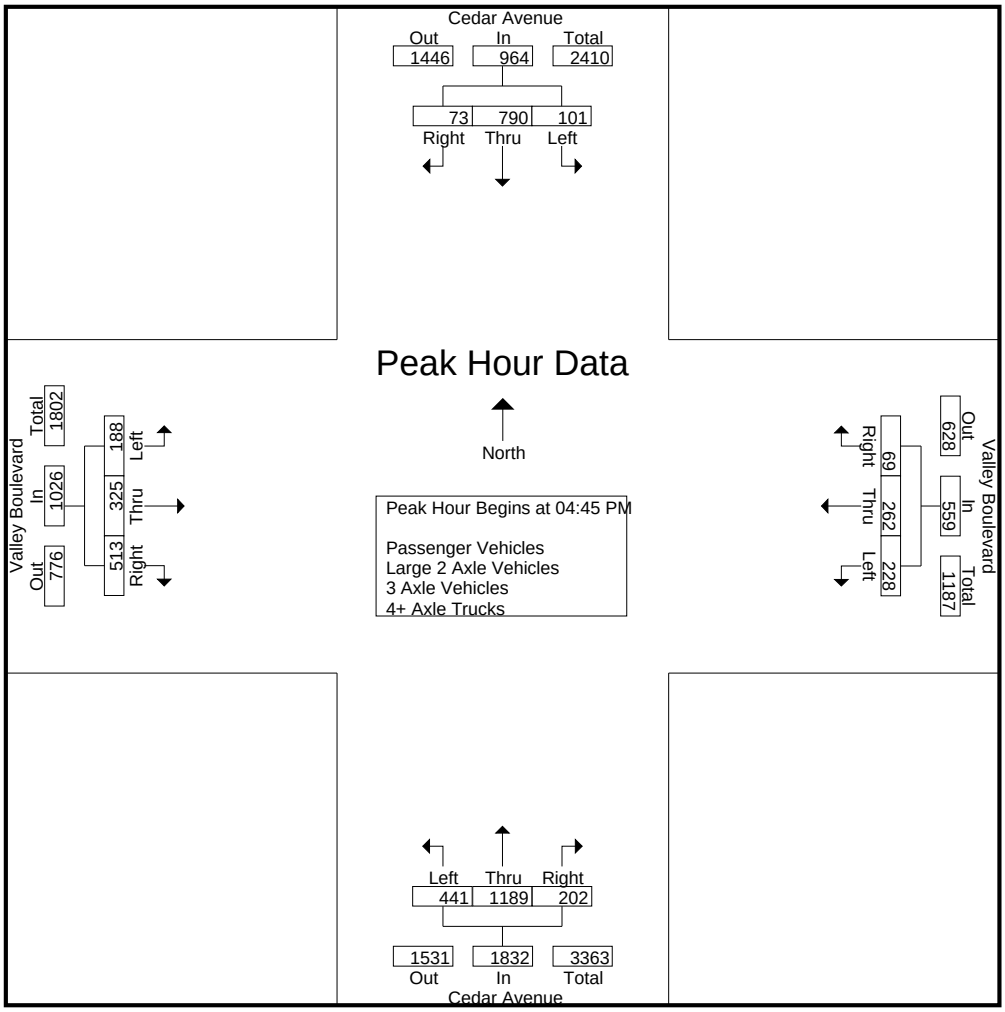


Peak Hour Analysis From 04:00 PM to 05:45 PM - Peak 1 of 1

Peak Hour for Each Approach Begins at:

| | 04:30 PM | | | | 05:00 PM | | | | 04:45 PM | | | | 04:30 PM | | | |
|---|---|---|---|---|---|---|---|---|---|---|---|---|---|---|---|---|
| +0 mins. | 17 | 194 | 13 | 224 | 60 | 64 | 15 | 139 | 105 | 295 | 42 | 442 | 51 | 78 | 132 | 261 |
| +15 mins. | **36** | **204** | 13 | **253** | 60 | 69 | **24** | 153 | 106 | 293 | 48 | 447 | **56** | 81 | 135 | **272** |
| +30 mins. | 33 | 203 | 17 | 253 | 53 | 65 | 22 | 140 | 106 | **302** | 51 | 459 | 48 | 81 | 122 | 251 |
| +45 mins. | 20 | 196 | **23** | 239 | **63** | **109** | 16 | **188** | **124** | 299 | **61** | **484** | 51 | **83** | **136** | 270 |
| Total Volume | 106 | 797 | 66 | 969 | 236 | 307 | 77 | 620 | 441 | 1189 | 202 | 1832 | 206 | 323 | 525 | 1054 |
| % App. Total | 10.9 | 82.2 | 6.8 | | 38.1 | 49.5 | 12.4 | | 24.1 | 64.9 | 11 | | 19.5 | 30.6 | 49.8 | |
| PHF | .736 | .977 | .717 | .958 | .937 | .704 | .802 | .824 | .889 | .984 | .828 | .946 | .920 | .973 | .965 | .969 |

Counts Unlimited, Inc.
PO Box 1178
Corona, CA 92878
(951) 268-6268

County of San Bernardino
N/S: Cedar Avenue
E/W: Valley Boulevard
Weather: Clear

File Name : CSBCEVAPM
Site Code : 06714097
Start Date : 3/11/2014
Page No : 1

Groups Printed- Passenger Vehicles

| | Cedar Avenue Southbound | | | | Valley Boulevard Westbound | | | | Cedar Avenue Northbound | | | | Valley Boulevard Eastbound | | | | |
|---|---|---|---|---|---|---|---|---|---|---|---|---|---|---|---|---|---|
| Start Time | Left | Thru | Right | App. Total | Left | Thru | Right | App. Total | Left | Thru | Right | App. Total | Left | Thru | Right | App. Total | Int. Total |
| 04:00 PM | 22 | 193 | 15 | 230 | 68 | 75 | 22 | 165 | 85 | 270 | 53 | 408 | 46 | 91 | 132 | 269 | 1072 |
| 04:15 PM | 13 | 190 | 22 | 225 | 56 | 74 | 20 | 150 | 98 | 299 | 52 | 449 | 40 | 56 | 100 | 196 | 1020 |
| 04:30 PM | 15 | 185 | 13 | 213 | 61 | 69 | 15 | 145 | 87 | 276 | 58 | 421 | 50 | 77 | 128 | 255 | 1034 |
| 04:45 PM | 31 | 197 | 13 | 241 | 53 | 62 | 7 | 122 | 101 | 286 | 42 | 429 | 55 | 79 | 132 | 266 | 1058 |
| Total | 81 | 765 | 63 | 909 | 238 | 280 | 64 | 582 | 371 | 1131 | 205 | 1707 | 191 | 303 | 492 | 986 | 4184 |
| 05:00 PM | 30 | 191 | 17 | 238 | 60 | 64 | 15 | 139 | 106 | 285 | 47 | 438 | 46 | 79 | 118 | 243 | 1058 |
| 05:15 PM | 20 | 188 | 19 | 227 | 57 | 69 | 20 | 146 | 104 | 298 | 49 | 451 | 51 | 80 | 135 | 266 | 1090 |
| 05:30 PM | 12 | 181 | 20 | 213 | 50 | 65 | 20 | 135 | 120 | 294 | 59 | 473 | 32 | 77 | 118 | 227 | 1048 |
| 05:45 PM | 20 | 191 | 9 | 220 | 60 | 107 | 15 | 182 | 84 | 280 | 54 | 418 | 49 | 72 | 99 | 220 | 1040 |
| Total | 82 | 751 | 65 | 898 | 227 | 305 | 70 | 602 | 414 | 1157 | 209 | 1780 | 178 | 308 | 470 | 956 | 4236 |
| Grand Total | 163 | 1516 | 128 | 1807 | 465 | 585 | 134 | 1184 | 785 | 2288 | 414 | 3487 | 369 | 611 | 962 | 1942 | 8420 |
| Apprch % | 9 | 83.9 | 7.1 | | 39.3 | 49.4 | 11.3 | | 22.5 | 65.6 | 11.9 | | 19 | 31.5 | 49.5 | | |
| Total % | 1.9 | 18 | 1.5 | 21.5 | 5.5 | 6.9 | 1.6 | 14.1 | 9.3 | 27.2 | 4.9 | 41.4 | 4.4 | 7.3 | 11.4 | 23.1 | |

| | Cedar Avenue Southbound | | | | Valley Boulevard Westbound | | | | Cedar Avenue Northbound | | | | Valley Boulevard Eastbound | | | | |
|---|---|---|---|---|---|---|---|---|---|---|---|---|---|---|---|---|---|
| Start Time | Left | Thru | Right | App. Total | Left | Thru | Right | App. Total | Left | Thru | Right | App. Total | Left | Thru | Right | App. Total | Int. Total |
| Peak Hour Analysis From 04:45 PM to 05:30 PM - Peak 1 of 1 | | | | | | | | | | | | | | | | | |
| Peak Hour for Entire Intersection Begins at 04:45 PM | | | | | | | | | | | | | | | | | |
| 04:45 PM | **31** | **197** | 13 | **241** | 53 | 62 | 7 | 122 | 101 | 286 | 42 | 429 | **55** | 79 | 132 | **266** | 1058 |
| 05:00 PM | 30 | 191 | 17 | 238 | **60** | 64 | 15 | 139 | 106 | 285 | 47 | 438 | 46 | 79 | 118 | 243 | 1058 |
| 05:15 PM | 20 | 188 | 19 | 227 | 57 | **69** | **20** | **146** | 104 | **298** | 49 | 451 | 51 | **80** | **135** | 266 | **1090** |
| 05:30 PM | 12 | 181 | **20** | 213 | 50 | 65 | 20 | 135 | **120** | 294 | **59** | **473** | 32 | 77 | 118 | 227 | 1048 |
| Total Volume | 93 | 757 | 69 | 919 | 220 | 260 | 62 | 542 | 431 | 1163 | 197 | 1791 | 184 | 315 | 503 | 1002 | 4254 |
| % App. Total | 10.1 | 82.4 | 7.5 | | 40.6 | 48 | 11.4 | | 24.1 | 64.9 | 11 | | 18.4 | 31.4 | 50.2 | | |
| PHF | .750 | .961 | .863 | .953 | .917 | .942 | .775 | .928 | .898 | .976 | .835 | .947 | .836 | .984 | .931 | .942 | .976 |

Counts Unlimited, Inc.
PO Box 1178
Corona, CA 92878
(951) 268-6268

County of San Bernardino
N/S: Cedar Avenue
E/W: Valley Boulevard
Weather: Clear

File Name : CSBCEVAPM
Site Code : 06714097
Start Date : 3/11/2014
Page No : 2

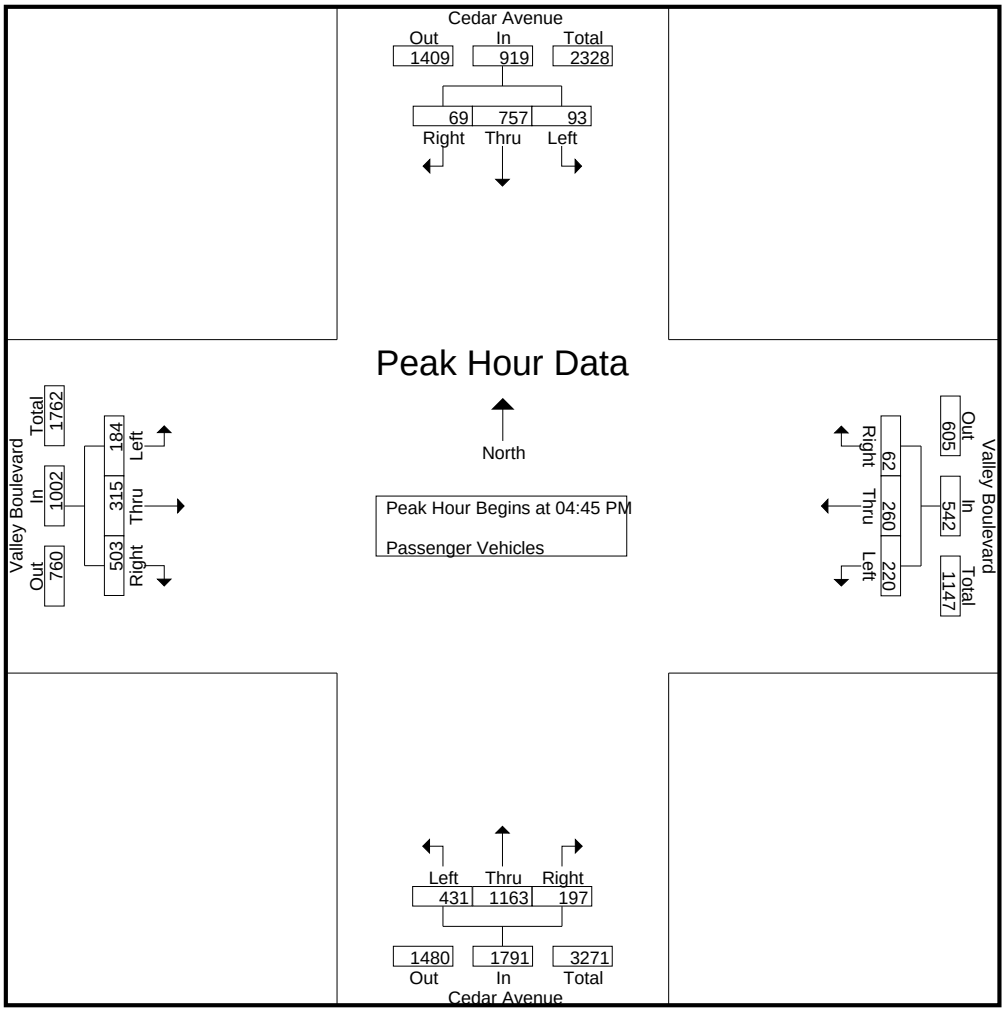


Peak Hour Analysis From 04:45 PM to 05:30 PM - Peak 1 of 1

Peak Hour for Each Approach Begins at:

| | 04:45 PM | | | | 04:45 PM | | | | 04:45 PM | | | | 04:45 PM | | | |
|---|---|---|---|---|---|---|---|---|---|---|---|---|---|---|---|---|
| +0 mins. | **31** | **197** | 13 | **241** | 53 | 62 | 7 | 122 | 101 | 286 | 42 | 429 | **55** | 79 | 132 | **266** |
| +15 mins. | 30 | 191 | 17 | 238 | **60** | 64 | 15 | 139 | 106 | 285 | 47 | 438 | 46 | 79 | 118 | 243 |
| +30 mins. | 20 | 188 | 19 | 227 | 57 | **69** | **20** | **146** | 104 | **298** | 49 | 451 | 51 | **80** | **135** | 266 |
| +45 mins. | 12 | 181 | **20** | 213 | 50 | 65 | 20 | 135 | **120** | 294 | **59** | **473** | 32 | 77 | 118 | 227 |
| Total Volume | 93 | 757 | 69 | 919 | 220 | 260 | 62 | 542 | 431 | 1163 | 197 | 1791 | 184 | 315 | 503 | 1002 |
| % App. Total | 10.1 | 82.4 | 7.5 | | 40.6 | 48 | 11.4 | | 24.1 | 64.9 | 11 | | 18.4 | 31.4 | 50.2 | |
| PHF | .750 | .961 | .863 | .953 | .917 | .942 | .775 | .928 | .898 | .976 | .835 | .947 | .836 | .984 | .931 | .942 |

Counts Unlimited, Inc.
PO Box 1178
Corona, CA 92878
(951) 268-6268

County of San Bernardino
N/S: Cedar Avenue
E/W: Valley Boulevard
Weather: Clear

File Name : CSBCEVAPM
Site Code : 06714097
Start Date : 3/11/2014
Page No : 1

Groups Printed- Large 2 Axle Vehicles

| | Cedar Avenue Southbound | | | | Valley Boulevard Westbound | | | | Cedar Avenue Northbound | | | | Valley Boulevard Eastbound | | | | |
|---|---|---|---|---|---|---|---|---|---|---|---|---|---|---|---|---|---|
| Start Time | Left | Thru | Right | App. Total | Left | Thru | Right | App. Total | Left | Thru | Right | App. Total | Left | Thru | Right | App. Total | Int. Total |
| 04:00 PM | 1 | 6 | 0 | 7 | 2 | 2 | 2 | 6 | 0 | 1 | 1 | 2 | 1 | 2 | 2 | 5 | 20 |
| 04:15 PM | 0 | 4 | 1 | 5 | 2 | 2 | 0 | 4 | 8 | 3 | 3 | 14 | 1 | 3 | 2 | 6 | 29 |
| 04:30 PM | 1 | 4 | 0 | 5 | 2 | 1 | 0 | 3 | 2 | 6 | 1 | 9 | 0 | 1 | 2 | 3 | 20 |
| 04:45 PM | 1 | 3 | 0 | 4 | 0 | 1 | 0 | 1 | 2 | 3 | 0 | 5 | 1 | 2 | 2 | 5 | 15 |
| Total | 3 | 17 | 1 | 21 | 6 | 6 | 2 | 14 | 12 | 13 | 5 | 30 | 3 | 8 | 8 | 19 | 84 |
| 05:00 PM | 2 | 1 | 0 | 3 | 0 | 0 | 0 | 0 | 0 | 4 | 1 | 5 | 0 | 0 | 1 | 1 | 9 |
| 05:15 PM | 0 | 3 | 1 | 4 | 1 | 0 | 0 | 1 | 1 | 3 | 2 | 6 | 0 | 1 | 0 | 1 | 12 |
| 05:30 PM | 0 | 3 | 0 | 3 | 0 | 0 | 0 | 0 | 2 | 1 | 1 | 4 | 0 | 1 | 2 | 3 | 10 |
| 05:45 PM | 1 | 3 | 0 | 4 | 0 | 0 | 1 | 1 | 2 | 3 | 1 | 6 | 0 | 0 | 2 | 2 | 13 |
| Total | 3 | 10 | 1 | 14 | 1 | 0 | 1 | 2 | 5 | 11 | 5 | 21 | 0 | 2 | 5 | 7 | 44 |
| Grand Total | 6 | 27 | 2 | 35 | 7 | 6 | 3 | 16 | 17 | 24 | 10 | 51 | 3 | 10 | 13 | 26 | 128 |
| Apprch % | 17.1 | 77.1 | 5.7 | | 43.8 | 37.5 | 18.8 | | 33.3 | 47.1 | 19.6 | | 11.5 | 38.5 | 50 | | |
| Total % | 4.7 | 21.1 | 1.6 | 27.3 | 5.5 | 4.7 | 2.3 | 12.5 | 13.3 | 18.8 | 7.8 | 39.8 | 2.3 | 7.8 | 10.2 | 20.3 | |

| | Cedar Avenue Southbound | | | | Valley Boulevard Westbound | | | | Cedar Avenue Northbound | | | | Valley Boulevard Eastbound | | | | |
|---|---|---|---|---|---|---|---|---|---|---|---|---|---|---|---|---|---|
| Start Time | Left | Thru | Right | App. Total | Left | Thru | Right | App. Total | Left | Thru | Right | App. Total | Left | Thru | Right | App. Total | Int. Total |
| Peak Hour Analysis From 04:45 PM to 05:30 PM - Peak 1 of 1 | | | | | | | | | | | | | | | | | |
| Peak Hour for Entire Intersection Begins at 04:45 PM | | | | | | | | | | | | | | | | | |
| 04:45 PM | 1 | **3** | 0 | **4** | 0 | **1** | 0 | **1** | **2** | 3 | 0 | 5 | **1** | **2** | **2** | **5** | **15** |
| 05:00 PM | **2** | 1 | 0 | 3 | 0 | 0 | 0 | 0 | 0 | **4** | 1 | 5 | 0 | 0 | 1 | 1 | 9 |
| 05:15 PM | 0 | 3 | **1** | 4 | **1** | 0 | 0 | 1 | 1 | 3 | **2** | **6** | 0 | 1 | 0 | 1 | 12 |
| 05:30 PM | 0 | 3 | 0 | 3 | 0 | 0 | 0 | 0 | 2 | 1 | 1 | 4 | 0 | 1 | 2 | 3 | 10 |
| Total Volume | 3 | 10 | 1 | 14 | 1 | 1 | 0 | 2 | 5 | 11 | 4 | 20 | 1 | 4 | 5 | 10 | 46 |
| % App. Total | 21.4 | 71.4 | 7.1 | | 50 | 50 | 0 | | 25 | 55 | 20 | | 10 | 40 | 50 | | |
| PHF | .375 | .833 | .250 | .875 | .250 | .250 | .000 | .500 | .625 | .688 | .500 | .833 | .250 | .500 | .625 | .500 | .767 |

Counts Unlimited, Inc.
PO Box 1178
Corona, CA 92878
(951) 268-6268

County of San Bernardino
N/S: Cedar Avenue
E/W: Valley Boulevard
Weather: Clear

File Name : CSBCEVAPM
Site Code : 06714097
Start Date : 3/11/2014
Page No : 2

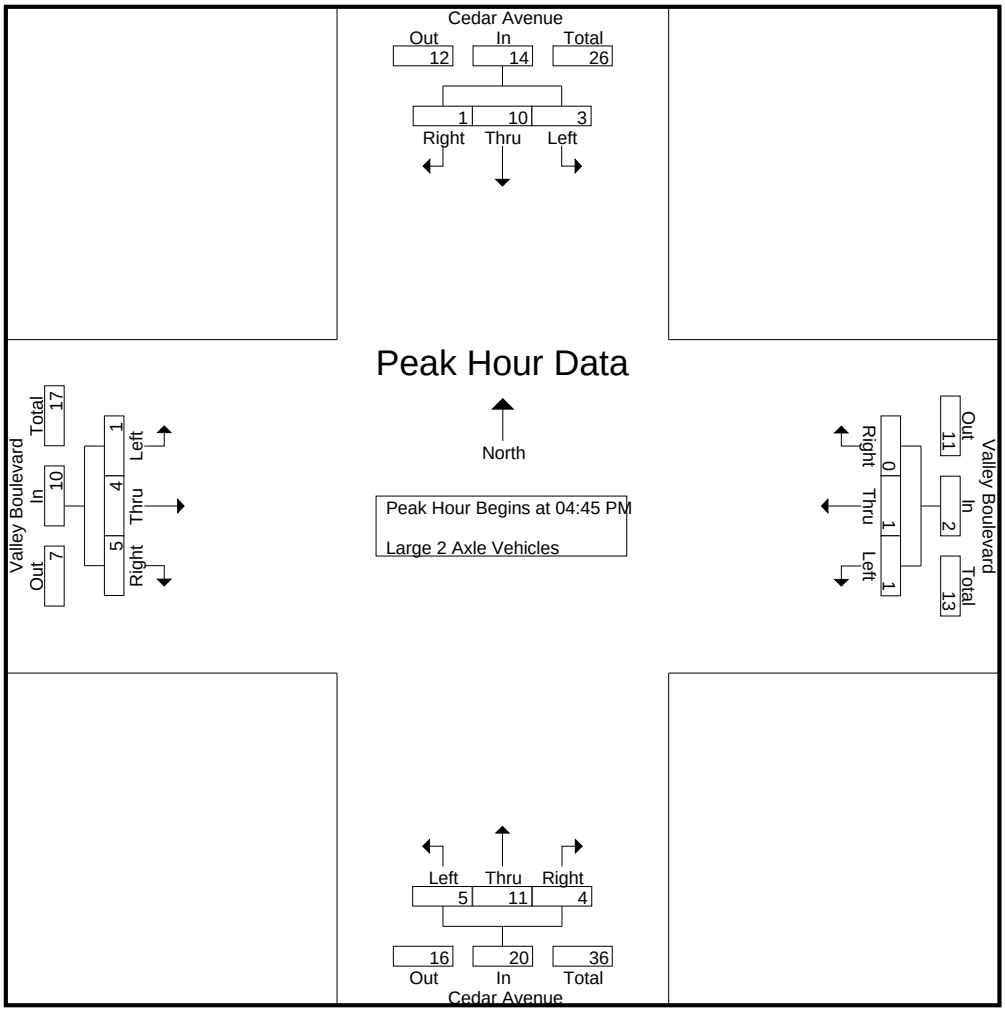


Peak Hour Analysis From 04:45 PM to 05:30 PM - Peak 1 of 1

Peak Hour for Each Approach Begins at:

| | 04:45 PM | | | | 04:45 PM | | | | 04:45 PM | | | | 04:45 PM | | | |
|---|---|---|---|---|---|---|---|---|---|---|---|---|---|---|---|---|
| +0 mins. | 1 | **3** | 0 | **4** | 0 | **1** | 0 | **1** | **2** | 3 | 0 | 5 | **1** | **2** | **2** | **5** |
| +15 mins. | **2** | 1 | 0 | 3 | 0 | 0 | 0 | 0 | 0 | **4** | 1 | 5 | 0 | 0 | 1 | 1 |
| +30 mins. | 0 | 3 | **1** | 4 | **1** | 0 | 0 | 1 | 1 | 3 | **2** | **6** | 0 | 1 | 0 | 1 |
| +45 mins. | 0 | 3 | 0 | 3 | 0 | 0 | 0 | 0 | 2 | 1 | 1 | 4 | 0 | 1 | 2 | 3 |
| Total Volume | 3 | 10 | 1 | 14 | 1 | 1 | 0 | 2 | 5 | 11 | 4 | 20 | 1 | 4 | 5 | 10 |
| % App. Total | 21.4 | 71.4 | 7.1 | | 50 | 50 | 0 | | 25 | 55 | 20 | | 10 | 40 | 50 | |
| PHF | .375 | .833 | .250 | .875 | .250 | .250 | .000 | .500 | .625 | .688 | .500 | .833 | .250 | .500 | .625 | .500 |

Counts Unlimited, Inc.
PO Box 1178
Corona, CA 92878
(951) 268-6268

County of San Bernardino
N/S: Cedar Avenue
E/W: Valley Boulevard
Weather: Clear

File Name : CSBCEVAPM
Site Code : 06714097
Start Date : 3/11/2014
Page No : 1

Groups Printed- 3 Axle Vehicles

| | Cedar Avenue Southbound | | | | Valley Boulevard Westbound | | | | Cedar Avenue Northbound | | | | Valley Boulevard Eastbound | | | | |
|---|---|---|---|---|---|---|---|---|---|---|---|---|---|---|---|---|---|
| Start Time | Left | Thru | Right | App. Total | Left | Thru | Right | App. Total | Left | Thru | Right | App. Total | Left | Thru | Right | App. Total | Int. Total |
| 04:00 PM | 0 | 0 | 0 | 0 | 0 | 0 | 0 | 0 | 0 | 0 | 1 | 1 | 0 | 2 | 0 | 2 | 3 |
| 04:15 PM | 1 | 3 | 0 | 4 | 0 | 0 | 0 | 0 | 0 | 0 | 0 | 0 | 0 | 2 | 0 | 2 | 6 |
| 04:30 PM | 0 | 1 | 0 | 1 | 0 | 0 | 0 | 0 | 2 | 2 | 0 | 4 | 1 | 0 | 2 | 3 | 8 |
| 04:45 PM | 0 | 3 | 0 | 3 | 1 | 0 | 1 | 2 | 0 | 4 | 0 | 4 | 0 | 0 | 0 | 0 | 9 |
| Total | 1 | 7 | 0 | 8 | 1 | 0 | 1 | 2 | 2 | 6 | 1 | 9 | 1 | 4 | 2 | 7 | 26 |
| 05:00 PM | 1 | 7 | 0 | 8 | 0 | 0 | 0 | 0 | 0 | 2 | 0 | 2 | 2 | 1 | 1 | 4 | 14 |
| 05:15 PM | 0 | 0 | 1 | 1 | 0 | 0 | 0 | 0 | 0 | 0 | 0 | 0 | 0 | 1 | 1 | 2 | 3 |
| 05:30 PM | 0 | 1 | 0 | 1 | 2 | 0 | 0 | 2 | 0 | 2 | 1 | 3 | 0 | 1 | 0 | 1 | 7 |
| 05:45 PM | 1 | 0 | 0 | 1 | 2 | 0 | 0 | 2 | 2 | 1 | 0 | 3 | 0 | 0 | 1 | 1 | 7 |
| Total | 2 | 8 | 1 | 11 | 4 | 0 | 0 | 4 | 2 | 5 | 1 | 8 | 2 | 3 | 3 | 8 | 31 |
| Grand Total | 3 | 15 | 1 | 19 | 5 | 0 | 1 | 6 | 4 | 11 | 2 | 17 | 3 | 7 | 5 | 15 | 57 |
| Apprch % | 15.8 | 78.9 | 5.3 | | 83.3 | 0 | 16.7 | | 23.5 | 64.7 | 11.8 | | 20 | 46.7 | 33.3 | | |
| Total % | 5.3 | 26.3 | 1.8 | 33.3 | 8.8 | 0 | 1.8 | 10.5 | 7 | 19.3 | 3.5 | 29.8 | 5.3 | 12.3 | 8.8 | 26.3 | |

| | Cedar Avenue Southbound | | | | Valley Boulevard Westbound | | | | Cedar Avenue Northbound | | | | Valley Boulevard Eastbound | | | | |
|---|---|---|---|---|---|---|---|---|---|---|---|---|---|---|---|---|---|
| Start Time | Left | Thru | Right | App. Total | Left | Thru | Right | App. Total | Left | Thru | Right | App. Total | Left | Thru | Right | App. Total | Int. Total |
| Peak Hour Analysis From 04:45 PM to 05:30 PM - Peak 1 of 1 | | | | | | | | | | | | | | | | | |
| Peak Hour for Entire Intersection Begins at 04:45 PM | | | | | | | | | | | | | | | | | |
| 04:45 PM | 0 | 3 | 0 | 3 | 1 | 0 | **1** | **2** | 0 | **4** | 0 | **4** | 0 | 0 | 0 | 0 | 9 |
| 05:00 PM | **1** | **7** | 0 | **8** | 0 | 0 | 0 | 0 | 0 | 2 | 0 | 2 | **2** | **1** | **1** | **4** | **14** |
| 05:15 PM | 0 | 0 | **1** | 1 | 0 | 0 | 0 | 0 | 0 | 0 | 0 | 0 | 0 | 1 | 1 | 2 | 3 |
| 05:30 PM | 0 | 1 | 0 | 1 | **2** | 0 | 0 | 2 | 0 | 2 | **1** | 3 | 0 | 1 | 0 | 1 | 7 |
| Total Volume | 1 | 11 | 1 | 13 | 3 | 0 | 1 | 4 | 0 | 8 | 1 | 9 | 2 | 3 | 2 | 7 | 33 |
| % App. Total | 7.7 | 84.6 | 7.7 | | 75 | 0 | 25 | | 0 | 88.9 | 11.1 | | 28.6 | 42.9 | 28.6 | | |
| PHF | .250 | .393 | .250 | .406 | .375 | .000 | .250 | .500 | .000 | .500 | .250 | .563 | .250 | .750 | .500 | .438 | .589 |

Counts Unlimited, Inc.
PO Box 1178
Corona, CA 92878
(951) 268-6268

County of San Bernardino
N/S: Cedar Avenue
E/W: Valley Boulevard
Weather: Clear

File Name : CSBCEVAPM
Site Code : 06714097
Start Date : 3/11/2014
Page No : 2

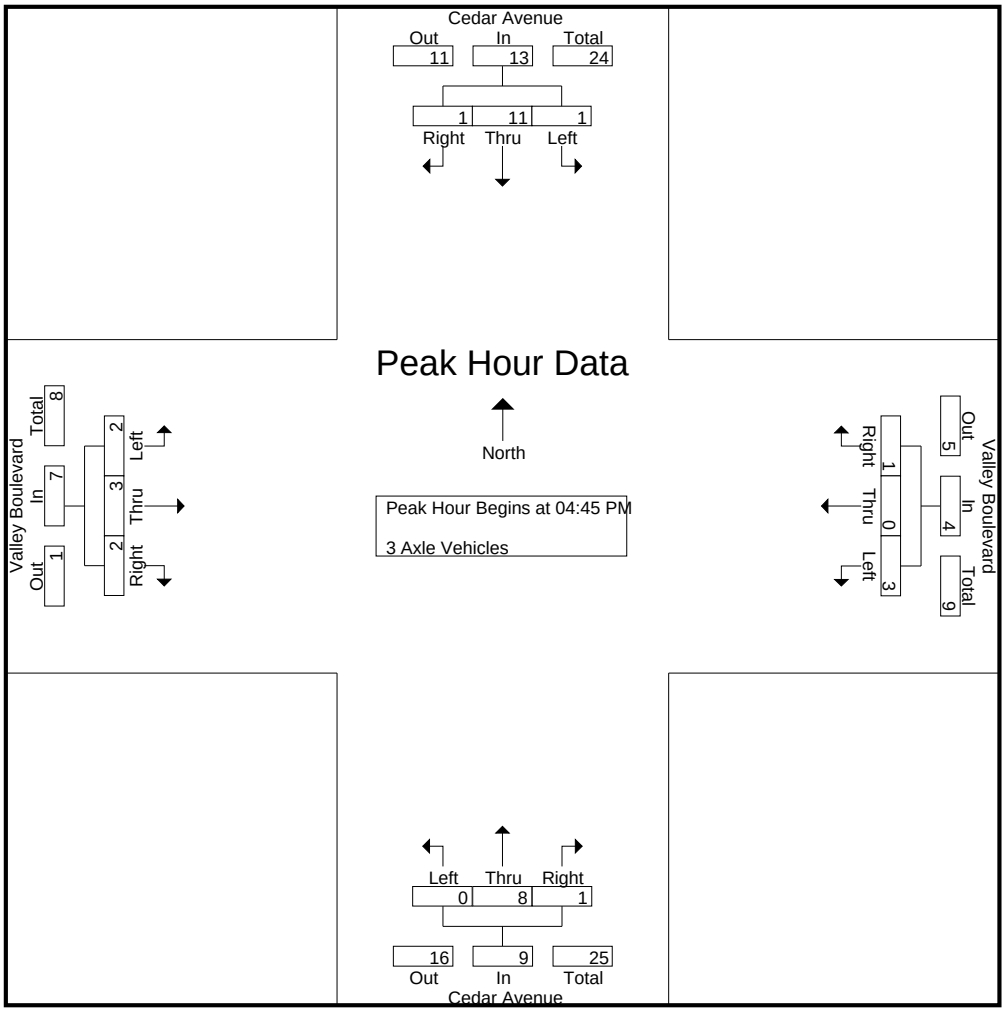


Peak Hour Analysis From 04:45 PM to 05:30 PM - Peak 1 of 1

Peak Hour for Each Approach Begins at:

| | 04:45 PM | | | | 04:45 PM | | | | 04:45 PM | | | | 04:45 PM | | | |
|---|---|---|---|---|---|---|---|---|---|---|---|---|---|---|---|---|
| +0 mins. | 0 | 3 | 0 | 3 | 1 | 0 | **1** | **2** | 0 | **4** | 0 | **4** | 0 | 0 | 0 | 0 |
| +15 mins. | **1** | **7** | 0 | **8** | 0 | 0 | 0 | 0 | 0 | 2 | 0 | 2 | **2** | **1** | **1** | **4** |
| +30 mins. | 0 | 0 | **1** | 1 | 0 | 0 | 0 | 0 | 0 | 0 | 0 | 0 | 0 | 1 | 1 | 2 |
| +45 mins. | 0 | 1 | 0 | 1 | **2** | 0 | 0 | 2 | 0 | 2 | **1** | 3 | 0 | 1 | 0 | 1 |
| Total Volume | 1 | 11 | 1 | 13 | 3 | 0 | 1 | 4 | 0 | 8 | 1 | 9 | 2 | 3 | 2 | 7 |
| % App. Total | 7.7 | 84.6 | 7.7 | | 75 | 0 | 25 | | 0 | 88.9 | 11.1 | | 28.6 | 42.9 | 28.6 | |
| PHF | .250 | .393 | .250 | .406 | .375 | .000 | .250 | .500 | .000 | .500 | .250 | .563 | .250 | .750 | .500 | .438 |

Counts Unlimited, Inc.
PO Box 1178
Corona, CA 92878
(951) 268-6268

County of San Bernardino
N/S: Cedar Avenue
E/W: Valley Boulevard
Weather: Clear

File Name : CSBCEVAPM
Site Code : 06714097
Start Date : 3/11/2014
Page No : 1

Groups Printed- 4+ Axle Trucks

| | Cedar Avenue Southbound | | | | Valley Boulevard Westbound | | | | Cedar Avenue Northbound | | | | Valley Boulevard Eastbound | | | | |
|---|---|---|---|---|---|---|---|---|---|---|---|---|---|---|---|---|---|
| Start Time | Left | Thru | Right | App. Total | Left | Thru | Right | App. Total | Left | Thru | Right | App. Total | Left | Thru | Right | App. Total | Int. Total |
| 04:00 PM | 0 | 6 | 1 | 7 | 1 | 0 | 0 | 1 | 1 | 5 | 0 | 6 | 2 | 1 | 2 | 5 | 19 |
| 04:15 PM | 0 | 4 | 0 | 4 | 0 | 1 | 2 | 3 | 1 | 5 | 0 | 6 | 1 | 2 | 0 | 3 | 16 |
| 04:30 PM | 1 | 4 | 0 | 5 | 1 | 0 | 1 | 2 | 1 | 4 | 1 | 6 | 0 | 0 | 0 | 0 | 13 |
| 04:45 PM | 4 | 1 | 0 | 5 | 1 | 1 | 0 | 2 | 2 | 2 | 0 | 4 | 0 | 0 | 1 | 1 | 12 |
| Total | 5 | 15 | 1 | 21 | 3 | 2 | 3 | 8 | 5 | 16 | 1 | 22 | 3 | 3 | 3 | 9 | 60 |
| 05:00 PM | 0 | 4 | 0 | 4 | 0 | 0 | 0 | 0 | 0 | 2 | 0 | 2 | 0 | 1 | 2 | 3 | 9 |
| 05:15 PM | 0 | 5 | 2 | 7 | 2 | 0 | 4 | 6 | 1 | 1 | 0 | 2 | 0 | 1 | 0 | 1 | 16 |
| 05:30 PM | 0 | 2 | 0 | 2 | 1 | 0 | 2 | 3 | 2 | 2 | 0 | 4 | 1 | 1 | 0 | 2 | 11 |
| 05:45 PM | 0 | 1 | 0 | 1 | 1 | 2 | 0 | 3 | 3 | 5 | 0 | 8 | 0 | 2 | 1 | 3 | 15 |
| Total | 0 | 12 | 2 | 14 | 4 | 2 | 6 | 12 | 6 | 10 | 0 | 16 | 1 | 5 | 3 | 9 | 51 |
| Grand Total | 5 | 27 | 3 | 35 | 7 | 4 | 9 | 20 | 11 | 26 | 1 | 38 | 4 | 8 | 6 | 18 | 111 |
| Apprch % | 14.3 | 77.1 | 8.6 | | 35 | 20 | 45 | | 28.9 | 68.4 | 2.6 | | 22.2 | 44.4 | 33.3 | | |
| Total % | 4.5 | 24.3 | 2.7 | 31.5 | 6.3 | 3.6 | 8.1 | 18 | 9.9 | 23.4 | 0.9 | 34.2 | 3.6 | 7.2 | 5.4 | 16.2 | |

| | Cedar Avenue Southbound | | | | Valley Boulevard Westbound | | | | Cedar Avenue Northbound | | | | Valley Boulevard Eastbound | | | | |
|---|---|---|---|---|---|---|---|---|---|---|---|---|---|---|---|---|---|
| Start Time | Left | Thru | Right | App. Total | Left | Thru | Right | App. Total | Left | Thru | Right | App. Total | Left | Thru | Right | App. Total | Int. Total |
| Peak Hour Analysis From 04:45 PM to 05:30 PM - Peak 1 of 1 | | | | | | | | | | | | | | | | | |
| Peak Hour for Entire Intersection Begins at 04:45 PM | | | | | | | | | | | | | | | | | |
| 04:45 PM | **4** | 1 | 0 | 5 | 1 | **1** | 0 | 2 | **2** | **2** | 0 | **4** | 0 | 0 | 1 | 1 | 12 |
| 05:00 PM | 0 | 4 | 0 | 4 | 0 | 0 | 0 | 0 | 0 | 2 | 0 | 2 | 0 | **1** | **2** | **3** | 9 |
| 05:15 PM | 0 | **5** | **2** | **7** | **2** | 0 | **4** | **6** | 1 | 1 | 0 | 2 | 0 | 1 | 0 | 1 | **16** |
| 05:30 PM | 0 | 2 | 0 | 2 | 1 | 0 | 2 | 3 | 2 | 2 | 0 | 4 | **1** | 1 | 0 | 2 | 11 |
| Total Volume | 4 | 12 | 2 | 18 | 4 | 1 | 6 | 11 | 5 | 7 | 0 | 12 | 1 | 3 | 3 | 7 | 48 |
| % App. Total | 22.2 | 66.7 | 11.1 | | 36.4 | 9.1 | 54.5 | | 41.7 | 58.3 | 0 | | 14.3 | 42.9 | 42.9 | | |
| PHF | .250 | .600 | .250 | .643 | .500 | .250 | .375 | .458 | .625 | .875 | .000 | .750 | .250 | .750 | .375 | .583 | .750 |

Counts Unlimited, Inc.
PO Box 1178
Corona, CA 92878
(951) 268-6268

County of San Bernardino
N/S: Cedar Avenue
E/W: Valley Boulevard
Weather: Clear

File Name : CSBCEVAPM
Site Code : 06714097
Start Date : 3/11/2014
Page No : 2

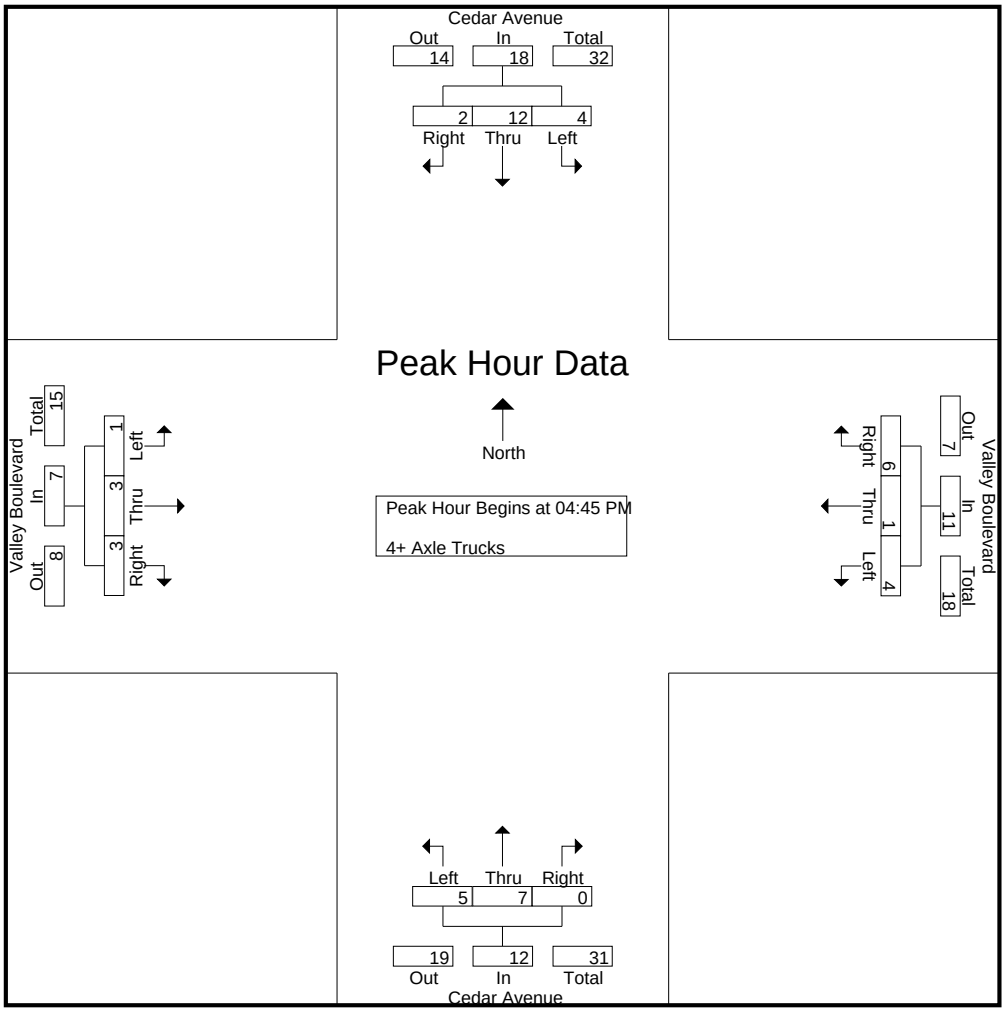


Peak Hour Analysis From 04:45 PM to 05:30 PM - Peak 1 of 1

Peak Hour for Each Approach Begins at:

| | 04:45 PM | | | | 04:45 PM | | | | 04:45 PM | | | | 04:45 PM | | | |
|---|---|---|---|---|---|---|---|---|---|---|---|---|---|---|---|---|
| +0 mins. | **4** | 1 | 0 | 5 | 1 | **1** | 0 | 2 | **2** | **2** | 0 | **4** | 0 | 0 | 1 | 1 |
| +15 mins. | 0 | 4 | 0 | 4 | 0 | 0 | 0 | 0 | 0 | 2 | 0 | 2 | 0 | **1** | **2** | **3** |
| +30 mins. | 0 | **5** | **2** | **7** | **2** | 0 | **4** | **6** | 1 | 1 | 0 | 2 | 0 | 1 | 0 | 1 |
| +45 mins. | 0 | 2 | 0 | 2 | 1 | 0 | 2 | 3 | 2 | 2 | 0 | 4 | **1** | 1 | 0 | 2 |
| Total Volume | 4 | 12 | 2 | 18 | 4 | 1 | 6 | 11 | 5 | 7 | 0 | 12 | 1 | 3 | 3 | 7 |
| % App. Total | 22.2 | 66.7 | 11.1 | | 36.4 | 9.1 | 54.5 | | 41.7 | 58.3 | 0 | | 14.3 | 42.9 | 42.9 | |
| PHF | .250 | .600 | .250 | .643 | .500 | .250 | .375 | .458 | .625 | .875 | .000 | .750 | .250 | .750 | .375 | .583 |

Counts Unlimited, Inc.
PO Box 1178
Corona, CA 92878
(951) 268-6268

County of San Bernardino
N/S: Cedar Avenue
E/W: I-10 Westbound On/Off Ramps
Weather: Clear

File Name : CSBCE10WAM
Site Code : 06714097
Start Date : 3/11/2014
Page No : 1

Groups Printed- Passenger Vehicles - Large 2 Axle Vehicles - 3 Axle Vehicles - 4+ Axle Trucks

| | Cedar Avenue Southbound | | | | I-10 Westbound Off Ramp Westbound | | | | Cedar Avenue Northbound | | | | I-10 Westbound On Ramp Eastbound | | | | |
|---|---|---|---|---|---|---|---|---|---|---|---|---|---|---|---|---|---|
| Start Time | Left | Thru | Right | App. Total | Left | Thru | Right | App. Total | Left | Thru | Right | App. Total | Left | Thru | Right | App. Total | Int. Total |
| 07:00 AM | 0 | 246 | 237 | 483 | 41 | 0 | 81 | 122 | 71 | 249 | 0 | 320 | 0 | 0 | 0 | 0 | 925 |
| 07:15 AM | 0 | 274 | 254 | 528 | 59 | 0 | 83 | 142 | 83 | 266 | 0 | 349 | 0 | 0 | 0 | 0 | 1019 |
| 07:30 AM | 0 | 319 | 231 | 550 | 60 | 0 | 114 | 174 | 74 | 287 | 0 | 361 | 0 | 0 | 0 | 0 | 1085 |
| 07:45 AM | 0 | 308 | 167 | 475 | 79 | 1 | 116 | 196 | 65 | 294 | 0 | 359 | 0 | 0 | 0 | 0 | 1030 |
| Total | 0 | 1147 | 889 | 2036 | 239 | 1 | 394 | 634 | 293 | 1096 | 0 | 1389 | 0 | 0 | 0 | 0 | 4059 |
| 08:00 AM | 0 | 243 | 158 | 401 | 48 | 1 | 95 | 144 | 45 | 198 | 0 | 243 | 0 | 0 | 0 | 0 | 788 |
| 08:15 AM | 0 | 209 | 178 | 387 | 41 | 0 | 88 | 129 | 56 | 189 | 0 | 245 | 0 | 0 | 0 | 0 | 761 |
| 08:30 AM | 0 | 228 | 165 | 393 | 37 | 0 | 56 | 93 | 56 | 180 | 0 | 236 | 0 | 0 | 0 | 0 | 722 |
| 08:45 AM | 0 | 200 | 135 | 335 | 37 | 1 | 73 | 111 | 47 | 184 | 0 | 231 | 0 | 0 | 0 | 0 | 677 |
| Total | 0 | 880 | 636 | 1516 | 163 | 2 | 312 | 477 | 204 | 751 | 0 | 955 | 0 | 0 | 0 | 0 | 2948 |
| Grand Total | 0 | 2027 | 1525 | 3552 | 402 | 3 | 706 | 1111 | 497 | 1847 | 0 | 2344 | 0 | 0 | 0 | 0 | 7007 |
| Apprch % | 0 | 57.1 | 42.9 | | 36.2 | 0.3 | 63.5 | | 21.2 | 78.8 | 0 | | 0 | 0 | 0 | | |
| Total % | 0 | 28.9 | 21.8 | 50.7 | 5.7 | 0 | 10.1 | 15.9 | 7.1 | 26.4 | 0 | 33.5 | 0 | 0 | 0 | 0 | |
| Passenger Vehicles | 0 | 1951 | 1456 | 3407 | 363 | 2 | 665 | 1030 | 416 | 1730 | 0 | 2146 | 0 | 0 | 0 | 0 | 6583 |
| % Passenger Vehicles | 0 | 96.3 | 95.5 | 95.9 | 90.3 | 66.7 | 94.2 | 92.7 | 83.7 | 93.7 | 0 | 91.6 | 0 | 0 | 0 | 0 | 93.9 |
| Large 2 Axle Vehicles | 0 | 47 | 26 | 73 | 21 | 1 | 29 | 51 | 43 | 66 | 0 | 109 | 0 | 0 | 0 | 0 | 233 |
| % Large 2 Axle Vehicles | 0 | 2.3 | 1.7 | 2.1 | 5.2 | 33.3 | 4.1 | 4.6 | 8.7 | 3.6 | 0 | 4.7 | 0 | 0 | 0 | 0 | 3.3 |
| 3 Axle Vehicles | 0 | 8 | 4 | 12 | 6 | 0 | 1 | 7 | 10 | 19 | 0 | 29 | 0 | 0 | 0 | 0 | 48 |
| % 3 Axle Vehicles | 0 | 0.4 | 0.3 | 0.3 | 1.5 | 0 | 0.1 | 0.6 | 2 | 1 | 0 | 1.2 | 0 | 0 | 0 | 0 | 0.7 |
| 4+ Axle Trucks | 0 | 21 | 39 | 60 | 12 | 0 | 11 | 23 | 28 | 32 | 0 | 60 | 0 | 0 | 0 | 0 | 143 |
| % 4+ Axle Trucks | 0 | 1 | 2.6 | 1.7 | 3 | 0 | 1.6 | 2.1 | 5.6 | 1.7 | 0 | 2.6 | 0 | 0 | 0 | 0 | 2 |

| | Cedar Avenue Southbound | | | | I-10 Westbound Off Ramp Westbound | | | | Cedar Avenue Northbound | | | | I-10 Westbound On Ramp Eastbound | | | | |
|---|---|---|---|---|---|---|---|---|---|---|---|---|---|---|---|---|---|
| Start Time | Left | Thru | Right | App. Total | Left | Thru | Right | App. Total | Left | Thru | Right | App. Total | Left | Thru | Right | App. Total | Int. Total |
| Peak Hour Analysis From 07:00 AM to 08:45 AM - Peak 1 of 1 | | | | | | | | | | | | | | | | | |
| Peak Hour for Entire Intersection Begins at 07:00 AM | | | | | | | | | | | | | | | | | |
| 07:00 AM | 0 | 246 | 237 | 483 | 41 | 0 | 81 | 122 | 71 | 249 | 0 | 320 | 0 | 0 | 0 | 0 | 925 |
| 07:15 AM | 0 | 274 | **254** | 528 | 59 | 0 | 83 | 142 | **83** | 266 | 0 | 349 | 0 | 0 | 0 | 0 | 1019 |
| 07:30 AM | 0 | **319** | 231 | **550** | 60 | 0 | 114 | 174 | 74 | 287 | 0 | **361** | 0 | 0 | 0 | 0 | **1085** |
| 07:45 AM | 0 | 308 | 167 | 475 | **79** | **1** | **116** | **196** | 65 | **294** | 0 | 359 | 0 | 0 | 0 | 0 | 1030 |
| Total Volume | 0 | 1147 | 889 | 2036 | 239 | 1 | 394 | 634 | 293 | 1096 | 0 | 1389 | 0 | 0 | 0 | 0 | 4059 |
| % App. Total | 0 | 56.3 | 43.7 | | 37.7 | 0.2 | 62.1 | | 21.1 | 78.9 | 0 | | 0 | 0 | 0 | | |
| PHF | .000 | .899 | .875 | .925 | .756 | .250 | .849 | .809 | .883 | .932 | .000 | .962 | .000 | .000 | .000 | .000 | .935 |

Counts Unlimited, Inc.
PO Box 1178
Corona, CA 92878
(951) 268-6268

County of San Bernardino
N/S: Cedar Avenue
E/W: I-10 Westbound On/Off Ramps
Weather: Clear

File Name : CSBCE10WAM
Site Code : 06714097
Start Date : 3/11/2014
Page No : 2

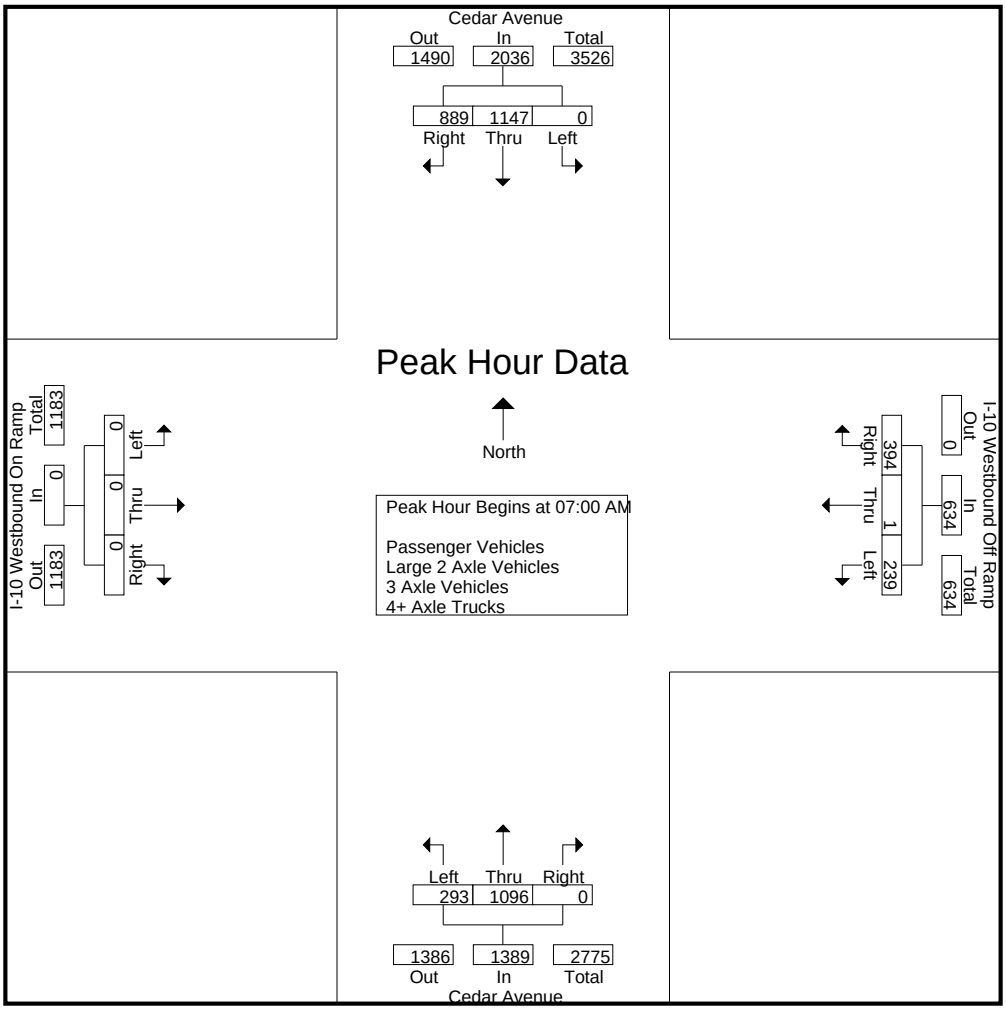


Peak Hour Analysis From 07:00 AM to 08:45 AM - Peak 1 of 1

Peak Hour for Each Approach Begins at:

| | 07:00 AM | | | | 07:15 AM | | | | 07:00 AM | | | | 07:00 AM | | | |
|---|---|---|---|---|---|---|---|---|---|---|---|---|---|---|---|---|
| +0 mins. | 0 | 246 | 237 | 483 | 59 | 0 | 83 | 142 | 71 | 249 | 0 | 320 | 0 | 0 | 0 | 0 |
| +15 mins. | 0 | 274 | **254** | 528 | 60 | 0 | 114 | 174 | **83** | 266 | 0 | 349 | 0 | 0 | 0 | 0 |
| +30 mins. | 0 | **319** | 231 | **550** | **79** | **1** | **116** | **196** | 74 | 287 | 0 | **361** | 0 | 0 | 0 | 0 |
| +45 mins. | 0 | 308 | 167 | 475 | 48 | 1 | 95 | 144 | 65 | **294** | 0 | 359 | 0 | 0 | 0 | 0 |
| Total Volume | 0 | 1147 | 889 | 2036 | 246 | 2 | 408 | 656 | 293 | 1096 | 0 | 1389 | 0 | 0 | 0 | 0 |
| % App. Total | 0 | 56.3 | 43.7 | | 37.5 | 0.3 | 62.2 | | 21.1 | 78.9 | 0 | | 0 | 0 | 0 | |
| PHF | .000 | .899 | .875 | .925 | .778 | .500 | .879 | .837 | .883 | .932 | .000 | .962 | .000 | .000 | .000 | .000 |

Counts Unlimited, Inc.
PO Box 1178
Corona, CA 92878
(951) 268-6268

County of San Bernardino
N/S: Cedar Avenue
E/W: I-10 Westbound On/Off Ramps
Weather: Clear

File Name : CSBCE10WAM
Site Code : 06714097
Start Date : 3/11/2014
Page No : 1

Groups Printed- Passenger Vehicles

| | Cedar Avenue Southbound | | | | I-10 Westbound Off Ramp Westbound | | | | Cedar Avenue Northbound | | | | I-10 Westbound On Ramp Eastbound | | | | |
|---|---|---|---|---|---|---|---|---|---|---|---|---|---|---|---|---|---|
| Start Time | Left | Thru | Right | App. Total | Left | Thru | Right | App. Total | Left | Thru | Right | App. Total | Left | Thru | Right | App. Total | Int. Total |
| 07:00 AM | 0 | 239 | 231 | 470 | 36 | 0 | 78 | 114 | 61 | 232 | 0 | 293 | 0 | 0 | 0 | 0 | 877 |
| 07:15 AM | 0 | 266 | 247 | 513 | 54 | 0 | 80 | 134 | 70 | 250 | 0 | 320 | 0 | 0 | 0 | 0 | 967 |
| 07:30 AM | 0 | 307 | 226 | 533 | 51 | 0 | 111 | 162 | 62 | 276 | 0 | 338 | 0 | 0 | 0 | 0 | 1033 |
| 07:45 AM | 0 | 298 | 156 | 454 | 71 | 1 | 109 | 181 | 57 | 283 | 0 | 340 | 0 | 0 | 0 | 0 | 975 |
| Total | 0 | 1110 | 860 | 1970 | 212 | 1 | 378 | 591 | 250 | 1041 | 0 | 1291 | 0 | 0 | 0 | 0 | 3852 |
| | | | | | | | | | | | | | | | | | |
| 08:00 AM | 0 | 234 | 148 | 382 | 47 | 0 | 86 | 133 | 36 | 178 | 0 | 214 | 0 | 0 | 0 | 0 | 729 |
| 08:15 AM | 0 | 203 | 163 | 366 | 36 | 0 | 84 | 120 | 51 | 180 | 0 | 231 | 0 | 0 | 0 | 0 | 717 |
| 08:30 AM | 0 | 217 | 156 | 373 | 34 | 0 | 53 | 87 | 47 | 166 | 0 | 213 | 0 | 0 | 0 | 0 | 673 |
| 08:45 AM | 0 | 187 | 129 | 316 | 34 | 1 | 64 | 99 | 32 | 165 | 0 | 197 | 0 | 0 | 0 | 0 | 612 |
| Total | 0 | 841 | 596 | 1437 | 151 | 1 | 287 | 439 | 166 | 689 | 0 | 855 | 0 | 0 | 0 | 0 | 2731 |
| | | | | | | | | | | | | | | | | | |
| Grand Total | 0 | 1951 | 1456 | 3407 | 363 | 2 | 665 | 1030 | 416 | 1730 | 0 | 2146 | 0 | 0 | 0 | 0 | 6583 |
| Apprch % | 0 | 57.3 | 42.7 | | 35.2 | 0.2 | 64.6 | | 19.4 | 80.6 | 0 | | 0 | 0 | 0 | | |
| Total % | 0 | 29.6 | 22.1 | 51.8 | 5.5 | 0 | 10.1 | 15.6 | 6.3 | 26.3 | 0 | 32.6 | 0 | 0 | 0 | 0 | |

| | Cedar Avenue Southbound | | | | I-10 Westbound Off Ramp Westbound | | | | Cedar Avenue Northbound | | | | I-10 Westbound On Ramp Eastbound | | | | |
|---|---|---|---|---|---|---|---|---|---|---|---|---|---|---|---|---|---|
| Start Time | Left | Thru | Right | App. Total | Left | Thru | Right | App. Total | Left | Thru | Right | App. Total | Left | Thru | Right | App. Total | Int. Total |
| Peak Hour Analysis From 07:00 AM to 07:45 AM - Peak 1 of 1 | | | | | | | | | | | | | | | | | |
| Peak Hour for Entire Intersection Begins at 07:00 AM | | | | | | | | | | | | | | | | | |
| 07:00 AM | 0 | 239 | 231 | 470 | 36 | 0 | 78 | 114 | 61 | 232 | 0 | 293 | 0 | 0 | 0 | 0 | 877 |
| 07:15 AM | 0 | 266 | **247** | 513 | 54 | 0 | 80 | 134 | **70** | 250 | 0 | 320 | 0 | 0 | 0 | 0 | 967 |
| 07:30 AM | 0 | **307** | 226 | **533** | 51 | 0 | **111** | 162 | 62 | 276 | 0 | 338 | 0 | 0 | 0 | 0 | **1033** |
| 07:45 AM | 0 | 298 | 156 | 454 | **71** | **1** | 109 | **181** | 57 | **283** | 0 | **340** | 0 | 0 | 0 | 0 | 975 |
| Total Volume | 0 | 1110 | 860 | 1970 | 212 | 1 | 378 | 591 | 250 | 1041 | 0 | 1291 | 0 | 0 | 0 | 0 | 3852 |
| % App. Total | 0 | 56.3 | 43.7 | | 35.9 | 0.2 | 64 | | 19.4 | 80.6 | 0 | | 0 | 0 | 0 | | |
| PHF | .000 | .904 | .870 | .924 | .746 | .250 | .851 | .816 | .893 | .920 | .000 | .949 | .000 | .000 | .000 | .000 | .932 |

Counts Unlimited, Inc.
PO Box 1178
Corona, CA 92878
(951) 268-6268

County of San Bernardino
N/S: Cedar Avenue
E/W: I-10 Westbound On/Off Ramps
Weather: Clear

File Name : CSBCE10WAM
Site Code : 06714097
Start Date : 3/11/2014
Page No : 2

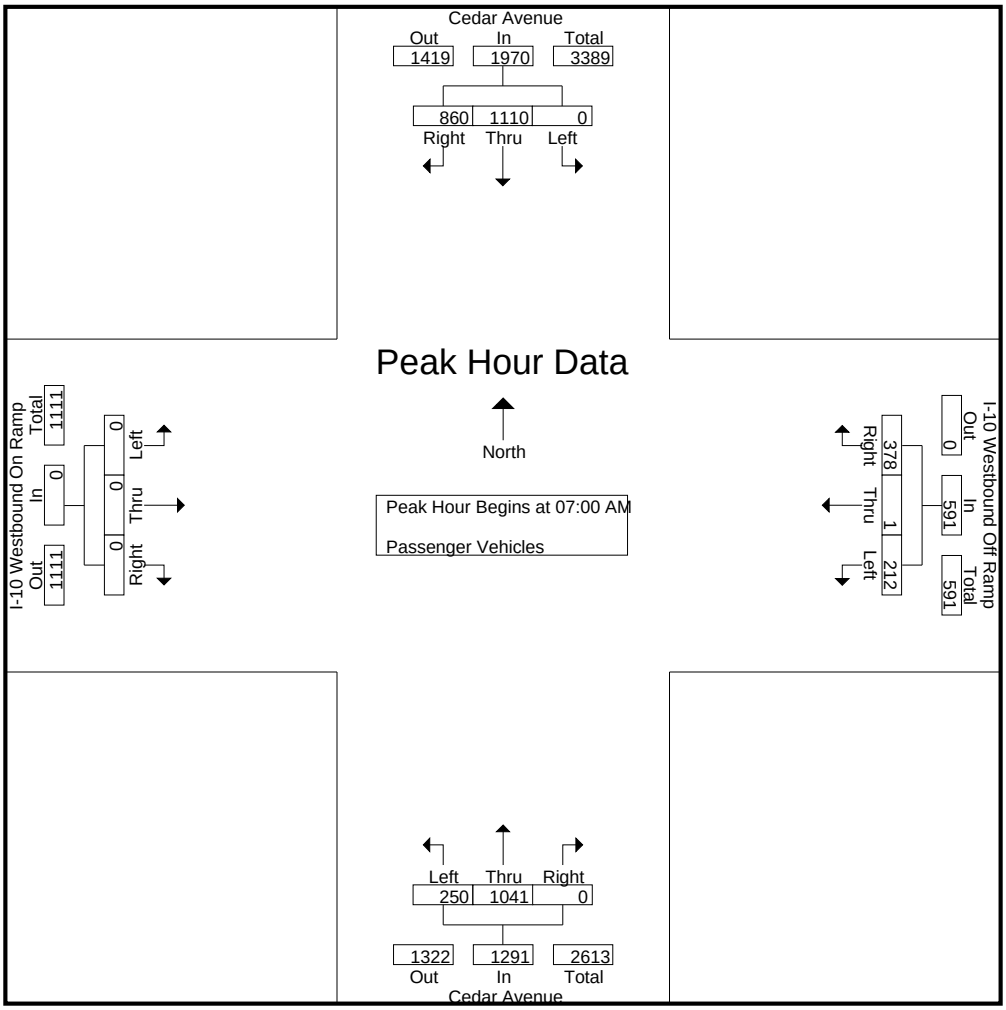


Peak Hour Analysis From 07:00 AM to 07:45 AM - Peak 1 of 1

Peak Hour for Each Approach Begins at:

| | 07:00 AM | | | | 07:00 AM | | | | 07:00 AM | | | | 07:00 AM | | | |
|---|---|---|---|---|---|---|---|---|---|---|---|---|---|---|---|---|
| +0 mins. | 0 | 239 | 231 | 470 | 36 | 0 | 78 | 114 | 61 | 232 | 0 | 293 | 0 | 0 | 0 | 0 |
| +15 mins. | 0 | 266 | **247** | 513 | 54 | 0 | 80 | 134 | **70** | 250 | 0 | 320 | 0 | 0 | 0 | 0 |
| +30 mins. | 0 | **307** | 226 | **533** | 51 | 0 | **111** | 162 | 62 | 276 | 0 | 338 | 0 | 0 | 0 | 0 |
| +45 mins. | 0 | 298 | 156 | 454 | **71** | **1** | 109 | **181** | 57 | **283** | 0 | **340** | 0 | 0 | 0 | 0 |
| Total Volume | 0 | 1110 | 860 | 1970 | 212 | 1 | 378 | 591 | 250 | 1041 | 0 | 1291 | 0 | 0 | 0 | 0 |
| % App. Total | 0 | 56.3 | 43.7 | | 35.9 | 0.2 | 64 | | 19.4 | 80.6 | 0 | | 0 | 0 | 0 | |
| PHF | .000 | .904 | .870 | .924 | .746 | .250 | .851 | .816 | .893 | .920 | .000 | .949 | .000 | .000 | .000 | .000 |

Counts Unlimited, Inc.
PO Box 1178
Corona, CA 92878
(951) 268-6268

County of San Bernardino
N/S: Cedar Avenue
E/W: I-10 Westbound On/Off Ramps
Weather: Clear

File Name : CSBCE10WAM
Site Code : 06714097
Start Date : 3/11/2014
Page No : 1

Groups Printed- Large 2 Axle Vehicles

| | Cedar Avenue Southbound | | | | I-10 Westbound Off Ramp Westbound | | | | Cedar Avenue Northbound | | | | I-10 Westbound On Ramp Eastbound | | | | |
|---|---|---|---|---|---|---|---|---|---|---|---|---|---|---|---|---|---|
| Start Time | Left | Thru | Right | App. Total | Left | Thru | Right | App. Total | Left | Thru | Right | App. Total | Left | Thru | Right | App. Total | Int. Total |
| 07:00 AM | 0 | 4 | 2 | 6 | 4 | 0 | 2 | 6 | 4 | 5 | 0 | 9 | 0 | 0 | 0 | 0 | 21 |
| 07:15 AM | 0 | 4 | 2 | 6 | 3 | 0 | 2 | 5 | 9 | 8 | 0 | 17 | 0 | 0 | 0 | 0 | 28 |
| 07:30 AM | 0 | 7 | 2 | 9 | 5 | 0 | 3 | 8 | 7 | 8 | 0 | 15 | 0 | 0 | 0 | 0 | 32 |
| 07:45 AM | 0 | 6 | 5 | 11 | 3 | 0 | 5 | 8 | 6 | 8 | 0 | 14 | 0 | 0 | 0 | 0 | 33 |
| Total | 0 | 21 | 11 | 32 | 15 | 0 | 12 | 27 | 26 | 29 | 0 | 55 | 0 | 0 | 0 | 0 | 114 |
| 08:00 AM | 0 | 4 | 2 | 6 | 0 | 1 | 4 | 5 | 4 | 10 | 0 | 14 | 0 | 0 | 0 | 0 | 25 |
| 08:15 AM | 0 | 5 | 6 | 11 | 2 | 0 | 2 | 4 | 4 | 6 | 0 | 10 | 0 | 0 | 0 | 0 | 25 |
| 08:30 AM | 0 | 6 | 5 | 11 | 1 | 0 | 3 | 4 | 4 | 8 | 0 | 12 | 0 | 0 | 0 | 0 | 27 |
| 08:45 AM | 0 | 11 | 2 | 13 | 3 | 0 | 8 | 11 | 5 | 13 | 0 | 18 | 0 | 0 | 0 | 0 | 42 |
| Total | 0 | 26 | 15 | 41 | 6 | 1 | 17 | 24 | 17 | 37 | 0 | 54 | 0 | 0 | 0 | 0 | 119 |
| Grand Total | 0 | 47 | 26 | 73 | 21 | 1 | 29 | 51 | 43 | 66 | 0 | 109 | 0 | 0 | 0 | 0 | 233 |
| Apprch % | 0 | 64.4 | 35.6 | | 41.2 | 2 | 56.9 | | 39.4 | 60.6 | 0 | | 0 | 0 | 0 | | |
| Total % | 0 | 20.2 | 11.2 | 31.3 | 9 | 0.4 | 12.4 | 21.9 | 18.5 | 28.3 | 0 | 46.8 | 0 | 0 | 0 | 0 | |

| | Cedar Avenue Southbound | | | | I-10 Westbound Off Ramp Westbound | | | | Cedar Avenue Northbound | | | | I-10 Westbound On Ramp Eastbound | | | | |
|---|---|---|---|---|---|---|---|---|---|---|---|---|---|---|---|---|---|
| Start Time | Left | Thru | Right | App. Total | Left | Thru | Right | App. Total | Left | Thru | Right | App. Total | Left | Thru | Right | App. Total | Int. Total |
| Peak Hour Analysis From 07:00 AM to 07:45 AM - Peak 1 of 1 | | | | | | | | | | | | | | | | | |
| Peak Hour for Entire Intersection Begins at 07:00 AM | | | | | | | | | | | | | | | | | |
| 07:00 AM | 0 | 4 | 2 | 6 | 4 | 0 | 2 | 6 | 4 | 5 | 0 | 9 | 0 | 0 | 0 | 0 | 21 |
| 07:15 AM | 0 | 4 | 2 | 6 | 3 | 0 | 2 | 5 | **9** | **8** | 0 | **17** | 0 | 0 | 0 | 0 | 28 |
| 07:30 AM | 0 | **7** | 2 | 9 | **5** | 0 | 3 | **8** | 7 | 8 | 0 | 15 | 0 | 0 | 0 | 0 | 32 |
| 07:45 AM | 0 | 6 | **5** | **11** | 3 | 0 | **5** | 8 | 6 | 8 | 0 | 14 | 0 | 0 | 0 | 0 | **33** |
| Total Volume | 0 | 21 | 11 | 32 | 15 | 0 | 12 | 27 | 26 | 29 | 0 | 55 | 0 | 0 | 0 | 0 | 114 |
| % App. Total | 0 | 65.6 | 34.4 | | 55.6 | 0 | 44.4 | | 47.3 | 52.7 | 0 | | 0 | 0 | 0 | | |
| PHF | .000 | .750 | .550 | .727 | .750 | .000 | .600 | .844 | .722 | .906 | .000 | .809 | .000 | .000 | .000 | .000 | .864 |

Counts Unlimited, Inc.
PO Box 1178
Corona, CA 92878
(951) 268-6268

County of San Bernardino
N/S: Cedar Avenue
E/W: I-10 Westbound On/Off Ramps
Weather: Clear

File Name : CSBCE10WAM
Site Code : 06714097
Start Date : 3/11/2014
Page No : 2

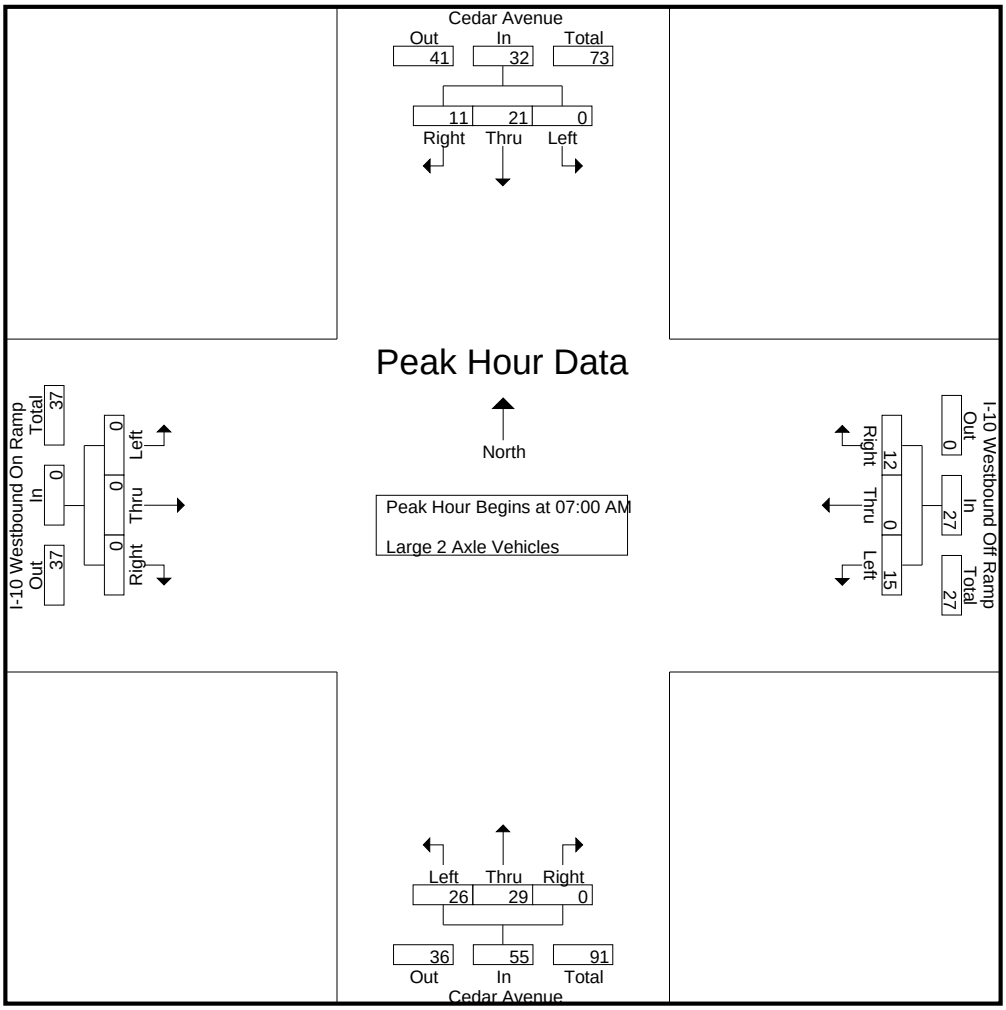


Peak Hour Analysis From 07:00 AM to 07:45 AM - Peak 1 of 1

Peak Hour for Each Approach Begins at:

| | 07:00 AM | | | | 07:00 AM | | | | 07:00 AM | | | | 07:00 AM | | | |
|---|---|---|---|---|---|---|---|---|---|---|---|---|---|---|---|---|
| +0 mins. | 0 | 4 | 2 | 6 | 4 | 0 | 2 | 6 | 4 | 5 | 0 | 9 | 0 | 0 | 0 | 0 |
| +15 mins. | 0 | 4 | 2 | 6 | 3 | 0 | 2 | 5 | **9** | **8** | 0 | **17** | 0 | 0 | 0 | 0 |
| +30 mins. | 0 | **7** | 2 | 9 | **5** | 0 | 3 | **8** | 7 | 8 | 0 | 15 | 0 | 0 | 0 | 0 |
| +45 mins. | 0 | 6 | **5** | **11** | 3 | 0 | **5** | 8 | 6 | 8 | 0 | 14 | 0 | 0 | 0 | 0 |
| Total Volume | 0 | 21 | 11 | 32 | 15 | 0 | 12 | 27 | 26 | 29 | 0 | 55 | 0 | 0 | 0 | 0 |
| % App. Total | 0 | 65.6 | 34.4 | | 55.6 | 0 | 44.4 | | 47.3 | 52.7 | 0 | | 0 | 0 | 0 | |
| PHF | .000 | .750 | .550 | .727 | .750 | .000 | .600 | .844 | .722 | .906 | .000 | .809 | .000 | .000 | .000 | .000 |

Counts Unlimited, Inc.
PO Box 1178
Corona, CA 92878
(951) 268-6268

County of San Bernardino
N/S: Cedar Avenue
E/W: I-10 Westbound On/Off Ramps
Weather: Clear

File Name : CSBCE10WAM
Site Code : 06714097
Start Date : 3/11/2014
Page No : 1

Groups Printed- 3 Axle Vehicles

| | Cedar Avenue Southbound | | | | I-10 Westbound Off Ramp Westbound | | | | Cedar Avenue Northbound | | | | I-10 Westbound On Ramp Eastbound | | | | |
|---|---|---|---|---|---|---|---|---|---|---|---|---|---|---|---|---|---|
| Start Time | Left | Thru | Right | App. Total | Left | Thru | Right | App. Total | Left | Thru | Right | App. Total | Left | Thru | Right | App. Total | Int. Total |
| 07:00 AM | 0 | 1 | 0 | 1 | 0 | 0 | 0 | 0 | 2 | 5 | 0 | 7 | 0 | 0 | 0 | 0 | 8 |
| 07:15 AM | 0 | 1 | 0 | 1 | 1 | 0 | 0 | 1 | 0 | 3 | 0 | 3 | 0 | 0 | 0 | 0 | 5 |
| 07:30 AM | 0 | 1 | 0 | 1 | 2 | 0 | 0 | 2 | 1 | 1 | 0 | 2 | 0 | 0 | 0 | 0 | 5 |
| 07:45 AM | 0 | 1 | 1 | 2 | 1 | 0 | 0 | 1 | 1 | 1 | 0 | 2 | 0 | 0 | 0 | 0 | 5 |
| Total | 0 | 4 | 1 | 5 | 4 | 0 | 0 | 4 | 4 | 10 | 0 | 14 | 0 | 0 | 0 | 0 | 23 |
| 08:00 AM | 0 | 3 | 0 | 3 | 0 | 0 | 0 | 0 | 2 | 5 | 0 | 7 | 0 | 0 | 0 | 0 | 10 |
| 08:15 AM | 0 | 0 | 1 | 1 | 1 | 0 | 0 | 1 | 1 | 2 | 0 | 3 | 0 | 0 | 0 | 0 | 5 |
| 08:30 AM | 0 | 1 | 2 | 3 | 1 | 0 | 0 | 1 | 2 | 1 | 0 | 3 | 0 | 0 | 0 | 0 | 7 |
| 08:45 AM | 0 | 0 | 0 | 0 | 0 | 0 | 1 | 1 | 1 | 1 | 0 | 2 | 0 | 0 | 0 | 0 | 3 |
| Total | 0 | 4 | 3 | 7 | 2 | 0 | 1 | 3 | 6 | 9 | 0 | 15 | 0 | 0 | 0 | 0 | 25 |
| Grand Total | 0 | 8 | 4 | 12 | 6 | 0 | 1 | 7 | 10 | 19 | 0 | 29 | 0 | 0 | 0 | 0 | 48 |
| Apprch % | 0 | 66.7 | 33.3 | | 85.7 | 0 | 14.3 | | 34.5 | 65.5 | 0 | | 0 | 0 | 0 | | |
| Total % | 0 | 16.7 | 8.3 | 25 | 12.5 | 0 | 2.1 | 14.6 | 20.8 | 39.6 | 0 | 60.4 | 0 | 0 | 0 | 0 | |

| | Cedar Avenue Southbound | | | | I-10 Westbound Off Ramp Westbound | | | | Cedar Avenue Northbound | | | | I-10 Westbound On Ramp Eastbound | | | | |
|---|---|---|---|---|---|---|---|---|---|---|---|---|---|---|---|---|---|
| Start Time | Left | Thru | Right | App. Total | Left | Thru | Right | App. Total | Left | Thru | Right | App. Total | Left | Thru | Right | App. Total | Int. Total |
| Peak Hour Analysis From 07:00 AM to 07:45 AM - Peak 1 of 1 | | | | | | | | | | | | | | | | | |
| Peak Hour for Entire Intersection Begins at 07:00 AM | | | | | | | | | | | | | | | | | |
| 07:00 AM | 0 | **1** | 0 | 1 | 0 | 0 | 0 | 0 | **2** | **5** | 0 | **7** | 0 | 0 | 0 | 0 | **8** |
| 07:15 AM | 0 | 1 | 0 | 1 | 1 | 0 | 0 | 1 | 0 | 3 | 0 | 3 | 0 | 0 | 0 | 0 | 5 |
| 07:30 AM | 0 | 1 | 0 | 1 | **2** | 0 | 0 | **2** | 1 | 1 | 0 | 2 | 0 | 0 | 0 | 0 | 5 |
| 07:45 AM | 0 | 1 | **1** | **2** | 1 | 0 | 0 | 1 | 1 | 1 | 0 | 2 | 0 | 0 | 0 | 0 | 5 |
| Total Volume | 0 | 4 | 1 | 5 | 4 | 0 | 0 | 4 | 4 | 10 | 0 | 14 | 0 | 0 | 0 | 0 | 23 |
| % App. Total | 0 | 80 | 20 | | 100 | 0 | 0 | | 28.6 | 71.4 | 0 | | 0 | 0 | 0 | | |
| PHF | .000 | 1.00 | .250 | .625 | .500 | .000 | .000 | .500 | .500 | .500 | .000 | .500 | .000 | .000 | .000 | .000 | .719 |

Counts Unlimited, Inc.
PO Box 1178
Corona, CA 92878
(951) 268-6268

County of San Bernardino
N/S: Cedar Avenue
E/W: I-10 Westbound On/Off Ramps
Weather: Clear

File Name : CSBCE10WAM
Site Code : 06714097
Start Date : 3/11/2014
Page No : 2

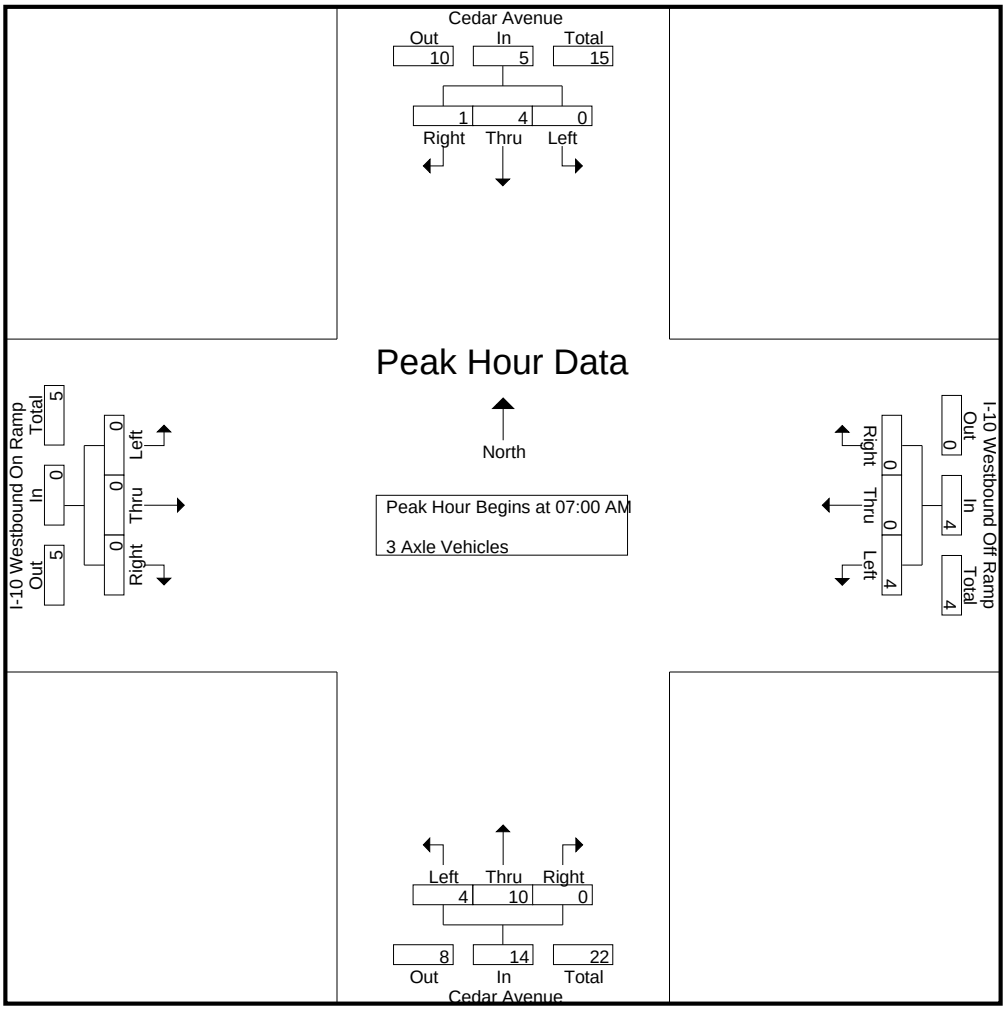


Peak Hour Analysis From 07:00 AM to 07:45 AM - Peak 1 of 1

Peak Hour for Each Approach Begins at:

| | 07:00 AM | | | | 07:00 AM | | | | 07:00 AM | | | | 07:00 AM | | | |
|---|---|---|---|---|---|---|---|---|---|---|---|---|---|---|---|---|
| +0 mins. | 0 | **1** | 0 | 1 | 0 | 0 | 0 | 0 | **2** | **5** | 0 | **7** | 0 | 0 | 0 | 0 |
| +15 mins. | 0 | 1 | 0 | 1 | 1 | 0 | 0 | 1 | 0 | 3 | 0 | 3 | 0 | 0 | 0 | 0 |
| +30 mins. | 0 | 1 | 0 | 1 | **2** | 0 | 0 | **2** | 1 | 1 | 0 | 2 | 0 | 0 | 0 | 0 |
| +45 mins. | 0 | 1 | **1** | **2** | 1 | 0 | 0 | 1 | 1 | 1 | 0 | 2 | 0 | 0 | 0 | 0 |
| Total Volume | 0 | 4 | 1 | 5 | 4 | 0 | 0 | 4 | 4 | 10 | 0 | 14 | 0 | 0 | 0 | 0 |
| % App. Total | 0 | 80 | 20 | | 100 | 0 | 0 | | 28.6 | 71.4 | 0 | | 0 | 0 | 0 | |
| PHF | .000 | 1.000 | .250 | .625 | .500 | .000 | .000 | .500 | .500 | .500 | .000 | .500 | .000 | .000 | .000 | .000 |

Counts Unlimited, Inc.
PO Box 1178
Corona, CA 92878
(951) 268-6268

County of San Bernardino
N/S: Cedar Avenue
E/W: I-10 Westbound On/Off Ramps
Weather: Clear

File Name : CSBCE10WAM
Site Code : 06714097
Start Date : 3/11/2014
Page No : 1

Groups Printed- 4+ Axle Trucks

| | Cedar Avenue Southbound | | | | I-10 Westbound Off Ramp Westbound | | | | Cedar Avenue Northbound | | | | I-10 Westbound On Ramp Eastbound | | | | |
|---|---|---|---|---|---|---|---|---|---|---|---|---|---|---|---|---|---|
| Start Time | Left | Thru | Right | App. Total | Left | Thru | Right | App. Total | Left | Thru | Right | App. Total | Left | Thru | Right | App. Total | Int. Total |
| 07:00 AM | 0 | 2 | 4 | 6 | 1 | 0 | 1 | 2 | 4 | 7 | 0 | 11 | 0 | 0 | 0 | 0 | 19 |
| 07:15 AM | 0 | 3 | 5 | 8 | 1 | 0 | 1 | 2 | 4 | 5 | 0 | 9 | 0 | 0 | 0 | 0 | 19 |
| 07:30 AM | 0 | 4 | 3 | 7 | 2 | 0 | 0 | 2 | 4 | 2 | 0 | 6 | 0 | 0 | 0 | 0 | 15 |
| 07:45 AM | 0 | 3 | 5 | 8 | 4 | 0 | 2 | 6 | 1 | 2 | 0 | 3 | 0 | 0 | 0 | 0 | 17 |
| Total | 0 | 12 | 17 | 29 | 8 | 0 | 4 | 12 | 13 | 16 | 0 | 29 | 0 | 0 | 0 | 0 | 70 |
| | | | | | | | | | | | | | | | | | |
| 08:00 AM | 0 | 2 | 8 | 10 | 1 | 0 | 5 | 6 | 3 | 5 | 0 | 8 | 0 | 0 | 0 | 0 | 24 |
| 08:15 AM | 0 | 1 | 8 | 9 | 2 | 0 | 2 | 4 | 0 | 1 | 0 | 1 | 0 | 0 | 0 | 0 | 14 |
| 08:30 AM | 0 | 4 | 2 | 6 | 1 | 0 | 0 | 1 | 3 | 5 | 0 | 8 | 0 | 0 | 0 | 0 | 15 |
| 08:45 AM | 0 | 2 | 4 | 6 | 0 | 0 | 0 | 0 | 9 | 5 | 0 | 14 | 0 | 0 | 0 | 0 | 20 |
| Total | 0 | 9 | 22 | 31 | 4 | 0 | 7 | 11 | 15 | 16 | 0 | 31 | 0 | 0 | 0 | 0 | 73 |
| | | | | | | | | | | | | | | | | | |
| Grand Total | 0 | 21 | 39 | 60 | 12 | 0 | 11 | 23 | 28 | 32 | 0 | 60 | 0 | 0 | 0 | 0 | 143 |
| Apprch % | 0 | 35 | 65 | | 52.2 | 0 | 47.8 | | 46.7 | 53.3 | 0 | | 0 | 0 | 0 | | |
| Total % | 0 | 14.7 | 27.3 | 42 | 8.4 | 0 | 7.7 | 16.1 | 19.6 | 22.4 | 0 | 42 | 0 | 0 | 0 | 0 | |

| | Cedar Avenue Southbound | | | | I-10 Westbound Off Ramp Westbound | | | | Cedar Avenue Northbound | | | | I-10 Westbound On Ramp Eastbound | | | | |
|---|---|---|---|---|---|---|---|---|---|---|---|---|---|---|---|---|---|
| Start Time | Left | Thru | Right | App. Total | Left | Thru | Right | App. Total | Left | Thru | Right | App. Total | Left | Thru | Right | App. Total | Int. Total |
| Peak Hour Analysis From 07:00 AM to 07:45 AM - Peak 1 of 1 | | | | | | | | | | | | | | | | | |
| Peak Hour for Entire Intersection Begins at 07:00 AM | | | | | | | | | | | | | | | | | |
| 07:00 AM | 0 | 2 | 4 | 6 | 1 | 0 | 1 | 2 | **4** | **7** | 0 | **11** | 0 | 0 | 0 | 0 | **19** |
| 07:15 AM | 0 | 3 | **5** | **8** | 1 | 0 | 1 | 2 | 4 | 5 | 0 | 9 | 0 | 0 | 0 | 0 | 19 |
| 07:30 AM | 0 | **4** | 3 | 7 | 2 | 0 | 0 | 2 | 4 | 2 | 0 | 6 | 0 | 0 | 0 | 0 | 15 |
| 07:45 AM | 0 | 3 | 5 | 8 | **4** | 0 | **2** | **6** | 1 | 2 | 0 | 3 | 0 | 0 | 0 | 0 | 17 |
| Total Volume | 0 | 12 | 17 | 29 | 8 | 0 | 4 | 12 | 13 | 16 | 0 | 29 | 0 | 0 | 0 | 0 | 70 |
| % App. Total | 0 | 41.4 | 58.6 | | 66.7 | 0 | 33.3 | | 44.8 | 55.2 | 0 | | 0 | 0 | 0 | | |
| PHF | .000 | .750 | .850 | .906 | .500 | .000 | .500 | .500 | .813 | .571 | .000 | .659 | .000 | .000 | .000 | .000 | .921 |

Counts Unlimited, Inc.
PO Box 1178
Corona, CA 92878
(951) 268-6268

County of San Bernardino
N/S: Cedar Avenue
E/W: I-10 Westbound On/Off Ramps
Weather: Clear

File Name : CSBCE10WAM
Site Code : 06714097
Start Date : 3/11/2014
Page No : 2

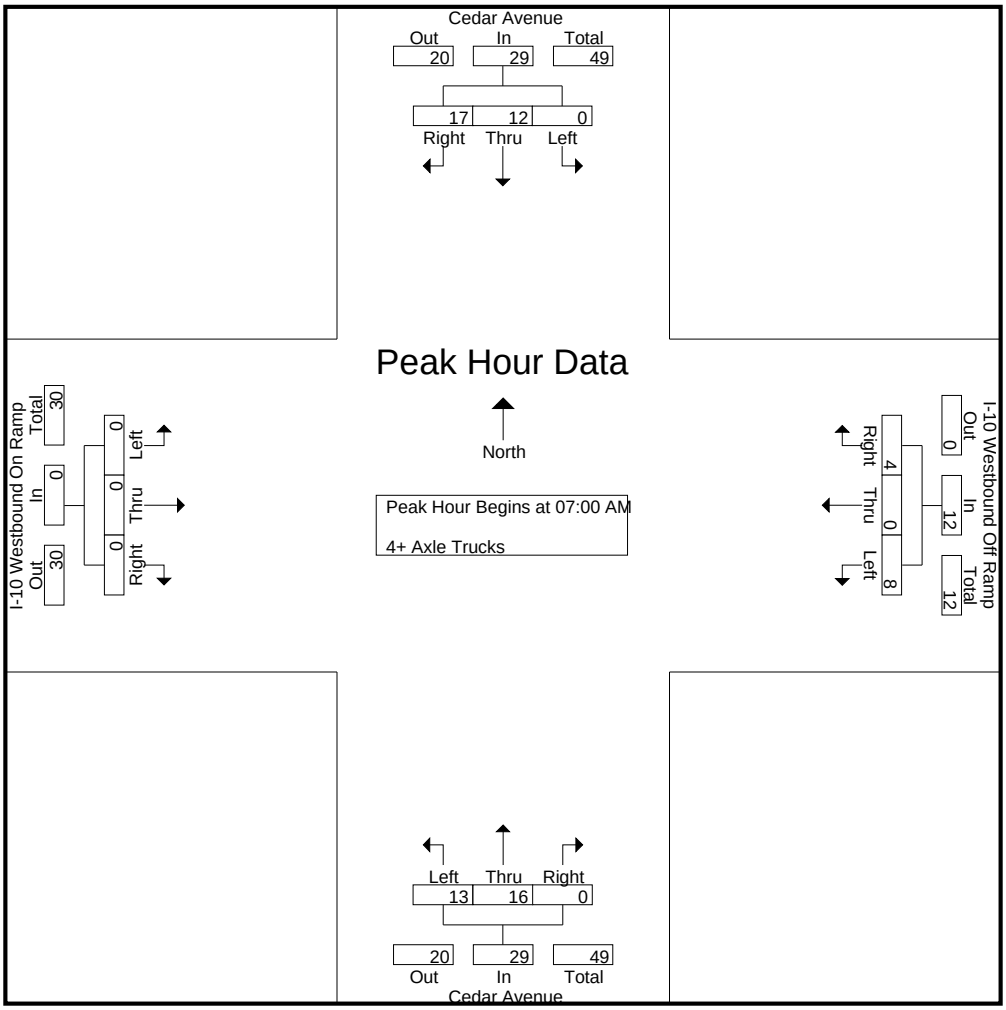


Peak Hour Analysis From 07:00 AM to 07:45 AM - Peak 1 of 1

Peak Hour for Each Approach Begins at:

| | 07:00 AM | | | | 07:00 AM | | | | 07:00 AM | | | | 07:00 AM | | | |
|---|---|---|---|---|---|---|---|---|---|---|---|---|---|---|---|---|
| +0 mins. | 0 | 2 | 4 | 6 | 1 | 0 | 1 | 2 | **4** | **7** | 0 | **11** | 0 | 0 | 0 | 0 |
| +15 mins. | 0 | 3 | **5** | **8** | 1 | 0 | 1 | 2 | 4 | 5 | 0 | 9 | 0 | 0 | 0 | 0 |
| +30 mins. | 0 | **4** | 3 | 7 | 2 | 0 | 0 | 2 | 4 | 2 | 0 | 6 | 0 | 0 | 0 | 0 |
| +45 mins. | 0 | 3 | 5 | 8 | **4** | 0 | **2** | **6** | 1 | 2 | 0 | 3 | 0 | 0 | 0 | 0 |
| Total Volume | 0 | 12 | 17 | 29 | 8 | 0 | 4 | 12 | 13 | 16 | 0 | 29 | 0 | 0 | 0 | 0 |
| % App. Total | 0 | 41.4 | 58.6 | | 66.7 | 0 | 33.3 | | 44.8 | 55.2 | 0 | | 0 | 0 | 0 | |
| PHF | .000 | .750 | .850 | .906 | .500 | .000 | .500 | .500 | .813 | .571 | .000 | .659 | .000 | .000 | .000 | .000 |

Counts Unlimited, Inc.
PO Box 1178
Corona, CA 92878
(951) 268-6268

County of San Bernardino
N/S: Cedar Avenue
E/W: I-10 Westbound On/Off Ramps
Weather: Clear

File Name : CSBCE10WPM
Site Code : 06714097
Start Date : 3/11/2014
Page No : 1

Groups Printed- Passenger Vehicles - Large 2 Axle Vehicles - 3 Axle Vehicles - 4+ Axle Trucks

| | Cedar Avenue Southbound | | | | I-10 Westbound Off Ramp Westbound | | | | Cedar Avenue Northbound | | | | I-10 Westbound On Ramp Eastbound | | | | |
|---|---|---|---|---|---|---|---|---|---|---|---|---|---|---|---|---|---|
| Start Time | Left | Thru | Right | App. Total | Left | Thru | Right | App. Total | Left | Thru | Right | App. Total | Left | Thru | Right | App. Total | Int. Total |
| 04:00 PM | 0 | 267 | 123 | 390 | 70 | 1 | 121 | 192 | 54 | 309 | 0 | 363 | 0 | 0 | 0 | 0 | 945 |
| 04:15 PM | 0 | 240 | 137 | 377 | 58 | 1 | 133 | 192 | 68 | 324 | 0 | 392 | 0 | 0 | 0 | 0 | 961 |
| 04:30 PM | 0 | 254 | 130 | 384 | 48 | 0 | 104 | 152 | 52 | 332 | 0 | 384 | 0 | 0 | 0 | 0 | 920 |
| 04:45 PM | 0 | 266 | 112 | 378 | 66 | 0 | 120 | 186 | 48 | 326 | 0 | 374 | 0 | 0 | 0 | 0 | 938 |
| Total | 0 | 1027 | 502 | 1529 | 242 | 2 | 478 | 722 | 222 | 1291 | 0 | 1513 | 0 | 0 | 0 | 0 | 3764 |
| 05:00 PM | 0 | 269 | 106 | 375 | 77 | 3 | 112 | 192 | 53 | 307 | 0 | 360 | 0 | 0 | 0 | 0 | 927 |
| 05:15 PM | 0 | 287 | 118 | 405 | 81 | 0 | 102 | 183 | 69 | 353 | 0 | 422 | 0 | 0 | 0 | 0 | 1010 |
| 05:30 PM | 0 | 253 | 83 | 336 | 86 | 0 | 142 | 228 | 44 | 326 | 0 | 370 | 0 | 0 | 0 | 0 | 934 |
| 05:45 PM | 0 | 246 | 125 | 371 | 85 | 1 | 134 | 220 | 31 | 313 | 0 | 344 | 0 | 0 | 0 | 0 | 935 |
| Total | 0 | 1055 | 432 | 1487 | 329 | 4 | 490 | 823 | 197 | 1299 | 0 | 1496 | 0 | 0 | 0 | 0 | 3806 |
| Grand Total | 0 | 2082 | 934 | 3016 | 571 | 6 | 968 | 1545 | 419 | 2590 | 0 | 3009 | 0 | 0 | 0 | 0 | 7570 |
| Apprch % | 0 | 69 | 31 | | 37 | 0.4 | 62.7 | | 13.9 | 86.1 | 0 | | 0 | 0 | 0 | | |
| Total % | 0 | 27.5 | 12.3 | 39.8 | 7.5 | 0.1 | 12.8 | 20.4 | 5.5 | 34.2 | 0 | 39.7 | 0 | 0 | 0 | 0 | |
| Passenger Vehicles | 0 | 2016 | 885 | 2901 | 543 | 3 | 934 | 1480 | 377 | 2517 | 0 | 2894 | 0 | 0 | 0 | 0 | 7275 |
| % Passenger Vehicles | 0 | 96.8 | 94.8 | 96.2 | 95.1 | 50 | 96.5 | 95.8 | 90 | 97.2 | 0 | 96.2 | 0 | 0 | 0 | 0 | 96.1 |
| Large 2 Axle Vehicles | 0 | 29 | 19 | 48 | 8 | 3 | 14 | 25 | 20 | 35 | 0 | 55 | 0 | 0 | 0 | 0 | 128 |
| % Large 2 Axle Vehicles | 0 | 1.4 | 2 | 1.6 | 1.4 | 50 | 1.4 | 1.6 | 4.8 | 1.4 | 0 | 1.8 | 0 | 0 | 0 | 0 | 1.7 |
| 3 Axle Vehicles | 0 | 23 | 6 | 29 | 2 | 0 | 3 | 5 | 8 | 15 | 0 | 23 | 0 | 0 | 0 | 0 | 57 |
| % 3 Axle Vehicles | 0 | 1.1 | 0.6 | 1 | 0.4 | 0 | 0.3 | 0.3 | 1.9 | 0.6 | 0 | 0.8 | 0 | 0 | 0 | 0 | 0.8 |
| 4+ Axle Trucks | 0 | 14 | 24 | 38 | 18 | 0 | 17 | 35 | 14 | 23 | 0 | 37 | 0 | 0 | 0 | 0 | 110 |
| % 4+ Axle Trucks | 0 | 0.7 | 2.6 | 1.3 | 3.2 | 0 | 1.8 | 2.3 | 3.3 | 0.9 | 0 | 1.2 | 0 | 0 | 0 | 0 | 1.5 |

| | Cedar Avenue Southbound | | | | I-10 Westbound Off Ramp Westbound | | | | Cedar Avenue Northbound | | | | I-10 Westbound On Ramp Eastbound | | | | |
|---|---|---|---|---|---|---|---|---|---|---|---|---|---|---|---|---|---|
| Start Time | Left | Thru | Right | App. Total | Left | Thru | Right | App. Total | Left | Thru | Right | App. Total | Left | Thru | Right | App. Total | Int. Total |
| Peak Hour Analysis From 04:00 PM to 05:45 PM - Peak 1 of 1 | | | | | | | | | | | | | | | | | |
| Peak Hour for Entire Intersection Begins at 04:45 PM | | | | | | | | | | | | | | | | | |
| 04:45 PM | 0 | 266 | 112 | 378 | 66 | 0 | 120 | 186 | 48 | 326 | 0 | 374 | 0 | 0 | 0 | 0 | 938 |
| 05:00 PM | 0 | 269 | 106 | 375 | 77 | **3** | 112 | 192 | 53 | 307 | 0 | 360 | 0 | 0 | 0 | 0 | 927 |
| 05:15 PM | 0 | **287** | **118** | **405** | 81 | 0 | 102 | 183 | **69** | **353** | 0 | **422** | 0 | 0 | 0 | 0 | **1010** |
| 05:30 PM | 0 | 253 | 83 | 336 | **86** | 0 | **142** | **228** | 44 | 326 | 0 | 370 | 0 | 0 | 0 | 0 | 934 |
| Total Volume | 0 | 1075 | 419 | 1494 | 310 | 3 | 476 | 789 | 214 | 1312 | 0 | 1526 | 0 | 0 | 0 | 0 | 3809 |
| % App. Total | 0 | 72 | 28 | | 39.3 | 0.4 | 60.3 | | 14 | 86 | 0 | | 0 | 0 | 0 | | |
| PHF | .000 | .936 | .888 | .922 | .901 | .250 | .838 | .865 | .775 | .929 | .000 | .904 | .000 | .000 | .000 | .000 | .943 |

Counts Unlimited, Inc.
PO Box 1178
Corona, CA 92878
(951) 268-6268

County of San Bernardino
N/S: Cedar Avenue
E/W: I-10 Westbound On/Off Ramps
Weather: Clear

File Name : CSBCE10WPM
Site Code : 06714097
Start Date : 3/11/2014
Page No : 2

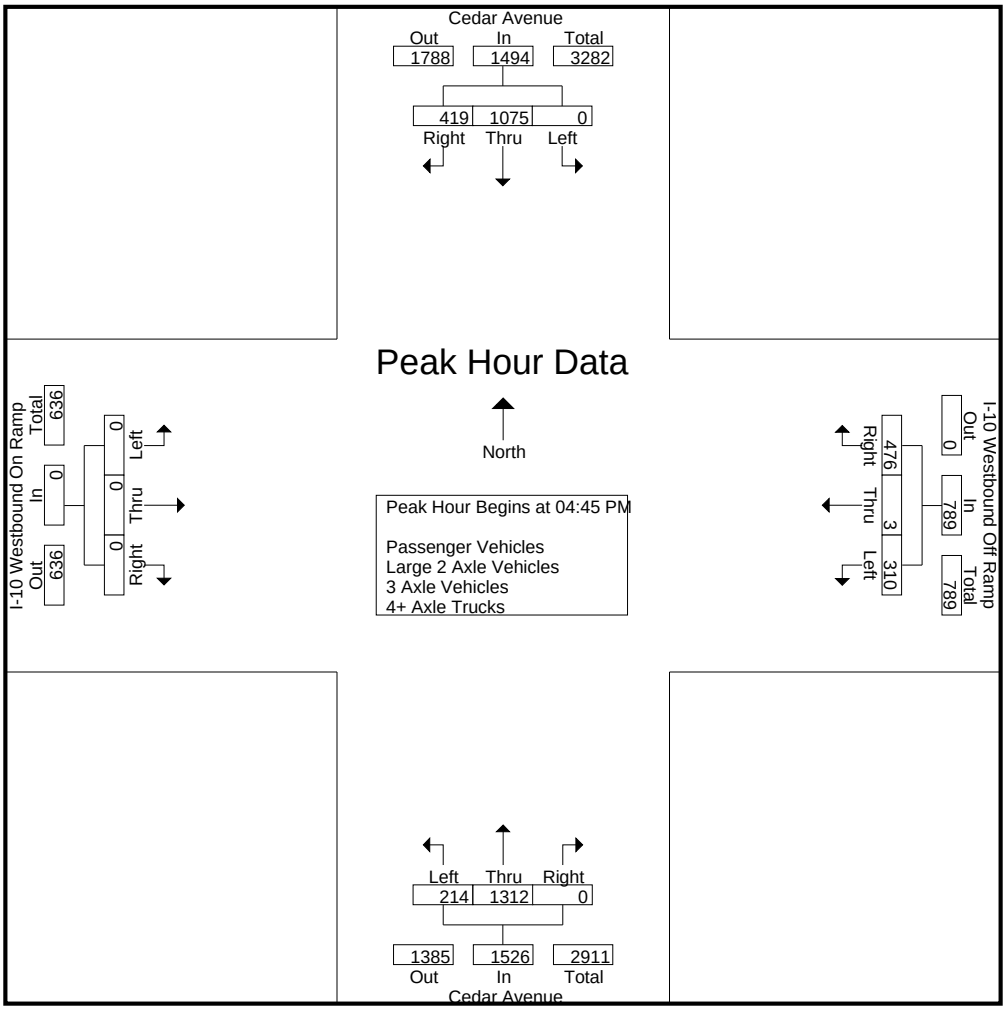


Peak Hour Analysis From 04:00 PM to 05:45 PM - Peak 1 of 1

Peak Hour for Each Approach Begins at:

| | 04:30 PM | | | | 05:00 PM | | | | 04:30 PM | | | | 04:00 PM | | | |
|---|---|---|---|---|---|---|---|---|---|---|---|---|---|---|---|---|
| +0 mins. | 0 | 254 | **130** | 384 | 77 | **3** | 112 | 192 | 52 | 332 | 0 | 384 | 0 | 0 | 0 | 0 |
| +15 mins. | 0 | 266 | 112 | 378 | 81 | 0 | 102 | 183 | 48 | 326 | 0 | 374 | 0 | 0 | 0 | 0 |
| +30 mins. | 0 | 269 | 106 | 375 | **86** | 0 | **142** | **228** | 53 | 307 | 0 | 360 | 0 | 0 | 0 | 0 |
| +45 mins. | 0 | **287** | 118 | **405** | 85 | 1 | 134 | 220 | **69** | **353** | 0 | **422** | 0 | 0 | 0 | 0 |
| Total Volume | 0 | 1076 | 466 | 1542 | 329 | 4 | 490 | 823 | 222 | 1318 | 0 | 1540 | 0 | 0 | 0 | 0 |
| % App. Total | 0 | 69.8 | 30.2 | | 40 | 0.5 | 59.5 | | 14.4 | 85.6 | 0 | | 0 | 0 | 0 | |
| PHF | .000 | .937 | .896 | .952 | .956 | .333 | .863 | .902 | .804 | .933 | .000 | .912 | .000 | .000 | .000 | .000 |

Counts Unlimited, Inc.
PO Box 1178
Corona, CA 92878
(951) 268-6268

County of San Bernardino
N/S: Cedar Avenue
E/W: I-10 Westbound On/Off Ramps
Weather: Clear

File Name : CSBCE10WPM
Site Code : 06714097
Start Date : 3/11/2014
Page No : 1

Groups Printed- Passenger Vehicles

| | Cedar Avenue Southbound | | | | I-10 Westbound Off Ramp Westbound | | | | Cedar Avenue Northbound | | | | I-10 Westbound On Ramp Eastbound | | | | |
|---|---|---|---|---|---|---|---|---|---|---|---|---|---|---|---|---|---|
| Start Time | Left | Thru | Right | App. Total | Left | Thru | Right | App. Total | Left | Thru | Right | App. Total | Left | Thru | Right | App. Total | Int. Total |
| 04:00 PM | 0 | 257 | 113 | 370 | 67 | 1 | 117 | 185 | 44 | 302 | 0 | 346 | 0 | 0 | 0 | 0 | 901 |
| 04:15 PM | 0 | 233 | 130 | 363 | 55 | 0 | 126 | 181 | 61 | 310 | 0 | 371 | 0 | 0 | 0 | 0 | 915 |
| 04:30 PM | 0 | 243 | 124 | 367 | 43 | 0 | 98 | 141 | 48 | 325 | 0 | 373 | 0 | 0 | 0 | 0 | 881 |
| 04:45 PM | 0 | 259 | 106 | 365 | 62 | 0 | 116 | 178 | 47 | 316 | 0 | 363 | 0 | 0 | 0 | 0 | 906 |
| Total | 0 | 992 | 473 | 1465 | 227 | 1 | 457 | 685 | 200 | 1253 | 0 | 1453 | 0 | 0 | 0 | 0 | 3603 |
| | | | | | | | | | | | | | | | | | |
| 05:00 PM | 0 | 257 | 103 | 360 | 75 | 1 | 111 | 187 | 46 | 297 | 0 | 343 | 0 | 0 | 0 | 0 | 890 |
| 05:15 PM | 0 | 282 | 110 | 392 | 79 | 0 | 101 | 180 | 65 | 347 | 0 | 412 | 0 | 0 | 0 | 0 | 984 |
| 05:30 PM | 0 | 248 | 78 | 326 | 81 | 0 | 135 | 216 | 39 | 318 | 0 | 357 | 0 | 0 | 0 | 0 | 899 |
| 05:45 PM | 0 | 237 | 121 | 358 | 81 | 1 | 130 | 212 | 27 | 302 | 0 | 329 | 0 | 0 | 0 | 0 | 899 |
| Total | 0 | 1024 | 412 | 1436 | 316 | 2 | 477 | 795 | 177 | 1264 | 0 | 1441 | 0 | 0 | 0 | 0 | 3672 |
| | | | | | | | | | | | | | | | | | |
| Grand Total | 0 | 2016 | 885 | 2901 | 543 | 3 | 934 | 1480 | 377 | 2517 | 0 | 2894 | 0 | 0 | 0 | 0 | 7275 |
| Apprch % | 0 | 69.5 | 30.5 | | 36.7 | 0.2 | 63.1 | | 13 | 87 | 0 | | 0 | 0 | 0 | | |
| Total % | 0 | 27.7 | 12.2 | 39.9 | 7.5 | 0 | 12.8 | 20.3 | 5.2 | 34.6 | 0 | 39.8 | 0 | 0 | 0 | 0 | |

| | Cedar Avenue Southbound | | | | I-10 Westbound Off Ramp Westbound | | | | Cedar Avenue Northbound | | | | I-10 Westbound On Ramp Eastbound | | | | |
|---|---|---|---|---|---|---|---|---|---|---|---|---|---|---|---|---|---|
| Start Time | Left | Thru | Right | App. Total | Left | Thru | Right | App. Total | Left | Thru | Right | App. Total | Left | Thru | Right | App. Total | Int. Total |
| Peak Hour Analysis From 04:45 PM to 05:30 PM - Peak 1 of 1 | | | | | | | | | | | | | | | | | |
| Peak Hour for Entire Intersection Begins at 04:45 PM | | | | | | | | | | | | | | | | | |
| 04:45 PM | 0 | 259 | 106 | 365 | 62 | 0 | 116 | 178 | 47 | 316 | 0 | 363 | 0 | 0 | 0 | 0 | 906 |
| 05:00 PM | 0 | 257 | 103 | 360 | 75 | **1** | 111 | 187 | 46 | 297 | 0 | 343 | 0 | 0 | 0 | 0 | 890 |
| 05:15 PM | 0 | **282** | **110** | **392** | 79 | 0 | 101 | 180 | **65** | **347** | 0 | **412** | 0 | 0 | 0 | 0 | **984** |
| 05:30 PM | 0 | 248 | 78 | 326 | **81** | 0 | **135** | **216** | 39 | 318 | 0 | 357 | 0 | 0 | 0 | 0 | 899 |
| Total Volume | 0 | 1046 | 397 | 1443 | 297 | 1 | 463 | 761 | 197 | 1278 | 0 | 1475 | 0 | 0 | 0 | 0 | 3679 |
| % App. Total | 0 | 72.5 | 27.5 | | 39 | 0.1 | 60.8 | | 13.4 | 86.6 | 0 | | 0 | 0 | 0 | | |
| PHF | .000 | .927 | .902 | .920 | .917 | .250 | .857 | .881 | .758 | .921 | .000 | .895 | .000 | .000 | .000 | .000 | .935 |

Counts Unlimited, Inc.
PO Box 1178
Corona, CA 92878
(951) 268-6268

County of San Bernardino
N/S: Cedar Avenue
E/W: I-10 Westbound On/Off Ramps
Weather: Clear

File Name : CSBCE10WPM
Site Code : 06714097
Start Date : 3/11/2014
Page No : 2

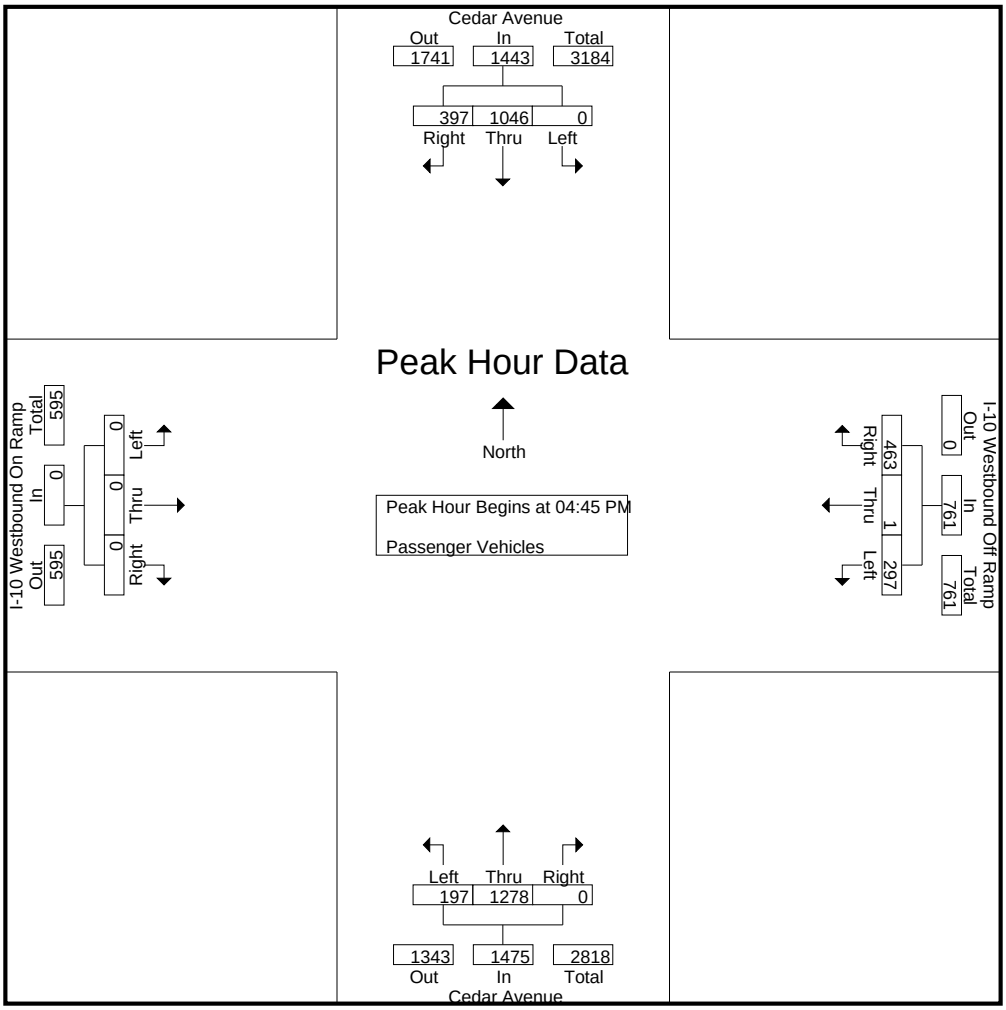


Peak Hour Analysis From 04:45 PM to 05:30 PM - Peak 1 of 1

Peak Hour for Each Approach Begins at:

| | 04:45 PM | | | | 04:45 PM | | | | 04:45 PM | | | | 04:45 PM | | | |
|---|---|---|---|---|---|---|---|---|---|---|---|---|---|---|---|---|
| +0 mins. | 0 | 259 | 106 | 365 | 62 | 0 | 116 | 178 | 47 | 316 | 0 | 363 | 0 | 0 | 0 | 0 |
| +15 mins. | 0 | 257 | 103 | 360 | 75 | **1** | 111 | 187 | 46 | 297 | 0 | 343 | 0 | 0 | 0 | 0 |
| +30 mins. | 0 | **282** | **110** | **392** | 79 | 0 | 101 | 180 | **65** | **347** | 0 | **412** | 0 | 0 | 0 | 0 |
| +45 mins. | 0 | 248 | 78 | 326 | **81** | 0 | **135** | **216** | 39 | 318 | 0 | 357 | 0 | 0 | 0 | 0 |
| Total Volume | 0 | 1046 | 397 | 1443 | 297 | 1 | 463 | 761 | 197 | 1278 | 0 | 1475 | 0 | 0 | 0 | 0 |
| % App. Total | 0 | 72.5 | 27.5 | | 39 | 0.1 | 60.8 | | 13.4 | 86.6 | 0 | | 0 | 0 | 0 | |
| PHF | .000 | .927 | .902 | .920 | .917 | .250 | .857 | .881 | .758 | .921 | .000 | .895 | .000 | .000 | .000 | .000 |

Counts Unlimited, Inc.
PO Box 1178
Corona, CA 92878
(951) 268-6268

County of San Bernardino
N/S: Cedar Avenue
E/W: I-10 Westbound On/Off Ramps
Weather: Clear

File Name : CSBCE10WPM
Site Code : 06714097
Start Date : 3/11/2014
Page No : 1

Groups Printed- Large 2 Axle Vehicles

| | Cedar Avenue Southbound | | | | I-10 Westbound Off Ramp Westbound | | | | Cedar Avenue Northbound | | | | I-10 Westbound On Ramp Eastbound | | | | |
|---|---|---|---|---|---|---|---|---|---|---|---|---|---|---|---|---|---|
| Start Time | Left | Thru | Right | App. Total | Left | Thru | Right | App. Total | Left | Thru | Right | App. Total | Left | Thru | Right | App. Total | Int. Total |
| 04:00 PM | 0 | 5 | 5 | 10 | 1 | 0 | 1 | 2 | 5 | 3 | 0 | 8 | 0 | 0 | 0 | 0 | 20 |
| 04:15 PM | 0 | 4 | 3 | 7 | 0 | 1 | 4 | 5 | 4 | 9 | 0 | 13 | 0 | 0 | 0 | 0 | 25 |
| 04:30 PM | 0 | 6 | 3 | 9 | 3 | 0 | 1 | 4 | 0 | 3 | 0 | 3 | 0 | 0 | 0 | 0 | 16 |
| 04:45 PM | 0 | 4 | 2 | 6 | 1 | 0 | 3 | 4 | 0 | 1 | 0 | 1 | 0 | 0 | 0 | 0 | 11 |
| Total | 0 | 19 | 13 | 32 | 5 | 1 | 9 | 15 | 9 | 16 | 0 | 25 | 0 | 0 | 0 | 0 | 72 |
| 05:00 PM | 0 | 1 | 1 | 2 | 0 | 2 | 1 | 3 | 4 | 6 | 0 | 10 | 0 | 0 | 0 | 0 | 15 |
| 05:15 PM | 0 | 2 | 2 | 4 | 0 | 0 | 0 | 0 | 1 | 6 | 0 | 7 | 0 | 0 | 0 | 0 | 11 |
| 05:30 PM | 0 | 3 | 2 | 5 | 2 | 0 | 1 | 3 | 3 | 3 | 0 | 6 | 0 | 0 | 0 | 0 | 14 |
| 05:45 PM | 0 | 4 | 1 | 5 | 1 | 0 | 3 | 4 | 3 | 4 | 0 | 7 | 0 | 0 | 0 | 0 | 16 |
| Total | 0 | 10 | 6 | 16 | 3 | 2 | 5 | 10 | 11 | 19 | 0 | 30 | 0 | 0 | 0 | 0 | 56 |
| Grand Total | 0 | 29 | 19 | 48 | 8 | 3 | 14 | 25 | 20 | 35 | 0 | 55 | 0 | 0 | 0 | 0 | 128 |
| Apprch % | 0 | 60.4 | 39.6 | | 32 | 12 | 56 | | 36.4 | 63.6 | 0 | | 0 | 0 | 0 | | |
| Total % | 0 | 22.7 | 14.8 | 37.5 | 6.2 | 2.3 | 10.9 | 19.5 | 15.6 | 27.3 | 0 | 43 | 0 | 0 | 0 | 0 | |

| | Cedar Avenue Southbound | | | | I-10 Westbound Off Ramp Westbound | | | | Cedar Avenue Northbound | | | | I-10 Westbound On Ramp Eastbound | | | | |
|---|---|---|---|---|---|---|---|---|---|---|---|---|---|---|---|---|---|
| Start Time | Left | Thru | Right | App. Total | Left | Thru | Right | App. Total | Left | Thru | Right | App. Total | Left | Thru | Right | App. Total | Int. Total |
| Peak Hour Analysis From 04:45 PM to 05:30 PM - Peak 1 of 1 | | | | | | | | | | | | | | | | | |
| Peak Hour for Entire Intersection Begins at 04:45 PM | | | | | | | | | | | | | | | | | |
| 04:45 PM | 0 | **4** | **2** | **6** | 1 | 0 | **3** | **4** | 0 | 1 | 0 | 1 | 0 | 0 | 0 | 0 | 11 |
| 05:00 PM | 0 | 1 | 1 | 2 | 0 | **2** | 1 | 3 | **4** | **6** | 0 | **10** | 0 | 0 | 0 | 0 | **15** |
| 05:15 PM | 0 | 2 | 2 | 4 | 0 | 0 | 0 | 0 | 1 | 6 | 0 | 7 | 0 | 0 | 0 | 0 | 11 |
| 05:30 PM | 0 | 3 | 2 | 5 | **2** | 0 | 1 | 3 | 3 | 3 | 0 | 6 | 0 | 0 | 0 | 0 | 14 |
| Total Volume | 0 | 10 | 7 | 17 | 3 | 2 | 5 | 10 | 8 | 16 | 0 | 24 | 0 | 0 | 0 | 0 | 51 |
| % App. Total | 0 | 58.8 | 41.2 | | 30 | 20 | 50 | | 33.3 | 66.7 | 0 | | 0 | 0 | 0 | | |
| PHF | .000 | .625 | .875 | .708 | .375 | .250 | .417 | .625 | .500 | .667 | .000 | .600 | .000 | .000 | .000 | .000 | .850 |

Counts Unlimited, Inc.
PO Box 1178
Corona, CA 92878
(951) 268-6268

County of San Bernardino
N/S: Cedar Avenue
E/W: I-10 Westbound On/Off Ramps
Weather: Clear

File Name : CSBCE10WPM
Site Code : 06714097
Start Date : 3/11/2014
Page No : 2

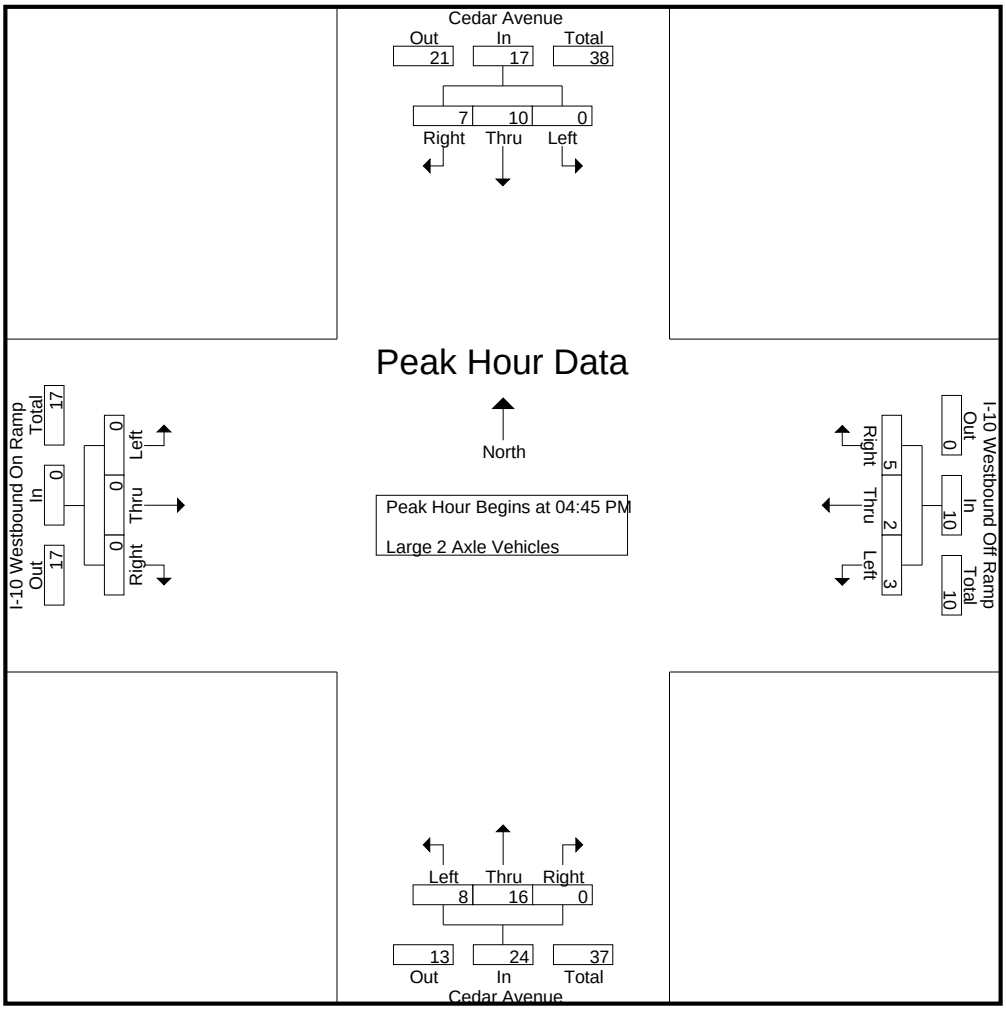


Peak Hour Analysis From 04:45 PM to 05:30 PM - Peak 1 of 1

Peak Hour for Each Approach Begins at:

| | 04:45 PM | | | | 04:45 PM | | | | 04:45 PM | | | | 04:45 PM | | | |
|---|---|---|---|---|---|---|---|---|---|---|---|---|---|---|---|---|
| +0 mins. | 0 | **4** | **2** | **6** | 1 | 0 | **3** | **4** | 0 | 1 | 0 | 1 | 0 | 0 | 0 | 0 |
| +15 mins. | 0 | 1 | 1 | 2 | 0 | **2** | 1 | 3 | **4** | **6** | 0 | **10** | 0 | 0 | 0 | 0 |
| +30 mins. | 0 | 2 | 2 | 4 | 0 | 0 | 0 | 0 | 1 | 6 | 0 | 7 | 0 | 0 | 0 | 0 |
| +45 mins. | 0 | 3 | 2 | 5 | **2** | 0 | 1 | 3 | 3 | 3 | 0 | 6 | 0 | 0 | 0 | 0 |
| Total Volume | 0 | 10 | 7 | 17 | 3 | 2 | 5 | 10 | 8 | 16 | 0 | 24 | 0 | 0 | 0 | 0 |
| % App. Total | 0 | 58.8 | 41.2 | | 30 | 20 | 50 | | 33.3 | 66.7 | 0 | | 0 | 0 | 0 | |
| PHF | .000 | .625 | .875 | .708 | .375 | .250 | .417 | .625 | .500 | .667 | .000 | .600 | .000 | .000 | .000 | .000 |

Counts Unlimited, Inc.
PO Box 1178
Corona, CA 92878
(951) 268-6268

County of San Bernardino
N/S: Cedar Avenue
E/W: I-10 Westbound On/Off Ramps
Weather: Clear

File Name : CSBCE10WPM
Site Code : 06714097
Start Date : 3/11/2014
Page No : 1

Groups Printed- 3 Axle Vehicles

| | Cedar Avenue Southbound | | | | I-10 Westbound Off Ramp Westbound | | | | Cedar Avenue Northbound | | | | I-10 Westbound On Ramp Eastbound | | | | |
|---|---|---|---|---|---|---|---|---|---|---|---|---|---|---|---|---|---|
| Start Time | Left | Thru | Right | App. Total | Left | Thru | Right | App. Total | Left | Thru | Right | App. Total | Left | Thru | Right | App. Total | Int. Total |
| 04:00 PM | 0 | 0 | 0 | 0 | 1 | 0 | 0 | 1 | 1 | 1 | 0 | 2 | 0 | 0 | 0 | 0 | 3 |
| 04:15 PM | 0 | 2 | 1 | 3 | 0 | 0 | 0 | 0 | 2 | 1 | 0 | 3 | 0 | 0 | 0 | 0 | 6 |
| 04:30 PM | 0 | 3 | 1 | 4 | 1 | 0 | 1 | 2 | 3 | 3 | 0 | 6 | 0 | 0 | 0 | 0 | 12 |
| 04:45 PM | 0 | 2 | 2 | 4 | 0 | 0 | 0 | 0 | 0 | 5 | 0 | 5 | 0 | 0 | 0 | 0 | 9 |
| Total | 0 | 7 | 4 | 11 | 2 | 0 | 1 | 3 | 6 | 10 | 0 | 16 | 0 | 0 | 0 | 0 | 30 |
| 05:00 PM | 0 | 8 | 0 | 8 | 0 | 0 | 0 | 0 | 0 | 1 | 0 | 1 | 0 | 0 | 0 | 0 | 9 |
| 05:15 PM | 0 | 2 | 0 | 2 | 0 | 0 | 0 | 0 | 1 | 0 | 0 | 1 | 0 | 0 | 0 | 0 | 3 |
| 05:30 PM | 0 | 2 | 1 | 3 | 0 | 0 | 2 | 2 | 0 | 3 | 0 | 3 | 0 | 0 | 0 | 0 | 8 |
| 05:45 PM | 0 | 4 | 1 | 5 | 0 | 0 | 0 | 0 | 1 | 1 | 0 | 2 | 0 | 0 | 0 | 0 | 7 |
| Total | 0 | 16 | 2 | 18 | 0 | 0 | 2 | 2 | 2 | 5 | 0 | 7 | 0 | 0 | 0 | 0 | 27 |
| Grand Total | 0 | 23 | 6 | 29 | 2 | 0 | 3 | 5 | 8 | 15 | 0 | 23 | 0 | 0 | 0 | 0 | 57 |
| Apprch % | 0 | 79.3 | 20.7 | | 40 | 0 | 60 | | 34.8 | 65.2 | 0 | | 0 | 0 | 0 | | |
| Total % | 0 | 40.4 | 10.5 | 50.9 | 3.5 | 0 | 5.3 | 8.8 | 14 | 26.3 | 0 | 40.4 | 0 | 0 | 0 | 0 | |

| | Cedar Avenue Southbound | | | | I-10 Westbound Off Ramp Westbound | | | | Cedar Avenue Northbound | | | | I-10 Westbound On Ramp Eastbound | | | | |
|---|---|---|---|---|---|---|---|---|---|---|---|---|---|---|---|---|---|
| Start Time | Left | Thru | Right | App. Total | Left | Thru | Right | App. Total | Left | Thru | Right | App. Total | Left | Thru | Right | App. Total | Int. Total |
| Peak Hour Analysis From 04:45 PM to 05:30 PM - Peak 1 of 1 | | | | | | | | | | | | | | | | | |
| Peak Hour for Entire Intersection Begins at 04:45 PM | | | | | | | | | | | | | | | | | |
| 04:45 PM | 0 | 2 | **2** | 4 | 0 | 0 | 0 | 0 | 0 | **5** | 0 | **5** | 0 | 0 | 0 | 0 | **9** |
| 05:00 PM | 0 | **8** | 0 | **8** | 0 | 0 | 0 | 0 | 0 | 1 | 0 | 1 | 0 | 0 | 0 | 0 | 9 |
| 05:15 PM | 0 | 2 | 0 | 2 | 0 | 0 | 0 | 0 | **1** | 0 | 0 | 1 | 0 | 0 | 0 | 0 | 3 |
| 05:30 PM | 0 | 2 | 1 | 3 | 0 | 0 | **2** | **2** | 0 | 3 | 0 | 3 | 0 | 0 | 0 | 0 | 8 |
| Total Volume | 0 | 14 | 3 | 17 | 0 | 0 | 2 | 2 | 1 | 9 | 0 | 10 | 0 | 0 | 0 | 0 | 29 |
| % App. Total | 0 | 82.4 | 17.6 | | 0 | 0 | 100 | | 10 | 90 | 0 | | 0 | 0 | 0 | | |
| PHF | .000 | .438 | .375 | .531 | .000 | .000 | .250 | .250 | .250 | .450 | .000 | .500 | .000 | .000 | .000 | .000 | .806 |

Counts Unlimited, Inc.
PO Box 1178
Corona, CA 92878
(951) 268-6268

County of San Bernardino
N/S: Cedar Avenue
E/W: I-10 Westbound On/Off Ramps
Weather: Clear

File Name : CSBCE10WPM
Site Code : 06714097
Start Date : 3/11/2014
Page No : 2

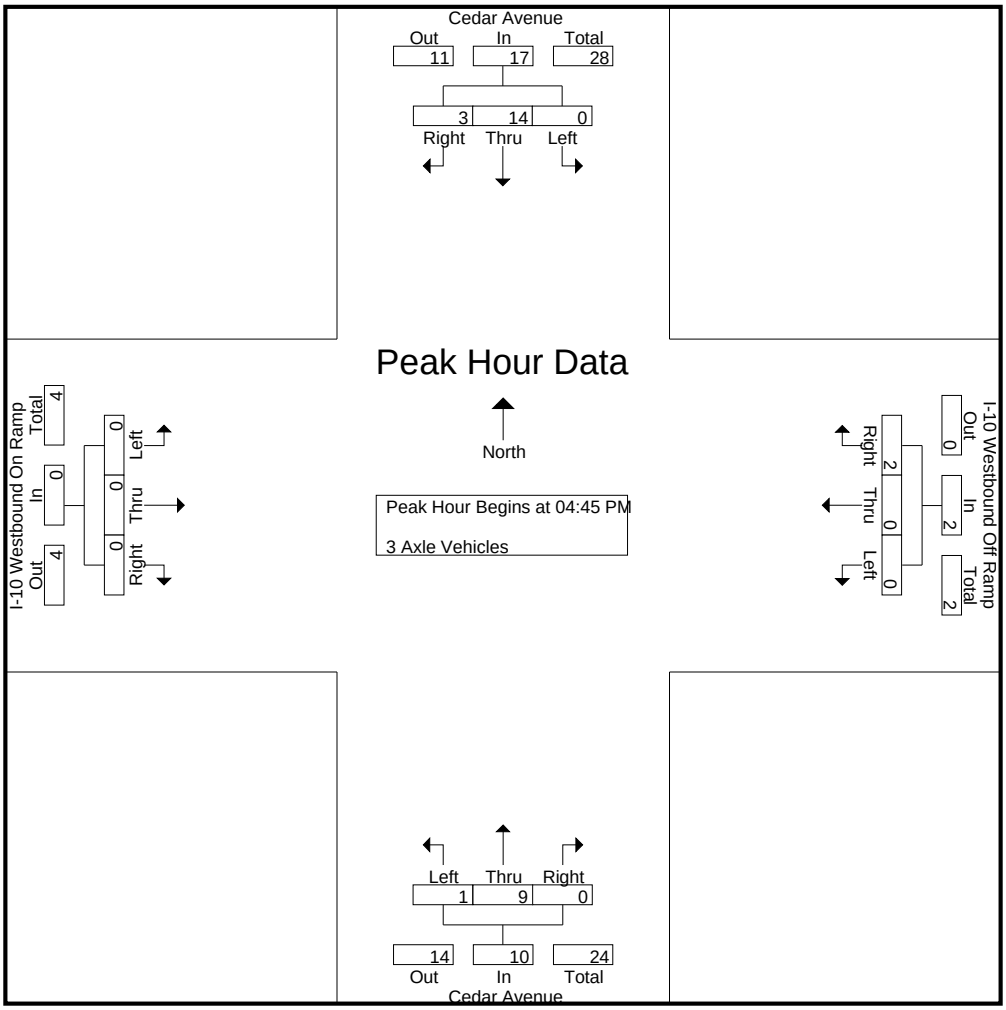


Peak Hour Analysis From 04:45 PM to 05:30 PM - Peak 1 of 1

Peak Hour for Each Approach Begins at:

| | 04:45 PM | | | | 04:45 PM | | | | 04:45 PM | | | | 04:45 PM | | | |
|---|---|---|---|---|---|---|---|---|---|---|---|---|---|---|---|---|
| +0 mins. | 0 | 2 | **2** | 4 | 0 | 0 | 0 | 0 | 0 | **5** | 0 | **5** | 0 | 0 | 0 | 0 |
| +15 mins. | 0 | **8** | 0 | **8** | 0 | 0 | 0 | 0 | 0 | 1 | 0 | 1 | 0 | 0 | 0 | 0 |
| +30 mins. | 0 | 2 | 0 | 2 | 0 | 0 | 0 | 0 | **1** | 0 | 0 | 1 | 0 | 0 | 0 | 0 |
| +45 mins. | 0 | 2 | 1 | 3 | 0 | 0 | **2** | **2** | 0 | 3 | 0 | 3 | 0 | 0 | 0 | 0 |
| Total Volume | 0 | 14 | 3 | 17 | 0 | 0 | 2 | 2 | 1 | 9 | 0 | 10 | 0 | 0 | 0 | 0 |
| % App. Total | 0 | 82.4 | 17.6 | | 0 | 0 | 100 | | 10 | 90 | 0 | | 0 | 0 | 0 | |
| PHF | .000 | .438 | .375 | .531 | .000 | .000 | .250 | .250 | .250 | .450 | .000 | .500 | .000 | .000 | .000 | .000 |

Counts Unlimited, Inc.
PO Box 1178
Corona, CA 92878
(951) 268-6268

County of San Bernardino
N/S: Cedar Avenue
E/W: I-10 Westbound On/Off Ramps
Weather: Clear

File Name : CSBCE10WPM
Site Code : 06714097
Start Date : 3/11/2014
Page No : 1

Groups Printed- 4+ Axle Trucks

| | Cedar Avenue Southbound | | | | I-10 Westbound Off Ramp Westbound | | | | Cedar Avenue Northbound | | | | I-10 Westbound On Ramp Eastbound | | | | |
|---|---|---|---|---|---|---|---|---|---|---|---|---|---|---|---|---|---|
| Start Time | Left | Thru | Right | App. Total | Left | Thru | Right | App. Total | Left | Thru | Right | App. Total | Left | Thru | Right | App. Total | Int. Total |
| 04:00 PM | 0 | 5 | 5 | 10 | 1 | 0 | 3 | 4 | 4 | 3 | 0 | 7 | 0 | 0 | 0 | 0 | 21 |
| 04:15 PM | 0 | 1 | 3 | 4 | 3 | 0 | 3 | 6 | 1 | 4 | 0 | 5 | 0 | 0 | 0 | 0 | 15 |
| 04:30 PM | 0 | 2 | 2 | 4 | 1 | 0 | 4 | 5 | 1 | 1 | 0 | 2 | 0 | 0 | 0 | 0 | 11 |
| 04:45 PM | 0 | 1 | 2 | 3 | 3 | 0 | 1 | 4 | 1 | 4 | 0 | 5 | 0 | 0 | 0 | 0 | 12 |
| Total | 0 | 9 | 12 | 21 | 8 | 0 | 11 | 19 | 7 | 12 | 0 | 19 | 0 | 0 | 0 | 0 | 59 |
| 05:00 PM | 0 | 3 | 2 | 5 | 2 | 0 | 0 | 2 | 3 | 3 | 0 | 6 | 0 | 0 | 0 | 0 | 13 |
| 05:15 PM | 0 | 1 | 6 | 7 | 2 | 0 | 1 | 3 | 2 | 0 | 0 | 2 | 0 | 0 | 0 | 0 | 12 |
| 05:30 PM | 0 | 0 | 2 | 2 | 3 | 0 | 4 | 7 | 2 | 2 | 0 | 4 | 0 | 0 | 0 | 0 | 13 |
| 05:45 PM | 0 | 1 | 2 | 3 | 3 | 0 | 1 | 4 | 0 | 6 | 0 | 6 | 0 | 0 | 0 | 0 | 13 |
| Total | 0 | 5 | 12 | 17 | 10 | 0 | 6 | 16 | 7 | 11 | 0 | 18 | 0 | 0 | 0 | 0 | 51 |
| Grand Total | 0 | 14 | 24 | 38 | 18 | 0 | 17 | 35 | 14 | 23 | 0 | 37 | 0 | 0 | 0 | 0 | 110 |
| Apprch % | 0 | 36.8 | 63.2 | | 51.4 | 0 | 48.6 | | 37.8 | 62.2 | 0 | | 0 | 0 | 0 | | |
| Total % | 0 | 12.7 | 21.8 | 34.5 | 16.4 | 0 | 15.5 | 31.8 | 12.7 | 20.9 | 0 | 33.6 | 0 | 0 | 0 | 0 | |

| | Cedar Avenue Southbound | | | | I-10 Westbound Off Ramp Westbound | | | | Cedar Avenue Northbound | | | | I-10 Westbound On Ramp Eastbound | | | | |
|---|---|---|---|---|---|---|---|---|---|---|---|---|---|---|---|---|---|
| Start Time | Left | Thru | Right | App. Total | Left | Thru | Right | App. Total | Left | Thru | Right | App. Total | Left | Thru | Right | App. Total | Int. Total |
| Peak Hour Analysis From 04:45 PM to 05:30 PM - Peak 1 of 1 | | | | | | | | | | | | | | | | | |
| Peak Hour for Entire Intersection Begins at 04:45 PM | | | | | | | | | | | | | | | | | |
| 04:45 PM | 0 | 1 | 2 | 3 | **3** | 0 | 1 | 4 | 1 | **4** | 0 | 5 | 0 | 0 | 0 | 0 | 12 |
| 05:00 PM | 0 | **3** | 2 | 5 | 2 | 0 | 0 | 2 | **3** | 3 | 0 | **6** | 0 | 0 | 0 | 0 | **13** |
| 05:15 PM | 0 | 1 | **6** | **7** | 2 | 0 | 1 | 3 | 2 | 0 | 0 | 2 | 0 | 0 | 0 | 0 | 12 |
| 05:30 PM | 0 | 0 | 2 | 2 | 3 | 0 | **4** | **7** | 2 | 2 | 0 | 4 | 0 | 0 | 0 | 0 | 13 |
| Total Volume | 0 | 5 | 12 | 17 | 10 | 0 | 6 | 16 | 8 | 9 | 0 | 17 | 0 | 0 | 0 | 0 | 50 |
| % App. Total | 0 | 29.4 | 70.6 | | 62.5 | 0 | 37.5 | | 47.1 | 52.9 | 0 | | 0 | 0 | 0 | | |
| PHF | .000 | .417 | .500 | .607 | .833 | .000 | .375 | .571 | .667 | .563 | .000 | .708 | .000 | .000 | .000 | .000 | .962 |

Counts Unlimited, Inc.
PO Box 1178
Corona, CA 92878
(951) 268-6268

County of San Bernardino
N/S: Cedar Avenue
E/W: I-10 Westbound On/Off Ramps
Weather: Clear

File Name : CSBCE10WPM
Site Code : 06714097
Start Date : 3/11/2014
Page No : 2

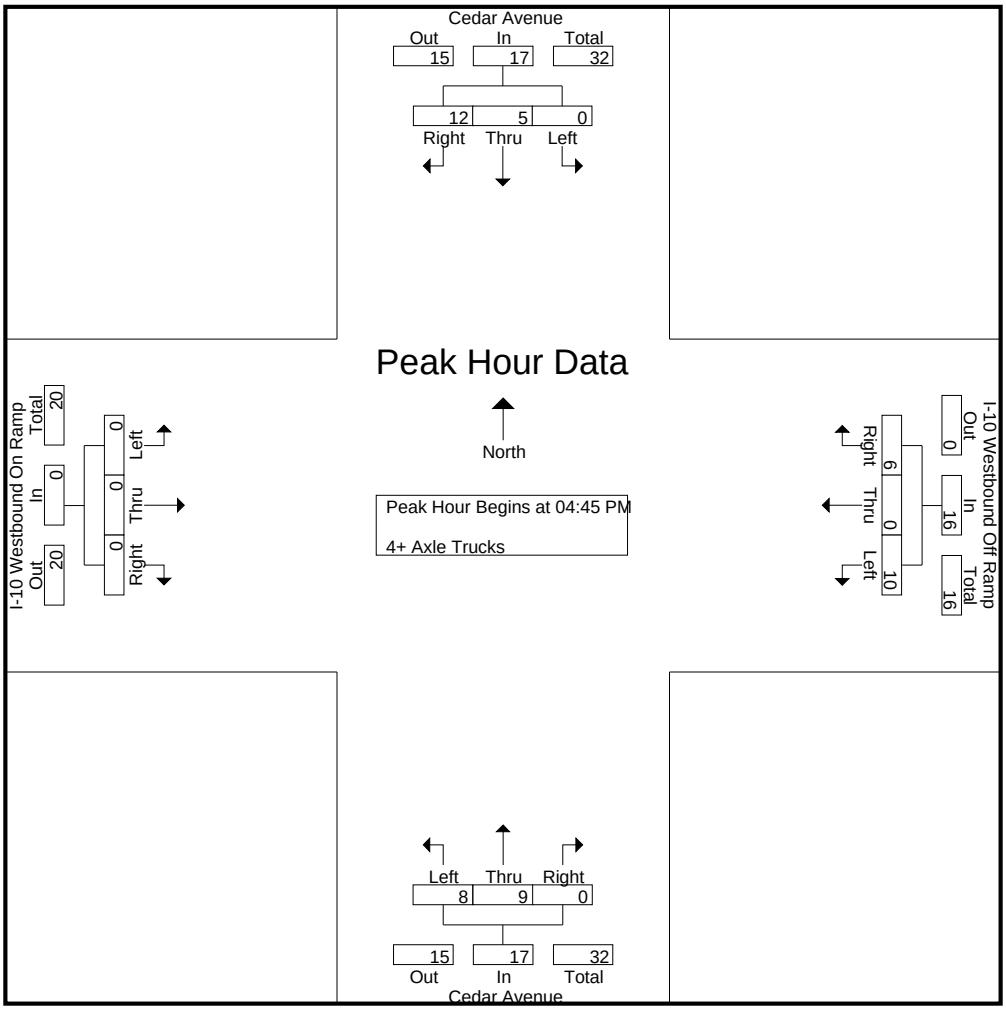


Peak Hour Analysis From 04:45 PM to 05:30 PM - Peak 1 of 1

Peak Hour for Each Approach Begins at:

| | 04:45 PM | | | | 04:45 PM | | | | 04:45 PM | | | | 04:45 PM | | | |
|---|---|---|---|---|---|---|---|---|---|---|---|---|---|---|---|---|
| +0 mins. | 0 | 1 | 2 | 3 | **3** | 0 | 1 | 4 | 1 | **4** | 0 | 5 | 0 | 0 | 0 | 0 |
| +15 mins. | 0 | **3** | 2 | 5 | 2 | 0 | 0 | 2 | **3** | 3 | 0 | **6** | 0 | 0 | 0 | 0 |
| +30 mins. | 0 | 1 | **6** | **7** | 2 | 0 | 1 | 3 | 2 | 0 | 0 | 2 | 0 | 0 | 0 | 0 |
| +45 mins. | 0 | 0 | 2 | 2 | 3 | 0 | **4** | **7** | 2 | 2 | 0 | 4 | 0 | 0 | 0 | 0 |
| Total Volume | 0 | 5 | 12 | 17 | 10 | 0 | 6 | 16 | 8 | 9 | 0 | 17 | 0 | 0 | 0 | 0 |
| % App. Total | 0 | 29.4 | 70.6 | | 62.5 | 0 | 37.5 | | 47.1 | 52.9 | 0 | | 0 | 0 | 0 | |
| PHF | .000 | .417 | .500 | .607 | .833 | .000 | .375 | .571 | .667 | .563 | .000 | .708 | .000 | .000 | .000 | .000 |

Counts Unlimited, Inc.
PO Box 1178
Corona, CA 92878
(951) 268-6268

County of San Bernardino
N/S: Cedar Avenue
E/W: I-10 Eastbound On/Off Ramps
Weather: Clear

File Name : CSBCE10EAM
Site Code : 06714097
Start Date : 3/11/2014
Page No : 1

Groups Printed- Passenger Vehicles - Large 2 Axle Vehicles - 3 Axle Vehicles - 4+ Axle Trucks

| | Cedar Avenue Southbound | | | | I-10 Eastbound On Ramp Westbound | | | | Cedar Avenue Northbound | | | | I-10 Eastbound Off Ramp Eastbound | | | | |
|---|---|---|---|---|---|---|---|---|---|---|---|---|---|---|---|---|---|
| Start Time | Left | Thru | Right | App. Total | Left | Thru | Right | App. Total | Left | Thru | Right | App. Total | Left | Thru | Right | App. Total | Int. Total |
| 07:00 AM | 86 | 204 | 0 | 290 | 0 | 0 | 0 | 0 | 0 | 210 | 63 | 273 | 107 | 0 | 49 | 156 | 719 |
| 07:15 AM | 112 | 220 | 0 | 332 | 0 | 0 | 0 | 0 | 0 | 239 | 81 | 320 | 110 | 1 | 64 | 175 | 827 |
| 07:30 AM | 130 | 251 | 0 | 381 | 0 | 0 | 0 | 0 | 0 | 250 | 95 | 345 | 126 | 0 | 60 | 186 | 912 |
| 07:45 AM | 139 | 249 | 0 | 388 | 0 | 0 | 0 | 0 | 0 | 229 | 74 | 303 | 125 | 1 | 48 | 174 | 865 |
| Total | 467 | 924 | 0 | 1391 | 0 | 0 | 0 | 0 | 0 | 928 | 313 | 1241 | 468 | 2 | 221 | 691 | 3323 |
| 08:00 AM | 107 | 185 | 0 | 292 | 0 | 0 | 0 | 0 | 0 | 143 | 58 | 201 | 104 | 2 | 62 | 168 | 661 |
| 08:15 AM | 86 | 168 | 0 | 254 | 0 | 0 | 0 | 0 | 0 | 168 | 61 | 229 | 77 | 0 | 51 | 128 | 611 |
| 08:30 AM | 110 | 152 | 0 | 262 | 0 | 0 | 0 | 0 | 0 | 167 | 78 | 245 | 71 | 0 | 42 | 113 | 620 |
| 08:45 AM | 91 | 151 | 0 | 242 | 0 | 0 | 0 | 0 | 0 | 165 | 48 | 213 | 72 | 0 | 39 | 111 | 566 |
| Total | 394 | 656 | 0 | 1050 | 0 | 0 | 0 | 0 | 0 | 643 | 245 | 888 | 324 | 2 | 194 | 520 | 2458 |
| Grand Total | 861 | 1580 | 0 | 2441 | 0 | 0 | 0 | 0 | 0 | 1571 | 558 | 2129 | 792 | 4 | 415 | 1211 | 5781 |
| Apprch % | 35.3 | 64.7 | 0 | | 0 | 0 | 0 | | 0 | 73.8 | 26.2 | | 65.4 | 0.3 | 34.3 | | |
| Total % | 14.9 | 27.3 | 0 | 42.2 | 0 | 0 | 0 | 0 | 0 | 27.2 | 9.7 | 36.8 | 13.7 | 0.1 | 7.2 | 20.9 | |
| Passenger Vehicles | 831 | 1504 | 0 | 2335 | 0 | 0 | 0 | 0 | 0 | 1441 | 520 | 1961 | 728 | 2 | 363 | 1093 | 5389 |
| % Passenger Vehicles | 96.5 | 95.2 | 0 | 95.7 | 0 | 0 | 0 | 0 | 0 | 91.7 | 93.2 | 92.1 | 91.9 | 50 | 87.5 | 90.3 | 93.2 |
| Large 2 Axle Vehicles | 15 | 46 | 0 | 61 | 0 | 0 | 0 | 0 | 0 | 76 | 8 | 84 | 25 | 2 | 15 | 42 | 187 |
| % Large 2 Axle Vehicles | 1.7 | 2.9 | 0 | 2.5 | 0 | 0 | 0 | 0 | 0 | 4.8 | 1.4 | 3.9 | 3.2 | 50 | 3.6 | 3.5 | 3.2 |
| 3 Axle Vehicles | 1 | 13 | 0 | 14 | 0 | 0 | 0 | 0 | 0 | 22 | 2 | 24 | 10 | 0 | 8 | 18 | 56 |
| % 3 Axle Vehicles | 0.1 | 0.8 | 0 | 0.6 | 0 | 0 | 0 | 0 | 0 | 1.4 | 0.4 | 1.1 | 1.3 | 0 | 1.9 | 1.5 | 1 |
| 4+ Axle Trucks | 14 | 17 | 0 | 31 | 0 | 0 | 0 | 0 | 0 | 32 | 28 | 60 | 29 | 0 | 29 | 58 | 149 |
| % 4+ Axle Trucks | 1.6 | 1.1 | 0 | 1.3 | 0 | 0 | 0 | 0 | 0 | 2 | 5 | 2.8 | 3.7 | 0 | 7 | 4.8 | 2.6 |

| | Cedar Avenue Southbound | | | | I-10 Eastbound On Ramp Westbound | | | | Cedar Avenue Northbound | | | | I-10 Eastbound Off Ramp Eastbound | | | | |
|---|---|---|---|---|---|---|---|---|---|---|---|---|---|---|---|---|---|
| Start Time | Left | Thru | Right | App. Total | Left | Thru | Right | App. Total | Left | Thru | Right | App. Total | Left | Thru | Right | App. Total | Int. Total |
| Peak Hour Analysis From 07:00 AM to 08:45 AM - Peak 1 of 1 | | | | | | | | | | | | | | | | | |
| Peak Hour for Entire Intersection Begins at 07:00 AM | | | | | | | | | | | | | | | | | |
| 07:00 AM | 86 | 204 | 0 | 290 | 0 | 0 | 0 | 0 | 0 | 210 | 63 | 273 | 107 | 0 | 49 | 156 | 719 |
| 07:15 AM | 112 | 220 | 0 | 332 | 0 | 0 | 0 | 0 | 0 | 239 | 81 | 320 | 110 | **1** | **64** | 175 | 827 |
| 07:30 AM | 130 | **251** | 0 | 381 | 0 | 0 | 0 | 0 | 0 | **250** | **95** | **345** | **126** | 0 | 60 | **186** | **912** |
| 07:45 AM | **139** | 249 | 0 | **388** | 0 | 0 | 0 | 0 | 0 | 229 | 74 | 303 | 125 | 1 | 48 | 174 | 865 |
| Total Volume | 467 | 924 | 0 | 1391 | 0 | 0 | 0 | 0 | 0 | 928 | 313 | 1241 | 468 | 2 | 221 | 691 | 3323 |
| % App. Total | 33.6 | 66.4 | 0 | | 0 | 0 | 0 | | 0 | 74.8 | 25.2 | | 67.7 | 0.3 | 32 | | |
| PHF | .840 | .920 | .000 | .896 | .000 | .000 | .000 | .000 | .000 | .928 | .824 | .899 | .929 | .500 | .863 | .929 | .911 |

Counts Unlimited, Inc.
PO Box 1178
Corona, CA 92878
(951) 268-6268

County of San Bernardino
N/S: Cedar Avenue
E/W: I-10 Eastbound On/Off Ramps
Weather: Clear

File Name : CSBCE10EAM
Site Code : 06714097
Start Date : 3/11/2014
Page No : 2

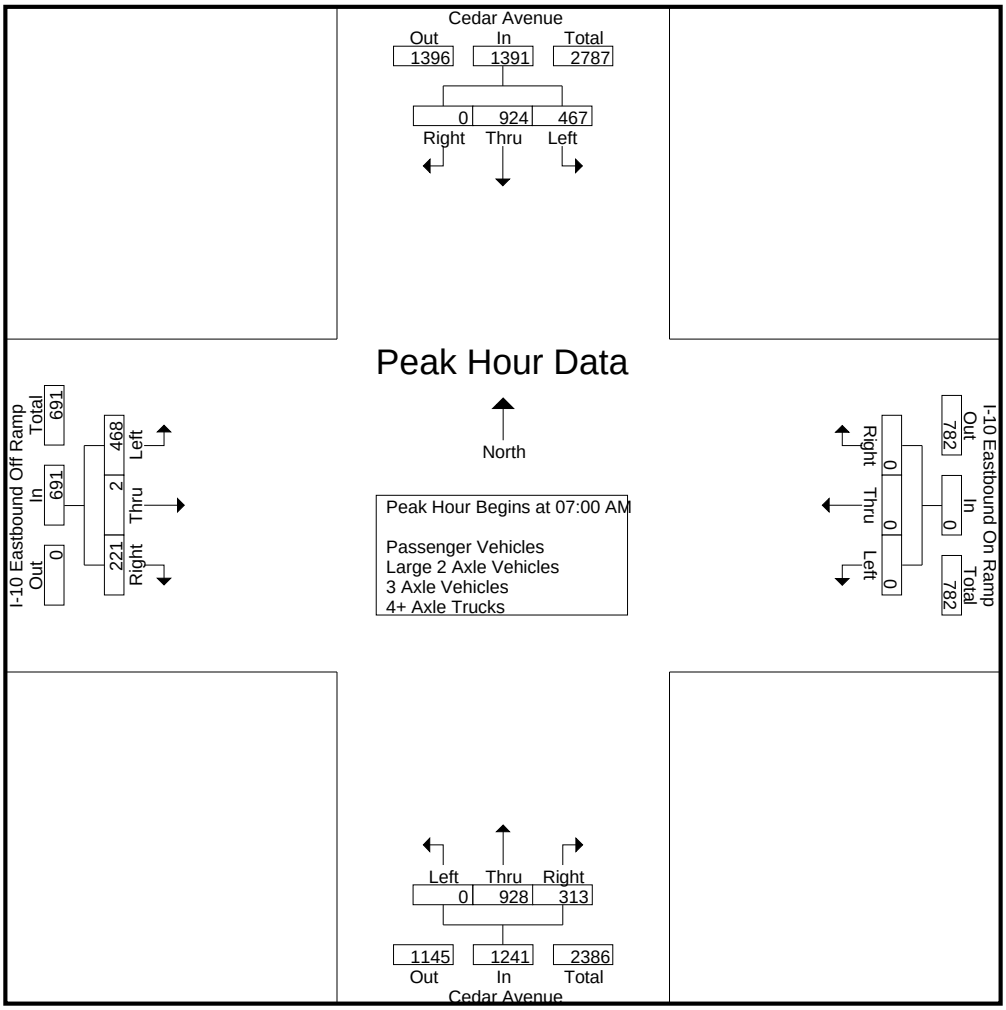


Peak Hour Analysis From 07:00 AM to 08:45 AM - Peak 1 of 1

Peak Hour for Each Approach Begins at:

| | 07:15 AM | | | | 07:00 AM | | | | 07:00 AM | | | | 07:15 AM | | | |
|---|---|---|---|---|---|---|---|---|---|---|---|---|---|---|---|---|
| +0 mins. | 112 | 220 | 0 | 332 | 0 | 0 | 0 | 0 | 0 | 210 | 63 | 273 | 110 | 1 | **64** | 175 |
| +15 mins. | 130 | **251** | 0 | 381 | 0 | 0 | 0 | 0 | 0 | 239 | 81 | 320 | **126** | 0 | 60 | **186** |
| +30 mins. | **139** | 249 | 0 | **388** | 0 | 0 | 0 | 0 | 0 | **250** | **95** | **345** | 125 | 1 | 48 | 174 |
| +45 mins. | 107 | 185 | 0 | 292 | 0 | 0 | 0 | 0 | 0 | 229 | 74 | 303 | 104 | **2** | 62 | 168 |
| Total Volume | 488 | 905 | 0 | 1393 | 0 | 0 | 0 | 0 | 0 | 928 | 313 | 1241 | 465 | 4 | 234 | 703 |
| % App. Total | 35 | 65 | 0 | | 0 | 0 | 0 | | 0 | 74.8 | 25.2 | | 66.1 | 0.6 | 33.3 | |
| PHF | .878 | .901 | .000 | .898 | .000 | .000 | .000 | .000 | .000 | .928 | .824 | .899 | .923 | .500 | .914 | .945 |

Counts Unlimited, Inc.
PO Box 1178
Corona, CA 92878
(951) 268-6268

County of San Bernardino
N/S: Cedar Avenue
E/W: I-10 Eastbound On/Off Ramps
Weather: Clear

File Name : CSBCE10EAM
Site Code : 06714097
Start Date : 3/11/2014
Page No : 1

Groups Printed- Passenger Vehicles

| | Cedar Avenue Southbound | | | | I-10 Eastbound On Ramp Westbound | | | | Cedar Avenue Northbound | | | | I-10 Eastbound Off Ramp Eastbound | | | | |
|---|---|---|---|---|---|---|---|---|---|---|---|---|---|---|---|---|---|
| Start Time | Left | Thru | Right | App. Total | Left | Thru | Right | App. Total | Left | Thru | Right | App. Total | Left | Thru | Right | App. Total | Int. Total |
| 07:00 AM | 82 | 197 | 0 | 279 | 0 | 0 | 0 | 0 | 0 | 196 | 59 | 255 | 97 | 0 | 43 | 140 | 674 |
| 07:15 AM | 109 | 209 | 0 | 318 | 0 | 0 | 0 | 0 | 0 | 219 | 75 | 294 | 103 | 0 | 61 | 164 | 776 |
| 07:30 AM | 130 | 234 | 0 | 364 | 0 | 0 | 0 | 0 | 0 | 230 | 90 | 320 | 121 | 0 | 53 | 174 | 858 |
| 07:45 AM | 134 | 236 | 0 | 370 | 0 | 0 | 0 | 0 | 0 | 219 | 70 | 289 | 118 | 1 | 37 | 156 | 815 |
| Total | 455 | 876 | 0 | 1331 | 0 | 0 | 0 | 0 | 0 | 864 | 294 | 1158 | 439 | 1 | 194 | 634 | 3123 |
| 08:00 AM | 102 | 180 | 0 | 282 | 0 | 0 | 0 | 0 | 0 | 127 | 52 | 179 | 91 | 1 | 54 | 146 | 607 |
| 08:15 AM | 83 | 160 | 0 | 243 | 0 | 0 | 0 | 0 | 0 | 158 | 54 | 212 | 71 | 0 | 47 | 118 | 573 |
| 08:30 AM | 105 | 148 | 0 | 253 | 0 | 0 | 0 | 0 | 0 | 151 | 73 | 224 | 63 | 0 | 37 | 100 | 577 |
| 08:45 AM | 86 | 140 | 0 | 226 | 0 | 0 | 0 | 0 | 0 | 141 | 47 | 188 | 64 | 0 | 31 | 95 | 509 |
| Total | 376 | 628 | 0 | 1004 | 0 | 0 | 0 | 0 | 0 | 577 | 226 | 803 | 289 | 1 | 169 | 459 | 2266 |
| Grand Total | 831 | 1504 | 0 | 2335 | 0 | 0 | 0 | 0 | 0 | 1441 | 520 | 1961 | 728 | 2 | 363 | 1093 | 5389 |
| Apprch % | 35.6 | 64.4 | 0 | | 0 | 0 | 0 | | 0 | 73.5 | 26.5 | | 66.6 | 0.2 | 33.2 | | |
| Total % | 15.4 | 27.9 | 0 | 43.3 | 0 | 0 | 0 | 0 | 0 | 26.7 | 9.6 | 36.4 | 13.5 | 0 | 6.7 | 20.3 | |

| | Cedar Avenue Southbound | | | | I-10 Eastbound On Ramp Westbound | | | | Cedar Avenue Northbound | | | | I-10 Eastbound Off Ramp Eastbound | | | | |
|---|---|---|---|---|---|---|---|---|---|---|---|---|---|---|---|---|---|
| Start Time | Left | Thru | Right | App. Total | Left | Thru | Right | App. Total | Left | Thru | Right | App. Total | Left | Thru | Right | App. Total | Int. Total |
| Peak Hour Analysis From 07:00 AM to 07:45 AM - Peak 1 of 1 | | | | | | | | | | | | | | | | | |
| Peak Hour for Entire Intersection Begins at 07:00 AM | | | | | | | | | | | | | | | | | |
| 07:00 AM | 82 | 197 | 0 | 279 | 0 | 0 | 0 | 0 | 0 | 196 | 59 | 255 | 97 | 0 | 43 | 140 | 674 |
| 07:15 AM | 109 | 209 | 0 | 318 | 0 | 0 | 0 | 0 | 0 | 219 | 75 | 294 | 103 | 0 | **61** | 164 | 776 |
| 07:30 AM | 130 | 234 | 0 | 364 | 0 | 0 | 0 | 0 | 0 | **230** | **90** | **320** | **121** | 0 | 53 | **174** | **858** |
| 07:45 AM | **134** | **236** | 0 | **370** | 0 | 0 | 0 | 0 | 0 | 219 | 70 | 289 | 118 | **1** | 37 | 156 | 815 |
| Total Volume | 455 | 876 | 0 | 1331 | 0 | 0 | 0 | 0 | 0 | 864 | 294 | 1158 | 439 | 1 | 194 | 634 | 3123 |
| % App. Total | 34.2 | 65.8 | 0 | | 0 | 0 | 0 | | 0 | 74.6 | 25.4 | | 69.2 | 0.2 | 30.6 | | |
| PHF | .849 | .928 | .000 | .899 | .000 | .000 | .000 | .000 | .000 | .939 | .817 | .905 | .907 | .250 | .795 | .911 | .910 |

Counts Unlimited, Inc.
PO Box 1178
Corona, CA 92878
(951) 268-6268

County of San Bernardino
N/S: Cedar Avenue
E/W: I-10 Eastbound On/Off Ramps
Weather: Clear

File Name : CSBCE10EAM
Site Code : 06714097
Start Date : 3/11/2014
Page No : 2

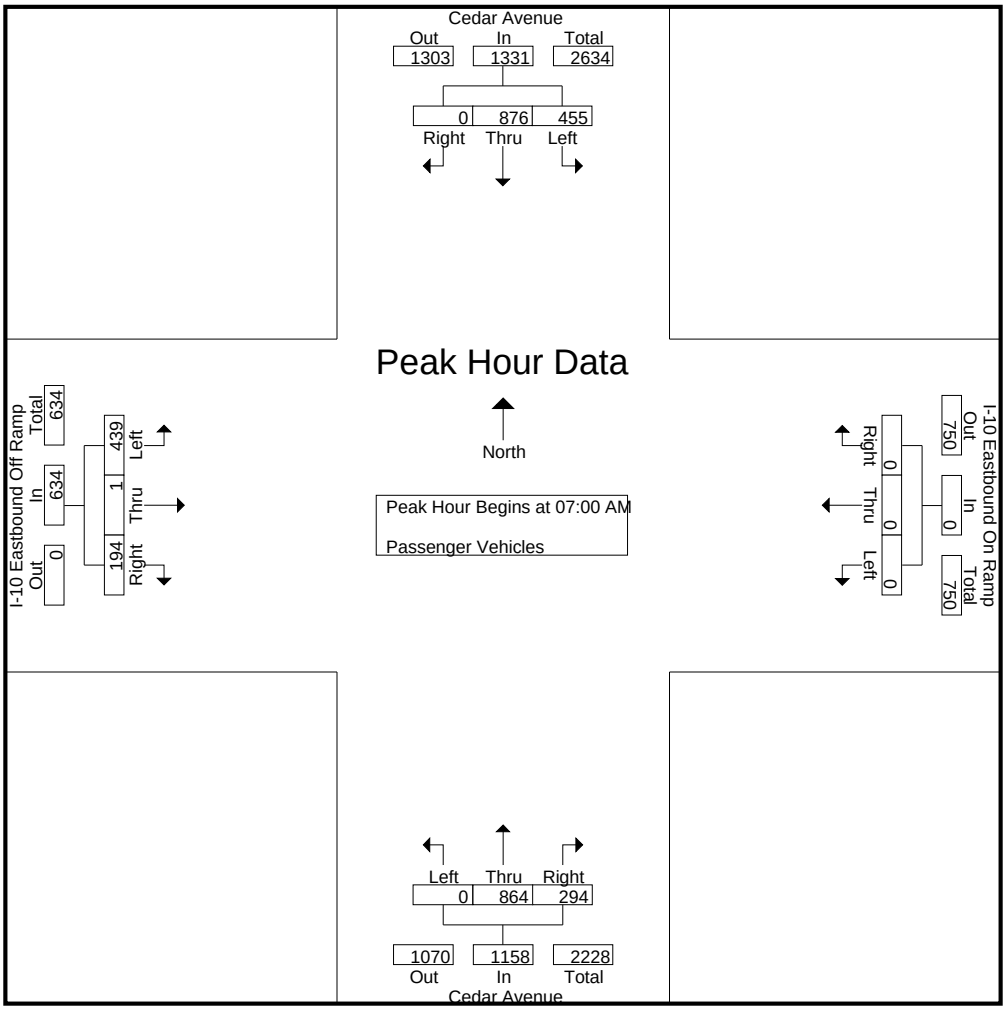


Peak Hour Analysis From 07:00 AM to 07:45 AM - Peak 1 of 1

Peak Hour for Each Approach Begins at:

| | 07:00 AM | | | | 07:00 AM | | | | 07:00 AM | | | | 07:00 AM | | | |
|---|---|---|---|---|---|---|---|---|---|---|---|---|---|---|---|---|
| +0 mins. | 82 | 197 | 0 | 279 | 0 | 0 | 0 | 0 | 0 | 196 | 59 | 255 | 97 | 0 | 43 | 140 |
| +15 mins. | 109 | 209 | 0 | 318 | 0 | 0 | 0 | 0 | 0 | 219 | 75 | 294 | 103 | 0 | **61** | 164 |
| +30 mins. | 130 | 234 | 0 | 364 | 0 | 0 | 0 | 0 | 0 | **230** | **90** | **320** | **121** | 0 | 53 | **174** |
| +45 mins. | **134** | **236** | 0 | **370** | 0 | 0 | 0 | 0 | 0 | 219 | 70 | 289 | 118 | **1** | 37 | 156 |
| Total Volume | 455 | 876 | 0 | 1331 | 0 | 0 | 0 | 0 | 0 | 864 | 294 | 1158 | 439 | 1 | 194 | 634 |
| % App. Total | 34.2 | 65.8 | 0 | | 0 | 0 | 0 | | 0 | 74.6 | 25.4 | | 69.2 | 0.2 | 30.6 | |
| PHF | .849 | .928 | .000 | .899 | .000 | .000 | .000 | .000 | .000 | .939 | .817 | .905 | .907 | .250 | .795 | .911 |

Counts Unlimited, Inc.
PO Box 1178
Corona, CA 92878
(951) 268-6268

County of San Bernardino
N/S: Cedar Avenue
E/W: I-10 Eastbound On/Off Ramps
Weather: Clear

File Name : CSBCE10EAM
Site Code : 06714097
Start Date : 3/11/2014
Page No : 1

Groups Printed- Large 2 Axle Vehicles

| | Cedar Avenue Southbound | | | | I-10 Eastbound On Ramp Westbound | | | | Cedar Avenue Northbound | | | | I-10 Eastbound Off Ramp Eastbound | | | | |
|---|---|---|---|---|---|---|---|---|---|---|---|---|---|---|---|---|---|
| Start Time | Left | Thru | Right | App. Total | Left | Thru | Right | App. Total | Left | Thru | Right | App. Total | Left | Thru | Right | App. Total | Int. Total |
| 07:00 AM | 1 | 6 | 0 | 7 | 0 | 0 | 0 | 0 | 0 | 6 | 1 | 7 | 2 | 0 | 3 | 5 | 19 |
| 07:15 AM | 1 | 6 | 0 | 7 | 0 | 0 | 0 | 0 | 0 | 13 | 0 | 13 | 2 | 1 | 1 | 4 | 24 |
| 07:30 AM | 0 | 9 | 0 | 9 | 0 | 0 | 0 | 0 | 0 | 13 | 1 | 14 | 2 | 0 | 4 | 6 | 29 |
| 07:45 AM | 3 | 6 | 0 | 9 | 0 | 0 | 0 | 0 | 0 | 8 | 1 | 9 | 3 | 0 | 2 | 5 | 23 |
| Total | 5 | 27 | 0 | 32 | 0 | 0 | 0 | 0 | 0 | 40 | 3 | 43 | 9 | 1 | 10 | 20 | 95 |
| 08:00 AM | 1 | 3 | 0 | 4 | 0 | 0 | 0 | 0 | 0 | 8 | 0 | 8 | 5 | 1 | 2 | 8 | 20 |
| 08:15 AM | 2 | 5 | 0 | 7 | 0 | 0 | 0 | 0 | 0 | 8 | 3 | 11 | 4 | 0 | 0 | 4 | 22 |
| 08:30 AM | 2 | 2 | 0 | 4 | 0 | 0 | 0 | 0 | 0 | 8 | 1 | 9 | 2 | 0 | 0 | 2 | 15 |
| 08:45 AM | 5 | 9 | 0 | 14 | 0 | 0 | 0 | 0 | 0 | 12 | 1 | 13 | 5 | 0 | 3 | 8 | 35 |
| Total | 10 | 19 | 0 | 29 | 0 | 0 | 0 | 0 | 0 | 36 | 5 | 41 | 16 | 1 | 5 | 22 | 92 |
| Grand Total | 15 | 46 | 0 | 61 | 0 | 0 | 0 | 0 | 0 | 76 | 8 | 84 | 25 | 2 | 15 | 42 | 187 |
| Apprch % | 24.6 | 75.4 | 0 | | 0 | 0 | 0 | | 0 | 90.5 | 9.5 | | 59.5 | 4.8 | 35.7 | | |
| Total % | 8 | 24.6 | 0 | 32.6 | 0 | 0 | 0 | 0 | 0 | 40.6 | 4.3 | 44.9 | 13.4 | 1.1 | 8 | 22.5 | |

| | Cedar Avenue Southbound | | | | I-10 Eastbound On Ramp Westbound | | | | Cedar Avenue Northbound | | | | I-10 Eastbound Off Ramp Eastbound | | | | |
|---|---|---|---|---|---|---|---|---|---|---|---|---|---|---|---|---|---|
| Start Time | Left | Thru | Right | App. Total | Left | Thru | Right | App. Total | Left | Thru | Right | App. Total | Left | Thru | Right | App. Total | Int. Total |
| Peak Hour Analysis From 07:00 AM to 07:45 AM - Peak 1 of 1 | | | | | | | | | | | | | | | | | |
| Peak Hour for Entire Intersection Begins at 07:00 AM | | | | | | | | | | | | | | | | | |
| 07:00 AM | 1 | 6 | 0 | 7 | 0 | 0 | 0 | 0 | 0 | 6 | **1** | 7 | 2 | 0 | 3 | 5 | 19 |
| 07:15 AM | 1 | 6 | 0 | 7 | 0 | 0 | 0 | 0 | 0 | **13** | 0 | 13 | 2 | **1** | 1 | 4 | 24 |
| 07:30 AM | 0 | **9** | 0 | **9** | 0 | 0 | 0 | 0 | 0 | 13 | 1 | **14** | 2 | 0 | **4** | **6** | **29** |
| 07:45 AM | **3** | 6 | 0 | 9 | 0 | 0 | 0 | 0 | 0 | 8 | 1 | 9 | **3** | 0 | 2 | 5 | 23 |
| Total Volume | 5 | 27 | 0 | 32 | 0 | 0 | 0 | 0 | 0 | 40 | 3 | 43 | 9 | 1 | 10 | 20 | 95 |
| % App. Total | 15.6 | 84.4 | 0 | | 0 | 0 | 0 | | 0 | 93 | 7 | | 45 | 5 | 50 | | |
| PHF | .417 | .750 | .000 | .889 | .000 | .000 | .000 | .000 | .000 | .769 | .750 | .768 | .750 | .250 | .625 | .833 | .819 |

Counts Unlimited, Inc.
PO Box 1178
Corona, CA 92878
(951) 268-6268

County of San Bernardino
N/S: Cedar Avenue
E/W: I-10 Eastbound On/Off Ramps
Weather: Clear

File Name : CSBCE10EAM
Site Code : 06714097
Start Date : 3/11/2014
Page No : 2

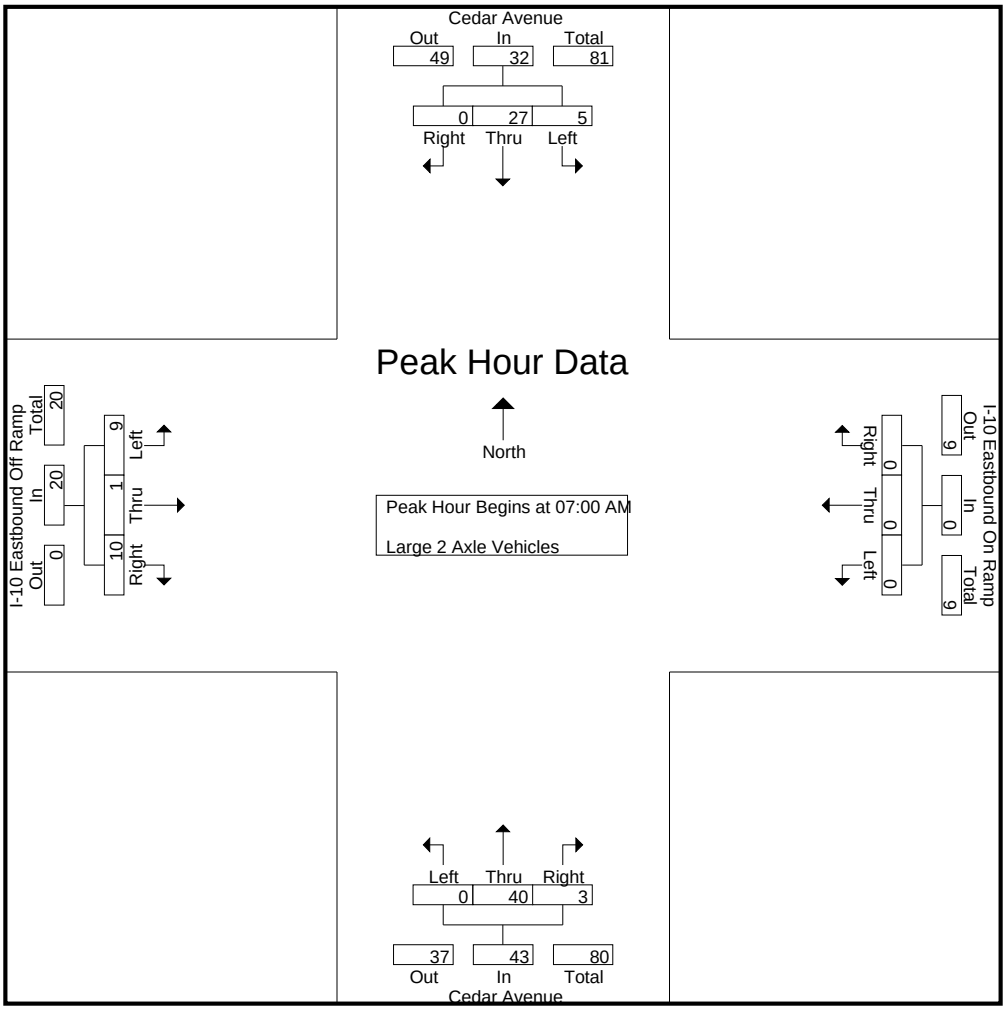


Peak Hour Analysis From 07:00 AM to 07:45 AM - Peak 1 of 1

Peak Hour for Each Approach Begins at:

| | 07:00 AM | | | | 07:00 AM | | | | 07:00 AM | | | | 07:00 AM | | | |
|---|---|---|---|---|---|---|---|---|---|---|---|---|---|---|---|---|
| +0 mins. | 1 | 6 | 0 | 7 | 0 | 0 | 0 | 0 | 0 | 6 | **1** | 7 | 2 | 0 | 3 | 5 |
| +15 mins. | 1 | 6 | 0 | 7 | 0 | 0 | 0 | 0 | 0 | **13** | 0 | 13 | 2 | **1** | 1 | 4 |
| +30 mins. | 0 | **9** | 0 | **9** | 0 | 0 | 0 | 0 | 0 | 13 | 1 | **14** | 2 | 0 | **4** | **6** |
| +45 mins. | **3** | 6 | 0 | 9 | 0 | 0 | 0 | 0 | 0 | 8 | 1 | 9 | **3** | 0 | 2 | 5 |
| Total Volume | 5 | 27 | 0 | 32 | 0 | 0 | 0 | 0 | 0 | 40 | 3 | 43 | 9 | 1 | 10 | 20 |
| % App. Total | 15.6 | 84.4 | 0 | | 0 | 0 | 0 | | 0 | 93 | 7 | | 45 | 5 | 50 | |
| PHF | .417 | .750 | .000 | .889 | .000 | .000 | .000 | .000 | .000 | .769 | .750 | .768 | .750 | .250 | .625 | .833 |

Counts Unlimited, Inc.
PO Box 1178
Corona, CA 92878
(951) 268-6268

County of San Bernardino
N/S: Cedar Avenue
E/W: I-10 Eastbound On/Off Ramps
Weather: Clear

File Name : CSBCE10EAM
Site Code : 06714097
Start Date : 3/11/2014
Page No : 1

Groups Printed- 3 Axle Vehicles

| | Cedar Avenue Southbound | | | | I-10 Eastbound On Ramp Westbound | | | | Cedar Avenue Northbound | | | | I-10 Eastbound Off Ramp Eastbound | | | | |
|---|---|---|---|---|---|---|---|---|---|---|---|---|---|---|---|---|---|
| Start Time | Left | Thru | Right | App. Total | Left | Thru | Right | App. Total | Left | Thru | Right | App. Total | Left | Thru | Right | App. Total | Int. Total |
| 07:00 AM | 0 | 1 | 0 | 1 | 0 | 0 | 0 | 0 | 0 | 5 | 0 | 5 | 1 | 0 | 0 | 1 | 7 |
| 07:15 AM | 0 | 2 | 0 | 2 | 0 | 0 | 0 | 0 | 0 | 4 | 0 | 4 | 0 | 0 | 0 | 0 | 6 |
| 07:30 AM | 0 | 3 | 0 | 3 | 0 | 0 | 0 | 0 | 0 | 2 | 0 | 2 | 1 | 0 | 0 | 1 | 6 |
| 07:45 AM | 0 | 3 | 0 | 3 | 0 | 0 | 0 | 0 | 0 | 1 | 0 | 1 | 1 | 0 | 0 | 1 | 5 |
| Total | 0 | 9 | 0 | 9 | 0 | 0 | 0 | 0 | 0 | 12 | 0 | 12 | 3 | 0 | 0 | 3 | 24 |
| 08:00 AM | 1 | 2 | 0 | 3 | 0 | 0 | 0 | 0 | 0 | 4 | 1 | 5 | 4 | 0 | 1 | 5 | 13 |
| 08:15 AM | 0 | 1 | 0 | 1 | 0 | 0 | 0 | 0 | 0 | 2 | 1 | 3 | 1 | 0 | 1 | 2 | 6 |
| 08:30 AM | 0 | 1 | 0 | 1 | 0 | 0 | 0 | 0 | 0 | 3 | 0 | 3 | 1 | 0 | 2 | 3 | 7 |
| 08:45 AM | 0 | 0 | 0 | 0 | 0 | 0 | 0 | 0 | 0 | 1 | 0 | 1 | 1 | 0 | 4 | 5 | 6 |
| Total | 1 | 4 | 0 | 5 | 0 | 0 | 0 | 0 | 0 | 10 | 2 | 12 | 7 | 0 | 8 | 15 | 32 |
| Grand Total | 1 | 13 | 0 | 14 | 0 | 0 | 0 | 0 | 0 | 22 | 2 | 24 | 10 | 0 | 8 | 18 | 56 |
| Apprch % | 7.1 | 92.9 | 0 | | 0 | 0 | 0 | | 0 | 91.7 | 8.3 | | 55.6 | 0 | 44.4 | | |
| Total % | 1.8 | 23.2 | 0 | 25 | 0 | 0 | 0 | 0 | 0 | 39.3 | 3.6 | 42.9 | 17.9 | 0 | 14.3 | 32.1 | |

| | Cedar Avenue Southbound | | | | I-10 Eastbound On Ramp Westbound | | | | Cedar Avenue Northbound | | | | I-10 Eastbound Off Ramp Eastbound | | | | |
|---|---|---|---|---|---|---|---|---|---|---|---|---|---|---|---|---|---|
| Start Time | Left | Thru | Right | App. Total | Left | Thru | Right | App. Total | Left | Thru | Right | App. Total | Left | Thru | Right | App. Total | Int. Total |
| Peak Hour Analysis From 07:00 AM to 07:45 AM - Peak 1 of 1 | | | | | | | | | | | | | | | | | |
| Peak Hour for Entire Intersection Begins at 07:00 AM | | | | | | | | | | | | | | | | | |
| 07:00 AM | 0 | 1 | 0 | 1 | 0 | 0 | 0 | 0 | 0 | **5** | 0 | **5** | **1** | 0 | 0 | **1** | **7** |
| 07:15 AM | 0 | 2 | 0 | 2 | 0 | 0 | 0 | 0 | 0 | 4 | 0 | 4 | 0 | 0 | 0 | 0 | 6 |
| 07:30 AM | 0 | **3** | 0 | **3** | 0 | 0 | 0 | 0 | 0 | 2 | 0 | 2 | 1 | 0 | 0 | 1 | 6 |
| 07:45 AM | 0 | 3 | 0 | 3 | 0 | 0 | 0 | 0 | 0 | 1 | 0 | 1 | 1 | 0 | 0 | 1 | 5 |
| Total Volume | 0 | 9 | 0 | 9 | 0 | 0 | 0 | 0 | 0 | 12 | 0 | 12 | 3 | 0 | 0 | 3 | 24 |
| % App. Total | 0 | 100 | 0 | | 0 | 0 | 0 | | 0 | 100 | 0 | | 100 | 0 | 0 | | |
| PHF | .000 | .750 | .000 | .750 | .000 | .000 | .000 | .000 | .000 | .600 | .000 | .600 | .750 | .000 | .000 | .750 | .857 |

Counts Unlimited, Inc.
PO Box 1178
Corona, CA 92878
(951) 268-6268

County of San Bernardino
N/S: Cedar Avenue
E/W: I-10 Eastbound On/Off Ramps
Weather: Clear

File Name : CSBCE10EAM
Site Code : 06714097
Start Date : 3/11/2014
Page No : 2

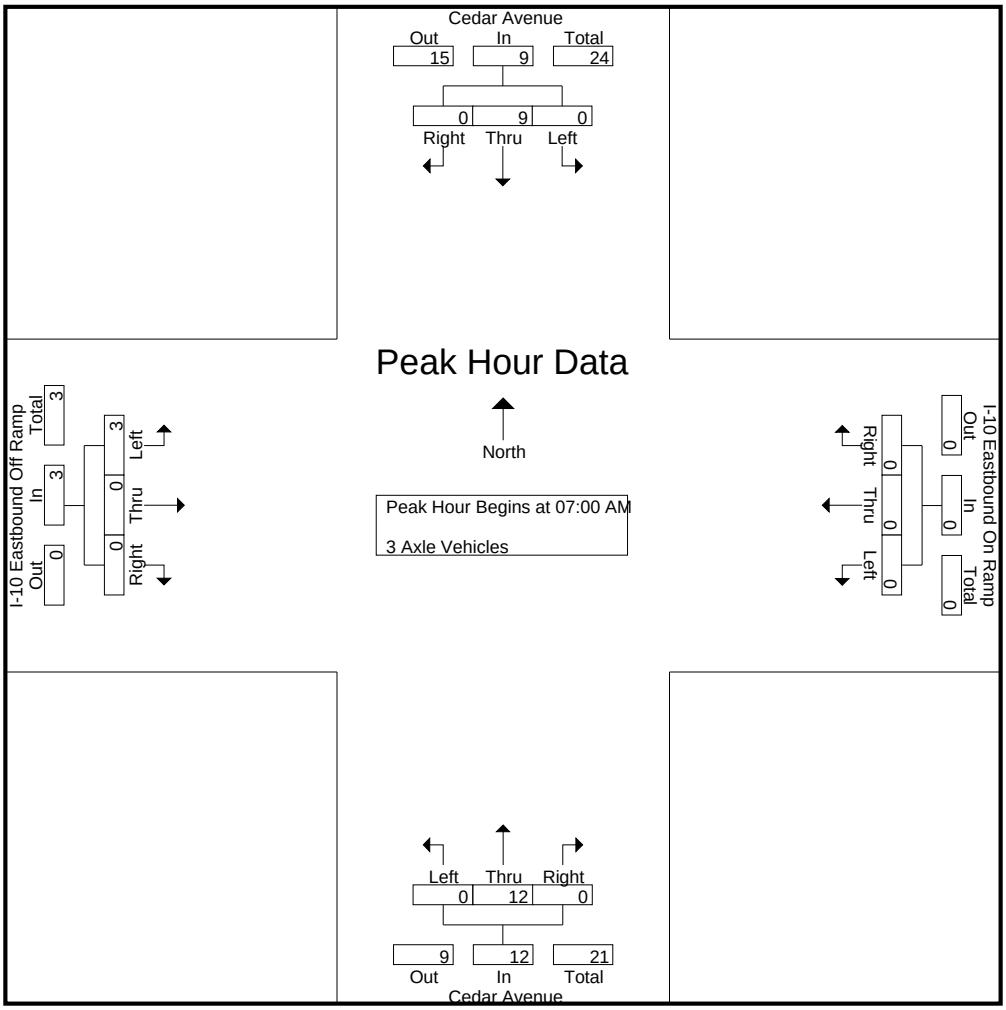


Peak Hour Analysis From 07:00 AM to 07:45 AM - Peak 1 of 1

Peak Hour for Each Approach Begins at:

| | 07:00 AM | | | | 07:00 AM | | | | 07:00 AM | | | | 07:00 AM | | | |
|---|---|---|---|---|---|---|---|---|---|---|---|---|---|---|---|---|
| +0 mins. | 0 | 1 | 0 | 1 | 0 | 0 | 0 | 0 | 0 | **5** | 0 | **5** | **1** | 0 | 0 | **1** |
| +15 mins. | 0 | 2 | 0 | 2 | 0 | 0 | 0 | 0 | 0 | 4 | 0 | 4 | 0 | 0 | 0 | 0 |
| +30 mins. | 0 | **3** | 0 | **3** | 0 | 0 | 0 | 0 | 0 | 2 | 0 | 2 | 1 | 0 | 0 | 1 |
| +45 mins. | 0 | 3 | 0 | 3 | 0 | 0 | 0 | 0 | 0 | 1 | 0 | 1 | 1 | 0 | 0 | 1 |
| Total Volume | 0 | 9 | 0 | 9 | 0 | 0 | 0 | 0 | 0 | 12 | 0 | 12 | 3 | 0 | 0 | 3 |
| % App. Total | 0 | 100 | 0 | | 0 | 0 | 0 | | 0 | 100 | 0 | | 100 | 0 | 0 | |
| PHF | .000 | .750 | .000 | .750 | .000 | .000 | .000 | .000 | .000 | .600 | .000 | .600 | .750 | .000 | .000 | .750 |

Counts Unlimited, Inc.
PO Box 1178
Corona, CA 92878
(951) 268-6268

County of San Bernardino
N/S: Cedar Avenue
E/W: I-10 Eastbound On/Off Ramps
Weather: Clear

File Name : CSBCE10EAM
Site Code : 06714097
Start Date : 3/11/2014
Page No : 1

Groups Printed- 4+ Axle Trucks

| | Cedar Avenue Southbound | | | | I-10 Eastbound On Ramp Westbound | | | | Cedar Avenue Northbound | | | | I-10 Eastbound Off Ramp Eastbound | | | | |
|---|---|---|---|---|---|---|---|---|---|---|---|---|---|---|---|---|---|
| Start Time | Left | Thru | Right | App. Total | Left | Thru | Right | App. Total | Left | Thru | Right | App. Total | Left | Thru | Right | App. Total | Int. Total |
| 07:00 AM | 3 | 0 | 0 | 3 | 0 | 0 | 0 | 0 | 0 | 3 | 3 | 6 | 7 | 0 | 3 | 10 | 19 |
| 07:15 AM | 2 | 3 | 0 | 5 | 0 | 0 | 0 | 0 | 0 | 3 | 6 | 9 | 5 | 0 | 2 | 7 | 21 |
| 07:30 AM | 0 | 5 | 0 | 5 | 0 | 0 | 0 | 0 | 0 | 5 | 4 | 9 | 2 | 0 | 3 | 5 | 19 |
| 07:45 AM | 2 | 4 | 0 | 6 | 0 | 0 | 0 | 0 | 0 | 1 | 3 | 4 | 3 | 0 | 9 | 12 | 22 |
| Total | 7 | 12 | 0 | 19 | 0 | 0 | 0 | 0 | 0 | 12 | 16 | 28 | 17 | 0 | 17 | 34 | 81 |
| 08:00 AM | 3 | 0 | 0 | 3 | 0 | 0 | 0 | 0 | 0 | 4 | 5 | 9 | 4 | 0 | 5 | 9 | 21 |
| 08:15 AM | 1 | 2 | 0 | 3 | 0 | 0 | 0 | 0 | 0 | 0 | 3 | 3 | 1 | 0 | 3 | 4 | 10 |
| 08:30 AM | 3 | 1 | 0 | 4 | 0 | 0 | 0 | 0 | 0 | 5 | 4 | 9 | 5 | 0 | 3 | 8 | 21 |
| 08:45 AM | 0 | 2 | 0 | 2 | 0 | 0 | 0 | 0 | 0 | 11 | 0 | 11 | 2 | 0 | 1 | 3 | 16 |
| Total | 7 | 5 | 0 | 12 | 0 | 0 | 0 | 0 | 0 | 20 | 12 | 32 | 12 | 0 | 12 | 24 | 68 |
| Grand Total | 14 | 17 | 0 | 31 | 0 | 0 | 0 | 0 | 0 | 32 | 28 | 60 | 29 | 0 | 29 | 58 | 149 |
| Apprch % | 45.2 | 54.8 | 0 | | 0 | 0 | 0 | | 0 | 53.3 | 46.7 | | 50 | 0 | 50 | | |
| Total % | 9.4 | 11.4 | 0 | 20.8 | 0 | 0 | 0 | 0 | 0 | 21.5 | 18.8 | 40.3 | 19.5 | 0 | 19.5 | 38.9 | |

| | Cedar Avenue Southbound | | | | I-10 Eastbound On Ramp Westbound | | | | Cedar Avenue Northbound | | | | I-10 Eastbound Off Ramp Eastbound | | | | |
|---|---|---|---|---|---|---|---|---|---|---|---|---|---|---|---|---|---|
| Start Time | Left | Thru | Right | App. Total | Left | Thru | Right | App. Total | Left | Thru | Right | App. Total | Left | Thru | Right | App. Total | Int. Total |
| Peak Hour Analysis From 07:00 AM to 07:45 AM - Peak 1 of 1 | | | | | | | | | | | | | | | | | |
| Peak Hour for Entire Intersection Begins at 07:00 AM | | | | | | | | | | | | | | | | | |
| 07:00 AM | **3** | 0 | 0 | 3 | 0 | 0 | 0 | 0 | 0 | 3 | 3 | 6 | **7** | 0 | 3 | 10 | 19 |
| 07:15 AM | 2 | 3 | 0 | 5 | 0 | 0 | 0 | 0 | 0 | 3 | **6** | **9** | 5 | 0 | 2 | 7 | 21 |
| 07:30 AM | 0 | **5** | 0 | 5 | 0 | 0 | 0 | 0 | 0 | **5** | 4 | 9 | 2 | 0 | 3 | 5 | 19 |
| 07:45 AM | 2 | 4 | 0 | **6** | 0 | 0 | 0 | 0 | 0 | 1 | 3 | 4 | 3 | 0 | **9** | **12** | **22** |
| Total Volume | 7 | 12 | 0 | 19 | 0 | 0 | 0 | 0 | 0 | 12 | 16 | 28 | 17 | 0 | 17 | 34 | 81 |
| % App. Total | 36.8 | 63.2 | 0 | | 0 | 0 | 0 | | 0 | 42.9 | 57.1 | | 50 | 0 | 50 | | |
| PHF | .583 | .600 | .000 | .792 | .000 | .000 | .000 | .000 | .000 | .600 | .667 | .778 | .607 | .000 | .472 | .708 | .920 |

Counts Unlimited, Inc.
PO Box 1178
Corona, CA 92878
(951) 268-6268

County of San Bernardino
N/S: Cedar Avenue
E/W: I-10 Eastbound On/Off Ramps
Weather: Clear

File Name : CSBCE10EAM
Site Code : 06714097
Start Date : 3/11/2014
Page No : 2

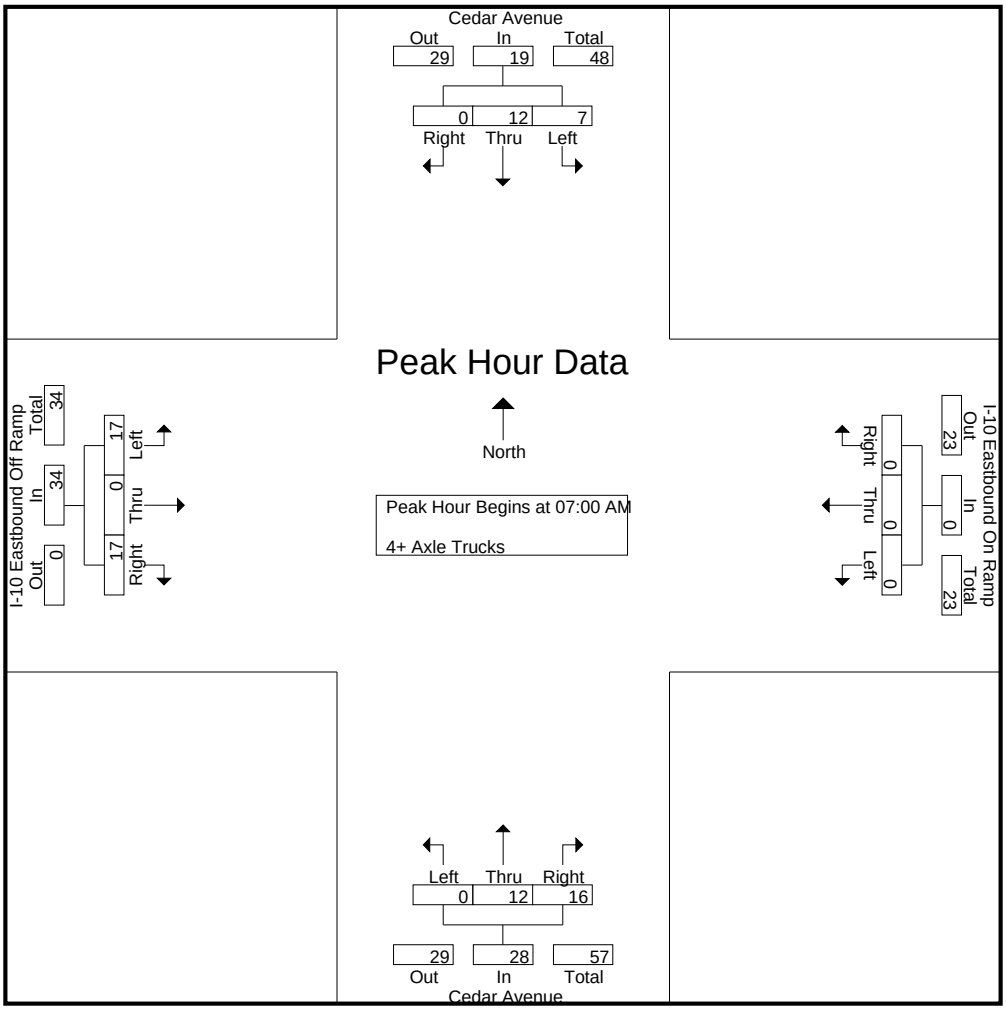


Peak Hour Analysis From 07:00 AM to 07:45 AM - Peak 1 of 1

Peak Hour for Each Approach Begins at:

| | 07:00 AM | | | | 07:00 AM | | | | 07:00 AM | | | | 07:00 AM | | | |
|---|---|---|---|---|---|---|---|---|---|---|---|---|---|---|---|---|
| +0 mins. | **3** | 0 | 0 | 3 | 0 | 0 | 0 | 0 | 0 | 3 | 3 | 6 | **7** | 0 | 3 | 10 |
| +15 mins. | 2 | 3 | 0 | 5 | 0 | 0 | 0 | 0 | 0 | 3 | **6** | **9** | 5 | 0 | 2 | 7 |
| +30 mins. | 0 | **5** | 0 | 5 | 0 | 0 | 0 | 0 | 0 | **5** | 4 | 9 | 2 | 0 | 3 | 5 |
| +45 mins. | 2 | 4 | 0 | **6** | 0 | 0 | 0 | 0 | 0 | 1 | 3 | 4 | 3 | 0 | **9** | **12** |
| Total Volume | 7 | 12 | 0 | 19 | 0 | 0 | 0 | 0 | 0 | 12 | 16 | 28 | 17 | 0 | 17 | 34 |
| % App. Total | 36.8 | 63.2 | 0 | | 0 | 0 | 0 | | 0 | 42.9 | 57.1 | | 50 | 0 | 50 | |
| PHF | .583 | .600 | .000 | .792 | .000 | .000 | .000 | .000 | .000 | .600 | .667 | .778 | .607 | .000 | .472 | .708 |

Counts Unlimited, Inc.
PO Box 1178
Corona, CA 92878
(951) 268-6268

County of San Bernardino
N/S: Cedar Avenue
E/W: I-10 Eastbound On/Off Ramps
Weather: Clear

File Name : CSBCE10EPM
Site Code : 06714097
Start Date : 3/11/2014
Page No : 1

Groups Printed- Passenger Vehicles - Large 2 Axle Vehicles - 3 Axle Vehicles - 4+ Axle Trucks

| | Cedar Avenue Southbound | | | | I-10 Eastbound On Ramp Westbound | | | | Cedar Avenue Northbound | | | | I-10 Eastbound Off Ramp Eastbound | | | | |
|---|---|---|---|---|---|---|---|---|---|---|---|---|---|---|---|---|---|
| Start Time | Left | Thru | Right | App. Total | Left | Thru | Right | App. Total | Left | Thru | Right | App. Total | Left | Thru | Right | App. Total | Int. Total |
| 04:00 PM | 94 | 242 | 0 | 336 | 0 | 0 | 0 | 0 | 0 | 205 | 120 | 325 | 160 | 0 | 45 | 205 | 866 |
| 04:15 PM | 96 | 214 | 0 | 310 | 0 | 0 | 0 | 0 | 0 | 212 | 94 | 306 | 176 | 0 | 42 | 218 | 834 |
| 04:30 PM | 98 | 206 | 0 | 304 | 0 | 0 | 0 | 0 | 0 | 213 | 89 | 302 | 184 | 0 | 42 | 226 | 832 |
| 04:45 PM | 103 | 238 | 0 | 341 | 0 | 0 | 0 | 0 | 0 | 200 | 72 | 272 | 168 | 0 | 37 | 205 | 818 |
| Total | 391 | 900 | 0 | 1291 | 0 | 0 | 0 | 0 | 0 | 830 | 375 | 1205 | 688 | 0 | 166 | 854 | 3350 |
| 05:00 PM | 97 | 260 | 0 | 357 | 0 | 0 | 0 | 0 | 0 | 213 | 71 | 284 | 157 | 0 | 36 | 193 | 834 |
| 05:15 PM | 96 | 271 | 0 | 367 | 0 | 0 | 0 | 0 | 0 | 229 | 74 | 303 | 188 | 0 | 50 | 238 | 908 |
| 05:30 PM | 78 | 265 | 0 | 343 | 0 | 0 | 0 | 0 | 0 | 201 | 71 | 272 | 175 | 2 | 60 | 237 | 852 |
| 05:45 PM | 100 | 229 | 0 | 329 | 0 | 0 | 0 | 0 | 0 | 177 | 68 | 245 | 160 | 2 | 38 | 200 | 774 |
| Total | 371 | 1025 | 0 | 1396 | 0 | 0 | 0 | 0 | 0 | 820 | 284 | 1104 | 680 | 4 | 184 | 868 | 3368 |
| Grand Total | 762 | 1925 | 0 | 2687 | 0 | 0 | 0 | 0 | 0 | 1650 | 659 | 2309 | 1368 | 4 | 350 | 1722 | 6718 |
| Apprch % | 28.4 | 71.6 | 0 | | 0 | 0 | 0 | | 0 | 71.5 | 28.5 | | 79.4 | 0.2 | 20.3 | | |
| Total % | 11.3 | 28.7 | 0 | 40 | 0 | 0 | 0 | 0 | 0 | 24.6 | 9.8 | 34.4 | 20.4 | 0.1 | 5.2 | 25.6 | |
| Passenger Vehicles | 746 | 1851 | 0 | 2597 | 0 | 0 | 0 | 0 | 0 | 1584 | 633 | 2217 | 1321 | 4 | 302 | 1627 | 6441 |
| % Passenger Vehicles | 97.9 | 96.2 | 0 | 96.7 | 0 | 0 | 0 | 0 | 0 | 96 | 96.1 | 96 | 96.6 | 100 | 86.3 | 94.5 | 95.9 |
| Large 2 Axle Vehicles | 5 | 30 | 0 | 35 | 0 | 0 | 0 | 0 | 0 | 32 | 10 | 42 | 21 | 0 | 16 | 37 | 114 |
| % Large 2 Axle Vehicles | 0.7 | 1.6 | 0 | 1.3 | 0 | 0 | 0 | 0 | 0 | 1.9 | 1.5 | 1.8 | 1.5 | 0 | 4.6 | 2.1 | 1.7 |
| 3 Axle Vehicles | 3 | 19 | 0 | 22 | 0 | 0 | 0 | 0 | 0 | 11 | 0 | 11 | 12 | 0 | 6 | 18 | 51 |
| % 3 Axle Vehicles | 0.4 | 1 | 0 | 0.8 | 0 | 0 | 0 | 0 | 0 | 0.7 | 0 | 0.5 | 0.9 | 0 | 1.7 | 1 | 0.8 |
| 4+ Axle Trucks | 8 | 25 | 0 | 33 | 0 | 0 | 0 | 0 | 0 | 23 | 16 | 39 | 14 | 0 | 26 | 40 | 112 |
| % 4+ Axle Trucks | 1 | 1.3 | 0 | 1.2 | 0 | 0 | 0 | 0 | 0 | 1.4 | 2.4 | 1.7 | 1 | 0 | 7.4 | 2.3 | 1.7 |

| | Cedar Avenue Southbound | | | | I-10 Eastbound On Ramp Westbound | | | | Cedar Avenue Northbound | | | | I-10 Eastbound Off Ramp Eastbound | | | | |
|---|---|---|---|---|---|---|---|---|---|---|---|---|---|---|---|---|---|
| Start Time | Left | Thru | Right | App. Total | Left | Thru | Right | App. Total | Left | Thru | Right | App. Total | Left | Thru | Right | App. Total | Int. Total |
| Peak Hour Analysis From 04:00 PM to 05:45 PM - Peak 1 of 1 | | | | | | | | | | | | | | | | | |
| Peak Hour for Entire Intersection Begins at 04:45 PM | | | | | | | | | | | | | | | | | |
| 04:45 PM | **103** | 238 | 0 | 341 | 0 | 0 | 0 | 0 | 0 | 200 | 72 | 272 | 168 | 0 | 37 | 205 | 818 |
| 05:00 PM | 97 | 260 | 0 | 357 | 0 | 0 | 0 | 0 | 0 | 213 | 71 | 284 | 157 | 0 | 36 | 193 | 834 |
| 05:15 PM | 96 | **271** | 0 | **367** | 0 | 0 | 0 | 0 | 0 | **229** | **74** | **303** | **188** | 0 | 50 | **238** | **908** |
| 05:30 PM | 78 | 265 | 0 | 343 | 0 | 0 | 0 | 0 | 0 | 201 | 71 | 272 | 175 | **2** | **60** | 237 | 852 |
| Total Volume | 374 | 1034 | 0 | 1408 | 0 | 0 | 0 | 0 | 0 | 843 | 288 | 1131 | 688 | 2 | 183 | 873 | 3412 |
| % App. Total | 26.6 | 73.4 | 0 | | 0 | 0 | 0 | | 0 | 74.5 | 25.5 | | 78.8 | 0.2 | 21 | | |
| PHF | .908 | .954 | .000 | .959 | .000 | .000 | .000 | .000 | .000 | .920 | .973 | .933 | .915 | .250 | .763 | .917 | .939 |

Counts Unlimited, Inc.
PO Box 1178
Corona, CA 92878
(951) 268-6268

County of San Bernardino
N/S: Cedar Avenue
E/W: I-10 Eastbound On/Off Ramps
Weather: Clear

File Name : CSBCE10EPM
Site Code : 06714097
Start Date : 3/11/2014
Page No : 2

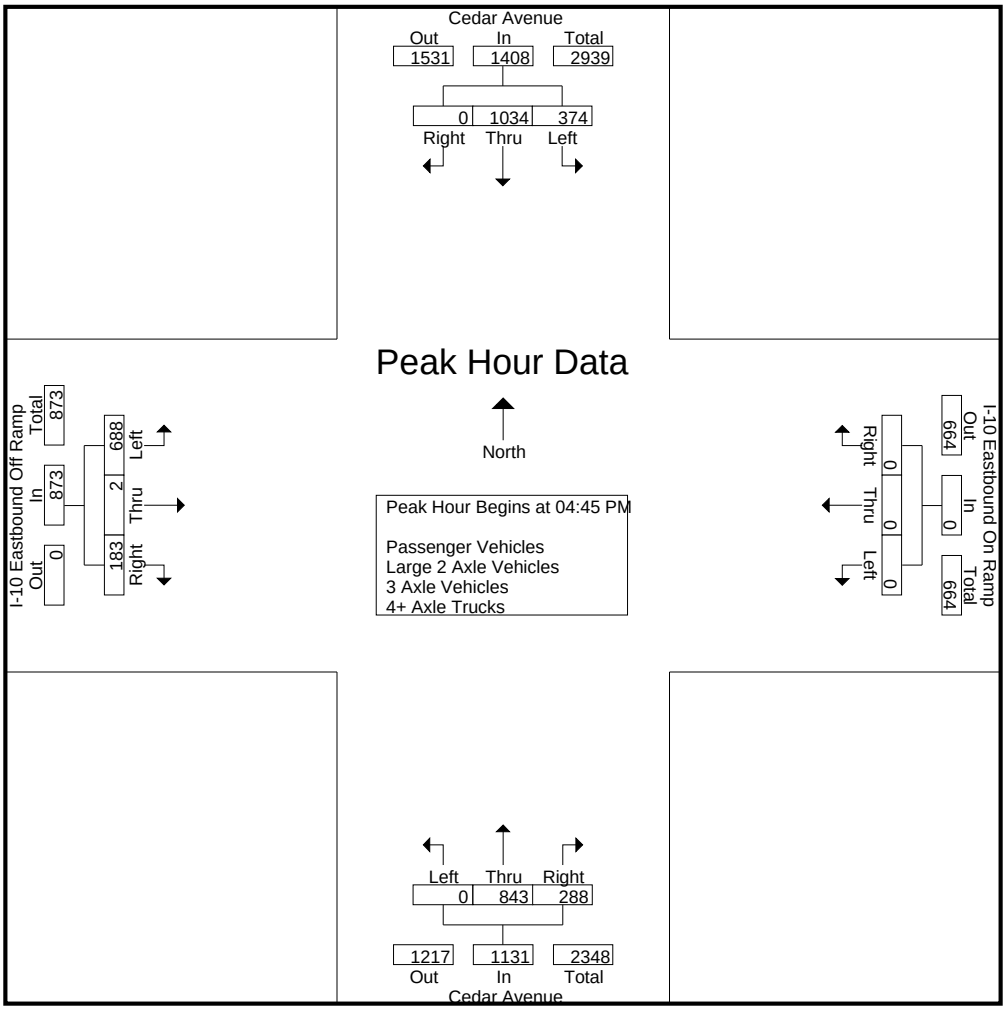


Peak Hour Analysis From 04:00 PM to 05:45 PM - Peak 1 of 1

Peak Hour for Each Approach Begins at:

| | 04:45 PM | | | | 04:00 PM | | | | 04:00 PM | | | | 04:45 PM | | | |
|---|---|---|---|---|---|---|---|---|---|---|---|---|---|---|---|---|
| +0 mins. | **103** | 238 | 0 | 341 | 0 | 0 | 0 | 0 | 0 | 205 | **120** | **325** | 168 | 0 | 37 | 205 |
| +15 mins. | 97 | 260 | 0 | 357 | 0 | 0 | 0 | 0 | 0 | 212 | 94 | 306 | 157 | 0 | 36 | 193 |
| +30 mins. | 96 | **271** | 0 | **367** | 0 | 0 | 0 | 0 | 0 | **213** | 89 | 302 | **188** | 0 | 50 | **238** |
| +45 mins. | 78 | 265 | 0 | 343 | 0 | 0 | 0 | 0 | 0 | 200 | 72 | 272 | 175 | **2** | **60** | 237 |
| Total Volume | 374 | 1034 | 0 | 1408 | 0 | 0 | 0 | 0 | 0 | 830 | 375 | 1205 | 688 | 2 | 183 | 873 |
| % App. Total | 26.6 | 73.4 | 0 | | 0 | 0 | 0 | | 0 | 68.9 | 31.1 | | 78.8 | 0.2 | 21 | |
| PHF | .908 | .954 | .000 | .959 | .000 | .000 | .000 | .000 | .000 | .974 | .781 | .927 | .915 | .250 | .763 | .917 |

Counts Unlimited, Inc.
PO Box 1178
Corona, CA 92878
(951) 268-6268

County of San Bernardino
N/S: Cedar Avenue
E/W: I-10 Eastbound On/Off Ramps
Weather: Clear

File Name : CSBCE10EPM
Site Code : 06714097
Start Date : 3/11/2014
Page No : 1

Groups Printed- Passenger Vehicles

| | Cedar Avenue Southbound | | | | I-10 Eastbound On Ramp Westbound | | | | Cedar Avenue Northbound | | | | I-10 Eastbound Off Ramp Eastbound | | | | |
|---|---|---|---|---|---|---|---|---|---|---|---|---|---|---|---|---|---|
| Start Time | Left | Thru | Right | App. Total | Left | Thru | Right | App. Total | Left | Thru | Right | App. Total | Left | Thru | Right | App. Total | Int. Total |
| 04:00 PM | 90 | 233 | 0 | 323 | 0 | 0 | 0 | 0 | 0 | 193 | 115 | 308 | 157 | 0 | 37 | 194 | 825 |
| 04:15 PM | 94 | 205 | 0 | 299 | 0 | 0 | 0 | 0 | 0 | 203 | 93 | 296 | 165 | 0 | 37 | 202 | 797 |
| 04:30 PM | 95 | 197 | 0 | 292 | 0 | 0 | 0 | 0 | 0 | 206 | 84 | 290 | 179 | 0 | 36 | 215 | 797 |
| 04:45 PM | 101 | 229 | 0 | 330 | 0 | 0 | 0 | 0 | 0 | 192 | 67 | 259 | 163 | 0 | 32 | 195 | 784 |
| Total | 380 | 864 | 0 | 1244 | 0 | 0 | 0 | 0 | 0 | 794 | 359 | 1153 | 664 | 0 | 142 | 806 | 3203 |
| 05:00 PM | 95 | 248 | 0 | 343 | 0 | 0 | 0 | 0 | 0 | 204 | 67 | 271 | 151 | 0 | 29 | 180 | 794 |
| 05:15 PM | 95 | 266 | 0 | 361 | 0 | 0 | 0 | 0 | 0 | 223 | 73 | 296 | 185 | 0 | 46 | 231 | 888 |
| 05:30 PM | 78 | 255 | 0 | 333 | 0 | 0 | 0 | 0 | 0 | 195 | 68 | 263 | 168 | 2 | 49 | 219 | 815 |
| 05:45 PM | 98 | 218 | 0 | 316 | 0 | 0 | 0 | 0 | 0 | 168 | 66 | 234 | 153 | 2 | 36 | 191 | 741 |
| Total | 366 | 987 | 0 | 1353 | 0 | 0 | 0 | 0 | 0 | 790 | 274 | 1064 | 657 | 4 | 160 | 821 | 3238 |
| Grand Total | 746 | 1851 | 0 | 2597 | 0 | 0 | 0 | 0 | 0 | 1584 | 633 | 2217 | 1321 | 4 | 302 | 1627 | 6441 |
| Apprch % | 28.7 | 71.3 | 0 | | 0 | 0 | 0 | | 0 | 71.4 | 28.6 | | 81.2 | 0.2 | 18.6 | | |
| Total % | 11.6 | 28.7 | 0 | 40.3 | 0 | 0 | 0 | 0 | 0 | 24.6 | 9.8 | 34.4 | 20.5 | 0.1 | 4.7 | 25.3 | |

| | Cedar Avenue Southbound | | | | I-10 Eastbound On Ramp Westbound | | | | Cedar Avenue Northbound | | | | I-10 Eastbound Off Ramp Eastbound | | | | |
|---|---|---|---|---|---|---|---|---|---|---|---|---|---|---|---|---|---|
| Start Time | Left | Thru | Right | App. Total | Left | Thru | Right | App. Total | Left | Thru | Right | App. Total | Left | Thru | Right | App. Total | Int. Total |
| Peak Hour Analysis From 04:45 PM to 05:30 PM - Peak 1 of 1 | | | | | | | | | | | | | | | | | |
| Peak Hour for Entire Intersection Begins at 04:45 PM | | | | | | | | | | | | | | | | | |
| 04:45 PM | **101** | 229 | 0 | 330 | 0 | 0 | 0 | 0 | 0 | 192 | 67 | 259 | 163 | 0 | 32 | 195 | 784 |
| 05:00 PM | 95 | 248 | 0 | 343 | 0 | 0 | 0 | 0 | 0 | 204 | 67 | 271 | 151 | 0 | 29 | 180 | 794 |
| 05:15 PM | 95 | **266** | 0 | **361** | 0 | 0 | 0 | 0 | 0 | **223** | **73** | **296** | **185** | 0 | 46 | **231** | **888** |
| 05:30 PM | 78 | 255 | 0 | 333 | 0 | 0 | 0 | 0 | 0 | 195 | 68 | 263 | 168 | **2** | **49** | 219 | 815 |
| Total Volume | 369 | 998 | 0 | 1367 | 0 | 0 | 0 | 0 | 0 | 814 | 275 | 1089 | 667 | 2 | 156 | 825 | 3281 |
| % App. Total | 27 | 73 | 0 | | 0 | 0 | 0 | | 0 | 74.7 | 25.3 | | 80.8 | 0.2 | 18.9 | | |
| PHF | .913 | .938 | .000 | .947 | .000 | .000 | .000 | .000 | .000 | .913 | .942 | .920 | .901 | .250 | .796 | .893 | .924 |

Counts Unlimited, Inc.
PO Box 1178
Corona, CA 92878
(951) 268-6268

County of San Bernardino
N/S: Cedar Avenue
E/W: I-10 Eastbound On/Off Ramps
Weather: Clear

File Name : CSBCE10EPM
Site Code : 06714097
Start Date : 3/11/2014
Page No : 2

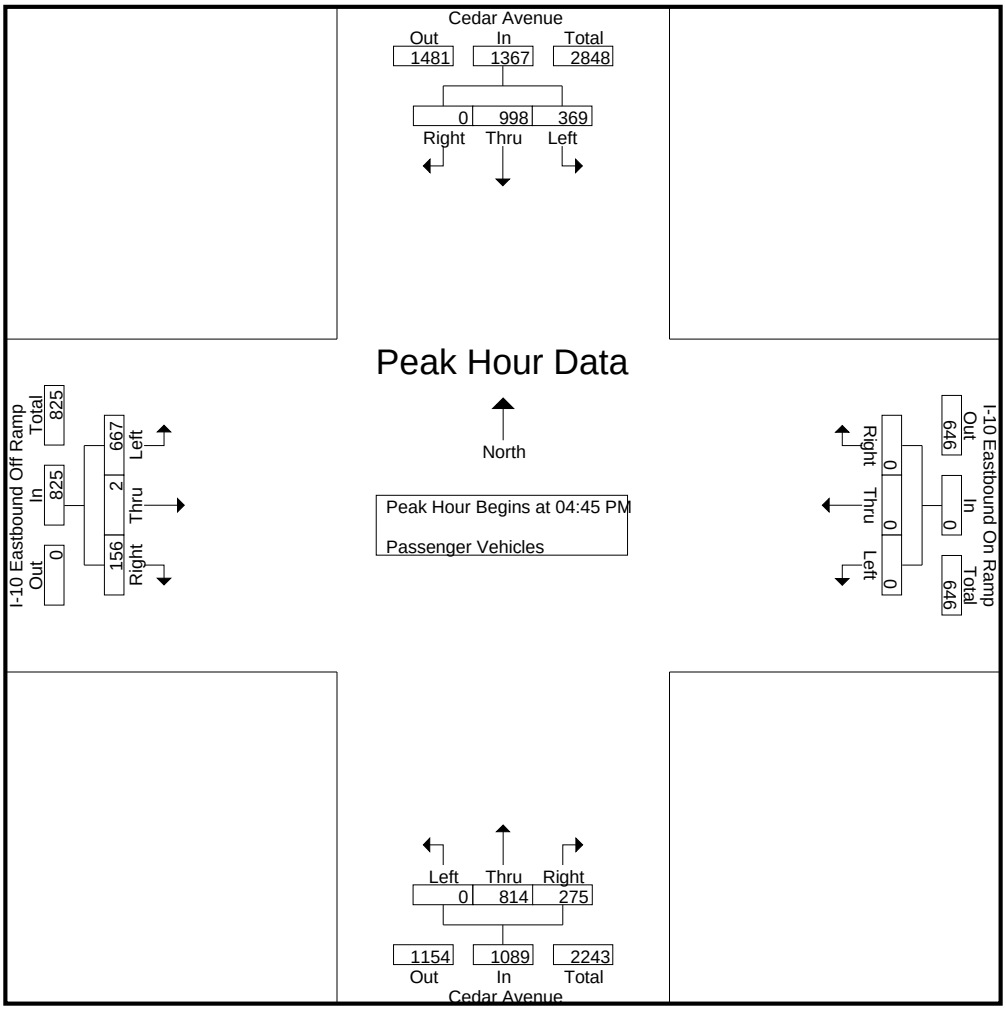


Peak Hour Analysis From 04:45 PM to 05:30 PM - Peak 1 of 1

Peak Hour for Each Approach Begins at:

| | 04:45 PM | | | | 04:45 PM | | | | 04:45 PM | | | | 04:45 PM | | | |
|---|---|---|---|---|---|---|---|---|---|---|---|---|---|---|---|---|
| +0 mins. | **101** | 229 | 0 | 330 | 0 | 0 | 0 | 0 | 0 | 192 | 67 | 259 | 163 | 0 | 32 | 195 |
| +15 mins. | 95 | 248 | 0 | 343 | 0 | 0 | 0 | 0 | 0 | 204 | 67 | 271 | 151 | 0 | 29 | 180 |
| +30 mins. | 95 | **266** | 0 | **361** | 0 | 0 | 0 | 0 | 0 | **223** | **73** | **296** | **185** | 0 | 46 | **231** |
| +45 mins. | 78 | 255 | 0 | 333 | 0 | 0 | 0 | 0 | 0 | 195 | 68 | 263 | 168 | **2** | **49** | 219 |
| Total Volume | 369 | 998 | 0 | 1367 | 0 | 0 | 0 | 0 | 0 | 814 | 275 | 1089 | 667 | 2 | 156 | 825 |
| % App. Total | 27 | 73 | 0 | | 0 | 0 | 0 | | 0 | 74.7 | 25.3 | | 80.8 | 0.2 | 18.9 | |
| PHF | .913 | .938 | .000 | .947 | .000 | .000 | .000 | .000 | .000 | .913 | .942 | .920 | .901 | .250 | .796 | .893 |

Counts Unlimited, Inc.
PO Box 1178
Corona, CA 92878
(951) 268-6268

County of San Bernardino
N/S: Cedar Avenue
E/W: I-10 Eastbound On/Off Ramps
Weather: Clear

File Name : CSBCE10EPM
Site Code : 06714097
Start Date : 3/11/2014
Page No : 1

Groups Printed- Large 2 Axle Vehicles

| | Cedar Avenue Southbound | | | | I-10 Eastbound On Ramp Westbound | | | | Cedar Avenue Northbound | | | | I-10 Eastbound Off Ramp Eastbound | | | | |
|---|---|---|---|---|---|---|---|---|---|---|---|---|---|---|---|---|---|
| Start Time | Left | Thru | Right | App. Total | Left | Thru | Right | App. Total | Left | Thru | Right | App. Total | Left | Thru | Right | App. Total | Int. Total |
| 04:00 PM | 1 | 6 | 0 | 7 | 0 | 0 | 0 | 0 | 0 | 4 | 2 | 6 | 2 | 0 | 3 | 5 | 18 |
| 04:15 PM | 1 | 3 | 0 | 4 | 0 | 0 | 0 | 0 | 0 | 6 | 1 | 7 | 7 | 0 | 4 | 11 | 22 |
| 04:30 PM | 2 | 5 | 0 | 7 | 0 | 0 | 0 | 0 | 0 | 2 | 0 | 2 | 1 | 0 | 3 | 4 | 13 |
| 04:45 PM | 0 | 4 | 0 | 4 | 0 | 0 | 0 | 0 | 0 | 3 | 2 | 5 | 0 | 0 | 1 | 1 | 10 |
| Total | 4 | 18 | 0 | 22 | 0 | 0 | 0 | 0 | 0 | 15 | 5 | 20 | 10 | 0 | 11 | 21 | 63 |
| 05:00 PM | 0 | 2 | 0 | 2 | 0 | 0 | 0 | 0 | 0 | 5 | 3 | 8 | 3 | 0 | 1 | 4 | 14 |
| 05:15 PM | 0 | 1 | 0 | 1 | 0 | 0 | 0 | 0 | 0 | 3 | 0 | 3 | 3 | 0 | 2 | 5 | 9 |
| 05:30 PM | 0 | 5 | 0 | 5 | 0 | 0 | 0 | 0 | 0 | 3 | 0 | 3 | 2 | 0 | 2 | 4 | 12 |
| 05:45 PM | 1 | 4 | 0 | 5 | 0 | 0 | 0 | 0 | 0 | 6 | 2 | 8 | 3 | 0 | 0 | 3 | 16 |
| Total | 1 | 12 | 0 | 13 | 0 | 0 | 0 | 0 | 0 | 17 | 5 | 22 | 11 | 0 | 5 | 16 | 51 |
| Grand Total | 5 | 30 | 0 | 35 | 0 | 0 | 0 | 0 | 0 | 32 | 10 | 42 | 21 | 0 | 16 | 37 | 114 |
| Apprch % | 14.3 | 85.7 | 0 | | 0 | 0 | 0 | | 0 | 76.2 | 23.8 | | 56.8 | 0 | 43.2 | | |
| Total % | 4.4 | 26.3 | 0 | 30.7 | 0 | 0 | 0 | 0 | 0 | 28.1 | 8.8 | 36.8 | 18.4 | 0 | 14 | 32.5 | |

| | Cedar Avenue Southbound | | | | I-10 Eastbound On Ramp Westbound | | | | Cedar Avenue Northbound | | | | I-10 Eastbound Off Ramp Eastbound | | | | |
|---|---|---|---|---|---|---|---|---|---|---|---|---|---|---|---|---|---|
| Start Time | Left | Thru | Right | App. Total | Left | Thru | Right | App. Total | Left | Thru | Right | App. Total | Left | Thru | Right | App. Total | Int. Total |
| Peak Hour Analysis From 04:45 PM to 05:30 PM - Peak 1 of 1 | | | | | | | | | | | | | | | | | |
| Peak Hour for Entire Intersection Begins at 04:45 PM | | | | | | | | | | | | | | | | | |
| 04:45 PM | 0 | 4 | 0 | 4 | 0 | 0 | 0 | 0 | 0 | 3 | 2 | 5 | 0 | 0 | 1 | 1 | 10 |
| 05:00 PM | 0 | 2 | 0 | 2 | 0 | 0 | 0 | 0 | 0 | **5** | **3** | **8** | **3** | 0 | 1 | 4 | **14** |
| 05:15 PM | 0 | 1 | 0 | 1 | 0 | 0 | 0 | 0 | 0 | 3 | 0 | 3 | 3 | 0 | **2** | **5** | 9 |
| 05:30 PM | 0 | **5** | 0 | **5** | 0 | 0 | 0 | 0 | 0 | 3 | 0 | 3 | 2 | 0 | 2 | 4 | 12 |
| Total Volume | 0 | 12 | 0 | 12 | 0 | 0 | 0 | 0 | 0 | 14 | 5 | 19 | 8 | 0 | 6 | 14 | 45 |
| % App. Total | 0 | 100 | 0 | | 0 | 0 | 0 | | 0 | 73.7 | 26.3 | | 57.1 | 0 | 42.9 | | |
| PHF | .000 | .600 | .000 | .600 | .000 | .000 | .000 | .000 | .000 | .700 | .417 | .594 | .667 | .000 | .750 | .700 | .804 |

Counts Unlimited, Inc.
PO Box 1178
Corona, CA 92878
(951) 268-6268

County of San Bernardino
N/S: Cedar Avenue
E/W: I-10 Eastbound On/Off Ramps
Weather: Clear

File Name : CSBCE10EPM
Site Code : 06714097
Start Date : 3/11/2014
Page No : 2

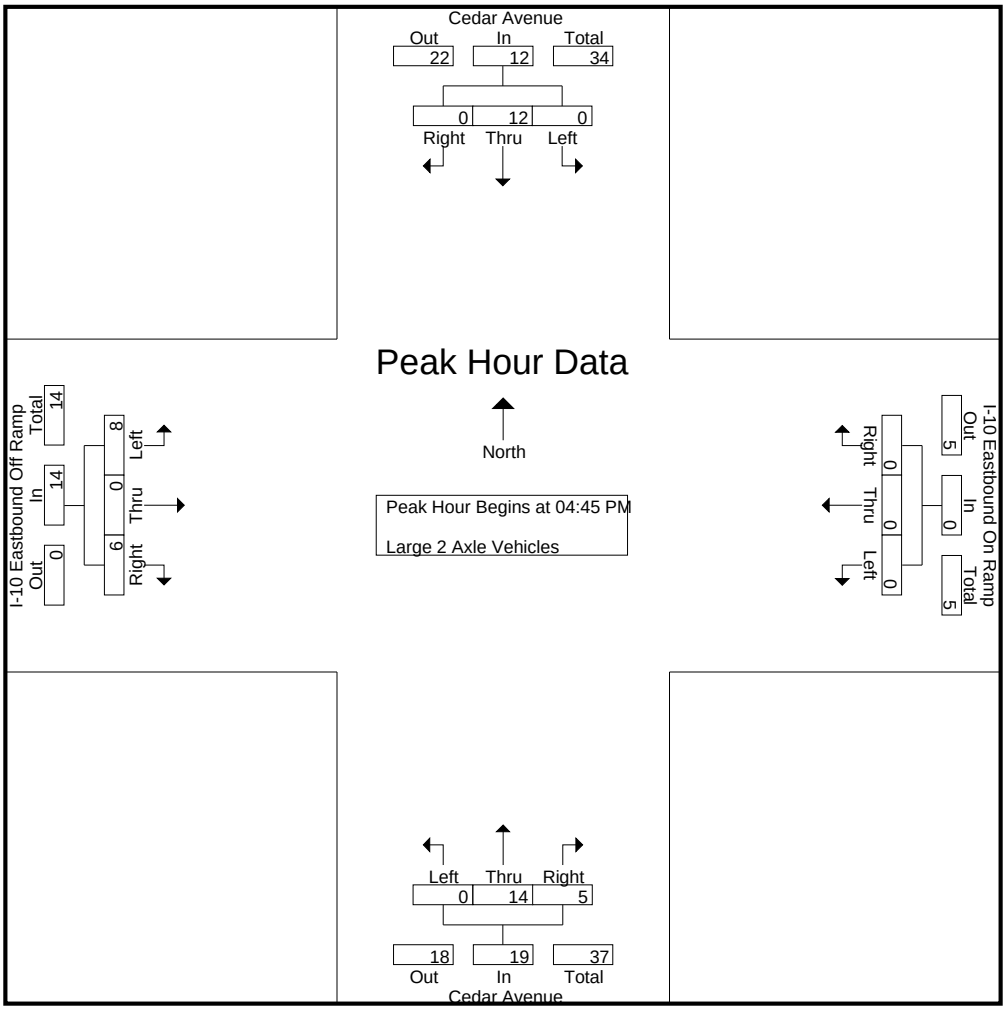


Peak Hour Analysis From 04:45 PM to 05:30 PM - Peak 1 of 1

Peak Hour for Each Approach Begins at:

| | 04:45 PM | | | | 04:45 PM | | | | 04:45 PM | | | | 04:45 PM | | | |
|---|---|---|---|---|---|---|---|---|---|---|---|---|---|---|---|---|
| +0 mins. | 0 | 4 | 0 | 4 | 0 | 0 | 0 | 0 | 0 | 3 | 2 | 5 | 0 | 0 | 1 | 1 |
| +15 mins. | 0 | 2 | 0 | 2 | 0 | 0 | 0 | 0 | 0 | **5** | **3** | **8** | **3** | 0 | 1 | 4 |
| +30 mins. | 0 | 1 | 0 | 1 | 0 | 0 | 0 | 0 | 0 | 3 | 0 | 3 | 3 | 0 | **2** | **5** |
| +45 mins. | 0 | **5** | 0 | **5** | 0 | 0 | 0 | 0 | 0 | 3 | 0 | 3 | 2 | 0 | 2 | 4 |
| Total Volume | 0 | 12 | 0 | 12 | 0 | 0 | 0 | 0 | 0 | 14 | 5 | 19 | 8 | 0 | 6 | 14 |
| % App. Total | 0 | 100 | 0 | | 0 | 0 | 0 | | 0 | 73.7 | 26.3 | | 57.1 | 0 | 42.9 | |
| PHF | .000 | .600 | .000 | .600 | .000 | .000 | .000 | .000 | .000 | .700 | .417 | .594 | .667 | .000 | .750 | .700 |

Counts Unlimited, Inc.
PO Box 1178
Corona, CA 92878
(951) 268-6268

County of San Bernardino
N/S: Cedar Avenue
E/W: I-10 Eastbound On/Off Ramps
Weather: Clear

File Name : CSBCE10EPM
Site Code : 06714097
Start Date : 3/11/2014
Page No : 1

Groups Printed- 3 Axle Vehicles

| | Cedar Avenue Southbound | | | | I-10 Eastbound On Ramp Westbound | | | | Cedar Avenue Northbound | | | | I-10 Eastbound Off Ramp Eastbound | | | | |
|---|---|---|---|---|---|---|---|---|---|---|---|---|---|---|---|---|---|
| Start Time | Left | Thru | Right | App. Total | Left | Thru | Right | App. Total | Left | Thru | Right | App. Total | Left | Thru | Right | App. Total | Int. Total |
| 04:00 PM | 0 | 1 | 0 | 1 | 0 | 0 | 0 | 0 | 0 | 2 | 0 | 2 | 0 | 0 | 0 | 0 | 3 |
| 04:15 PM | 1 | 1 | 0 | 2 | 0 | 0 | 0 | 0 | 0 | 1 | 0 | 1 | 1 | 0 | 0 | 1 | 4 |
| 04:30 PM | 0 | 2 | 0 | 2 | 0 | 0 | 0 | 0 | 0 | 4 | 0 | 4 | 3 | 0 | 1 | 4 | 10 |
| 04:45 PM | 0 | 3 | 0 | 3 | 0 | 0 | 0 | 0 | 0 | 1 | 0 | 1 | 4 | 0 | 1 | 5 | 9 |
| Total | 1 | 7 | 0 | 8 | 0 | 0 | 0 | 0 | 0 | 8 | 0 | 8 | 8 | 0 | 2 | 10 | 26 |
| 05:00 PM | 0 | 6 | 0 | 6 | 0 | 0 | 0 | 0 | 0 | 1 | 0 | 1 | 1 | 0 | 1 | 2 | 9 |
| 05:15 PM | 1 | 1 | 0 | 2 | 0 | 0 | 0 | 0 | 0 | 1 | 0 | 1 | 0 | 0 | 0 | 0 | 3 |
| 05:30 PM | 0 | 2 | 0 | 2 | 0 | 0 | 0 | 0 | 0 | 0 | 0 | 0 | 2 | 0 | 1 | 3 | 5 |
| 05:45 PM | 1 | 3 | 0 | 4 | 0 | 0 | 0 | 0 | 0 | 1 | 0 | 1 | 1 | 0 | 2 | 3 | 8 |
| Total | 2 | 12 | 0 | 14 | 0 | 0 | 0 | 0 | 0 | 3 | 0 | 3 | 4 | 0 | 4 | 8 | 25 |
| Grand Total | 3 | 19 | 0 | 22 | 0 | 0 | 0 | 0 | 0 | 11 | 0 | 11 | 12 | 0 | 6 | 18 | 51 |
| Apprch % | 13.6 | 86.4 | 0 | | 0 | 0 | 0 | | 0 | 100 | 0 | | 66.7 | 0 | 33.3 | | |
| Total % | 5.9 | 37.3 | 0 | 43.1 | 0 | 0 | 0 | 0 | 0 | 21.6 | 0 | 21.6 | 23.5 | 0 | 11.8 | 35.3 | |

| | Cedar Avenue Southbound | | | | I-10 Eastbound On Ramp Westbound | | | | Cedar Avenue Northbound | | | | I-10 Eastbound Off Ramp Eastbound | | | | |
|---|---|---|---|---|---|---|---|---|---|---|---|---|---|---|---|---|---|
| Start Time | Left | Thru | Right | App. Total | Left | Thru | Right | App. Total | Left | Thru | Right | App. Total | Left | Thru | Right | App. Total | Int. Total |
| Peak Hour Analysis From 04:45 PM to 05:30 PM - Peak 1 of 1 | | | | | | | | | | | | | | | | | |
| Peak Hour for Entire Intersection Begins at 04:45 PM | | | | | | | | | | | | | | | | | |
| 04:45 PM | 0 | 3 | 0 | 3 | 0 | 0 | 0 | 0 | 0 | **1** | 0 | **1** | **4** | 0 | **1** | **5** | **9** |
| 05:00 PM | 0 | **6** | 0 | **6** | 0 | 0 | 0 | 0 | 0 | 1 | 0 | 1 | 1 | 0 | 1 | 2 | 9 |
| 05:15 PM | **1** | 1 | 0 | 2 | 0 | 0 | 0 | 0 | 0 | 1 | 0 | 1 | 0 | 0 | 0 | 0 | 3 |
| 05:30 PM | 0 | 2 | 0 | 2 | 0 | 0 | 0 | 0 | 0 | 0 | 0 | 0 | 2 | 0 | 1 | 3 | 5 |
| Total Volume | 1 | 12 | 0 | 13 | 0 | 0 | 0 | 0 | 0 | 3 | 0 | 3 | 7 | 0 | 3 | 10 | 26 |
| % App. Total | 7.7 | 92.3 | 0 | | 0 | 0 | 0 | | 0 | 100 | 0 | | 70 | 0 | 30 | | |
| PHF | .250 | .500 | .000 | .542 | .000 | .000 | .000 | .000 | .000 | .750 | .000 | .750 | .438 | .000 | .750 | .500 | .722 |

Counts Unlimited, Inc.
PO Box 1178
Corona, CA 92878
(951) 268-6268

County of San Bernardino
N/S: Cedar Avenue
E/W: I-10 Eastbound On/Off Ramps
Weather: Clear

File Name : CSBCE10EPM
Site Code : 06714097
Start Date : 3/11/2014
Page No : 2

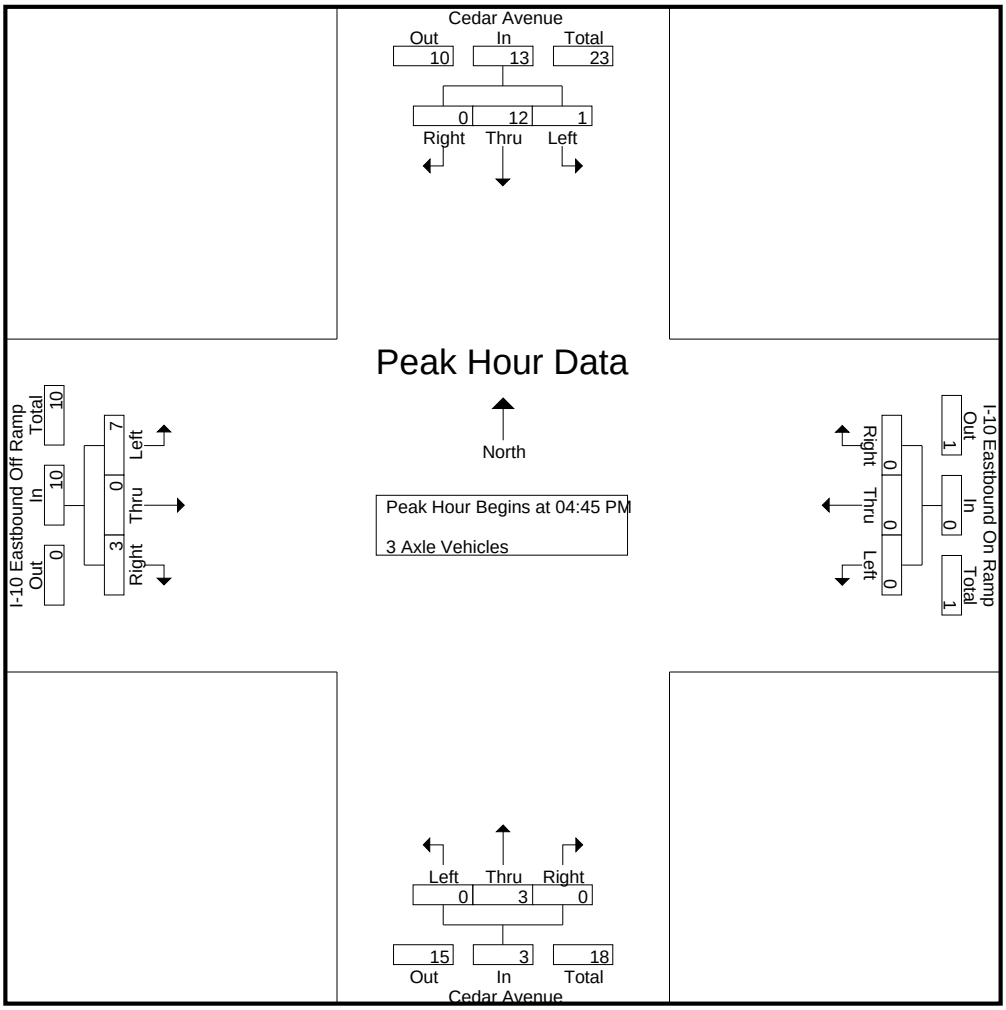


Peak Hour Analysis From 04:45 PM to 05:30 PM - Peak 1 of 1

Peak Hour for Each Approach Begins at:

| | 04:45 PM | | | | 04:45 PM | | | | 04:45 PM | | | | 04:45 PM | | | |
|---|---|---|---|---|---|---|---|---|---|---|---|---|---|---|---|---|
| +0 mins. | 0 | 3 | 0 | 3 | 0 | 0 | 0 | 0 | 0 | **1** | 0 | **1** | **4** | 0 | **1** | **5** |
| +15 mins. | 0 | **6** | 0 | **6** | 0 | 0 | 0 | 0 | 0 | 1 | 0 | 1 | 1 | 0 | 1 | 2 |
| +30 mins. | **1** | 1 | 0 | 2 | 0 | 0 | 0 | 0 | 0 | 1 | 0 | 1 | 0 | 0 | 0 | 0 |
| +45 mins. | 0 | 2 | 0 | 2 | 0 | 0 | 0 | 0 | 0 | 0 | 0 | 0 | 2 | 0 | 1 | 3 |
| Total Volume | 1 | 12 | 0 | 13 | 0 | 0 | 0 | 0 | 0 | 3 | 0 | 3 | 7 | 0 | 3 | 10 |
| % App. Total | 7.7 | 92.3 | 0 | | 0 | 0 | 0 | | 0 | 100 | 0 | | 70 | 0 | 30 | |
| PHF | .250 | .500 | .000 | .542 | .000 | .000 | .000 | .000 | .000 | .750 | .000 | .750 | .438 | .000 | .750 | .500 |

Counts Unlimited, Inc.
PO Box 1178
Corona, CA 92878
(951) 268-6268

County of San Bernardino
N/S: Cedar Avenue
E/W: I-10 Eastbound On/Off Ramps
Weather: Clear

File Name : CSBCE10EPM
Site Code : 06714097
Start Date : 3/11/2014
Page No : 1

Groups Printed- 4+ Axle Trucks

| | Cedar Avenue Southbound | | | | I-10 Eastbound On Ramp Westbound | | | | Cedar Avenue Northbound | | | | I-10 Eastbound Off Ramp Eastbound | | | | |
|---|---|---|---|---|---|---|---|---|---|---|---|---|---|---|---|---|---|
| Start Time | Left | Thru | Right | App. Total | Left | Thru | Right | App. Total | Left | Thru | Right | App. Total | Left | Thru | Right | App. Total | Int. Total |
| 04:00 PM | 3 | 2 | 0 | 5 | 0 | 0 | 0 | 0 | 0 | 6 | 3 | 9 | 1 | 0 | 5 | 6 | 20 |
| 04:15 PM | 0 | 5 | 0 | 5 | 0 | 0 | 0 | 0 | 0 | 2 | 0 | 2 | 3 | 0 | 1 | 4 | 11 |
| 04:30 PM | 1 | 2 | 0 | 3 | 0 | 0 | 0 | 0 | 0 | 1 | 5 | 6 | 1 | 0 | 2 | 3 | 12 |
| 04:45 PM | 2 | 2 | 0 | 4 | 0 | 0 | 0 | 0 | 0 | 4 | 3 | 7 | 1 | 0 | 3 | 4 | 15 |
| Total | 6 | 11 | 0 | 17 | 0 | 0 | 0 | 0 | 0 | 13 | 11 | 24 | 6 | 0 | 11 | 17 | 58 |
| 05:00 PM | 2 | 4 | 0 | 6 | 0 | 0 | 0 | 0 | 0 | 3 | 1 | 4 | 2 | 0 | 5 | 7 | 17 |
| 05:15 PM | 0 | 3 | 0 | 3 | 0 | 0 | 0 | 0 | 0 | 2 | 1 | 3 | 0 | 0 | 2 | 2 | 8 |
| 05:30 PM | 0 | 3 | 0 | 3 | 0 | 0 | 0 | 0 | 0 | 3 | 3 | 6 | 3 | 0 | 8 | 11 | 20 |
| 05:45 PM | 0 | 4 | 0 | 4 | 0 | 0 | 0 | 0 | 0 | 2 | 0 | 2 | 3 | 0 | 0 | 3 | 9 |
| Total | 2 | 14 | 0 | 16 | 0 | 0 | 0 | 0 | 0 | 10 | 5 | 15 | 8 | 0 | 15 | 23 | 54 |
| Grand Total | 8 | 25 | 0 | 33 | 0 | 0 | 0 | 0 | 0 | 23 | 16 | 39 | 14 | 0 | 26 | 40 | 112 |
| Apprch % | 24.2 | 75.8 | 0 | | 0 | 0 | 0 | | 0 | 59 | 41 | | 35 | 0 | 65 | | |
| Total % | 7.1 | 22.3 | 0 | 29.5 | 0 | 0 | 0 | 0 | 0 | 20.5 | 14.3 | 34.8 | 12.5 | 0 | 23.2 | 35.7 | |

| | Cedar Avenue Southbound | | | | I-10 Eastbound On Ramp Westbound | | | | Cedar Avenue Northbound | | | | I-10 Eastbound Off Ramp Eastbound | | | | |
|---|---|---|---|---|---|---|---|---|---|---|---|---|---|---|---|---|---|
| Start Time | Left | Thru | Right | App. Total | Left | Thru | Right | App. Total | Left | Thru | Right | App. Total | Left | Thru | Right | App. Total | Int. Total |
| Peak Hour Analysis From 04:45 PM to 05:30 PM - Peak 1 of 1 | | | | | | | | | | | | | | | | | |
| Peak Hour for Entire Intersection Begins at 04:45 PM | | | | | | | | | | | | | | | | | |
| 04:45 PM | **2** | 2 | 0 | 4 | 0 | 0 | 0 | 0 | 0 | **4** | **3** | **7** | 1 | 0 | 3 | 4 | 15 |
| 05:00 PM | 2 | **4** | 0 | **6** | 0 | 0 | 0 | 0 | 0 | 3 | 1 | 4 | 2 | 0 | 5 | 7 | 17 |
| 05:15 PM | 0 | 3 | 0 | 3 | 0 | 0 | 0 | 0 | 0 | 2 | 1 | 3 | 0 | 0 | 2 | 2 | 8 |
| 05:30 PM | 0 | 3 | 0 | 3 | 0 | 0 | 0 | 0 | 0 | 3 | 3 | 6 | **3** | 0 | **8** | **11** | **20** |
| Total Volume | 4 | 12 | 0 | 16 | 0 | 0 | 0 | 0 | 0 | 12 | 8 | 20 | 6 | 0 | 18 | 24 | 60 |
| % App. Total | 25 | 75 | 0 | | 0 | 0 | 0 | | 0 | 60 | 40 | | 25 | 0 | 75 | | |
| PHF | .500 | .750 | .000 | .667 | .000 | .000 | .000 | .000 | .000 | .750 | .667 | .714 | .500 | .000 | .563 | .545 | .750 |

Counts Unlimited, Inc.
PO Box 1178
Corona, CA 92878
(951) 268-6268

County of San Bernardino
N/S: Cedar Avenue
E/W: I-10 Eastbound On/Off Ramps
Weather: Clear

File Name : CSBCE10EPM
Site Code : 06714097
Start Date : 3/11/2014
Page No : 2

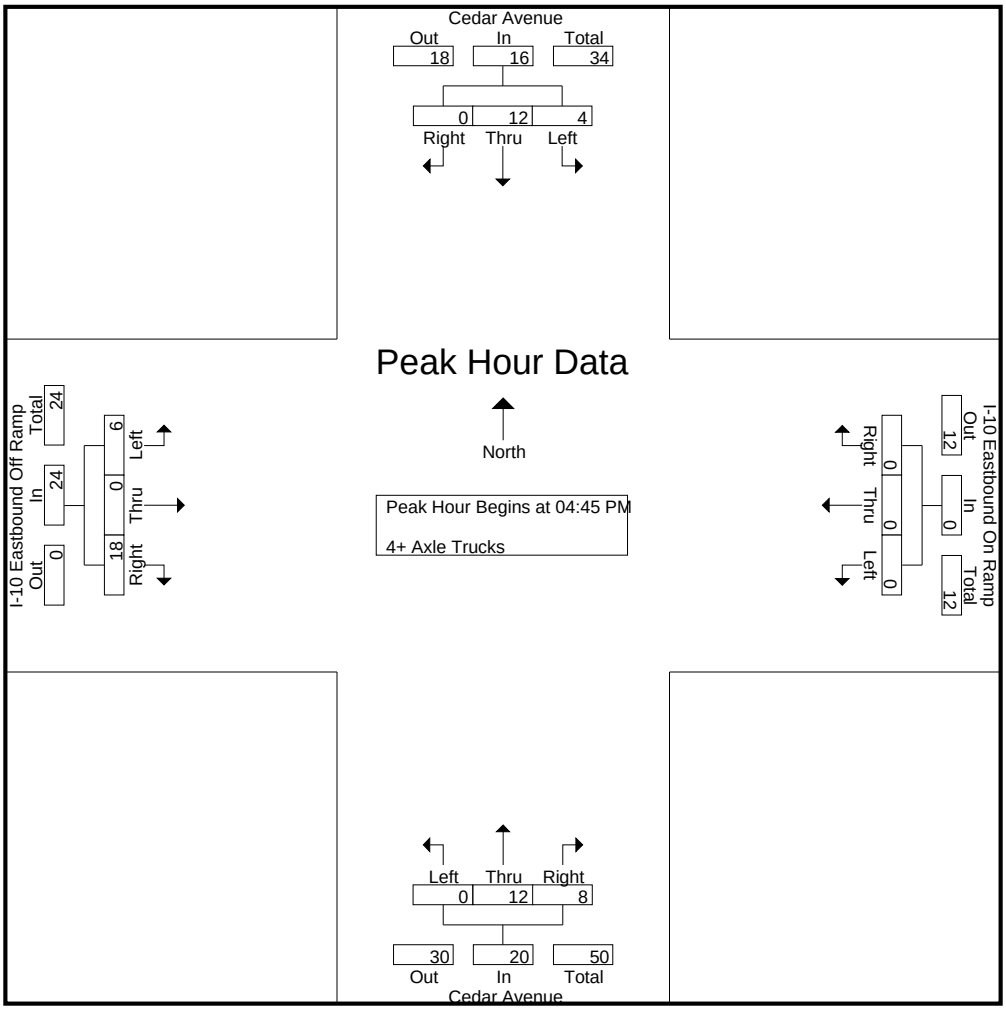


Peak Hour Analysis From 04:45 PM to 05:30 PM - Peak 1 of 1

Peak Hour for Each Approach Begins at:

| | 04:45 PM | | | | 04:45 PM | | | | 04:45 PM | | | | 04:45 PM | | | |
|---|---|---|---|---|---|---|---|---|---|---|---|---|---|---|---|---|
| +0 mins. | **2** | 2 | 0 | 4 | 0 | 0 | 0 | 0 | 0 | **4** | **3** | **7** | 1 | 0 | 3 | 4 |
| +15 mins. | 2 | **4** | 0 | **6** | 0 | 0 | 0 | 0 | 0 | 3 | 1 | 4 | 2 | 0 | 5 | 7 |
| +30 mins. | 0 | 3 | 0 | 3 | 0 | 0 | 0 | 0 | 0 | 2 | 1 | 3 | 0 | 0 | 2 | 2 |
| +45 mins. | 0 | 3 | 0 | 3 | 0 | 0 | 0 | 0 | 0 | 3 | 3 | 6 | **3** | 0 | **8** | **11** |
| Total Volume | 4 | 12 | 0 | 16 | 0 | 0 | 0 | 0 | 0 | 12 | 8 | 20 | 6 | 0 | 18 | 24 |
| % App. Total | 25 | 75 | 0 | | 0 | 0 | 0 | | 0 | 60 | 40 | | 25 | 0 | 75 | |
| PHF | .500 | .750 | .000 | .667 | .000 | .000 | .000 | .000 | .000 | .750 | .667 | .714 | .500 | .000 | .563 | .545 |

Counts Unlimited
PO Box 1178
Corona, CA 92878
(951) 268-6268

City of Jurupa Valley
N/S: Cedar Avenue
E/W: Slover Avenue
Weather: Clear

File Name : JVYCESLAM
Site Code : 06715550
Start Date : 10/7/2015
Page No : 1

Groups Printed- Total Volume

| | Cedar Avenue Southbound | | | | Slover Avenue Westbound | | | | Cedar Avenue Northbound | | | | Slover Avenue Eastbound | | | | |
|---|---|---|---|---|---|---|---|---|---|---|---|---|---|---|---|---|---|
| Start Time | Left | Thru | Right | App. Total | Left | Thru | Right | App. Total | Left | Thru | Right | App. Total | Left | Thru | Right | App. Total | Int. Total |
| 07:00 AM | 33 | 127 | 3 | 163 | 37 | 12 | 13 | 62 | 16 | 164 | 21 | 201 | 6 | 35 | 11 | 52 | 478 |
| 07:15 AM | 17 | 175 | 2 | 194 | 39 | 16 | 6 | 61 | 7 | 239 | 16 | 262 | 2 | 26 | 25 | 53 | 570 |
| 07:30 AM | 13 | 214 | 7 | 234 | 41 | 19 | 5 | 65 | 9 | 227 | 10 | 246 | 8 | 29 | 19 | 56 | 601 |
| 07:45 AM | 14 | 188 | 4 | 206 | 33 | 21 | 8 | 62 | 13 | 160 | 8 | 181 | 3 | 18 | 17 | 38 | 487 |
| Total | 77 | 704 | 16 | 797 | 150 | 68 | 32 | 250 | 45 | 790 | 55 | 890 | 19 | 108 | 72 | 199 | 2136 |
| | | | | | | | | | | | | | | | | | |
| 08:00 AM | 13 | 140 | 2 | 155 | 23 | 12 | 3 | 38 | 17 | 166 | 18 | 201 | 2 | 17 | 20 | 39 | 433 |
| 08:15 AM | 10 | 144 | 5 | 159 | 21 | 10 | 6 | 37 | 7 | 148 | 15 | 170 | 4 | 13 | 21 | 38 | 404 |
| 08:30 AM | 10 | 151 | 6 | 167 | 24 | 17 | 3 | 44 | 11 | 126 | 7 | 144 | 5 | 19 | 26 | 50 | 405 |
| 08:45 AM | 13 | 128 | 2 | 143 | 25 | 8 | 6 | 39 | 7 | 127 | 23 | 157 | 6 | 17 | 18 | 41 | 380 |
| Total | 46 | 563 | 15 | 624 | 93 | 47 | 18 | 158 | 42 | 567 | 63 | 672 | 17 | 66 | 85 | 168 | 1622 |
| | | | | | | | | | | | | | | | | | |
| Grand Total | 123 | 1267 | 31 | 1421 | 243 | 115 | 50 | 408 | 87 | 1357 | 118 | 1562 | 36 | 174 | 157 | 367 | 3758 |
| Apprch % | 8.7 | 89.2 | 2.2 | | 59.6 | 28.2 | 12.3 | | 5.6 | 86.9 | 7.6 | | 9.8 | 47.4 | 42.8 | | |
| Total % | 3.3 | 33.7 | 0.8 | 37.8 | 6.5 | 3.1 | 1.3 | 10.9 | 2.3 | 36.1 | 3.1 | 41.6 | 1 | 4.6 | 4.2 | 9.8 | |

| | Cedar Avenue Southbound | | | | Slover Avenue Westbound | | | | Cedar Avenue Northbound | | | | Slover Avenue Eastbound | | | | |
|---|---|---|---|---|---|---|---|---|---|---|---|---|---|---|---|---|---|
| Start Time | Left | Thru | Right | App. Total | Left | Thru | Right | App. Total | Left | Thru | Right | App. Total | Left | Thru | Right | App. Total | Int. Total |
| Peak Hour Analysis From 07:00 AM to 08:45 AM - Peak 1 of 1 | | | | | | | | | | | | | | | | | |
| Peak Hour for Entire Intersection Begins at 07:00 AM | | | | | | | | | | | | | | | | | |
| 07:00 AM | **33** | 127 | 3 | 163 | 37 | 12 | **13** | 62 | **16** | 164 | **21** | 201 | 6 | **35** | 11 | 52 | 478 |
| 07:15 AM | 17 | 175 | 2 | 194 | 39 | 16 | 6 | 61 | 7 | **239** | 16 | **262** | 2 | 26 | **25** | 53 | 570 |
| 07:30 AM | 13 | **214** | **7** | **234** | **41** | 19 | 5 | **65** | 9 | 227 | 10 | 246 | **8** | 29 | 19 | **56** | **601** |
| 07:45 AM | 14 | 188 | 4 | 206 | 33 | **21** | 8 | 62 | 13 | 160 | 8 | 181 | 3 | 18 | 17 | 38 | 487 |
| Total Volume | 77 | 704 | 16 | 797 | 150 | 68 | 32 | 250 | 45 | 790 | 55 | 890 | 19 | 108 | 72 | 199 | 2136 |
| % App. Total | 9.7 | 88.3 | 2 | | 60 | 27.2 | 12.8 | | 5.1 | 88.8 | 6.2 | | 9.5 | 54.3 | 36.2 | | |
| PHF | .583 | .822 | .571 | .851 | .915 | .810 | .615 | .962 | .703 | .826 | .655 | .849 | .594 | .771 | .720 | .888 | .889 |

Counts Unlimited
PO Box 1178
Corona, CA 92878
(951) 268-6268

City of Jurupa Valley
N/S: Cedar Avenue
E/W: Slover Avenue
Weather: Clear

File Name : JVYCESLAM
Site Code : 06715550
Start Date : 10/7/2015
Page No : 2

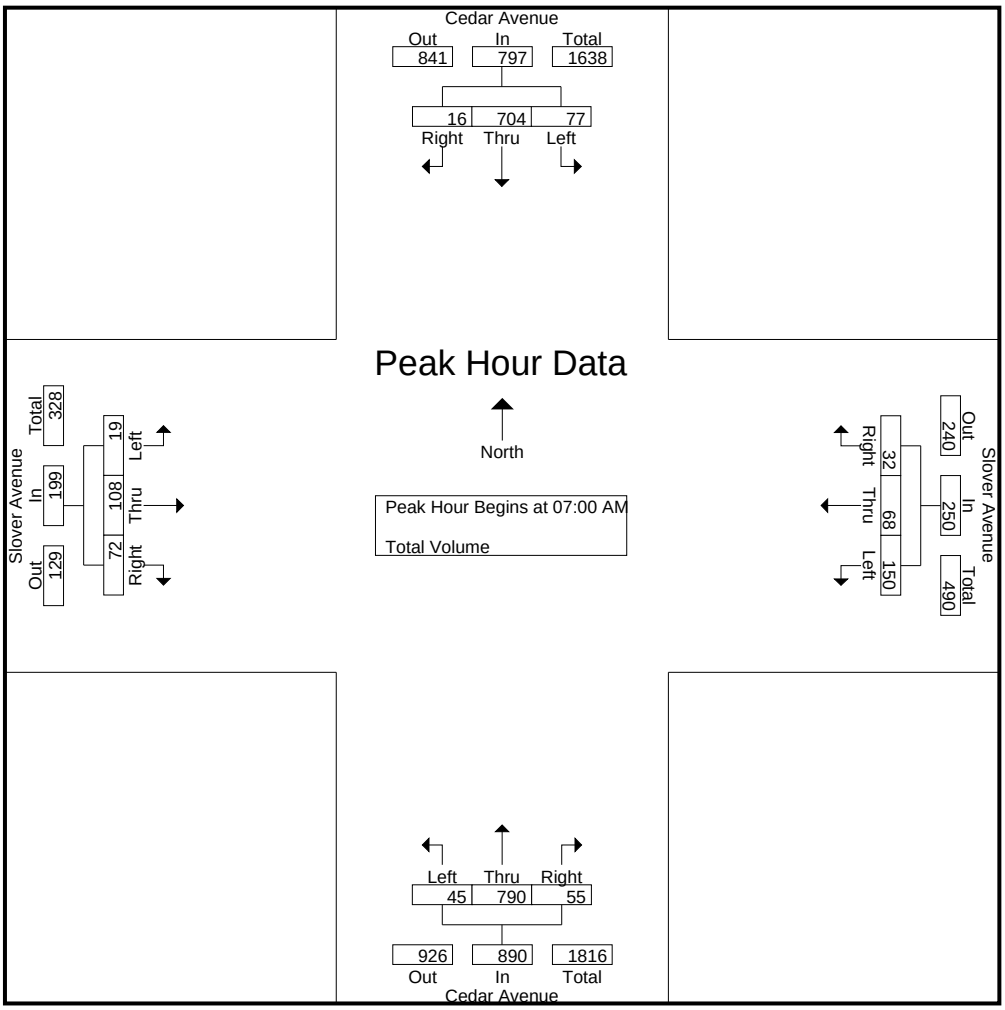


Peak Hour Analysis From 07:00 AM to 08:45 AM - Peak 1 of 1
Peak Hour for Each Approach Begins at:

| | 07:00 AM | | | | 07:00 AM | | | | 07:00 AM | | | | 07:00 AM | | | |
|---|---|---|---|---|---|---|---|---|---|---|---|---|---|---|---|---|
| +0 mins. | **33** | 127 | 3 | 163 | 37 | 12 | **13** | 62 | **16** | 164 | **21** | 201 | 6 | **35** | 11 | 52 |
| +15 mins. | 17 | 175 | 2 | 194 | 39 | 16 | 6 | 61 | 7 | **239** | 16 | **262** | 2 | 26 | **25** | 53 |
| +30 mins. | 13 | **214** | **7** | **234** | **41** | 19 | 5 | **65** | 9 | 227 | 10 | 246 | **8** | 29 | 19 | **56** |
| +45 mins. | 14 | 188 | 4 | 206 | 33 | **21** | 8 | 62 | 13 | 160 | 8 | 181 | 3 | 18 | 17 | 38 |
| Total Volume | 77 | 704 | 16 | 797 | 150 | 68 | 32 | 250 | 45 | 790 | 55 | 890 | 19 | 108 | 72 | 199 |
| % App. Total | 9.7 | 88.3 | 2 | | 60 | 27.2 | 12.8 | | 5.1 | 88.8 | 6.2 | | 9.5 | 54.3 | 36.2 | |
| PHF | .583 | .822 | .571 | .851 | .915 | .810 | .615 | .962 | .703 | .826 | .655 | .849 | .594 | .771 | .720 | .888 |

Counts Unlimited
PO Box 1178
Corona, CA 92878
(951) 268-6268

City of Jurupa Valley
N/S: Cedar Avenue
E/W: Slover Avenue
Weather: Clear

File Name : JVYCESLPM
Site Code : 06715550
Start Date : 10/7/2015
Page No : 1

Groups Printed- Total Volume

| | Cedar Avenue Southbound | | | | Slover Avenue Westbound | | | | Cedar Avenue Northbound | | | | Slover Avenue Eastbound | | | | |
|---|---|---|---|---|---|---|---|---|---|---|---|---|---|---|---|---|---|
| Start Time | Left | Thru | Right | App. Total | Left | Thru | Right | App. Total | Left | Thru | Right | App. Total | Left | Thru | Right | App. Total | Int. Total |
| 04:00 PM | 10 | 190 | 16 | 216 | 4 | 30 | 21 | 55 | 19 | 184 | 1 | 204 | 30 | 40 | 20 | 90 | 565 |
| 04:15 PM | 18 | 164 | 13 | 195 | 5 | 21 | 17 | 43 | 17 | 164 | 2 | 183 | 31 | 30 | 20 | 81 | 502 |
| 04:30 PM | 9 | 161 | 15 | 185 | 7 | 14 | 19 | 40 | 17 | 165 | 5 | 187 | 33 | 34 | 21 | 88 | 500 |
| 04:45 PM | 17 | 172 | 13 | 202 | 6 | 23 | 18 | 47 | 18 | 179 | 3 | 200 | 38 | 31 | 15 | 84 | 533 |
| Total | 54 | 687 | 57 | 798 | 22 | 88 | 75 | 185 | 71 | 692 | 11 | 774 | 132 | 135 | 76 | 343 | 2100 |
| 05:00 PM | 9 | 197 | 19 | 225 | 5 | 17 | 11 | 33 | 12 | 164 | 4 | 180 | 50 | 36 | 25 | 111 | 549 |
| 05:15 PM | 14 | 200 | 24 | 238 | 8 | 22 | 20 | 50 | 22 | 153 | 6 | 181 | 57 | 56 | 16 | 129 | 598 |
| 05:30 PM | 13 | 158 | 18 | 189 | 7 | 22 | 16 | 45 | 15 | 180 | 5 | 200 | 40 | 35 | 10 | 85 | 519 |
| 05:45 PM | 14 | 154 | 15 | 183 | 3 | 19 | 12 | 34 | 17 | 170 | 4 | 191 | 46 | 45 | 20 | 111 | 519 |
| Total | 50 | 709 | 76 | 835 | 23 | 80 | 59 | 162 | 66 | 667 | 19 | 752 | 193 | 172 | 71 | 436 | 2185 |
| Grand Total | 104 | 1396 | 133 | 1633 | 45 | 168 | 134 | 347 | 137 | 1359 | 30 | 1526 | 325 | 307 | 147 | 779 | 4285 |
| Apprch % | 6.4 | 85.5 | 8.1 | | 13 | 48.4 | 38.6 | | 9 | 89.1 | 2 | | 41.7 | 39.4 | 18.9 | | |
| Total % | 2.4 | 32.6 | 3.1 | 38.1 | 1.1 | 3.9 | 3.1 | 8.1 | 3.2 | 31.7 | 0.7 | 35.6 | 7.6 | 7.2 | 3.4 | 18.2 | |

| | Cedar Avenue Southbound | | | | Slover Avenue Westbound | | | | Cedar Avenue Northbound | | | | Slover Avenue Eastbound | | | | |
|---|---|---|---|---|---|---|---|---|---|---|---|---|---|---|---|---|---|
| Start Time | Left | Thru | Right | App. Total | Left | Thru | Right | App. Total | Left | Thru | Right | App. Total | Left | Thru | Right | App. Total | Int. Total |
| Peak Hour Analysis From 04:00 PM to 05:45 PM - Peak 1 of 1 | | | | | | | | | | | | | | | | | |
| Peak Hour for Entire Intersection Begins at 04:45 PM | | | | | | | | | | | | | | | | | |
| 04:45 PM | **17** | 172 | 13 | 202 | 6 | **23** | 18 | 47 | 18 | 179 | 3 | **200** | 38 | 31 | 15 | 84 | 533 |
| 05:00 PM | 9 | 197 | 19 | 225 | 5 | 17 | 11 | 33 | 12 | 164 | 4 | 180 | 50 | 36 | **25** | 111 | 549 |
| 05:15 PM | 14 | **200** | **24** | **238** | **8** | 22 | **20** | **50** | **22** | 153 | **6** | 181 | **57** | **56** | 16 | **129** | **598** |
| 05:30 PM | 13 | 158 | 18 | 189 | 7 | 22 | 16 | 45 | 15 | **180** | 5 | 200 | 40 | 35 | 10 | 85 | 519 |
| Total Volume | 53 | 727 | 74 | 854 | 26 | 84 | 65 | 175 | 67 | 676 | 18 | 761 | 185 | 158 | 66 | 409 | 2199 |
| % App. Total | 6.2 | 85.1 | 8.7 | | 14.9 | 48 | 37.1 | | 8.8 | 88.8 | 2.4 | | 45.2 | 38.6 | 16.1 | | |
| PHF | .779 | .909 | .771 | .897 | .813 | .913 | .813 | .875 | .761 | .939 | .750 | .951 | .811 | .705 | .660 | .793 | .919 |

Counts Unlimited
PO Box 1178
Corona, CA 92878
(951) 268-6268

City of Jurupa Valley
N/S: Cedar Avenue
E/W: Slover Avenue
Weather: Clear

File Name : JVYCESLPM
Site Code : 06715550
Start Date : 10/7/2015
Page No : 2

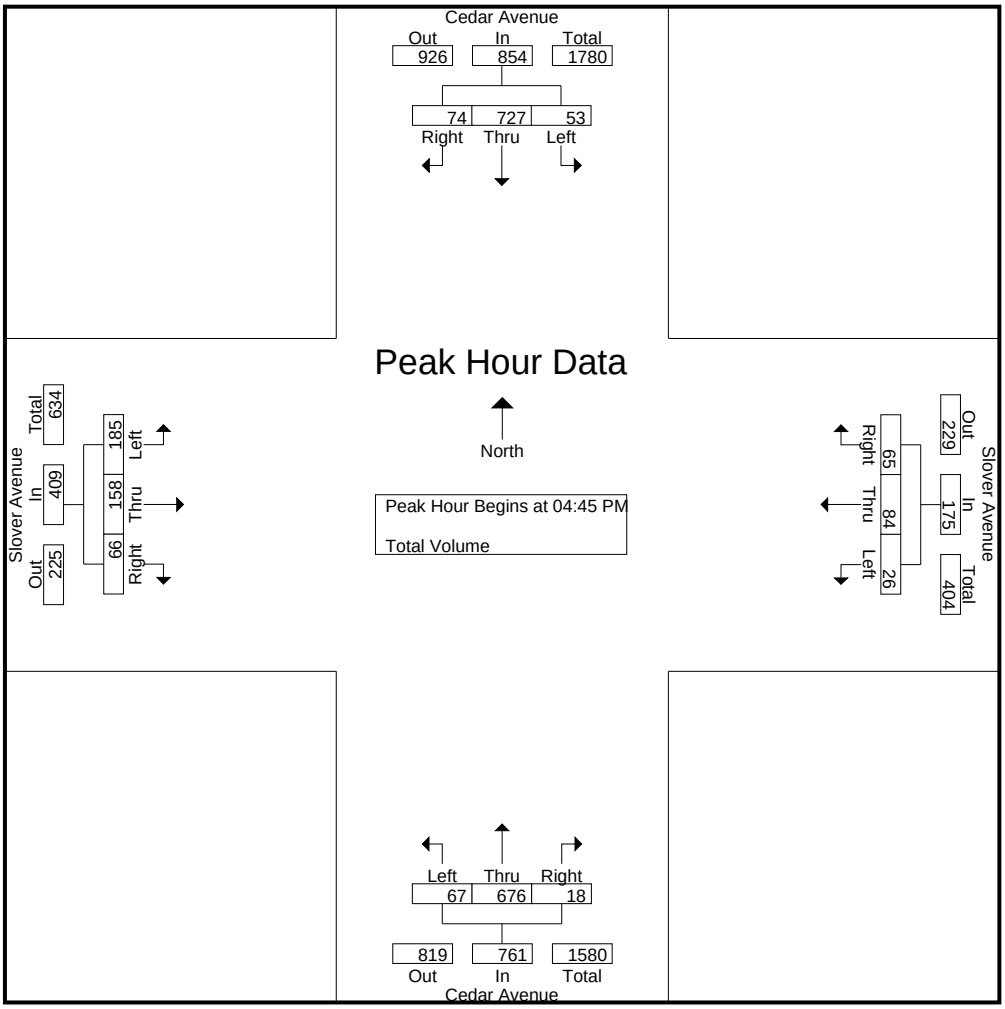


Peak Hour Analysis From 04:00 PM to 05:45 PM - Peak 1 of 1
Peak Hour for Each Approach Begins at:

| | 04:45 PM | | | | 04:00 PM | | | | 04:00 PM | | | | 05:00 PM | | | |
|---|---|---|---|---|---|---|---|---|---|---|---|---|---|---|---|---|
| +0 mins. | **17** | 172 | 13 | 202 | 4 | **30** | **21** | **55** | **19** | **184** | 1 | **204** | 50 | 36 | **25** | 111 |
| +15 mins. | 9 | 197 | 19 | 225 | 5 | 21 | 17 | 43 | 17 | 164 | 2 | 183 | **57** | **56** | 16 | **129** |
| +30 mins. | 14 | **200** | **24** | **238** | **7** | 14 | 19 | 40 | 17 | 165 | **5** | 187 | 40 | 35 | 10 | 85 |
| +45 mins. | 13 | 158 | 18 | 189 | 6 | 23 | 18 | 47 | 18 | 179 | 3 | 200 | 46 | 45 | 20 | 111 |
| Total Volume | 53 | 727 | 74 | 854 | 22 | 88 | 75 | 185 | 71 | 692 | 11 | 774 | 193 | 172 | 71 | 436 |
| % App. Total | 6.2 | 85.1 | 8.7 | | 11.9 | 47.6 | 40.5 | | 9.2 | 89.4 | 1.4 | | 44.3 | 39.4 | 16.3 | |
| PHF | .779 | .909 | .771 | .897 | .786 | .733 | .893 | .841 | .934 | .940 | .550 | .949 | .846 | .768 | .710 | .845 |

# APPENDIX C

# Signal Warrant Worksheets

# Signal Warrants Report For Intersection 7: Alder Ave (NS) / Marygold Ave (EW)

## Warrants Summary

| Warrant | Name | Met? |
|---|---|---|
| #1 | Eight Hour Vehicular Volume | No |
| #2 | Four Hour Vehicular Volume | No |
| #3 | Peak Hour | No |

## Intersection Warrants Parameters

| | |
|---|---|
| Major Approaches | S, N |
| Minor Approaches | E, W |
| Speed > 40mph | No |
| Population < 10,000 | No |
| Warrant Factor | 100% |

## Warrant Analysis Traffic Volumes

| Hour | Major Streets | | Minor Streets | |
|---|---|---|---|---|
| | S | N | E | W |
| 1 | 4 | 8 | 3 | 2 |
| 2 | 4 | 8 | 3 | 2 |
| 3 | 7 | 13 | 4 | 3 |
| 4 | 7 | 13 | 4 | 3 |
| 5 | 9 | 17 | 5 | 4 |
| 6 | 22 | 42 | 13 | 10 |
| 7 | 24 | 46 | 14 | 11 |
| 8 | 44 | 84 | 26 | 20 |
| 9 | 77 | 146 | 46 | 35 |
| 10 | 80 | 150 | 47 | 36 |
| 11 | 80 | 150 | 47 | 36 |
| 12 | 86 | 163 | 51 | 39 |
| 13 | 95 | 180 | 56 | 43 |
| 14 | 99 | 188 | 59 | 45 |
| 15 | 99 | 188 | 59 | 45 |
| 16 | 106 | 201 | 62 | 48 |
| 17 | 133 | 251 | 78 | 61 |
| 18 | 139 | 263 | 82 | 64 |
| 19 | 150 | 284 | 88 | 69 |
| 20 | 168 | 318 | 99 | 77 |
| 21 | 177 | 334 | 104 | 81 |
| 22 | 208 | 393 | 122 | 95 |
| 23 | 212 | 401 | 125 | 97 |
| 24 | 221 | 418 | 130 | 101 |

## Warrant Analysis by Hour

| Hour | Major Lanes | | Minor Lanes | | Warrant 1 Condition A | | | | Warrant 1 Condition B | | | | Warrant 2 | Warrant 3 |
|---|---|---|---|---|---|---|---|---|---|---|---|---|---|---|
| | Number | Volume | Number | Volume | 100% | 80% | 70% | 56% | 100% | 80% | 70% | 56% | | Condition B |
| 1 | 4 | 12 | 2 | 5 | No | No | No | No | No | No | No | No | No | No |
| 2 | 4 | 12 | 2 | 5 | No | No | No | No | No | No | No | No | No | No |
| 3 | 4 | 20 | 2 | 7 | No | No | No | No | No | No | No | No | No | No |
| 4 | 4 | 20 | 2 | 7 | No | No | No | No | No | No | No | No | No | No |
| 5 | 4 | 26 | 2 | 9 | No | No | No | No | No | No | No | No | No | No |
| 6 | 4 | 64 | 2 | 23 | No | No | No | No | No | No | No | No | No | No |
| 7 | 4 | 70 | 2 | 25 | No | No | No | No | No | No | No | No | No | No |
| 8 | 4 | 128 | 2 | 46 | No | No | No | No | No | No | No | No | No | No |
| 9 | 4 | 223 | 2 | 81 | No | No | No | No | No | No | No | No | No | No |
| 10 | 4 | 230 | 2 | 83 | No | No | No | No | No | No | No | No | No | No |
| 11 | 4 | 230 | 2 | 83 | No | No | No | No | No | No | No | No | No | No |
| 12 | 4 | 249 | 2 | 90 | No | No | No | No | No | No | No | No | No | No |
| 13 | 4 | 275 | 2 | 99 | No | No | No | No | No | No | No | No | No | No |
| 14 | 4 | 287 | 2 | 104 | No | No | No | No | No | No | No | No | No | No |
| 15 | 4 | 287 | 2 | 104 | No | No | No | No | No | No | No | No | No | No |
| 16 | 4 | 307 | 2 | 110 | No | No | No | No | No | No | No | No | No | No |
| 17 | 4 | 384 | 2 | 139 | No | No | No | No | No | No | No | No | No | No |
| 18 | 4 | 402 | 2 | 146 | No | No | No | No | No | No | No | No | No | No |
| 19 | 4 | 434 | 2 | 157 | No | No | No | Yes | No | No | No | No | No | No |
| 20 | 4 | 486 | 2 | 176 | No | No | No | Yes | No | No | No | No | No | No |
| 21 | 4 | 511 | 2 | 185 | No | No | No | Yes | No | No | No | Yes | No | No |
| 22 | 4 | 601 | 2 | 217 | No | Yes | Yes | Yes | No | No | No | Yes | No | No |
| 23 | 4 | 613 | 2 | 222 | No | Yes | Yes | Yes | No | No | No | Yes | No | No |
| 24 | 4 | 639 | 2 | 231 | No | Yes | Yes | Yes | No | No | Yes | Yes | No | No |
| Hours Met | | | | | 0 | 3 | 3 | 6 | 0 | 0 | 1 | 4 | 0 | 0 |

## Warrant 3 Condition A

| Orientation | E | W |
|---|---|---|
| Total Stopped Delay Per Vehicle on Minor Approach (s) | 10.4 | 10.2 |
| Number of Lanes on Minor Street Approach | 1 | 1 |
| VehicleHours of Stopped Delay on Minor Approach ([h]h:mm) | 0:22 | 0:17 |
| Delay Condition Met | No | No |
| Volume on Minor Street Approach During Same Hour | 130 | 101 |
| High Minor Volume Condition Met | Yes | Yes |
| Total Entering Volume on All Approaches During Same Hour | 870 | 870 |
| Number of Approaches on Intersection | 4 | 4 |
| Total Volume Condition Met | Yes | Yes |
| Warrant Met for Approach | No | No |
| **Warrant Met for Intersection** | **No** | |

# Signal Warrants Report For Intersection 9: Locust Ave (NS) / Marygold Ave (EW)

## Warrants Summary

| Warrant | Name | Met? |
|---|---|---|
| #1 | Eight Hour Vehicular Volume | No |
| #2 | Four Hour Vehicular Volume | No |
| #3 | Peak Hour | No |

## Intersection Warrants Parameters

| | |
|---|---|
| Major Approaches | N, S |
| Minor Approaches | E, W |
| Speed > 40mph | No |
| Population < 10,000 | No |
| Warrant Factor | 100% |

## Warrant Analysis Traffic Volumes

| Hour | Major Streets | | Minor Streets | |
|---|---|---|---|---|
| | N | S | E | W |
| 1 | 214 | 120 | 61 | 103 |
| 2 | 205 | 115 | 59 | 99 |
| 3 | 201 | 113 | 57 | 97 |
| 4 | 171 | 96 | 49 | 82 |
| 5 | 163 | 91 | 46 | 78 |
| 6 | 146 | 82 | 41 | 70 |
| 7 | 135 | 76 | 38 | 65 |
| 8 | 128 | 72 | 37 | 62 |
| 9 | 103 | 58 | 29 | 49 |
| 10 | 96 | 54 | 27 | 46 |
| 11 | 96 | 54 | 27 | 46 |
| 12 | 92 | 52 | 26 | 44 |
| 13 | 83 | 47 | 24 | 40 |
| 14 | 77 | 43 | 22 | 37 |
| 15 | 77 | 43 | 22 | 37 |
| 16 | 75 | 42 | 21 | 36 |
| 17 | 43 | 24 | 12 | 21 |
| 18 | 24 | 13 | 7 | 11 |
| 19 | 21 | 12 | 6 | 10 |
| 20 | 9 | 5 | 2 | 4 |
| 21 | 6 | 4 | 2 | 3 |
| 22 | 6 | 4 | 2 | 3 |
| 23 | 4 | 2 | 1 | 2 |
| 24 | 4 | 2 | 1 | 2 |

## Warrant Analysis by Hour

| Hour | Major Lanes | | Minor Lanes | | Warrant 1 Condition A | | | | Warrant 1 Condition B | | | | Warrant 2 | Warrant 3 |
|---|---|---|---|---|---|---|---|---|---|---|---|---|---|---|
| | Number | Volume | Number | Volume | 100% | 80% | 70% | 56% | 100% | 80% | 70% | 56% | | Condition B |
| 1 | 4 | 334 | 2 | 164 | No | No | No | No | No | No | No | No | No | No |
| 2 | 4 | 320 | 2 | 158 | No | No | No | No | No | No | No | No | No | No |
| 3 | 4 | 314 | 2 | 154 | No | No | No | No | No | No | No | No | No | No |
| 4 | 4 | 267 | 2 | 131 | No | No | No | No | No | No | No | No | No | No |
| 5 | 4 | 254 | 2 | 124 | No | No | No | No | No | No | No | No | No | No |
| 6 | 4 | 228 | 2 | 111 | No | No | No | No | No | No | No | No | No | No |
| 7 | 4 | 211 | 2 | 103 | No | No | No | No | No | No | No | No | No | No |
| 8 | 4 | 200 | 2 | 99 | No | No | No | No | No | No | No | No | No | No |
| 9 | 4 | 161 | 2 | 78 | No | No | No | No | No | No | No | No | No | No |
| 10 | 4 | 150 | 2 | 73 | No | No | No | No | No | No | No | No | No | No |
| 11 | 4 | 150 | 2 | 73 | No | No | No | No | No | No | No | No | No | No |
| 12 | 4 | 144 | 2 | 70 | No | No | No | No | No | No | No | No | No | No |
| 13 | 4 | 130 | 2 | 64 | No | No | No | No | No | No | No | No | No | No |
| 14 | 4 | 120 | 2 | 59 | No | No | No | No | No | No | No | No | No | No |
| 15 | 4 | 120 | 2 | 59 | No | No | No | No | No | No | No | No | No | No |
| 16 | 4 | 117 | 2 | 57 | No | No | No | No | No | No | No | No | No | No |
| 17 | 4 | 67 | 2 | 33 | No | No | No | No | No | No | No | No | No | No |
| 18 | 4 | 37 | 2 | 18 | No | No | No | No | No | No | No | No | No | No |
| 19 | 4 | 33 | 2 | 16 | No | No | No | No | No | No | No | No | No | No |
| 20 | 4 | 14 | 2 | 6 | No | No | No | No | No | No | No | No | No | No |
| 21 | 4 | 10 | 2 | 5 | No | No | No | No | No | No | No | No | No | No |
| 22 | 4 | 10 | 2 | 5 | No | No | No | No | No | No | No | No | No | No |
| 23 | 4 | 6 | 2 | 3 | No | No | No | No | No | No | No | No | No | No |
| 24 | 4 | 6 | 2 | 3 | No | No | No | No | No | No | No | No | No | No |
| Hours Met | | | | | 0 | 0 | 0 | 0 | 0 | 0 | 0 | 0 | 0 | 0 |

## Warrant 3 Condition A

| Orientation | E | W |
|---|---|---|
| Total Stopped Delay Per Vehicle on Minor Approach (s) | 8.4 | 8.6 |
| Number of Lanes on Minor Street Approach | 1 | 1 |
| VehicleHours of Stopped Delay on Minor Approach ([h]h:mm) | 0:08 | 0:14 |
| Delay Condition Met | No | No |
| Volume on Minor Street Approach During Same Hour | 61 | 103 |
| High Minor Volume Condition Met | No | Yes |
| Total Entering Volume on All Approaches During Same Hour | 498 | 498 |
| Number of Approaches on Intersection | 4 | 4 |
| Total Volume Condition Met | No | No |
| Warrant Met for Approach | No | No |
| **Warrant Met for Intersection** | **No** | |

# Signal Warrants Report For Intersection 7: Alder Ave (NS) / Marygold Ave (EW)

## Warrants Summary

| Warrant | Name | Met? |
|---|---|---|
| #1 | Eight Hour Vehicular Volume | No |
| #2 | Four Hour Vehicular Volume | Yes |
| #3 | Peak Hour | Yes |

## Intersection Warrants Parameters

| | |
|---|---|
| Major Approaches | S, N |
| Minor Approaches | E, W |
| Speed > 40mph | No |
| Population < 10,000 | No |
| Warrant Factor | 100% |

## Warrant Analysis Traffic Volumes

| Hour | Major Streets | | Minor Streets | |
|---|---|---|---|---|
| | S | N | E | W |
| 1 | 9 | 7 | 2 | 6 |
| 2 | 9 | 7 | 2 | 6 |
| 3 | 13 | 11 | 3 | 8 |
| 4 | 13 | 11 | 3 | 8 |
| 5 | 17 | 14 | 4 | 11 |
| 6 | 43 | 36 | 11 | 28 |
| 7 | 47 | 39 | 12 | 31 |
| 8 | 85 | 72 | 22 | 56 |
| 9 | 149 | 125 | 39 | 98 |
| 10 | 154 | 129 | 40 | 101 |
| 11 | 154 | 129 | 40 | 101 |
| 12 | 167 | 140 | 44 | 110 |
| 13 | 184 | 154 | 48 | 121 |
| 14 | 192 | 161 | 50 | 126 |
| 15 | 192 | 161 | 50 | 126 |
| 16 | 205 | 172 | 54 | 135 |
| 17 | 256 | 215 | 67 | 169 |
| 18 | 269 | 226 | 71 | 177 |
| 19 | 290 | 243 | 76 | 191 |
| 20 | 325 | 272 | 85 | 214 |
| 21 | 342 | 286 | 90 | 225 |
| 22 | 401 | 337 | 105 | 264 |
| 23 | 410 | 344 | 108 | 270 |
| 24 | 427 | 358 | 112 | 281 |

## Warrant Analysis by Hour

| Hour | Major Lanes | | Minor Lanes | | Warrant 1 Condition A | | | | Warrant 1 Condition B | | | | Warrant 2 | Warrant 3 |
|---|---|---|---|---|---|---|---|---|---|---|---|---|---|---|
| | Number | Volume | Number | Volume | 100% | 80% | 70% | 56% | 100% | 80% | 70% | 56% | | Condition B |
| 1 | 4 | 16 | 2 | 8 | No | No | No | No | No | No | No | No | No | No |
| 2 | 4 | 16 | 2 | 8 | No | No | No | No | No | No | No | No | No | No |
| 3 | 4 | 24 | 2 | 11 | No | No | No | No | No | No | No | No | No | No |
| 4 | 4 | 24 | 2 | 11 | No | No | No | No | No | No | No | No | No | No |
| 5 | 4 | 31 | 2 | 15 | No | No | No | No | No | No | No | No | No | No |
| 6 | 4 | 79 | 2 | 39 | No | No | No | No | No | No | No | No | No | No |
| 7 | 4 | 86 | 2 | 43 | No | No | No | No | No | No | No | No | No | No |
| 8 | 4 | 157 | 2 | 78 | No | No | No | No | No | No | No | No | No | No |
| 9 | 4 | 274 | 2 | 137 | No | No | No | No | No | No | No | No | No | No |
| 10 | 4 | 283 | 2 | 141 | No | No | No | No | No | No | No | No | No | No |
| 11 | 4 | 283 | 2 | 141 | No | No | No | No | No | No | No | No | No | No |
| 12 | 4 | 307 | 2 | 154 | No | No | No | No | No | No | No | No | No | No |
| 13 | 4 | 338 | 2 | 169 | No | No | No | Yes | No | No | No | No | No | No |
| 14 | 4 | 353 | 2 | 176 | No | No | No | Yes | No | No | No | No | No | No |
| 15 | 4 | 353 | 2 | 176 | No | No | No | Yes | No | No | No | No | No | No |
| 16 | 4 | 377 | 2 | 189 | No | No | No | Yes | No | No | No | No | No | No |
| 17 | 4 | 471 | 2 | 236 | No | No | Yes | Yes | No | No | No | No | No | No |
| 18 | 4 | 495 | 2 | 248 | No | Yes | Yes | Yes | No | No | No | No | No | No |
| 19 | 4 | 533 | 2 | 267 | No | Yes | Yes | Yes | No | No | No | Yes | No | No |
| 20 | 4 | 597 | 2 | 299 | No | Yes | Yes | Yes | No | No | No | Yes | Yes | No |
| 21 | 4 | 628 | 2 | 315 | Yes | Yes | Yes | Yes | No | No | No | Yes | Yes | No |
| 22 | 4 | 738 | 2 | 369 | Yes | Yes | Yes | Yes | No | Yes | Yes | Yes | Yes | No |
| 23 | 4 | 754 | 2 | 378 | Yes | Yes | Yes | Yes | No | Yes | Yes | Yes | Yes | No |
| 24 | 4 | 785 | 2 | 393 | Yes | Yes | Yes | Yes | No | Yes | Yes | Yes | Yes | Yes |
| Hours Met | | | | | 4 | 7 | 8 | 12 | 0 | 3 | 3 | 6 | 5 | 1 |

## Warrant 3 Condition A

| Orientation | E | W |
|---|---|---|
| Total Stopped Delay Per Vehicle on Minor Approach (s) | 12.8 | 19.1 |
| Number of Lanes on Minor Street Approach | 1 | 1 |
| VehicleHours of Stopped Delay on Minor Approach ([h]h:mm) | 0:23 | 1:29 |
| Delay Condition Met | No | No |
| Volume on Minor Street Approach During Same Hour | 112 | 281 |
| High Minor Volume Condition Met | Yes | Yes |
| Total Entering Volume on All Approaches During Same Hour | 1178 | 1178 |
| Number of Approaches on Intersection | 4 | 4 |
| Total Volume Condition Met | Yes | Yes |
| Warrant Met for Approach | No | No |
| **Warrant Met for Intersection** | **No** | |

# Signal Warrants Report For Intersection 9: Locust Ave (NS) / Marygold Ave (EW)

## Warrants Summary

| Warrant | Name | Met? |
|---|---|---|
| #1 | Eight Hour Vehicular Volume | No |
| #2 | Four Hour Vehicular Volume | No |
| #3 | Peak Hour | No |

## Intersection Warrants Parameters

| | |
|---|---|
| Major Approaches | N, S |
| Minor Approaches | E, W |
| Speed > 40mph | No |
| Population < 10,000 | No |
| Warrant Factor | 100% |

## Warrant Analysis Traffic Volumes

| Hour | Major Streets | | Minor Streets | |
|---|---|---|---|---|
| | N | S | E | W |
| 1 | 174 | 308 | 58 | 168 |
| 2 | 167 | 296 | 56 | 161 |
| 3 | 164 | 290 | 55 | 158 |
| 4 | 139 | 246 | 46 | 134 |
| 5 | 132 | 234 | 44 | 128 |
| 6 | 118 | 209 | 39 | 114 |
| 7 | 110 | 194 | 37 | 106 |
| 8 | 104 | 185 | 35 | 101 |
| 9 | 84 | 148 | 28 | 81 |
| 10 | 78 | 139 | 26 | 76 |
| 11 | 78 | 139 | 26 | 76 |
| 12 | 75 | 132 | 25 | 72 |
| 13 | 68 | 120 | 23 | 66 |
| 14 | 63 | 111 | 21 | 60 |
| 15 | 63 | 111 | 21 | 60 |
| 16 | 61 | 108 | 20 | 59 |
| 17 | 35 | 62 | 12 | 34 |
| 18 | 19 | 34 | 6 | 18 |
| 19 | 17 | 31 | 6 | 17 |
| 20 | 7 | 12 | 2 | 7 |
| 21 | 5 | 9 | 2 | 5 |
| 22 | 5 | 9 | 2 | 5 |
| 23 | 3 | 6 | 1 | 3 |
| 24 | 3 | 6 | 1 | 3 |

## Warrant Analysis by Hour

| Hour | Major Lanes | | Minor Lanes | | Warrant 1 Condition A | | | | Warrant 1 Condition B | | | | Warrant 2 | Warrant 3 |
|---|---|---|---|---|---|---|---|---|---|---|---|---|---|---|
| | Number | Volume | Number | Volume | 100% | 80% | 70% | 56% | 100% | 80% | 70% | 56% | | Condition B |
| 1 | 4 | 482 | 2 | 226 | No | Yes | Yes | Yes | No | No | No | No | No | No |
| 2 | 4 | 463 | 2 | 217 | No | No | Yes | Yes | No | No | No | No | No | No |
| 3 | 4 | 454 | 2 | 213 | No | No | Yes | Yes | No | No | No | No | No | No |
| 4 | 4 | 385 | 2 | 180 | No | No | No | Yes | No | No | No | No | No | No |
| 5 | 4 | 366 | 2 | 172 | No | No | No | Yes | No | No | No | No | No | No |
| 6 | 4 | 327 | 2 | 153 | No | No | No | No | No | No | No | No | No | No |
| 7 | 4 | 304 | 2 | 143 | No | No | No | No | No | No | No | No | No | No |
| 8 | 4 | 289 | 2 | 136 | No | No | No | No | No | No | No | No | No | No |
| 9 | 4 | 232 | 2 | 109 | No | No | No | No | No | No | No | No | No | No |
| 10 | 4 | 217 | 2 | 102 | No | No | No | No | No | No | No | No | No | No |
| 11 | 4 | 217 | 2 | 102 | No | No | No | No | No | No | No | No | No | No |
| 12 | 4 | 207 | 2 | 97 | No | No | No | No | No | No | No | No | No | No |
| 13 | 4 | 188 | 2 | 89 | No | No | No | No | No | No | No | No | No | No |
| 14 | 4 | 174 | 2 | 81 | No | No | No | No | No | No | No | No | No | No |
| 15 | 4 | 174 | 2 | 81 | No | No | No | No | No | No | No | No | No | No |
| 16 | 4 | 169 | 2 | 79 | No | No | No | No | No | No | No | No | No | No |
| 17 | 4 | 97 | 2 | 46 | No | No | No | No | No | No | No | No | No | No |
| 18 | 4 | 53 | 2 | 24 | No | No | No | No | No | No | No | No | No | No |
| 19 | 4 | 48 | 2 | 23 | No | No | No | No | No | No | No | No | No | No |
| 20 | 4 | 19 | 2 | 9 | No | No | No | No | No | No | No | No | No | No |
| 21 | 4 | 14 | 2 | 7 | No | No | No | No | No | No | No | No | No | No |
| 22 | 4 | 14 | 2 | 7 | No | No | No | No | No | No | No | No | No | No |
| 23 | 4 | 9 | 2 | 4 | No | No | No | No | No | No | No | No | No | No |
| 24 | 4 | 9 | 2 | 4 | No | No | No | No | No | No | No | No | No | No |
| Hours Met | | | | | 0 | 1 | 3 | 5 | 0 | 0 | 0 | 0 | 0 | 0 |

## Warrant 3 Condition A

| Orientation | E | W |
|---|---|---|
| Total Stopped Delay Per Vehicle on Minor Approach (s) | 9 | 10.2 |
| Number of Lanes on Minor Street Approach | 1 | 1 |
| VehicleHours of Stopped Delay on Minor Approach ([h]h:mm) | 0:08 | 0:28 |
| Delay Condition Met | No | No |
| Volume on Minor Street Approach During Same Hour | 58 | 168 |
| High Minor Volume Condition Met | No | Yes |
| Total Entering Volume on All Approaches During Same Hour | 708 | 708 |
| Number of Approaches on Intersection | 4 | 4 |
| Total Volume Condition Met | No | No |
| Warrant Met for Approach | No | No |
| **Warrant Met for Intersection** | **No** | |

# Signal Warrants Report For Intersection 7: Alder Ave (NS) / Marygold Ave (EW)

## Warrants Summary

| Warrant | Name | Met? |
|---|---|---|
| #1 | Eight Hour Vehicular Volume | No |
| #2 | Four Hour Vehicular Volume | No |
| #3 | Peak Hour | No |

## Intersection Warrants Parameters

| | |
|---|---|
| Major Approaches | S, N |
| Minor Approaches | E, W |
| Speed > 40mph | No |
| Population < 10,000 | No |
| Warrant Factor | 100% |

## Warrant Analysis Traffic Volumes

| Hour | Major Streets | | Minor Streets | |
|---|---|---|---|---|
| | S | N | E | W |
| 1 | 5 | 9 | 3 | 2 |
| 2 | 5 | 9 | 3 | 2 |
| 3 | 8 | 14 | 5 | 3 |
| 4 | 8 | 14 | 5 | 3 |
| 5 | 10 | 19 | 7 | 5 |
| 6 | 25 | 47 | 17 | 11 |
| 7 | 28 | 51 | 18 | 13 |
| 8 | 50 | 93 | 34 | 23 |
| 9 | 88 | 163 | 59 | 40 |
| 10 | 90 | 168 | 60 | 41 |
| 11 | 90 | 168 | 60 | 41 |
| 12 | 98 | 182 | 66 | 44 |
| 13 | 108 | 200 | 72 | 49 |
| 14 | 113 | 210 | 76 | 51 |
| 15 | 113 | 210 | 76 | 51 |
| 16 | 120 | 224 | 81 | 55 |
| 17 | 150 | 280 | 101 | 68 |
| 18 | 158 | 294 | 106 | 72 |
| 19 | 170 | 317 | 114 | 78 |
| 20 | 190 | 354 | 128 | 87 |
| 21 | 200 | 373 | 134 | 91 |
| 22 | 235 | 438 | 158 | 107 |
| 23 | 240 | 447 | 161 | 109 |
| 24 | 250 | 466 | 168 | 114 |

## Warrant Analysis by Hour

| Hour | Major Lanes | | Minor Lanes | | Warrant 1 Condition A | | | | Warrant 1 Condition B | | | | Warrant 2 | Warrant 3 |
|---|---|---|---|---|---|---|---|---|---|---|---|---|---|---|
| | Number | Volume | Number | Volume | 100% | 80% | 70% | 56% | 100% | 80% | 70% | 56% | | Condition B |
| 1 | 4 | 14 | 2 | 5 | No | No | No | No | No | No | No | No | No | No |
| 2 | 4 | 14 | 2 | 5 | No | No | No | No | No | No | No | No | No | No |
| 3 | 4 | 22 | 2 | 8 | No | No | No | No | No | No | No | No | No | No |
| 4 | 4 | 22 | 2 | 8 | No | No | No | No | No | No | No | No | No | No |
| 5 | 4 | 29 | 2 | 12 | No | No | No | No | No | No | No | No | No | No |
| 6 | 4 | 72 | 2 | 28 | No | No | No | No | No | No | No | No | No | No |
| 7 | 4 | 79 | 2 | 31 | No | No | No | No | No | No | No | No | No | No |
| 8 | 4 | 143 | 2 | 57 | No | No | No | No | No | No | No | No | No | No |
| 9 | 4 | 251 | 2 | 99 | No | No | No | No | No | No | No | No | No | No |
| 10 | 4 | 258 | 2 | 101 | No | No | No | No | No | No | No | No | No | No |
| 11 | 4 | 258 | 2 | 101 | No | No | No | No | No | No | No | No | No | No |
| 12 | 4 | 280 | 2 | 110 | No | No | No | No | No | No | No | No | No | No |
| 13 | 4 | 308 | 2 | 121 | No | No | No | No | No | No | No | No | No | No |
| 14 | 4 | 323 | 2 | 127 | No | No | No | No | No | No | No | No | No | No |
| 15 | 4 | 323 | 2 | 127 | No | No | No | No | No | No | No | No | No | No |
| 16 | 4 | 344 | 2 | 136 | No | No | No | No | No | No | No | No | No | No |
| 17 | 4 | 430 | 2 | 169 | No | No | No | Yes | No | No | No | No | No | No |
| 18 | 4 | 452 | 2 | 178 | No | No | Yes | Yes | No | No | No | No | No | No |
| 19 | 4 | 487 | 2 | 192 | No | No | Yes | Yes | No | No | No | No | No | No |
| 20 | 4 | 544 | 2 | 215 | No | Yes | Yes | Yes | No | No | No | Yes | No | No |
| 21 | 4 | 573 | 2 | 225 | No | Yes | Yes | Yes | No | No | No | Yes | No | No |
| 22 | 4 | 673 | 2 | 265 | Yes | Yes | Yes | Yes | No | No | Yes | Yes | Yes | No |
| 23 | 4 | 687 | 2 | 270 | Yes | Yes | Yes | Yes | No | No | Yes | Yes | Yes | No |
| 24 | 4 | 716 | 2 | 282 | Yes | Yes | Yes | Yes | No | No | Yes | Yes | Yes | No |
| Hours Met | | | | | 3 | 5 | 7 | 8 | 0 | 0 | 3 | 5 | 3 | 0 |

## Warrant 3 Condition A

| Orientation | E | W |
|---|---|---|
| Total Stopped Delay Per Vehicle on Minor Approach (s) | 11.9 | 11 |
| Number of Lanes on Minor Street Approach | 1 | 1 |
| VehicleHours of Stopped Delay on Minor Approach ([h]h:mm) | 0:33 | 0:20 |
| Delay Condition Met | No | No |
| Volume on Minor Street Approach During Same Hour | 168 | 114 |
| High Minor Volume Condition Met | Yes | Yes |
| Total Entering Volume on All Approaches During Same Hour | 998 | 998 |
| Number of Approaches on Intersection | 4 | 4 |
| Total Volume Condition Met | Yes | Yes |
| Warrant Met for Approach | No | No |
| **Warrant Met for Intersection** | **No** | |

# Signal Warrants Report For Intersection 9: Locust Ave (NS) / Marygold Ave (EW)

## Warrants Summary

| Warrant | Name | Met? |
|---|---|---|
| #1 | Eight Hour Vehicular Volume | No |
| #2 | Four Hour Vehicular Volume | No |
| #3 | Peak Hour | No |

## Intersection Warrants Parameters

| | |
|---|---|
| Major Approaches | N, S |
| Minor Approaches | E, W |
| Speed > 40mph | No |
| Population < 10,000 | No |
| Warrant Factor | 100% |

## Warrant Analysis Traffic Volumes

| Hour | Major Streets | | Minor Streets | |
|---|---|---|---|---|
| | N | S | E | W |
| 1 | 225 | 157 | 84 | 182 |
| 2 | 216 | 151 | 81 | 175 |
| 3 | 212 | 148 | 79 | 171 |
| 4 | 180 | 126 | 67 | 146 |
| 5 | 171 | 119 | 64 | 138 |
| 6 | 153 | 107 | 57 | 124 |
| 7 | 142 | 99 | 53 | 115 |
| 8 | 135 | 94 | 50 | 109 |
| 9 | 108 | 75 | 40 | 87 |
| 10 | 101 | 71 | 38 | 82 |
| 11 | 101 | 71 | 38 | 82 |
| 12 | 97 | 68 | 36 | 78 |
| 13 | 88 | 61 | 33 | 71 |
| 14 | 81 | 57 | 30 | 66 |
| 15 | 81 | 57 | 30 | 66 |
| 16 | 79 | 55 | 29 | 64 |
| 17 | 45 | 31 | 17 | 36 |
| 18 | 25 | 17 | 9 | 20 |
| 19 | 23 | 16 | 8 | 18 |
| 20 | 9 | 6 | 3 | 7 |
| 21 | 7 | 5 | 3 | 5 |
| 22 | 7 | 5 | 3 | 5 |
| 23 | 5 | 3 | 2 | 4 |
| 24 | 5 | 3 | 2 | 4 |

## Warrant Analysis by Hour

| Hour | Major Lanes | | Minor Lanes | | Warrant 1 Condition A | | | | Warrant 1 Condition B | | | | Warrant 2 | Warrant 3 |
|---|---|---|---|---|---|---|---|---|---|---|---|---|---|---|
| | Number | Volume | Number | Volume | 100% | 80% | 70% | 56% | 100% | 80% | 70% | 56% | | Condition B |
| 1 | 4 | 382 | 2 | 266 | No | No | No | Yes | No | No | No | No | No | No |
| 2 | 4 | 367 | 2 | 256 | No | No | No | Yes | No | No | No | No | No | No |
| 3 | 4 | 360 | 2 | 250 | No | No | No | Yes | No | No | No | No | No | No |
| 4 | 4 | 306 | 2 | 213 | No | No | No | No | No | No | No | No | No | No |
| 5 | 4 | 290 | 2 | 202 | No | No | No | No | No | No | No | No | No | No |
| 6 | 4 | 260 | 2 | 181 | No | No | No | No | No | No | No | No | No | No |
| 7 | 4 | 241 | 2 | 168 | No | No | No | No | No | No | No | No | No | No |
| 8 | 4 | 229 | 2 | 159 | No | No | No | No | No | No | No | No | No | No |
| 9 | 4 | 183 | 2 | 127 | No | No | No | No | No | No | No | No | No | No |
| 10 | 4 | 172 | 2 | 120 | No | No | No | No | No | No | No | No | No | No |
| 11 | 4 | 172 | 2 | 120 | No | No | No | No | No | No | No | No | No | No |
| 12 | 4 | 165 | 2 | 114 | No | No | No | No | No | No | No | No | No | No |
| 13 | 4 | 149 | 2 | 104 | No | No | No | No | No | No | No | No | No | No |
| 14 | 4 | 138 | 2 | 96 | No | No | No | No | No | No | No | No | No | No |
| 15 | 4 | 138 | 2 | 96 | No | No | No | No | No | No | No | No | No | No |
| 16 | 4 | 134 | 2 | 93 | No | No | No | No | No | No | No | No | No | No |
| 17 | 4 | 76 | 2 | 53 | No | No | No | No | No | No | No | No | No | No |
| 18 | 4 | 42 | 2 | 29 | No | No | No | No | No | No | No | No | No | No |
| 19 | 4 | 39 | 2 | 26 | No | No | No | No | No | No | No | No | No | No |
| 20 | 4 | 15 | 2 | 10 | No | No | No | No | No | No | No | No | No | No |
| 21 | 4 | 12 | 2 | 8 | No | No | No | No | No | No | No | No | No | No |
| 22 | 4 | 12 | 2 | 8 | No | No | No | No | No | No | No | No | No | No |
| 23 | 4 | 8 | 2 | 6 | No | No | No | No | No | No | No | No | No | No |
| 24 | 4 | 8 | 2 | 6 | No | No | No | No | No | No | No | No | No | No |
| Hours Met | | | | | 0 | 0 | 0 | 3 | 0 | 0 | 0 | 0 | 0 | 0 |

## Warrant 3 Condition A

| Orientation | E | W |
|---|---|---|
| Total Stopped Delay Per Vehicle on Minor Approach (s) | 9 | 9.4 |
| Number of Lanes on Minor Street Approach | 1 | 1 |
| VehicleHours of Stopped Delay on Minor Approach ([h]h:mm) | 0:12 | 0:28 |
| Delay Condition Met | No | No |
| Volume on Minor Street Approach During Same Hour | 84 | 182 |
| High Minor Volume Condition Met | No | Yes |
| Total Entering Volume on All Approaches During Same Hour | 648 | 648 |
| Number of Approaches on Intersection | 4 | 4 |
| Total Volume Condition Met | No | No |
| Warrant Met for Approach | No | No |
| **Warrant Met for Intersection** | **No** | |

# Signal Warrants Report For Intersection 7: Alder Ave (NS) / Marygold Ave (EW)

## Warrants Summary

| Warrant | Name | Met? |
|---|---|---|
| #1 | Eight Hour Vehicular Volume | No |
| #2 | Four Hour Vehicular Volume | Yes |
| #3 | Peak Hour | Yes |

## Intersection Warrants Parameters

| | |
|---|---|
| Major Approaches | S, N |
| Minor Approaches | E, W |
| Speed > 40mph | No |
| Population < 10,000 | No |
| Warrant Factor | 100% |

## Warrant Analysis Traffic Volumes

| Hour | Major Streets | | Minor Streets | |
|---|---|---|---|---|
| | S | N | E | W |
| 1 | 10 | 8 | 3 | 6 |
| 2 | 10 | 8 | 3 | 6 |
| 3 | 15 | 12 | 4 | 9 |
| 4 | 15 | 12 | 4 | 9 |
| 5 | 20 | 16 | 5 | 12 |
| 6 | 51 | 40 | 13 | 30 |
| 7 | 56 | 44 | 14 | 33 |
| 8 | 102 | 80 | 26 | 59 |
| 9 | 179 | 140 | 46 | 104 |
| 10 | 184 | 144 | 47 | 107 |
| 11 | 184 | 144 | 47 | 107 |
| 12 | 199 | 156 | 51 | 115 |
| 13 | 220 | 172 | 56 | 127 |
| 14 | 230 | 180 | 59 | 133 |
| 15 | 230 | 180 | 59 | 133 |
| 16 | 245 | 192 | 63 | 142 |
| 17 | 307 | 239 | 79 | 178 |
| 18 | 322 | 251 | 83 | 186 |
| 19 | 347 | 271 | 89 | 201 |
| 20 | 388 | 303 | 100 | 225 |
| 21 | 409 | 319 | 105 | 237 |
| 22 | 480 | 375 | 123 | 278 |
| 23 | 491 | 383 | 126 | 284 |
| 24 | 511 | 399 | 131 | 296 |

## Warrant Analysis by Hour

| Hour | Major Lanes | | Minor Lanes | | Warrant 1 Condition A | | | | Warrant 1 Condition B | | | | Warrant 2 | Warrant 3 |
|---|---|---|---|---|---|---|---|---|---|---|---|---|---|---|
| | Number | Volume | Number | Volume | 100% | 80% | 70% | 56% | 100% | 80% | 70% | 56% | | Condition B |
| 1 | 4 | 18 | 2 | 9 | No | No | No | No | No | No | No | No | No | No |
| 2 | 4 | 18 | 2 | 9 | No | No | No | No | No | No | No | No | No | No |
| 3 | 4 | 27 | 2 | 13 | No | No | No | No | No | No | No | No | No | No |
| 4 | 4 | 27 | 2 | 13 | No | No | No | No | No | No | No | No | No | No |
| 5 | 4 | 36 | 2 | 17 | No | No | No | No | No | No | No | No | No | No |
| 6 | 4 | 91 | 2 | 43 | No | No | No | No | No | No | No | No | No | No |
| 7 | 4 | 100 | 2 | 47 | No | No | No | No | No | No | No | No | No | No |
| 8 | 4 | 182 | 2 | 85 | No | No | No | No | No | No | No | No | No | No |
| 9 | 4 | 319 | 2 | 150 | No | No | No | No | No | No | No | No | No | No |
| 10 | 4 | 328 | 2 | 154 | No | No | No | No | No | No | No | No | No | No |
| 11 | 4 | 328 | 2 | 154 | No | No | No | No | No | No | No | No | No | No |
| 12 | 4 | 355 | 2 | 166 | No | No | No | Yes | No | No | No | No | No | No |
| 13 | 4 | 392 | 2 | 183 | No | No | No | Yes | No | No | No | No | No | No |
| 14 | 4 | 410 | 2 | 192 | No | No | No | Yes | No | No | No | No | No | No |
| 15 | 4 | 410 | 2 | 192 | No | No | No | Yes | No | No | No | No | No | No |
| 16 | 4 | 437 | 2 | 205 | No | No | Yes | Yes | No | No | No | No | No | No |
| 17 | 4 | 546 | 2 | 257 | No | Yes | Yes | Yes | No | No | No | Yes | No | No |
| 18 | 4 | 573 | 2 | 269 | No | Yes | Yes | Yes | No | No | No | Yes | No | No |
| 19 | 4 | 618 | 2 | 290 | Yes | Yes | Yes | Yes | No | No | No | Yes | Yes | No |
| 20 | 4 | 691 | 2 | 325 | Yes | Yes | Yes | Yes | No | No | Yes | Yes | Yes | No |
| 21 | 4 | 728 | 2 | 342 | Yes | Yes | Yes | Yes | No | Yes | Yes | Yes | Yes | No |
| 22 | 4 | 855 | 2 | 401 | Yes | Yes | Yes | Yes | No | Yes | Yes | Yes | Yes | Yes |
| 23 | 4 | 874 | 2 | 410 | Yes | Yes | Yes | Yes | No | Yes | Yes | Yes | Yes | Yes |
| 24 | 4 | 910 | 2 | 427 | Yes | Yes | Yes | Yes | Yes | Yes | Yes | Yes | Yes | Yes |
| Hours Met | | | | | 6 | 8 | 9 | 13 | 1 | 4 | 5 | 8 | 6 | 3 |

## Warrant 3 Condition A

| Orientation | E | W |
|---|---|---|
| Total Stopped Delay Per Vehicle on Minor Approach (s) | 14.9 | 24 |
| Number of Lanes on Minor Street Approach | 1 | 1 |
| VehicleHours of Stopped Delay on Minor Approach ([h]h:mm) | 0:32 | 1:58 |
| Delay Condition Met | No | No |
| Volume on Minor Street Approach During Same Hour | 131 | 296 |
| High Minor Volume Condition Met | Yes | Yes |
| Total Entering Volume on All Approaches During Same Hour | 1337 | 1337 |
| Number of Approaches on Intersection | 4 | 4 |
| Total Volume Condition Met | Yes | Yes |
| Warrant Met for Approach | No | No |
| **Warrant Met for Intersection** | **No** | |

# Signal Warrants Report For Intersection 9: Locust Ave (NS) / Marygold Ave (EW)

## Warrants Summary

| Warrant | Name | Met? |
|---|---|---|
| #1 | Eight Hour Vehicular Volume | No |
| #2 | Four Hour Vehicular Volume | No |
| #3 | Peak Hour | No |

## Intersection Warrants Parameters

| | |
|---|---|
| Major Approaches | N, S |
| Minor Approaches | E, W |
| Speed > 40mph | No |
| Population < 10,000 | No |
| Warrant Factor | 100% |

## Warrant Analysis Traffic Volumes

| Hour | Major Streets | | Minor Streets | |
|---|---|---|---|---|
| | N | S | E | W |
| 1 | 184 | 384 | 73 | 217 |
| 2 | 177 | 369 | 70 | 208 |
| 3 | 173 | 361 | 69 | 204 |
| 4 | 147 | 307 | 58 | 174 |
| 5 | 140 | 292 | 55 | 165 |
| 6 | 125 | 261 | 50 | 148 |
| 7 | 116 | 242 | 46 | 137 |
| 8 | 110 | 230 | 44 | 130 |
| 9 | 88 | 184 | 35 | 104 |
| 10 | 83 | 173 | 33 | 98 |
| 11 | 83 | 173 | 33 | 98 |
| 12 | 79 | 165 | 31 | 93 |
| 13 | 72 | 150 | 28 | 85 |
| 14 | 66 | 138 | 26 | 78 |
| 15 | 66 | 138 | 26 | 78 |
| 16 | 64 | 134 | 26 | 76 |
| 17 | 37 | 77 | 15 | 43 |
| 18 | 20 | 42 | 8 | 24 |
| 19 | 18 | 38 | 7 | 22 |
| 20 | 7 | 15 | 3 | 9 |
| 21 | 6 | 12 | 2 | 7 |
| 22 | 6 | 12 | 2 | 7 |
| 23 | 4 | 8 | 1 | 4 |
| 24 | 4 | 8 | 1 | 4 |

## Warrant Analysis by Hour

| Hour | Major Lanes | | Minor Lanes | | Warrant 1 Condition A | | | | Warrant 1 Condition B | | | | Warrant 2 | Warrant 3 |
|---|---|---|---|---|---|---|---|---|---|---|---|---|---|---|
| | Number | Volume | Number | Volume | 100% | 80% | 70% | 56% | 100% | 80% | 70% | 56% | | Condition B |
| 1 | 4 | 568 | 2 | 290 | No | Yes | Yes | Yes | No | No | No | Yes | No | No |
| 2 | 4 | 546 | 2 | 278 | No | Yes | Yes | Yes | No | No | No | Yes | No | No |
| 3 | 4 | 534 | 2 | 273 | No | Yes | Yes | Yes | No | No | No | Yes | No | No |
| 4 | 4 | 454 | 2 | 232 | No | No | Yes | Yes | No | No | No | No | No | No |
| 5 | 4 | 432 | 2 | 220 | No | No | Yes | Yes | No | No | No | No | No | No |
| 6 | 4 | 386 | 2 | 198 | No | No | No | Yes | No | No | No | No | No | No |
| 7 | 4 | 358 | 2 | 183 | No | No | No | Yes | No | No | No | No | No | No |
| 8 | 4 | 340 | 2 | 174 | No | No | No | Yes | No | No | No | No | No | No |
| 9 | 4 | 272 | 2 | 139 | No | No | No | No | No | No | No | No | No | No |
| 10 | 4 | 256 | 2 | 131 | No | No | No | No | No | No | No | No | No | No |
| 11 | 4 | 256 | 2 | 131 | No | No | No | No | No | No | No | No | No | No |
| 12 | 4 | 244 | 2 | 124 | No | No | No | No | No | No | No | No | No | No |
| 13 | 4 | 222 | 2 | 113 | No | No | No | No | No | No | No | No | No | No |
| 14 | 4 | 204 | 2 | 104 | No | No | No | No | No | No | No | No | No | No |
| 15 | 4 | 204 | 2 | 104 | No | No | No | No | No | No | No | No | No | No |
| 16 | 4 | 198 | 2 | 102 | No | No | No | No | No | No | No | No | No | No |
| 17 | 4 | 114 | 2 | 58 | No | No | No | No | No | No | No | No | No | No |
| 18 | 4 | 62 | 2 | 32 | No | No | No | No | No | No | No | No | No | No |
| 19 | 4 | 56 | 2 | 29 | No | No | No | No | No | No | No | No | No | No |
| 20 | 4 | 22 | 2 | 12 | No | No | No | No | No | No | No | No | No | No |
| 21 | 4 | 18 | 2 | 9 | No | No | No | No | No | No | No | No | No | No |
| 22 | 4 | 18 | 2 | 9 | No | No | No | No | No | No | No | No | No | No |
| 23 | 4 | 12 | 2 | 5 | No | No | No | No | No | No | No | No | No | No |
| 24 | 4 | 12 | 2 | 5 | No | No | No | No | No | No | No | No | No | No |
| Hours Met | | | | | 0 | 3 | 5 | 8 | 0 | 0 | 0 | 3 | 0 | 0 |

## Warrant 3 Condition A

| Orientation | E | W |
|---|---|---|
| Total Stopped Delay Per Vehicle on Minor Approach (s) | 9.8 | 11.5 |
| Number of Lanes on Minor Street Approach | 1 | 1 |
| VehicleHours of Stopped Delay on Minor Approach ([h]h:mm) | 0:11 | 0:41 |
| Delay Condition Met | No | No |
| Volume on Minor Street Approach During Same Hour | 73 | 217 |
| High Minor Volume Condition Met | No | Yes |
| Total Entering Volume on All Approaches During Same Hour | 858 | 858 |
| Number of Approaches on Intersection | 4 | 4 |
| Total Volume Condition Met | Yes | Yes |
| Warrant Met for Approach | No | No |
| **Warrant Met for Intersection** | **No** | |

# Signal Warrants Report For Intersection 7: Alder Ave (NS) / Marygold Ave (EW)

## Warrants Summary

| Warrant | Name | Met? |
|---|---|---|
| #1 | Eight Hour Vehicular Volume | No |
| #2 | Four Hour Vehicular Volume | No |
| #3 | Peak Hour | No |

## Intersection Warrants Parameters

| | |
|---|---|
| Major Approaches | S, N |
| Minor Approaches | E, W |
| Speed > 40mph | No |
| Population < 10,000 | No |
| Warrant Factor | 100% |

## Warrant Analysis Traffic Volumes

| Hour | Major Streets | | Minor Streets | |
|---|---|---|---|---|
| | S | N | E | W |
| 1 | 7 | 16 | 0 | 2 |
| 2 | 7 | 16 | 0 | 2 |
| 3 | 10 | 23 | 1 | 3 |
| 4 | 10 | 23 | 1 | 3 |
| 5 | 13 | 31 | 1 | 4 |
| 6 | 33 | 78 | 2 | 10 |
| 7 | 36 | 86 | 2 | 11 |
| 8 | 66 | 156 | 4 | 19 |
| 9 | 115 | 274 | 7 | 34 |
| 10 | 118 | 282 | 7 | 35 |
| 11 | 118 | 282 | 7 | 35 |
| 12 | 128 | 305 | 8 | 38 |
| 13 | 141 | 336 | 9 | 42 |
| 14 | 148 | 352 | 9 | 44 |
| 15 | 148 | 352 | 9 | 44 |
| 16 | 158 | 375 | 10 | 47 |
| 17 | 197 | 469 | 12 | 58 |
| 18 | 207 | 493 | 13 | 61 |
| 19 | 224 | 532 | 14 | 66 |
| 20 | 250 | 594 | 15 | 74 |
| 21 | 263 | 626 | 16 | 78 |
| 22 | 309 | 735 | 19 | 91 |
| 23 | 316 | 751 | 19 | 93 |
| 24 | 329 | 782 | 20 | 97 |

## Warrant Analysis by Hour

| Hour | Major Lanes | | Minor Lanes | | Warrant 1 Condition A | | | | Warrant 1 Condition B | | | | Warrant 2 | Warrant 3 |
|---|---|---|---|---|---|---|---|---|---|---|---|---|---|---|
| | Number | Volume | Number | Volume | 100% | 80% | 70% | 56% | 100% | 80% | 70% | 56% | | Condition B |
| 1 | 4 | 23 | 2 | 2 | No | No | No | No | No | No | No | No | No | No |
| 2 | 4 | 23 | 2 | 2 | No | No | No | No | No | No | No | No | No | No |
| 3 | 4 | 33 | 2 | 4 | No | No | No | No | No | No | No | No | No | No |
| 4 | 4 | 33 | 2 | 4 | No | No | No | No | No | No | No | No | No | No |
| 5 | 4 | 44 | 2 | 5 | No | No | No | No | No | No | No | No | No | No |
| 6 | 4 | 111 | 2 | 12 | No | No | No | No | No | No | No | No | No | No |
| 7 | 4 | 122 | 2 | 13 | No | No | No | No | No | No | No | No | No | No |
| 8 | 4 | 222 | 2 | 23 | No | No | No | No | No | No | No | No | No | No |
| 9 | 4 | 389 | 2 | 41 | No | No | No | No | No | No | No | No | No | No |
| 10 | 4 | 400 | 2 | 42 | No | No | No | No | No | No | No | No | No | No |
| 11 | 4 | 400 | 2 | 42 | No | No | No | No | No | No | No | No | No | No |
| 12 | 4 | 433 | 2 | 46 | No | No | No | No | No | No | No | No | No | No |
| 13 | 4 | 477 | 2 | 51 | No | No | No | No | No | No | No | No | No | No |
| 14 | 4 | 500 | 2 | 53 | No | No | No | No | No | No | No | No | No | No |
| 15 | 4 | 500 | 2 | 53 | No | No | No | No | No | No | No | No | No | No |
| 16 | 4 | 533 | 2 | 57 | No | No | No | No | No | No | No | Yes | No | No |
| 17 | 4 | 666 | 2 | 70 | No | No | No | No | No | No | Yes | Yes | No | No |
| 18 | 4 | 700 | 2 | 74 | No | No | No | No | No | No | Yes | Yes | No | No |
| 19 | 4 | 756 | 2 | 80 | No | No | No | No | No | Yes | Yes | Yes | No | No |
| 20 | 4 | 844 | 2 | 89 | No | No | No | No | No | Yes | Yes | Yes | No | No |
| 21 | 4 | 889 | 2 | 94 | No | No | No | No | No | Yes | Yes | Yes | No | No |
| 22 | 4 | 1044 | 2 | 110 | No | No | No | Yes | Yes | Yes | Yes | Yes | Yes | No |
| 23 | 4 | 1067 | 2 | 112 | No | No | No | Yes | Yes | Yes | Yes | Yes | Yes | No |
| 24 | 4 | 1111 | 2 | 117 | No | No | No | Yes | Yes | Yes | Yes | Yes | Yes | No |
| Hours Met | | | | | 0 | 0 | 0 | 3 | 3 | 6 | 8 | 9 | 3 | 0 |

## Warrant 3 Condition A

| Orientation | E | W |
|---|---|---|
| Total Stopped Delay Per Vehicle on Minor Approach (s) | 10 | 11 |
| Number of Lanes on Minor Street Approach | 1 | 1 |
| VehicleHours of Stopped Delay on Minor Approach ([h]h:mm) | 0:03 | 0:17 |
| Delay Condition Met | No | No |
| Volume on Minor Street Approach During Same Hour | 20 | 97 |
| High Minor Volume Condition Met | No | No |
| Total Entering Volume on All Approaches During Same Hour | 1228 | 1228 |
| Number of Approaches on Intersection | 4 | 4 |
| Total Volume Condition Met | Yes | Yes |
| Warrant Met for Approach | No | No |
| **Warrant Met for Intersection** | **No** | |

# Signal Warrants Report For Intersection 9: Locust Ave (NS) / Marygold Ave (EW)

## Warrants Summary

| Warrant | Name | Met? |
|---|---|---|
| #1 | Eight Hour Vehicular Volume | No |
| #2 | Four Hour Vehicular Volume | No |
| #3 | Peak Hour | No |

## Intersection Warrants Parameters

| | |
|---|---|
| Major Approaches | N, S |
| Minor Approaches | E, W |
| Speed > 40mph | No |
| Population < 10,000 | No |
| Warrant Factor | 100% |

## Warrant Analysis Traffic Volumes

| Hour | Major Streets | | Minor Streets | |
|---|---|---|---|---|
| | N | S | E | W |
| 1 | 350 | 154 | 102 | 66 |
| 2 | 336 | 148 | 98 | 63 |
| 3 | 329 | 145 | 96 | 62 |
| 4 | 280 | 123 | 82 | 53 |
| 5 | 266 | 117 | 78 | 50 |
| 6 | 238 | 105 | 69 | 45 |
| 7 | 221 | 97 | 64 | 42 |
| 8 | 210 | 92 | 61 | 40 |
| 9 | 168 | 74 | 49 | 32 |
| 10 | 158 | 69 | 46 | 30 |
| 11 | 158 | 69 | 46 | 30 |
| 12 | 151 | 66 | 44 | 28 |
| 13 | 137 | 60 | 40 | 26 |
| 14 | 126 | 55 | 37 | 24 |
| 15 | 126 | 55 | 37 | 24 |
| 16 | 122 | 54 | 36 | 23 |
| 17 | 70 | 31 | 20 | 13 |
| 18 | 39 | 17 | 11 | 7 |
| 19 | 35 | 15 | 10 | 7 |
| 20 | 14 | 6 | 4 | 3 |
| 21 | 11 | 5 | 3 | 2 |
| 22 | 11 | 5 | 3 | 2 |
| 23 | 7 | 3 | 2 | 1 |
| 24 | 7 | 3 | 2 | 1 |

## Warrant Analysis by Hour

| Hour | Major Lanes | | Minor Lanes | | Warrant 1 Condition A | | | | Warrant 1 Condition B | | | | Warrant 2 | Warrant 3 |
|---|---|---|---|---|---|---|---|---|---|---|---|---|---|---|
| | Number | Volume | Number | Volume | 100% | 80% | 70% | 56% | 100% | 80% | 70% | 56% | | Condition B |
| 1 | 4 | 504 | 2 | 168 | No | No | No | Yes | No | No | No | Yes | No | No |
| 2 | 4 | 484 | 2 | 161 | No | No | No | Yes | No | No | No | No | No | No |
| 3 | 4 | 474 | 2 | 158 | No | No | No | Yes | No | No | No | No | No | No |
| 4 | 4 | 403 | 2 | 135 | No | No | No | No | No | No | No | No | No | No |
| 5 | 4 | 383 | 2 | 128 | No | No | No | No | No | No | No | No | No | No |
| 6 | 4 | 343 | 2 | 114 | No | No | No | No | No | No | No | No | No | No |
| 7 | 4 | 318 | 2 | 106 | No | No | No | No | No | No | No | No | No | No |
| 8 | 4 | 302 | 2 | 101 | No | No | No | No | No | No | No | No | No | No |
| 9 | 4 | 242 | 2 | 81 | No | No | No | No | No | No | No | No | No | No |
| 10 | 4 | 227 | 2 | 76 | No | No | No | No | No | No | No | No | No | No |
| 11 | 4 | 227 | 2 | 76 | No | No | No | No | No | No | No | No | No | No |
| 12 | 4 | 217 | 2 | 72 | No | No | No | No | No | No | No | No | No | No |
| 13 | 4 | 197 | 2 | 66 | No | No | No | No | No | No | No | No | No | No |
| 14 | 4 | 181 | 2 | 61 | No | No | No | No | No | No | No | No | No | No |
| 15 | 4 | 181 | 2 | 61 | No | No | No | No | No | No | No | No | No | No |
| 16 | 4 | 176 | 2 | 59 | No | No | No | No | No | No | No | No | No | No |
| 17 | 4 | 101 | 2 | 33 | No | No | No | No | No | No | No | No | No | No |
| 18 | 4 | 56 | 2 | 18 | No | No | No | No | No | No | No | No | No | No |
| 19 | 4 | 50 | 2 | 17 | No | No | No | No | No | No | No | No | No | No |
| 20 | 4 | 20 | 2 | 7 | No | No | No | No | No | No | No | No | No | No |
| 21 | 4 | 16 | 2 | 5 | No | No | No | No | No | No | No | No | No | No |
| 22 | 4 | 16 | 2 | 5 | No | No | No | No | No | No | No | No | No | No |
| 23 | 4 | 10 | 2 | 3 | No | No | No | No | No | No | No | No | No | No |
| 24 | 4 | 10 | 2 | 3 | No | No | No | No | No | No | No | No | No | No |
| Hours Met | | | | | 0 | 0 | 0 | 3 | 0 | 0 | 0 | 1 | 0 | 0 |

## Warrant 3 Condition A

| Orientation | E | W |
|---|---|---|
| Total Stopped Delay Per Vehicle on Minor Approach (s) | 9.3 | 8.9 |
| Number of Lanes on Minor Street Approach | 1 | 1 |
| VehicleHours of Stopped Delay on Minor Approach ([h]h:mm) | 0:15 | 0:09 |
| Delay Condition Met | No | No |
| Volume on Minor Street Approach During Same Hour | 102 | 66 |
| High Minor Volume Condition Met | Yes | No |
| Total Entering Volume on All Approaches During Same Hour | 672 | 672 |
| Number of Approaches on Intersection | 4 | 4 |
| Total Volume Condition Met | No | No |
| Warrant Met for Approach | No | No |
| **Warrant Met for Intersection** | **No** | |

# Signal Warrants Report For Intersection 7: Alder Ave (NS) / Marygold Ave (EW)

## Warrants Summary

| Warrant | Name | Met? |
|---|---|---|
| #1 | Eight Hour Vehicular Volume | Yes |
| #2 | Four Hour Vehicular Volume | Yes |
| #3 | Peak Hour | Yes |

## Intersection Warrants Parameters

| | |
|---|---|
| Major Approaches | S, N |
| Minor Approaches | E, W |
| Speed > 40mph | No |
| Population < 10,000 | No |
| Warrant Factor | 100% |

## Warrant Analysis Traffic Volumes

| Hour | Major Streets | | Minor Streets | |
|---|---|---|---|---|
| | S | N | E | W |
| 1 | 15 | 11 | 0 | 5 |
| 2 | 15 | 11 | 0 | 5 |
| 3 | 22 | 17 | 1 | 8 |
| 4 | 22 | 17 | 1 | 8 |
| 5 | 30 | 23 | 1 | 11 |
| 6 | 74 | 57 | 2 | 27 |
| 7 | 82 | 63 | 2 | 29 |
| 8 | 149 | 114 | 4 | 53 |
| 9 | 260 | 199 | 7 | 93 |
| 10 | 267 | 205 | 7 | 95 |
| 11 | 267 | 205 | 7 | 95 |
| 12 | 290 | 222 | 8 | 103 |
| 13 | 319 | 245 | 9 | 114 |
| 14 | 334 | 256 | 9 | 119 |
| 15 | 334 | 256 | 9 | 119 |
| 16 | 357 | 273 | 10 | 127 |
| 17 | 446 | 341 | 12 | 159 |
| 18 | 468 | 358 | 13 | 167 |
| 19 | 505 | 387 | 14 | 180 |
| 20 | 565 | 432 | 15 | 201 |
| 21 | 594 | 455 | 16 | 212 |
| 22 | 698 | 535 | 19 | 249 |
| 23 | 713 | 546 | 19 | 254 |
| 24 | 743 | 569 | 20 | 265 |

## Warrant Analysis by Hour

| Hour | Major Lanes | | Minor Lanes | | Warrant 1 Condition A | | | | Warrant 1 Condition B | | | | Warrant 2 | Warrant 3 |
|---|---|---|---|---|---|---|---|---|---|---|---|---|---|---|
| | Number | Volume | Number | Volume | 100% | 80% | 70% | 56% | 100% | 80% | 70% | 56% | | Condition B |
| 1 | 4 | 26 | 2 | 5 | No | No | No | No | No | No | No | No | No | No |
| 2 | 4 | 26 | 2 | 5 | No | No | No | No | No | No | No | No | No | No |
| 3 | 4 | 39 | 2 | 9 | No | No | No | No | No | No | No | No | No | No |
| 4 | 4 | 39 | 2 | 9 | No | No | No | No | No | No | No | No | No | No |
| 5 | 4 | 53 | 2 | 12 | No | No | No | No | No | No | No | No | No | No |
| 6 | 4 | 131 | 2 | 29 | No | No | No | No | No | No | No | No | No | No |
| 7 | 4 | 145 | 2 | 31 | No | No | No | No | No | No | No | No | No | No |
| 8 | 4 | 263 | 2 | 57 | No | No | No | No | No | No | No | No | No | No |
| 9 | 4 | 459 | 2 | 100 | No | No | No | Yes | No | No | No | No | No | No |
| 10 | 4 | 472 | 2 | 102 | No | No | No | Yes | No | No | No | No | No | No |
| 11 | 4 | 472 | 2 | 102 | No | No | No | Yes | No | No | No | No | No | No |
| 12 | 4 | 512 | 2 | 111 | No | No | No | Yes | No | No | No | Yes | No | No |
| 13 | 4 | 564 | 2 | 123 | No | No | Yes | Yes | No | No | No | Yes | No | No |
| 14 | 4 | 590 | 2 | 128 | No | No | Yes | Yes | No | No | No | Yes | No | No |
| 15 | 4 | 590 | 2 | 128 | No | No | Yes | Yes | No | No | No | Yes | No | No |
| 16 | 4 | 630 | 2 | 137 | No | Yes | Yes | Yes | No | No | Yes | Yes | No | No |
| 17 | 4 | 787 | 2 | 171 | Yes | Yes | Yes | Yes | No | Yes | Yes | Yes | Yes | No |
| 18 | 4 | 826 | 2 | 180 | Yes | Yes | Yes | Yes | No | Yes | Yes | Yes | Yes | No |
| 19 | 4 | 892 | 2 | 194 | Yes | Yes | Yes | Yes | No | Yes | Yes | Yes | Yes | No |
| 20 | 4 | 997 | 2 | 216 | Yes | Yes | Yes | Yes | Yes | Yes | Yes | Yes | Yes | Yes |
| 21 | 4 | 1049 | 2 | 228 | Yes | Yes | Yes | Yes | Yes | Yes | Yes | Yes | Yes | Yes |
| 22 | 4 | 1233 | 2 | 268 | Yes | Yes | Yes | Yes | Yes | Yes | Yes | Yes | Yes | Yes |
| 23 | 4 | 1259 | 2 | 273 | Yes | Yes | Yes | Yes | Yes | Yes | Yes | Yes | Yes | Yes |
| 24 | 4 | 1312 | 2 | 285 | Yes | Yes | Yes | Yes | Yes | Yes | Yes | Yes | Yes | Yes |
| Hours Met | | | | | 8 | 9 | 12 | 16 | 5 | 8 | 9 | 13 | 8 | 5 |

## Warrant 3 Condition A

| Orientation | E | W |
|---|---|---|
| Total Stopped Delay Per Vehicle on Minor Approach (s) | 11.5 | 18.9 |
| Number of Lanes on Minor Street Approach | 1 | 1 |
| VehicleHours of Stopped Delay on Minor Approach ([h]h:mm) | 0:03 | 1:23 |
| Delay Condition Met | No | No |
| Volume on Minor Street Approach During Same Hour | 20 | 265 |
| High Minor Volume Condition Met | No | Yes |
| Total Entering Volume on All Approaches During Same Hour | 1597 | 1597 |
| Number of Approaches on Intersection | 4 | 4 |
| Total Volume Condition Met | Yes | Yes |
| Warrant Met for Approach | No | No |
| **Warrant Met for Intersection** | **No** | |

# Signal Warrants Report For Intersection 9: Locust Ave (NS) / Marygold Ave (EW)

## Warrants Summary

| Warrant | Name | Met? |
|---|---|---|
| #1 | Eight Hour Vehicular Volume | No |
| #2 | Four Hour Vehicular Volume | No |
| #3 | Peak Hour | No |

## Intersection Warrants Parameters

| | |
|---|---|
| Major Approaches | N, S |
| Minor Approaches | E, W |
| Speed > 40mph | No |
| Population < 10,000 | No |
| Warrant Factor | 100% |

## Warrant Analysis Traffic Volumes

| Hour | Major Streets | | Minor Streets | |
|---|---|---|---|---|
| | N | S | E | W |
| 1 | 220 | 536 | 75 | 165 |
| 2 | 211 | 515 | 72 | 158 |
| 3 | 207 | 504 | 71 | 155 |
| 4 | 176 | 429 | 60 | 132 |
| 5 | 167 | 407 | 57 | 125 |
| 6 | 150 | 364 | 51 | 112 |
| 7 | 139 | 338 | 47 | 104 |
| 8 | 132 | 322 | 45 | 99 |
| 9 | 106 | 257 | 36 | 79 |
| 10 | 99 | 241 | 34 | 74 |
| 11 | 99 | 241 | 34 | 74 |
| 12 | 95 | 230 | 32 | 71 |
| 13 | 86 | 209 | 29 | 64 |
| 14 | 79 | 193 | 27 | 59 |
| 15 | 79 | 193 | 27 | 59 |
| 16 | 77 | 188 | 26 | 58 |
| 17 | 44 | 107 | 15 | 33 |
| 18 | 24 | 59 | 8 | 18 |
| 19 | 22 | 54 | 8 | 17 |
| 20 | 9 | 21 | 3 | 7 |
| 21 | 7 | 16 | 2 | 5 |
| 22 | 7 | 16 | 2 | 5 |
| 23 | 4 | 11 | 2 | 3 |
| 24 | 4 | 11 | 2 | 3 |

## Warrant Analysis by Hour

| Hour | Major Lanes | | Minor Lanes | | Warrant 1 Condition A | | | | Warrant 1 Condition B | | | | Warrant 2 | Warrant 3 |
|---|---|---|---|---|---|---|---|---|---|---|---|---|---|---|
| | Number | Volume | Number | Volume | 100% | 80% | 70% | 56% | 100% | 80% | 70% | 56% | | Condition B |
| 1 | 4 | 756 | 2 | 240 | Yes | Yes | Yes | Yes | No | Yes | Yes | Yes | Yes | No |
| 2 | 4 | 726 | 2 | 230 | Yes | Yes | Yes | Yes | No | Yes | Yes | Yes | Yes | No |
| 3 | 4 | 711 | 2 | 226 | Yes | Yes | Yes | Yes | No | No | Yes | Yes | Yes | No |
| 4 | 4 | 605 | 2 | 192 | No | Yes | Yes | Yes | No | No | No | Yes | No | No |
| 5 | 4 | 574 | 2 | 182 | No | Yes | Yes | Yes | No | No | No | Yes | No | No |
| 6 | 4 | 514 | 2 | 163 | No | No | Yes | Yes | No | No | No | Yes | No | No |
| 7 | 4 | 477 | 2 | 151 | No | No | No | Yes | No | No | No | No | No | No |
| 8 | 4 | 454 | 2 | 144 | No | No | No | Yes | No | No | No | No | No | No |
| 9 | 4 | 363 | 2 | 115 | No | No | No | No | No | No | No | No | No | No |
| 10 | 4 | 340 | 2 | 108 | No | No | No | No | No | No | No | No | No | No |
| 11 | 4 | 340 | 2 | 108 | No | No | No | No | No | No | No | No | No | No |
| 12 | 4 | 325 | 2 | 103 | No | No | No | No | No | No | No | No | No | No |
| 13 | 4 | 295 | 2 | 93 | No | No | No | No | No | No | No | No | No | No |
| 14 | 4 | 272 | 2 | 86 | No | No | No | No | No | No | No | No | No | No |
| 15 | 4 | 272 | 2 | 86 | No | No | No | No | No | No | No | No | No | No |
| 16 | 4 | 265 | 2 | 84 | No | No | No | No | No | No | No | No | No | No |
| 17 | 4 | 151 | 2 | 48 | No | No | No | No | No | No | No | No | No | No |
| 18 | 4 | 83 | 2 | 26 | No | No | No | No | No | No | No | No | No | No |
| 19 | 4 | 76 | 2 | 25 | No | No | No | No | No | No | No | No | No | No |
| 20 | 4 | 30 | 2 | 10 | No | No | No | No | No | No | No | No | No | No |
| 21 | 4 | 23 | 2 | 7 | No | No | No | No | No | No | No | No | No | No |
| 22 | 4 | 23 | 2 | 7 | No | No | No | No | No | No | No | No | No | No |
| 23 | 4 | 15 | 2 | 5 | No | No | No | No | No | No | No | No | No | No |
| 24 | 4 | 15 | 2 | 5 | No | No | No | No | No | No | No | No | No | No |
| Hours Met | | | | | 3 | 5 | 6 | 8 | 0 | 2 | 3 | 6 | 3 | 0 |

## Warrant 3 Condition A

| Orientation | E | W |
|---|---|---|
| Total Stopped Delay Per Vehicle on Minor Approach (s) | 10.3 | 12 |
| Number of Lanes on Minor Street Approach | 1 | 1 |
| VehicleHours of Stopped Delay on Minor Approach ([h]h:mm) | 0:12 | 0:32 |
| Delay Condition Met | No | No |
| Volume on Minor Street Approach During Same Hour | 75 | 165 |
| High Minor Volume Condition Met | No | Yes |
| Total Entering Volume on All Approaches During Same Hour | 996 | 996 |
| Number of Approaches on Intersection | 4 | 4 |
| Total Volume Condition Met | Yes | Yes |
| Warrant Met for Approach | No | No |
| **Warrant Met for Intersection** | **No** | |

# Signal Warrants Report For Intersection 7: Alder Ave (NS) / Marygold Ave (EW)

## Warrants Summary

| Warrant | Name | Met? |
|---|---|---|
| #1 | Eight Hour Vehicular Volume | No |
| #2 | Four Hour Vehicular Volume | Yes |
| #3 | Peak Hour | Yes |

## Intersection Warrants Parameters

| | |
|---|---|
| Major Approaches | S, N |
| Minor Approaches | E, W |
| Speed > 40mph | No |
| Population < 10,000 | No |
| Warrant Factor | 100% |

## Warrant Analysis Traffic Volumes

| Hour | Major Streets | | Minor Streets | |
|---|---|---|---|---|
| | S | N | E | W |
| 1 | 7 | 17 | 2 | 2 |
| 2 | 7 | 17 | 2 | 2 |
| 3 | 11 | 25 | 2 | 3 |
| 4 | 11 | 25 | 2 | 3 |
| 5 | 15 | 33 | 3 | 4 |
| 6 | 36 | 83 | 8 | 11 |
| 7 | 40 | 91 | 8 | 12 |
| 8 | 73 | 166 | 15 | 22 |
| 9 | 127 | 291 | 26 | 39 |
| 10 | 131 | 299 | 27 | 40 |
| 11 | 131 | 299 | 27 | 40 |
| 12 | 142 | 324 | 29 | 43 |
| 13 | 157 | 357 | 32 | 47 |
| 14 | 164 | 374 | 34 | 50 |
| 15 | 164 | 374 | 34 | 50 |
| 16 | 175 | 398 | 36 | 53 |
| 17 | 218 | 498 | 45 | 66 |
| 18 | 229 | 523 | 47 | 69 |
| 19 | 248 | 564 | 51 | 75 |
| 20 | 277 | 631 | 57 | 84 |
| 21 | 291 | 664 | 60 | 88 |
| 22 | 342 | 780 | 71 | 103 |
| 23 | 349 | 797 | 72 | 106 |
| 24 | 364 | 830 | 75 | 110 |

## Warrant Analysis by Hour

| Hour | Major Lanes | | Minor Lanes | | Warrant 1 Condition A | | | | Warrant 1 Condition B | | | | Warrant 2 | Warrant 3 |
|---|---|---|---|---|---|---|---|---|---|---|---|---|---|---|
| | Number | Volume | Number | Volume | 100% | 80% | 70% | 56% | 100% | 80% | 70% | 56% | | Condition B |
| 1 | 4 | 24 | 2 | 4 | No | No | No | No | No | No | No | No | No | No |
| 2 | 4 | 24 | 2 | 4 | No | No | No | No | No | No | No | No | No | No |
| 3 | 4 | 36 | 2 | 5 | No | No | No | No | No | No | No | No | No | No |
| 4 | 4 | 36 | 2 | 5 | No | No | No | No | No | No | No | No | No | No |
| 5 | 4 | 48 | 2 | 7 | No | No | No | No | No | No | No | No | No | No |
| 6 | 4 | 119 | 2 | 19 | No | No | No | No | No | No | No | No | No | No |
| 7 | 4 | 131 | 2 | 20 | No | No | No | No | No | No | No | No | No | No |
| 8 | 4 | 239 | 2 | 37 | No | No | No | No | No | No | No | No | No | No |
| 9 | 4 | 418 | 2 | 65 | No | No | No | No | No | No | No | No | No | No |
| 10 | 4 | 430 | 2 | 67 | No | No | No | No | No | No | No | No | No | No |
| 11 | 4 | 430 | 2 | 67 | No | No | No | No | No | No | No | No | No | No |
| 12 | 4 | 466 | 2 | 72 | No | No | No | No | No | No | No | No | No | No |
| 13 | 4 | 514 | 2 | 79 | No | No | No | No | No | No | No | Yes | No | No |
| 14 | 4 | 538 | 2 | 84 | No | No | No | No | No | No | No | Yes | No | No |
| 15 | 4 | 538 | 2 | 84 | No | No | No | No | No | No | No | Yes | No | No |
| 16 | 4 | 573 | 2 | 89 | No | No | No | No | No | No | No | Yes | No | No |
| 17 | 4 | 716 | 2 | 111 | No | No | No | No | No | No | Yes | Yes | No | No |
| 18 | 4 | 752 | 2 | 116 | No | No | No | No | No | Yes | Yes | Yes | No | No |
| 19 | 4 | 812 | 2 | 126 | No | No | No | No | No | Yes | Yes | Yes | No | No |
| 20 | 4 | 908 | 2 | 141 | No | No | No | Yes | Yes | Yes | Yes | Yes | Yes | No |
| 21 | 4 | 955 | 2 | 148 | No | No | No | Yes | Yes | Yes | Yes | Yes | Yes | No |
| 22 | 4 | 1122 | 2 | 174 | No | No | No | Yes | Yes | Yes | Yes | Yes | Yes | Yes |
| 23 | 4 | 1146 | 2 | 178 | No | No | Yes | Yes | Yes | Yes | Yes | Yes | Yes | Yes |
| 24 | 4 | 1194 | 2 | 185 | No | No | Yes | Yes | Yes | Yes | Yes | Yes | Yes | Yes |
| Hours Met | | | | | 0 | 0 | 2 | 5 | 5 | 7 | 8 | 12 | 5 | 3 |

## Warrant 3 Condition A

| Orientation | E | W |
|---|---|---|
| Total Stopped Delay Per Vehicle on Minor Approach (s) | 11.4 | 11.8 |
| Number of Lanes on Minor Street Approach | 1 | 1 |
| VehicleHours of Stopped Delay on Minor Approach ([h]h:mm) | 0:14 | 0:21 |
| Delay Condition Met | No | No |
| Volume on Minor Street Approach During Same Hour | 75 | 110 |
| High Minor Volume Condition Met | No | Yes |
| Total Entering Volume on All Approaches During Same Hour | 1379 | 1379 |
| Number of Approaches on Intersection | 4 | 4 |
| Total Volume Condition Met | Yes | Yes |
| Warrant Met for Approach | No | No |
| **Warrant Met for Intersection** | **No** | |

# Signal Warrants Report For Intersection 9: Locust Ave (NS) / Marygold Ave (EW)

## Warrants Summary

| Warrant | Name | Met? |
|---|---|---|
| #1 | Eight Hour Vehicular Volume | No |
| #2 | Four Hour Vehicular Volume | No |
| #3 | Peak Hour | No |

## Intersection Warrants Parameters

| | |
|---|---|
| Major Approaches | N, S |
| Minor Approaches | E, W |
| Speed > 40mph | No |
| Population < 10,000 | No |
| Warrant Factor | 100% |

## Warrant Analysis Traffic Volumes

| Hour | Major Streets | | Minor Streets | |
|---|---|---|---|---|
| | N | S | E | W |
| 1 | 361 | 189 | 138 | 128 |
| 2 | 347 | 181 | 132 | 123 |
| 3 | 339 | 178 | 130 | 120 |
| 4 | 289 | 151 | 110 | 102 |
| 5 | 274 | 144 | 105 | 97 |
| 6 | 245 | 129 | 94 | 87 |
| 7 | 227 | 119 | 87 | 81 |
| 8 | 217 | 113 | 83 | 77 |
| 9 | 173 | 91 | 66 | 61 |
| 10 | 162 | 85 | 62 | 58 |
| 11 | 162 | 85 | 62 | 58 |
| 12 | 155 | 81 | 59 | 55 |
| 13 | 141 | 74 | 54 | 50 |
| 14 | 130 | 68 | 50 | 46 |
| 15 | 130 | 68 | 50 | 46 |
| 16 | 126 | 66 | 48 | 45 |
| 17 | 72 | 38 | 28 | 26 |
| 18 | 40 | 21 | 15 | 14 |
| 19 | 36 | 19 | 14 | 13 |
| 20 | 14 | 8 | 6 | 5 |
| 21 | 11 | 6 | 4 | 4 |
| 22 | 11 | 6 | 4 | 4 |
| 23 | 7 | 4 | 3 | 3 |
| 24 | 7 | 4 | 3 | 3 |

## Warrant Analysis by Hour

| Hour | Major Lanes | | Minor Lanes | | Warrant 1 Condition A | | | | Warrant 1 Condition B | | | | Warrant 2 | Warrant 3 |
|---|---|---|---|---|---|---|---|---|---|---|---|---|---|---|
| | Number | Volume | Number | Volume | 100% | 80% | 70% | 56% | 100% | 80% | 70% | 56% | | Condition B |
| 1 | 4 | 550 | 2 | 266 | No | Yes | Yes | Yes | No | No | No | Yes | No | No |
| 2 | 4 | 528 | 2 | 255 | No | Yes | Yes | Yes | No | No | No | Yes | No | No |
| 3 | 4 | 517 | 2 | 250 | No | Yes | Yes | Yes | No | No | No | Yes | No | No |
| 4 | 4 | 440 | 2 | 212 | No | No | Yes | Yes | No | No | No | No | No | No |
| 5 | 4 | 418 | 2 | 202 | No | No | No | Yes | No | No | No | No | No | No |
| 6 | 4 | 374 | 2 | 181 | No | No | No | Yes | No | No | No | No | No | No |
| 7 | 4 | 346 | 2 | 168 | No | No | No | Yes | No | No | No | No | No | No |
| 8 | 4 | 330 | 2 | 160 | No | No | No | No | No | No | No | No | No | No |
| 9 | 4 | 264 | 2 | 127 | No | No | No | No | No | No | No | No | No | No |
| 10 | 4 | 247 | 2 | 120 | No | No | No | No | No | No | No | No | No | No |
| 11 | 4 | 247 | 2 | 120 | No | No | No | No | No | No | No | No | No | No |
| 12 | 4 | 236 | 2 | 114 | No | No | No | No | No | No | No | No | No | No |
| 13 | 4 | 215 | 2 | 104 | No | No | No | No | No | No | No | No | No | No |
| 14 | 4 | 198 | 2 | 96 | No | No | No | No | No | No | No | No | No | No |
| 15 | 4 | 198 | 2 | 96 | No | No | No | No | No | No | No | No | No | No |
| 16 | 4 | 192 | 2 | 93 | No | No | No | No | No | No | No | No | No | No |
| 17 | 4 | 110 | 2 | 54 | No | No | No | No | No | No | No | No | No | No |
| 18 | 4 | 61 | 2 | 29 | No | No | No | No | No | No | No | No | No | No |
| 19 | 4 | 55 | 2 | 27 | No | No | No | No | No | No | No | No | No | No |
| 20 | 4 | 22 | 2 | 11 | No | No | No | No | No | No | No | No | No | No |
| 21 | 4 | 17 | 2 | 8 | No | No | No | No | No | No | No | No | No | No |
| 22 | 4 | 17 | 2 | 8 | No | No | No | No | No | No | No | No | No | No |
| 23 | 4 | 11 | 2 | 6 | No | No | No | No | No | No | No | No | No | No |
| 24 | 4 | 11 | 2 | 6 | No | No | No | No | No | No | No | No | No | No |
| Hours Met | | | | | 0 | 3 | 4 | 7 | 0 | 0 | 0 | 3 | 0 | 0 |

## Warrant 3 Condition A

| Orientation | E | W |
|---|---|---|
| Total Stopped Delay Per Vehicle on Minor Approach (s) | 10.5 | 9.8 |
| Number of Lanes on Minor Street Approach | 1 | 1 |
| VehicleHours of Stopped Delay on Minor Approach ([h]h:mm) | 0:24 | 0:20 |
| Delay Condition Met | No | No |
| Volume on Minor Street Approach During Same Hour | 138 | 128 |
| High Minor Volume Condition Met | Yes | Yes |
| Total Entering Volume on All Approaches During Same Hour | 816 | 816 |
| Number of Approaches on Intersection | 4 | 4 |
| Total Volume Condition Met | Yes | Yes |
| Warrant Met for Approach | No | No |
| **Warrant Met for Intersection** | **No** | |

# Signal Warrants Report For Intersection 7: Alder Ave (NS) / Marygold Ave (EW)

## Warrants Summary

| Warrant | Name | Met? |
|---|---|---|
| #1 | Eight Hour Vehicular Volume | Yes |
| #2 | Four Hour Vehicular Volume | Yes |
| #3 | Peak Hour | Yes |

## Intersection Warrants Parameters

| | |
|---|---|
| Major Approaches | S, N |
| Minor Approaches | E, W |
| Speed > 40mph | No |
| Population < 10,000 | No |
| Warrant Factor | 100% |

## Warrant Analysis Traffic Volumes

| Hour | Major Streets | | Minor Streets | |
|---|---|---|---|---|
| | S | N | E | W |
| 1 | 17 | 12 | 1 | 6 |
| 2 | 17 | 12 | 1 | 6 |
| 3 | 25 | 18 | 1 | 8 |
| 4 | 25 | 18 | 1 | 8 |
| 5 | 33 | 24 | 2 | 11 |
| 6 | 84 | 61 | 5 | 28 |
| 7 | 92 | 67 | 5 | 31 |
| 8 | 167 | 122 | 9 | 56 |
| 9 | 293 | 214 | 16 | 98 |
| 10 | 301 | 220 | 17 | 101 |
| 11 | 301 | 220 | 17 | 101 |
| 12 | 326 | 238 | 18 | 109 |
| 13 | 360 | 262 | 20 | 120 |
| 14 | 377 | 275 | 21 | 126 |
| 15 | 377 | 275 | 21 | 126 |
| 16 | 402 | 293 | 23 | 134 |
| 17 | 502 | 366 | 28 | 168 |
| 18 | 527 | 384 | 30 | 176 |
| 19 | 569 | 415 | 32 | 190 |
| 20 | 636 | 464 | 36 | 213 |
| 21 | 670 | 488 | 38 | 224 |
| 22 | 787 | 573 | 44 | 263 |
| 23 | 804 | 586 | 45 | 269 |
| 24 | 837 | 610 | 47 | 280 |

## Warrant Analysis by Hour

| Hour | Major Lanes | | Minor Lanes | | Warrant 1 Condition A | | | | Warrant 1 Condition B | | | | Warrant 2 | Warrant 3 |
|---|---|---|---|---|---|---|---|---|---|---|---|---|---|---|
| | Number | Volume | Number | Volume | 100% | 80% | 70% | 56% | 100% | 80% | 70% | 56% | | Condition B |
| 1 | 4 | 29 | 2 | 7 | No | No | No | No | No | No | No | No | No | No |
| 2 | 4 | 29 | 2 | 7 | No | No | No | No | No | No | No | No | No | No |
| 3 | 4 | 43 | 2 | 9 | No | No | No | No | No | No | No | No | No | No |
| 4 | 4 | 43 | 2 | 9 | No | No | No | No | No | No | No | No | No | No |
| 5 | 4 | 57 | 2 | 13 | No | No | No | No | No | No | No | No | No | No |
| 6 | 4 | 145 | 2 | 33 | No | No | No | No | No | No | No | No | No | No |
| 7 | 4 | 159 | 2 | 36 | No | No | No | No | No | No | No | No | No | No |
| 8 | 4 | 289 | 2 | 65 | No | No | No | No | No | No | No | No | No | No |
| 9 | 4 | 507 | 2 | 114 | No | No | No | Yes | No | No | No | Yes | No | No |
| 10 | 4 | 521 | 2 | 118 | No | No | No | Yes | No | No | No | Yes | No | No |
| 11 | 4 | 521 | 2 | 118 | No | No | No | Yes | No | No | No | Yes | No | No |
| 12 | 4 | 564 | 2 | 127 | No | No | Yes | Yes | No | No | No | Yes | No | No |
| 13 | 4 | 622 | 2 | 140 | No | Yes | Yes | Yes | No | No | No | Yes | No | No |
| 14 | 4 | 652 | 2 | 147 | No | Yes | Yes | Yes | No | No | Yes | Yes | No | No |
| 15 | 4 | 652 | 2 | 147 | No | Yes | Yes | Yes | No | No | Yes | Yes | No | No |
| 16 | 4 | 695 | 2 | 157 | No | Yes | Yes | Yes | No | No | Yes | Yes | Yes | No |
| 17 | 4 | 868 | 2 | 196 | Yes | Yes | Yes | Yes | No | Yes | Yes | Yes | Yes | No |
| 18 | 4 | 911 | 2 | 206 | Yes | Yes | Yes | Yes | Yes | Yes | Yes | Yes | Yes | Yes |
| 19 | 4 | 984 | 2 | 222 | Yes | Yes | Yes | Yes | Yes | Yes | Yes | Yes | Yes | Yes |
| 20 | 4 | 1100 | 2 | 249 | Yes | Yes | Yes | Yes | Yes | Yes | Yes | Yes | Yes | Yes |
| 21 | 4 | 1158 | 2 | 262 | Yes | Yes | Yes | Yes | Yes | Yes | Yes | Yes | Yes | Yes |
| 22 | 4 | 1360 | 2 | 307 | Yes | Yes | Yes | Yes | Yes | Yes | Yes | Yes | Yes | Yes |
| 23 | 4 | 1390 | 2 | 314 | Yes | Yes | Yes | Yes | Yes | Yes | Yes | Yes | Yes | Yes |
| 24 | 4 | 1447 | 2 | 327 | Yes | Yes | Yes | Yes | Yes | Yes | Yes | Yes | Yes | Yes |
| Hours Met | | | | | 8 | 12 | 13 | 16 | 7 | 8 | 11 | 16 | 9 | 7 |

## Warrant 3 Condition A

| Orientation | E | W |
|---|---|---|
| Total Stopped Delay Per Vehicle on Minor Approach (s) | 12.8 | 21.6 |
| Number of Lanes on Minor Street Approach | 1 | 1 |
| VehicleHours of Stopped Delay on Minor Approach ([h]h:mm) | 0:09 | 1:40 |
| Delay Condition Met | No | No |
| Volume on Minor Street Approach During Same Hour | 47 | 280 |
| High Minor Volume Condition Met | No | Yes |
| Total Entering Volume on All Approaches During Same Hour | 1774 | 1774 |
| Number of Approaches on Intersection | 4 | 4 |
| Total Volume Condition Met | Yes | Yes |
| Warrant Met for Approach | No | No |
| **Warrant Met for Intersection** | **No** | |

# Signal Warrants Report For Intersection 9: Locust Ave (NS) / Marygold Ave (EW)

## Warrants Summary

| Warrant | Name | Met? |
|---|---|---|
| #1 | Eight Hour Vehicular Volume | No |
| #2 | Four Hour Vehicular Volume | Yes |
| #3 | Peak Hour | No |

## Intersection Warrants Parameters

| | |
|---|---|
| Major Approaches | N, S |
| Minor Approaches | E, W |
| Speed > 40mph | No |
| Population < 10,000 | No |
| Warrant Factor | 100% |

## Warrant Analysis Traffic Volumes

| Hour | Major Streets | | Minor Streets | |
|---|---|---|---|---|
| | N | S | E | W |
| 1 | 230 | 609 | 97 | 206 |
| 2 | 221 | 585 | 93 | 198 |
| 3 | 216 | 572 | 91 | 194 |
| 4 | 184 | 487 | 78 | 165 |
| 5 | 175 | 463 | 74 | 157 |
| 6 | 156 | 414 | 66 | 140 |
| 7 | 145 | 384 | 61 | 130 |
| 8 | 138 | 365 | 58 | 124 |
| 9 | 110 | 292 | 47 | 99 |
| 10 | 104 | 274 | 44 | 93 |
| 11 | 104 | 274 | 44 | 93 |
| 12 | 99 | 262 | 42 | 89 |
| 13 | 90 | 238 | 38 | 80 |
| 14 | 83 | 219 | 35 | 74 |
| 15 | 83 | 219 | 35 | 74 |
| 16 | 81 | 213 | 34 | 72 |
| 17 | 46 | 122 | 19 | 41 |
| 18 | 25 | 67 | 11 | 23 |
| 19 | 23 | 61 | 10 | 21 |
| 20 | 9 | 24 | 4 | 8 |
| 21 | 7 | 18 | 3 | 6 |
| 22 | 7 | 18 | 3 | 6 |
| 23 | 5 | 12 | 2 | 4 |
| 24 | 5 | 12 | 2 | 4 |

## Warrant Analysis by Hour

| Hour | Major Lanes | | Minor Lanes | | Warrant 1 Condition A | | | | Warrant 1 Condition B | | | | Warrant 2 | Warrant 3 |
|---|---|---|---|---|---|---|---|---|---|---|---|---|---|---|
| | Number | Volume | Number | Volume | 100% | 80% | 70% | 56% | 100% | 80% | 70% | 56% | | Condition B |
| 1 | 4 | 839 | 2 | 303 | Yes | Yes | Yes | Yes | No | Yes | Yes | Yes | Yes | No |
| 2 | 4 | 806 | 2 | 291 | Yes | Yes | Yes | Yes | No | Yes | Yes | Yes | Yes | No |
| 3 | 4 | 788 | 2 | 285 | Yes | Yes | Yes | Yes | No | Yes | Yes | Yes | Yes | No |
| 4 | 4 | 671 | 2 | 243 | Yes | Yes | Yes | Yes | No | No | Yes | Yes | Yes | No |
| 5 | 4 | 638 | 2 | 231 | Yes | Yes | Yes | Yes | No | No | Yes | Yes | No | No |
| 6 | 4 | 570 | 2 | 206 | No | Yes | Yes | Yes | No | No | No | Yes | No | No |
| 7 | 4 | 529 | 2 | 191 | No | Yes | Yes | Yes | No | No | No | Yes | No | No |
| 8 | 4 | 503 | 2 | 182 | No | Yes | Yes | Yes | No | No | No | No | No | No |
| 9 | 4 | 402 | 2 | 146 | No | No | No | Yes | No | No | No | No | No | No |
| 10 | 4 | 378 | 2 | 137 | No | No | No | Yes | No | No | No | No | No | No |
| 11 | 4 | 378 | 2 | 137 | No | No | No | Yes | No | No | No | No | No | No |
| 12 | 4 | 361 | 2 | 131 | No | No | No | Yes | No | No | No | No | No | No |
| 13 | 4 | 328 | 2 | 118 | No | No | No | No | No | No | No | No | No | No |
| 14 | 4 | 302 | 2 | 109 | No | No | No | No | No | No | No | No | No | No |
| 15 | 4 | 302 | 2 | 109 | No | No | No | No | No | No | No | No | No | No |
| 16 | 4 | 294 | 2 | 106 | No | No | No | No | No | No | No | No | No | No |
| 17 | 4 | 168 | 2 | 60 | No | No | No | No | No | No | No | No | No | No |
| 18 | 4 | 92 | 2 | 34 | No | No | No | No | No | No | No | No | No | No |
| 19 | 4 | 84 | 2 | 31 | No | No | No | No | No | No | No | No | No | No |
| 20 | 4 | 33 | 2 | 12 | No | No | No | No | No | No | No | No | No | No |
| 21 | 4 | 25 | 2 | 9 | No | No | No | No | No | No | No | No | No | No |
| 22 | 4 | 25 | 2 | 9 | No | No | No | No | No | No | No | No | No | No |
| 23 | 4 | 17 | 2 | 6 | No | No | No | No | No | No | No | No | No | No |
| 24 | 4 | 17 | 2 | 6 | No | No | No | No | No | No | No | No | No | No |
| Hours Met | | | | | 5 | 8 | 8 | 12 | 0 | 3 | 5 | 7 | 4 | 0 |

## Warrant 3 Condition A

| Orientation | E | W |
|---|---|---|
| Total Stopped Delay Per Vehicle on Minor Approach (s) | 11.5 | 13.7 |
| Number of Lanes on Minor Street Approach | 1 | 1 |
| VehicleHours of Stopped Delay on Minor Approach ([h]h:mm) | 0:18 | 0:47 |
| Delay Condition Met | No | No |
| Volume on Minor Street Approach During Same Hour | 97 | 206 |
| High Minor Volume Condition Met | No | Yes |
| Total Entering Volume on All Approaches During Same Hour | 1142 | 1142 |
| Number of Approaches on Intersection | 4 | 4 |
| Total Volume Condition Met | Yes | Yes |
| Warrant Met for Approach | No | No |
| **Warrant Met for Intersection** | **No** | |

# APPENDIX D

# Existing
# Level of Service Calculations

**Intersection Level Of Service Report**
**Intersection 1: Sierra Ave (NS) / San Bernardino Ave (EW)**

| | | | |
|---|---|---|---|
| Control Type: | Signalized | Delay (sec / veh): | 28.7 |
| Analysis Method: | HCM 2010 | Level Of Service: | C |
| Analysis Period: | 15 minutes | Volume to Capacity (v/c): | 0.612 |

**Intersection Setup**

| Name | Sierra Avenue | | | Sierra Avenue | | | San Bernardino Avenue | | | San Bernardino Avenue | | |
|---|---|---|---|---|---|---|---|---|---|---|---|---|
| Approach | Northbound | | | Southbound | | | Eastbound | | | Westbound | | |
| Lane Configuration | | | | | | | | | | | | |
| Turning Movement | Left | Thru | Right | Left | Thru | Right | Left | Thru | Right | Left | Thru | Right |
| Lane Width [ft] | 12.00 | 12.00 | 12.00 | 12.00 | 12.00 | 12.00 | 12.00 | 12.00 | 12.00 | 12.00 | 12.00 | 12.00 |
| No. of Lanes in Pocket | 1 | 0 | 1 | 1 | 0 | 0 | 1 | 0 | 0 | 1 | 0 | 0 |
| Pocket Length [ft] | 140.00 | 100.00 | 140.00 | 150.00 | 100.00 | 100.00 | 150.00 | 100.00 | 100.00 | 240.00 | 100.00 | 100.00 |
| Speed [mph] | 35.00 | | | 35.00 | | | 35.00 | | | 30.00 | | |
| Grade [%] | 0.00 | | | 0.00 | | | 0.00 | | | 0.00 | | |
| Crosswalk | Yes | | | Yes | | | Yes | | | Yes | | |

**volumes**

| Name | Sierra Avenue | | | Sierra Avenue | | | San Bernardino Avenue | | | San Bernardino Avenue | | |
|---|---|---|---|---|---|---|---|---|---|---|---|---|
| Base Volume Input [veh/h] | 51 | 621 | 106 | 34 | 893 | 35 | 47 | 193 | 74 | 223 | 186 | 27 |
| Base Volume Adjustment Factor | 1.0000 | 1.0000 | 1.0000 | 1.0000 | 1.0000 | 1.0000 | 1.0000 | 1.0000 | 1.0000 | 1.0000 | 1.0000 | 1.0000 |
| Heavy Vehicles Percentage [%] | 2.00 | 2.00 | 2.00 | 2.00 | 2.00 | 2.00 | 2.00 | 2.00 | 2.00 | 2.00 | 2.00 | 2.00 |
| Growth Rate | 1.00 | 1.00 | 1.00 | 1.00 | 1.00 | 1.00 | 1.00 | 1.00 | 1.00 | 1.00 | 1.00 | 1.00 |
| In-Process Volume [veh/h] | 0 | 0 | 0 | 0 | 0 | 0 | 0 | 0 | 0 | 0 | 0 | 0 |
| Site-Generated Trips [veh/h] | 0 | 0 | 0 | 0 | 0 | 0 | 0 | 0 | 0 | 0 | 0 | 0 |
| Diverted Trips [veh/h] | 0 | 0 | 0 | 0 | 0 | 0 | 0 | 0 | 0 | 0 | 0 | 0 |
| Pass-by Trips [veh/h] | 0 | 0 | 0 | 0 | 0 | 0 | 0 | 0 | 0 | 0 | 0 | 0 |
| Existing Site Adjustment Volume [veh/h] | 0 | 0 | 0 | 0 | 0 | 0 | 0 | 0 | 0 | 0 | 0 | 0 |
| Other Volume [veh/h] | 0 | 0 | 0 | 0 | 0 | 0 | 0 | 0 | 0 | 0 | 0 | 0 |
| Right-Turn on Red Volume [veh/h] | 0 | 0 | 0 | 0 | 0 | 0 | 0 | 0 | 0 | 0 | 0 | 0 |
| Total Hourly Volume [veh/h] | 51 | 621 | 106 | 34 | 893 | 35 | 47 | 193 | 74 | 223 | 186 | 27 |
| Peak Hour Factor | 0.9020 | 0.9020 | 0.9020 | 0.9020 | 0.9200 | 0.9020 | 0.9020 | 0.9020 | 0.9020 | 0.9020 | 0.9020 | 0.9020 |
| Other Adjustment Factor | 1.0000 | 1.0000 | 1.0000 | 1.0000 | 1.0000 | 1.0000 | 1.0000 | 1.0000 | 1.0000 | 1.0000 | 1.0000 | 1.0000 |
| Total 15-Minute Volume [veh/h] | 14 | 172 | 29 | 9 | 243 | 10 | 13 | 53 | 21 | 62 | 52 | 7 |
| Total Analysis Volume [veh/h] | 57 | 688 | 118 | 38 | 971 | 39 | 52 | 214 | 82 | 247 | 206 | 30 |
| Presence of On-Street Parking | No | | No | No | | No | No | | No | No | | No |
| On-Street Parking Maneuver Rate [/h] | 0 | 0 | 0 | 0 | 0 | 0 | 0 | 0 | 0 | 0 | 0 | 0 |
| Local Bus Stopping Rate [/h] | 0 | 0 | 0 | 0 | 0 | 0 | 0 | 0 | 0 | 0 | 0 | 0 |
| Pedestrian Volume [ped/h] | 0 | | | 0 | | | 0 | | | 0 | | |
| Bicycle Volume [bicycles/h] | 0 | | | 0 | | | 0 | | | 0 | | |

**Intersection Settings**

| | |
|---|---|
| Located in CBD | No |
| Signal Coordination Group | 1 - NS - Sierra |
| Cycle Length [s] | 120 |
| Coordination Type | Time of Day Pattern Coordinated |
| Actuation Type | Fully actuated |
| Offset [s] | 0.0 |
| Offset Reference | LagFO |
| Permissive Mode | SingleBand |
| Lost time [s] | 16.00 |

**Phasing & Timing**

| Control Type | Protecte | Permiss | Permiss | Protecte | Permiss | Permiss | Protecte | Permiss | Permiss | Protecte | Permiss | Permiss |
|---|---|---|---|---|---|---|---|---|---|---|---|---|
| Signal group | 5 | 2 | 0 | 1 | 6 | 0 | 3 | 8 | 0 | 7 | 4 | 0 |
| Auxiliary Signal Groups | | | | | | | | | | | | |
| Lead / Lag | Lead | - | - | Lead | - | - | Lead | - | - | Lead | - | - |
| Minimum Green [s] | 5 | 5 | 0 | 5 | 5 | 0 | 5 | 5 | 0 | 5 | 5 | 0 |
| Maximum Green [s] | 30 | 30 | 0 | 30 | 30 | 0 | 30 | 30 | 0 | 30 | 30 | 0 |
| Amber [s] | 4.1 | 4.1 | 0.0 | 4.1 | 4.1 | 0.0 | 4.1 | 4.1 | 0.0 | 3.7 | 3.7 | 0.0 |
| All red [s] | 1.0 | 1.0 | 0.0 | 1.0 | 1.0 | 0.0 | 1.0 | 1.0 | 0.0 | 1.0 | 1.0 | 0.0 |
| Split [s] | 11 | 46 | 0 | 11 | 46 | 0 | 18 | 41 | 0 | 22 | 45 | 0 |
| Vehicle Extension [s] | 3.0 | 3.0 | 0.0 | 3.0 | 3.0 | 0.0 | 3.0 | 3.0 | 0.0 | 3.0 | 3.0 | 0.0 |
| Walk [s] | 0 | 7 | 0 | 0 | 7 | 0 | 0 | 7 | 0 | 0 | 7 | 0 |
| Pedestrian Clearance [s] | 0 | 22 | 0 | 0 | 23 | 0 | 0 | 28 | 0 | 0 | 25 | 0 |
| I1, Start-Up Lost Time [s] | 2.0 | 2.0 | 0.0 | 2.0 | 2.0 | 0.0 | 2.0 | 2.0 | 0.0 | 2.0 | 2.0 | 0.0 |
| I2, Clearance Lost Time [s] | 3.1 | 3.1 | 0.0 | 3.1 | 3.1 | 0.0 | 3.1 | 3.1 | 0.0 | 2.7 | 2.7 | 0.0 |
| Minimum Recall | No | No | | No | No | | No | No | | No | No | |
| Maximum Recall | No | No | | No | No | | No | No | | No | No | |
| Pedestrian Recall | No | No | | No | No | | No | No | | No | No | |
| Detector Location [ft] | 0.0 | 0.0 | 0.0 | 0.0 | 0.0 | 0.0 | 0.0 | 0.0 | 0.0 | 0.0 | 0.0 | 0.0 |
| Detector Length [ft] | 0.0 | 0.0 | 0.0 | 0.0 | 0.0 | 0.0 | 0.0 | 0.0 | 0.0 | 0.0 | 0.0 | 0.0 |
| I, Upstream Filtering Factor | 1.00 | 1.00 | 1.00 | 1.00 | 1.00 | 1.00 | 1.00 | 1.00 | 1.00 | 1.00 | 1.00 | 1.00 |

**Exclusive Pedestrian Phase**

| | |
|---|---|
| Pedestrian Signal Group | 0 |
| Pedestrian Walk [s] | 0 |
| Pedestrian Clearance [s] | 0 |

**Lane Group Calculations**

| Lane Group | L | C | R | L | C | C | L | C | C | L | C | C |
|---|---|---|---|---|---|---|---|---|---|---|---|---|
| L, Total Lost Time per Cycle [s] | 5.10 | 5.10 | 5.10 | 5.10 | 5.10 | 5.10 | 5.10 | 5.10 | 5.10 | 4.70 | 4.70 | 4.70 |
| l1_p, Permitted Start-Up Lost Time [s] | 0.00 | 0.00 | 0.00 | 0.00 | 0.00 | 0.00 | 0.00 | 0.00 | 0.00 | 0.00 | 0.00 | 0.00 |
| l2, Clearance Lost Time [s] | 3.10 | 3.10 | 3.10 | 3.10 | 3.10 | 3.10 | 3.10 | 3.10 | 3.10 | 2.70 | 2.70 | 2.70 |
| g_i, Effective Green Time [s] | 5 | 66 | 66 | 4 | 65 | 65 | 5 | 13 | 13 | 17 | 25 | 25 |
| g / C, Green / Cycle | 0.04 | 0.55 | 0.55 | 0.03 | 0.54 | 0.54 | 0.04 | 0.11 | 0.11 | 0.14 | 0.21 | 0.21 |
| (v / s)_i Volume / Saturation Flow Rate | 0.03 | 0.19 | 0.07 | 0.02 | 0.27 | 0.27 | 0.03 | 0.08 | 0.08 | 0.14 | 0.06 | 0.07 |
| s, saturation flow rate [veh/h] | 1700 | 3600 | 1800 | 1774 | 1863 | 1838 | 1774 | 1863 | 1692 | 1774 | 1863 | 1781 |
| c, Capacity [veh/h] | 73 | 1989 | 995 | 55 | 1006 | 993 | 69 | 197 | 179 | 256 | 394 | 377 |
| d1, Uniform Delay [s] | 56.02 | 8.14 | 7.37 | 57.01 | 9.73 | 9.73 | 57.16 | 52.30 | 52.49 | 51.05 | 39.91 | 39.94 |
| k, delay calibration | 0.11 | 0.50 | 0.50 | 0.11 | 0.50 | 0.50 | 0.11 | 0.11 | 0.11 | 0.37 | 0.11 | 0.11 |
| I, Upstream Filtering Factor | 1.00 | 1.00 | 1.00 | 1.00 | 1.00 | 1.00 | 1.00 | 1.00 | 1.00 | 1.00 | 1.00 | 1.00 |
| d2, Incremental Delay [s] | 16.03 | 0.48 | 0.24 | 14.62 | 1.81 | 1.84 | 15.49 | 6.38 | 8.19 | 40.07 | 0.43 | 0.46 |
| d3, Initial Queue Delay [s] | 0.00 | 0.00 | 0.00 | 0.00 | 0.00 | 0.00 | 0.00 | 0.00 | 0.00 | 0.00 | 0.00 | 0.00 |
| Rp, platoon ratio | 1.33 | 1.33 | 1.33 | 1.33 | 1.33 | 1.33 | 1.00 | 1.00 | 1.00 | 1.00 | 1.00 | 1.00 |
| PF, progression factor | 1.00 | 1.00 | 1.00 | 1.00 | 1.00 | 1.00 | 1.00 | 1.00 | 1.00 | 1.00 | 1.00 | 1.00 |

**Lane Group Results**

| | | | | | | | | | | | | |
|---|---|---|---|---|---|---|---|---|---|---|---|---|
| X, volume / capacity | 0.78 | 0.35 | 0.12 | 0.69 | 0.51 | 0.51 | 0.76 | 0.77 | 0.80 | 0.96 | 0.30 | 0.31 |
| d, Delay for Lane Group [s/veh] | 72.05 | 8.62 | 7.62 | 71.64 | 11.54 | 11.57 | 72.65 | 58.68 | 60.68 | 91.12 | 40.34 | 40.40 |
| Lane Group LOS | E | A | A | E | B | B | E | E | E | F | D | D |
| Critical Lane Group | Yes | No | No | No | No | Yes | No | No | Yes | Yes | No | No |
| 50th-Percentile Queue Length [veh] | 2.00 | 2.81 | 0.92 | 1.34 | 5.02 | 4.96 | 1.85 | 4.78 | 4.60 | 10.21 | 3.05 | 2.95 |
| 50th-Percentile Queue Length [ft] | 49.98 | 70.31 | 22.90 | 33.62 | 125.45 | 123.93 | 46.17 | 119.47 | 115.11 | 255.32 | 76.24 | 73.84 |
| 95th-Percentile Queue Length [veh] | 3.60 | 5.06 | 1.65 | 2.42 | 8.69 | 8.61 | 3.32 | 8.36 | 8.12 | 15.45 | 5.49 | 5.32 |
| 95th-Percentile Queue Length [ft] | 89.97 | 126.55 | 41.23 | 60.51 | 217.29 | 215.22 | 83.10 | 209.09 | 203.08 | 386.35 | 137.23 | 132.91 |

**Movement, Approach, & Intersection Results**

| | | | | | | | | | | | | |
|---|---|---|---|---|---|---|---|---|---|---|---|---|
| d_M, Delay for Movement [s/veh] | 72.05 | 8.62 | 7.62 | 71.64 | 11.56 | 11.57 | 72.65 | 59.26 | 60.68 | 91.12 | 40.37 | 40.40 |
| Movement LOS | E | A | A | E | B | B | E | E | E | F | D | D |
| d_A, Approach Delay [s/veh] | 12.67 | | | 13.74 | | | 61.59 | | | 66.32 | | |
| Approach LOS | B | | | B | | | E | | | E | | |
| d_I, Intersection Delay [s/veh] | 28.74 | | | | | | | | | | | |
| Intersection LOS | C | | | | | | | | | | | |
| Intersection V/C | 0.612 | | | | | | | | | | | |

## Sequence

| | | | | | | | | | | | | | | | | |
|---|---|---|---|---|---|---|---|---|---|---|---|---|---|---|---|---|
| Ring 1 | 1 | 2 | 3 | 4 | - | - | - | - | - | - | - | - | - | - | - | - |
| Ring 2 | 5 | 6 | 7 | 8 | - | - | - | - | - | - | - | - | - | - | - | - |
| Ring 3 | - | - | - | - | - | - | - | - | - | - | - | - | - | - | - | - |
| Ring 4 | - | - | - | - | - | - | - | - | - | - | - | - | - | - | - | - |

**Intersection Level Of Service Report**
**Intersection 2: Sierra Ave (NS) / Valley Blvd (EW)**

| | | | |
|---|---|---|---|
| Control Type: | Signalized | Delay (sec / veh): | 27.9 |
| Analysis Method: | HCM 2010 | Level Of Service: | C |
| Analysis Period: | 15 minutes | Volume to Capacity (v/c): | 0.902 |

**Intersection Setup**

| Name | Sierra Avenue | | | Sierra Avenue | | | Valley Boulevard | | | Valley Boulevard | | |
|---|---|---|---|---|---|---|---|---|---|---|---|---|
| Approach | Northbound | | | Southbound | | | Eastbound | | | Westbound | | |
| Lane Configuration | | | | | | | | | | | | |
| Turning Movement | Left | Thru | Right | Left | Thru | Right | Left | Thru | Right | Left | Thru | Right |
| Lane Width [ft] | 12.00 | 12.00 | 12.00 | 12.00 | 12.00 | 12.00 | 12.00 | 12.00 | 12.00 | 12.00 | 12.00 | 12.00 |
| No. of Lanes in Pocket | 2 | 0 | 0 | 2 | 0 | 0 | 2 | 0 | 0 | 2 | 0 | 0 |
| Pocket Length [ft] | 370.00 | 100.00 | 100.00 | 165.00 | 100.00 | 100.00 | 260.00 | 100.00 | 100.00 | 355.00 | 100.00 | 100.00 |
| Speed [mph] | 35.00 | | | 35.00 | | | 40.00 | | | 40.00 | | |
| Grade [%] | 0.00 | | | 0.00 | | | 0.00 | | | 0.00 | | |
| Crosswalk | Yes | | | Yes | | | Yes | | | Yes | | |

**volumes**

| Name | Sierra Avenue | | | Sierra Avenue | | | Valley Boulevard | | | Valley Boulevard | | |
|---|---|---|---|---|---|---|---|---|---|---|---|---|
| Base Volume Input [veh/h] | 169 | 1085 | 948 | 58 | 1252 | 74 | 96 | 240 | 293 | 590 | 300 | 97 |
| Base Volume Adjustment Factor | 1.0000 | 1.0000 | 1.0000 | 1.0000 | 1.0000 | 1.0000 | 1.0000 | 1.0000 | 1.0000 | 1.0000 | 1.0000 | 1.0000 |
| Heavy Vehicles Percentage [%] | 2.00 | 2.00 | 2.00 | 2.00 | 2.00 | 2.00 | 4.00 | 4.00 | 4.00 | 4.00 | 4.00 | 4.00 |
| Growth Rate | 1.00 | 1.00 | 1.00 | 1.00 | 1.00 | 1.00 | 1.00 | 1.00 | 1.00 | 1.00 | 1.00 | 1.00 |
| In-Process Volume [veh/h] | 0 | 0 | 0 | 0 | 0 | 0 | 0 | 0 | 0 | 0 | 0 | 0 |
| Site-Generated Trips [veh/h] | 0 | 0 | 0 | 0 | 0 | 0 | 0 | 0 | 0 | 0 | 0 | 0 |
| Diverted Trips [veh/h] | 0 | 0 | 0 | 0 | 0 | 0 | 0 | 0 | 0 | 0 | 0 | 0 |
| Pass-by Trips [veh/h] | 0 | 0 | 0 | 0 | 0 | 0 | 0 | 0 | 0 | 0 | 0 | 0 |
| Existing Site Adjustment Volume [veh/h] | 0 | 0 | 0 | 0 | 0 | 0 | 0 | 0 | 0 | 0 | 0 | 0 |
| Other Volume [veh/h] | 0 | 0 | 0 | 0 | 0 | 0 | 0 | 0 | 0 | 0 | 0 | 0 |
| Right-Turn on Red Volume [veh/h] | 0 | 0 | 0 | 0 | 0 | 0 | 0 | 0 | 0 | 0 | 0 | 0 |
| Total Hourly Volume [veh/h] | 169 | 1085 | 948 | 58 | 1252 | 74 | 96 | 240 | 293 | 590 | 300 | 97 |
| Peak Hour Factor | 0.9720 | 0.9720 | 0.9720 | 0.9720 | 0.9720 | 0.9720 | 0.9720 | 0.9720 | 0.9720 | 0.9720 | 0.9720 | 0.9720 |
| Other Adjustment Factor | 1.0000 | 1.0000 | 1.0000 | 1.0000 | 1.0000 | 1.0000 | 1.0000 | 1.0000 | 1.0000 | 1.0000 | 1.0000 | 1.0000 |
| Total 15-Minute Volume [veh/h] | 43 | 279 | 244 | 15 | 322 | 19 | 25 | 62 | 75 | 152 | 77 | 25 |
| Total Analysis Volume [veh/h] | 174 | 1116 | 975 | 60 | 1288 | 76 | 99 | 247 | 301 | 607 | 309 | 100 |
| Presence of On-Street Parking | No | | No | No | | No | No | | No | No | | No |
| On-Street Parking Maneuver Rate [/h] | 0 | 0 | 0 | 0 | 0 | 0 | 0 | 0 | 0 | 0 | 0 | 0 |
| Local Bus Stopping Rate [/h] | 0 | 0 | 0 | 0 | 0 | 0 | 0 | 0 | 0 | 0 | 0 | 0 |
| Pedestrian Volume [ped/h] | 0 | | | 0 | | | 0 | | | 0 | | |
| Bicycle Volume [bicycles/h] | 0 | | | 0 | | | 0 | | | 0 | | |

**Intersection Settings**

| | |
|---|---|
| Located in CBD | No |
| Signal Coordination Group | 1 - NS - Sierra |
| Cycle Length [s] | 120 |
| Coordination Type | Time of Day Pattern Coordinated |
| Actuation Type | Fully actuated |
| Offset [s] | 73.0 |
| Offset Reference | LagFO |
| Permissive Mode | SingleBand |
| Lost time [s] | 16.00 |

**Phasing & Timing**

| Control Type | Protecte | Permiss | Overlap | Protecte | Permiss | Permiss | Protecte | Permiss | Overlap | Protecte | Permiss | Overlap |
|---|---|---|---|---|---|---|---|---|---|---|---|---|
| Signal group | 5 | 2 | 2 | 1 | 6 | 0 | 3 | 8 | 8 | 7 | 4 | 4 |
| Auxiliary Signal Groups | | | 2,7 | | | | | | 5,8 | | | 1,4 |
| Lead / Lag | Lead | - | - | Lead | - | - | Lead | - | - | Lead | - | - |
| Minimum Green [s] | 5 | 5 | 5 | 5 | 5 | 0 | 5 | 5 | 5 | 5 | 5 | 5 |
| Maximum Green [s] | 30 | 30 | 30 | 30 | 30 | 0 | 30 | 30 | 30 | 30 | 30 | 30 |
| Amber [s] | 4.1 | 4.1 | 4.1 | 4.1 | 4.1 | 0.0 | 4.4 | 4.4 | 4.4 | 4.4 | 4.4 | 4.4 |
| All red [s] | 1.0 | 1.0 | 1.0 | 1.0 | 1.0 | 0.0 | 1.0 | 1.0 | 1.0 | 1.0 | 1.0 | 1.0 |
| Split [s] | 14 | 60 | 60 | 11 | 57 | 0 | 12 | 21 | 21 | 28 | 37 | 37 |
| Vehicle Extension [s] | 3.0 | 3.0 | 3.0 | 3.0 | 3.0 | 0.0 | 3.0 | 3.0 | 3.0 | 3.0 | 3.0 | 3.0 |
| Walk [s] | 0 | 7 | 7 | 0 | 7 | 0 | 0 | 5 | 5 | 0 | 5 | 5 |
| Pedestrian Clearance [s] | 0 | 24 | 24 | 0 | 26 | 0 | 0 | 10 | 10 | 0 | 10 | 10 |
| I1, Start-Up Lost Time [s] | 2.0 | 2.0 | 2.0 | 2.0 | 2.0 | 0.0 | 2.0 | 2.0 | 2.0 | 2.0 | 2.0 | 2.0 |
| I2, Clearance Lost Time [s] | 3.1 | 3.1 | 3.1 | 3.1 | 3.1 | 0.0 | 3.4 | 3.4 | 3.4 | 3.4 | 3.4 | 3.4 |
| Minimum Recall | No | No | No | No | No | | No | No | No | No | No | No |
| Maximum Recall | No | No | No | No | No | | No | No | No | No | No | No |
| Pedestrian Recall | No | No | No | No | No | | No | No | No | No | No | No |
| Detector Location [ft] | 0.0 | 0.0 | 0.0 | 0.0 | 0.0 | 0.0 | 0.0 | 0.0 | 0.0 | 0.0 | 0.0 | 0.0 |
| Detector Length [ft] | 0.0 | 0.0 | 0.0 | 0.0 | 0.0 | 0.0 | 0.0 | 0.0 | 0.0 | 0.0 | 0.0 | 0.0 |
| I, Upstream Filtering Factor | 1.00 | 1.00 | 1.00 | 1.00 | 1.00 | 1.00 | 1.00 | 1.00 | 1.00 | 1.00 | 1.00 | 1.00 |

**Exclusive Pedestrian Phase**

| | |
|---|---|
| Pedestrian Signal Group | 0 |
| Pedestrian Walk [s] | 0 |
| Pedestrian Clearance [s] | 0 |

**Lane Group Calculations**

| Lane Group | L | C | R | L | C | C | L | C | R | L | C | R |
|---|---|---|---|---|---|---|---|---|---|---|---|---|
| L, Total Lost Time per Cycle [s] | 5.10 | 5.10 | 5.40 | 5.10 | 5.10 | 5.10 | 5.40 | 5.40 | 5.10 | 5.40 | 5.40 | 5.10 |
| l1_p, Permitted Start-Up Lost Time [s] | 0.00 | 0.00 | 0.00 | 0.00 | 0.00 | 0.00 | 0.00 | 0.00 | 0.00 | 0.00 | 0.00 | 0.00 |
| l2, Clearance Lost Time [s] | 3.10 | 3.10 | 0.00 | 3.10 | 3.10 | 3.10 | 3.40 | 3.40 | 0.00 | 3.40 | 3.40 | 0.00 |
| g_i, Effective Green Time [s] | 9 | 59 | 87 | 6 | 56 | 56 | 5 | 11 | 25 | 23 | 28 | 40 |
| g / C, Green / Cycle | 0.07 | 0.49 | 0.73 | 0.05 | 0.47 | 0.47 | 0.04 | 0.09 | 0.21 | 0.19 | 0.24 | 0.33 |
| (v / s)_i Volume / Saturation Flow Rate | 0.05 | 0.31 | 0.62 | 0.02 | 0.25 | 0.25 | 0.03 | 0.07 | 0.19 | 0.18 | 0.09 | 0.06 |
| s, saturation flow rate [veh/h] | 3445 | 3547 | 1583 | 3445 | 3547 | 1810 | 3379 | 3478 | 1553 | 3379 | 3478 | 1553 |
| c, Capacity [veh/h] | 260 | 1750 | 1147 | 175 | 1663 | 849 | 153 | 322 | 331 | 637 | 820 | 514 |
| d1, Uniform Delay [s] | 52.59 | 14.21 | 0.80 | 54.12 | 15.23 | 15.23 | 55.51 | 51.42 | 41.93 | 44.45 | 34.34 | 23.75 |
| k, delay calibration | 0.11 | 0.50 | 0.50 | 0.11 | 0.50 | 0.50 | 0.11 | 0.11 | 0.50 | 0.11 | 0.11 | 0.39 |
| I, Upstream Filtering Factor | 1.00 | 1.00 | 1.00 | 1.00 | 1.00 | 1.00 | 1.00 | 1.00 | 1.00 | 1.00 | 1.00 | 1.00 |
| d2, Incremental Delay [s] | 2.97 | 1.79 | 7.95 | 1.16 | 1.28 | 2.49 | 4.51 | 3.86 | 31.24 | 8.72 | 0.29 | 0.66 |
| d3, Initial Queue Delay [s] | 0.00 | 0.00 | 0.00 | 0.00 | 0.00 | 0.00 | 0.00 | 0.00 | 0.00 | 0.00 | 0.00 | 0.00 |
| Rp, platoon ratio | 1.33 | 1.33 | 1.33 | 1.33 | 1.33 | 1.33 | 1.33 | 1.33 | 1.33 | 1.33 | 1.33 | 1.33 |
| PF, progression factor | 1.00 | 1.00 | 1.00 | 1.00 | 1.00 | 1.00 | 1.00 | 1.00 | 1.00 | 1.00 | 1.00 | 1.00 |

**Lane Group Results**

| | | | | | | | | | | | | |
|---|---|---|---|---|---|---|---|---|---|---|---|---|
| X, volume / capacity | 0.67 | 0.64 | 0.85 | 0.34 | 0.54 | 0.54 | 0.65 | 0.77 | 0.91 | 0.95 | 0.38 | 0.19 |
| d, Delay for Lane Group [s/veh] | 55.57 | 16.00 | 8.75 | 55.28 | 16.50 | 17.72 | 60.02 | 55.28 | 73.16 | 53.17 | 34.62 | 24.41 |
| Lane Group LOS | E | B | A | E | B | B | E | E | E | D | C | C |
| Critical Lane Group | No | No | Yes | Yes | No | No | No | No | Yes | Yes | No | No |
| 50th-Percentile Queue Length [veh] | 2.58 | 7.37 | 3.29 | 0.89 | 5.98 | 6.39 | 1.53 | 3.62 | 10.61 | 8.96 | 3.37 | 1.77 |
| 50th-Percentile Queue Length [ft] | 64.45 | 184.14 | 82.21 | 22.13 | 149.52 | 159.77 | 38.19 | 90.61 | 265.24 | 224.08 | 84.20 | 44.24 |
| 95th-Percentile Queue Length [veh] | 4.64 | 11.82 | 5.92 | 1.59 | 9.99 | 10.54 | 2.75 | 6.52 | 15.95 | 13.87 | 6.06 | 3.18 |
| 95th-Percentile Queue Length [ft] | 116.01 | 295.42 | 147.97 | 39.84 | 249.79 | 263.42 | 68.74 | 163.10 | 398.78 | 346.83 | 151.56 | 79.62 |

**Movement, Approach, & Intersection Results**

| | | | | | | | | | | | | |
|---|---|---|---|---|---|---|---|---|---|---|---|---|
| d_M, Delay for Movement [s/veh] | 55.57 | 16.00 | 8.75 | 55.28 | 16.87 | 17.72 | 60.02 | 55.28 | 73.16 | 53.17 | 34.62 | 24.41 |
| Movement LOS | E | B | A | E | B | B | E | E | E | D | C | C |
| d_A, Approach Delay [s/veh] | 15.92 | | | 18.53 | | | 64.33 | | | 44.70 | | |
| Approach LOS | B | | | B | | | E | | | D | | |
| d_I, Intersection Delay [s/veh] | 27.93 | | | | | | | | | | | |
| Intersection LOS | C | | | | | | | | | | | |
| Intersection V/C | 0.902 | | | | | | | | | | | |

## Sequence

| | | | | | | | | | | | | | | | | |
|---|---|---|---|---|---|---|---|---|---|---|---|---|---|---|---|---|
| Ring 1 | 1 | 2 | 3 | 4 | - | - | - | - | - | - | - | - | - | - | - | - |
| Ring 2 | 5 | 6 | 7 | 8 | - | - | - | - | - | - | - | - | - | - | - | - |
| Ring 3 | - | - | - | - | - | - | - | - | - | - | - | - | - | - | - | - |
| Ring 4 | - | - | - | - | - | - | - | - | - | - | - | - | - | - | - | - |

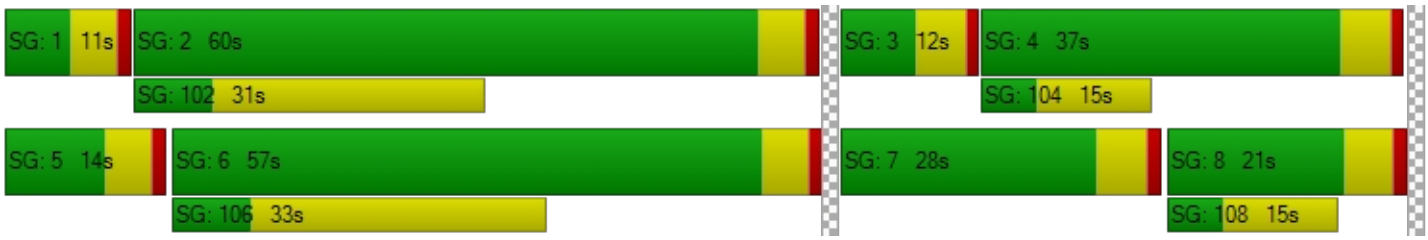

**Intersection Level Of Service Report**
**Intersection 3: Sierra Ave (NS) / I-10 Ramps (EW)**

| | | | |
|---|---|---|---|
| Control Type: | Signalized | Delay (sec / veh): | 25.6 |
| Analysis Method: | HCM 2010 | Level Of Service: | C |
| Analysis Period: | 15 minutes | Volume to Capacity (v/c): | 0.729 |

**Intersection Setup**

| Name | Sierra Avenue | | | Sierra Avenue | | | I-10 Ramps | | | | | |
|---|---|---|---|---|---|---|---|---|---|---|---|---|
| Approach | Northbound | | | Southbound | | | Eastbound | | | Westbound | | |
| Lane Configuration | | | | | | | | | | | | |
| Turning Movement | Left | Thru | Right | Left | Thru | Right | Left | Thru | Right | Left | Thru | Right |
| Lane Width [ft] | 12.00 | 12.00 | 12.00 | 12.00 | 12.00 | 12.00 | 12.00 | 12.00 | 12.00 | 12.00 | 12.00 | 12.00 |
| No. of Lanes in Pocket | 2 | 0 | 0 | 2 | 0 | 0 | 1 | 0 | 0 | 0 | 0 | 1 |
| Pocket Length [ft] | 540.00 | 100.00 | 100.00 | 295.00 | 100.00 | 100.00 | 430.00 | 100.00 | 100.00 | 100.00 | 100.00 | 520.00 |
| Speed [mph] | 40.00 | | | 35.00 | | | 30.00 | | | 30.00 | | |
| Grade [%] | 0.00 | | | 0.00 | | | 0.00 | | | 0.00 | | |
| Crosswalk | No | | | No | | | Yes | | | Yes | | |

**volumes**

| Name | Sierra Avenue | | | Sierra Avenue | | | I-10 Ramps | | | | | |
|---|---|---|---|---|---|---|---|---|---|---|---|---|
| Base Volume Input [veh/h] | 390 | 775 | 509 | 530 | 685 | 870 | 821 | 0 | 326 | 516 | 0 | 557 |
| Base Volume Adjustment Factor | 1.0000 | 1.0000 | 1.0000 | 1.0000 | 1.0000 | 1.0000 | 1.0000 | 1.0000 | 1.0000 | 1.0000 | 1.0000 | 1.0000 |
| Heavy Vehicles Percentage [%] | 2.00 | 2.00 | 2.00 | 2.00 | 2.00 | 2.00 | 2.00 | 2.00 | 2.00 | 2.00 | 2.00 | 2.00 |
| Growth Rate | 1.00 | 1.00 | 1.00 | 1.00 | 1.00 | 1.00 | 1.00 | 1.00 | 1.00 | 1.00 | 1.00 | 1.00 |
| In-Process Volume [veh/h] | 0 | 0 | 0 | 0 | 0 | 0 | 0 | 0 | 0 | 0 | 0 | 0 |
| Site-Generated Trips [veh/h] | 0 | 0 | 0 | 0 | 0 | 0 | 0 | 0 | 0 | 0 | 0 | 0 |
| Diverted Trips [veh/h] | 0 | 0 | 0 | 0 | 0 | 0 | 0 | 0 | 0 | 0 | 0 | 0 |
| Pass-by Trips [veh/h] | 0 | 0 | 0 | 0 | 0 | 0 | 0 | 0 | 0 | 0 | 0 | 0 |
| Existing Site Adjustment Volume [veh/h] | 0 | 0 | 0 | 0 | 0 | 0 | 0 | 0 | 0 | 0 | 0 | 0 |
| Other Volume [veh/h] | 0 | 0 | 0 | 0 | 0 | 0 | 0 | 0 | 0 | 0 | 0 | 0 |
| Right-Turn on Red Volume [veh/h] | 0 | 0 | 0 | 0 | 0 | 0 | 0 | 0 | 0 | 0 | 0 | 0 |
| Total Hourly Volume [veh/h] | 390 | 775 | 509 | 530 | 685 | 870 | 821 | 0 | 326 | 516 | 0 | 557 |
| Peak Hour Factor | 0.9830 | 0.9830 | 0.9830 | 0.9830 | 0.9830 | 0.9830 | 0.9830 | 1.0000 | 0.9830 | 0.9830 | 1.0000 | 0.9830 |
| Other Adjustment Factor | 1.0000 | 1.0000 | 1.0000 | 1.0000 | 1.0000 | 1.0000 | 1.0000 | 1.0000 | 1.0000 | 1.0000 | 1.0000 | 1.0000 |
| Total 15-Minute Volume [veh/h] | 99 | 197 | 129 | 135 | 174 | 221 | 209 | 0 | 83 | 131 | 0 | 142 |
| Total Analysis Volume [veh/h] | 397 | 788 | 518 | 539 | 697 | 885 | 835 | 0 | 332 | 525 | 0 | 567 |
| Presence of On-Street Parking | No | | No | No | | No | No | | No | No | | No |
| On-Street Parking Maneuver Rate [/h] | 0 | 0 | 0 | 0 | 0 | 0 | 0 | 0 | 0 | 0 | 0 | 0 |
| Local Bus Stopping Rate [/h] | 0 | 0 | 0 | 0 | 0 | 0 | 0 | 0 | 0 | 0 | 0 | 0 |
| Pedestrian Volume [ped/h] | 0 | | | 0 | | | 0 | | | 0 | | |
| Bicycle Volume [bicycles/h] | 0 | | | 0 | | | 0 | | | 0 | | |

**Intersection Settings**

| | |
|---|---|
| Located in CBD | No |
| Signal Coordination Group | 1 - NS - Sierra |
| Cycle Length [s] | 120 |
| Coordination Type | Time of Day Pattern Coordinated |
| Actuation Type | Fully actuated |
| Offset [s] | 94.0 |
| Offset Reference | LagFO |
| Permissive Mode | SingleBand |
| Lost time [s] | 12.00 |

**Phasing & Timing**

| Control Type | Permiss | Permiss | Overlap | Permiss | Permiss | Overlap | Permiss | Permiss | Overlap | Permiss | Permiss | Overlap |
|---|---|---|---|---|---|---|---|---|---|---|---|---|
| Signal group | 2 | 2 | 2 | 6 | 6 | 6 | 3 | 0 | 3 | 7 | 0 | 7 |
| Auxiliary Signal Groups | | | 2,3,6,7 | | | 2,3,6,7 | | | 2,3,6 | | | 2,6,7 |
| Lead / Lag | Lag | - | - | Lag | - | - | Lead | - | - | Lead | - | - |
| Minimum Green [s] | 5 | 5 | 5 | 5 | 5 | 5 | 5 | 0 | 5 | 5 | 0 | 5 |
| Maximum Green [s] | 30 | 30 | 30 | 30 | 30 | 30 | 30 | 0 | 30 | 30 | 0 | 30 |
| Amber [s] | 4.4 | 4.4 | 4.4 | 4.1 | 4.1 | 4.1 | 3.7 | 0.0 | 3.7 | 3.7 | 0.0 | 3.7 |
| All red [s] | 3.0 | 3.0 | 3.0 | 3.0 | 3.0 | 3.0 | 3.0 | 0.0 | 3.0 | 3.0 | 0.0 | 3.0 |
| Split [s] | 30 | 30 | 30 | 42 | 42 | 42 | 48 | 0 | 48 | 48 | 0 | 48 |
| Vehicle Extension [s] | 3.0 | 3.0 | 3.0 | 3.0 | 3.0 | 3.0 | 3.0 | 0.0 | 3.0 | 3.0 | 0.0 | 3.0 |
| Walk [s] | 7 | 7 | 7 | 7 | 7 | 7 | 7 | 0 | 7 | 7 | 0 | 7 |
| Pedestrian Clearance [s] | 15 | 15 | 15 | 15 | 15 | 15 | 15 | 0 | 15 | 15 | 0 | 15 |
| I1, Start-Up Lost Time [s] | 2.0 | 2.0 | 2.0 | 2.0 | 2.0 | 2.0 | 2.0 | 0.0 | 2.0 | 2.0 | 0.0 | 2.0 |
| I2, Clearance Lost Time [s] | 5.4 | 5.4 | 5.4 | 5.1 | 5.1 | 5.1 | 4.7 | 0.0 | 4.7 | 4.7 | 0.0 | 4.7 |
| Minimum Recall | | No | No | | No | No | No | | No | No | | No |
| Maximum Recall | | No | No | | No | No | No | | No | No | | No |
| Pedestrian Recall | | No | No | | No | No | No | | No | No | | No |
| Detector Location [ft] | 0.0 | 0.0 | 0.0 | 0.0 | 0.0 | 0.0 | 0.0 | 0.0 | 0.0 | 0.0 | 0.0 | 0.0 |
| Detector Length [ft] | 0.0 | 0.0 | 0.0 | 0.0 | 0.0 | 0.0 | 0.0 | 0.0 | 0.0 | 0.0 | 0.0 | 0.0 |
| I, Upstream Filtering Factor | 1.00 | 1.00 | 1.00 | 1.00 | 1.00 | 1.00 | 1.00 | 1.00 | 1.00 | 1.00 | 1.00 | 1.00 |

**Exclusive Pedestrian Phase**

| | |
|---|---|
| Pedestrian Signal Group | 0 |
| Pedestrian Walk [s] | 0 |
| Pedestrian Clearance [s] | 0 |

**Lane Group Calculations**

| Lane Group | L | C | R | L | C | R | L | R | L | R |
|---|---|---|---|---|---|---|---|---|---|---|
| L, Total Lost Time per Cycle [s] | 7.40 | 7.40 | 7.10 | 7.10 | 7.10 | 7.10 | 6.70 | 7.10 | 6.70 | 7.10 |
| l1_p, Permitted Start-Up Lost Time [s] | 2.00 | 0.00 | 0.00 | 2.00 | 0.00 | 0.00 | 2.00 | 0.00 | 2.00 | 0.00 |
| l2, Clearance Lost Time [s] | 5.40 | 5.40 | 0.00 | 5.10 | 5.10 | 0.00 | 4.70 | 5.40 | 4.70 | 0.00 |
| g_i, Effective Green Time [s] | 29 | 29 | 146 | 29 | 29 | 146 | 41 | 142 | 41 | 105 |
| g / C, Green / Cycle | 0.24 | 0.24 | 1.22 | 0.24 | 0.24 | 1.22 | 0.34 | 1.18 | 0.34 | 0.88 |
| (v / s)_i Volume / Saturation Flow Rate | 0.14 | 0.16 | 0.33 | 0.20 | 0.14 | 0.56 | 0.30 | 0.21 | 0.19 | 0.36 |
| s, saturation flow rate [veh/h] | 2741 | 5074 | 1583 | 2741 | 5074 | 1583 | 2741 | 1583 | 2741 | 1583 |
| c, Capacity [veh/h] | 671 | 1216 | 1933 | 681 | 1228 | 1933 | 941 | 1869 | 941 | 1392 |
| d1, Uniform Delay [s] | 37.73 | 36.45 | 0.00 | 39.83 | 35.39 | 0.00 | 39.71 | 0.00 | 34.16 | 0.68 |
| k, delay calibration | 0.50 | 0.50 | 0.50 | 0.50 | 0.50 | 0.50 | 0.11 | 0.50 | 0.11 | 0.50 |
| I, Upstream Filtering Factor | 1.00 | 1.00 | 1.00 | 1.00 | 1.00 | 1.00 | 1.00 | 1.00 | 1.00 | 1.00 |
| d2, Incremental Delay [s] | 3.82 | 2.68 | 0.34 | 9.15 | 1.91 | 0.78 | 3.08 | 0.21 | 0.52 | 0.89 |
| d3, Initial Queue Delay [s] | 0.00 | 0.00 | 0.00 | 0.00 | 0.00 | 0.00 | 0.00 | 0.00 | 0.00 | 0.00 |
| Rp, platoon ratio | 1.33 | 1.33 | 1.01 | 1.33 | 1.33 | 1.01 | 1.00 | 1.00 | 1.00 | 1.00 |
| PF, progression factor | 1.00 | 1.00 | 1.00 | 1.00 | 1.00 | 1.00 | 1.00 | 1.00 | 1.00 | 1.00 |

**Lane Group Results**

| | | | | | | | | | | |
|---|---|---|---|---|---|---|---|---|---|---|
| X, volume / capacity | 0.59 | 0.65 | 0.27 | 0.79 | 0.57 | 0.46 | 0.89 | 0.18 | 0.56 | 0.41 |
| d, Delay for Lane Group [s/veh] | 41.55 | 39.14 | 0.34 | 48.98 | 37.30 | 0.78 | 42.79 | 0.21 | 34.68 | 1.57 |
| Lane Group LOS | D | D | A | D | D | A | D | A | C | A |
| Critical Lane Group | No | Yes | No | Yes | No | No | Yes | No | No | No |
| 50th-Percentile Queue Length [veh] | 5.02 | 6.34 | 0.18 | 7.84 | 5.46 | 0.42 | 12.24 | 0.11 | 6.47 | 0.34 |
| 50th-Percentile Queue Length [ft] | 125.57 | 158.49 | 4.57 | 196.11 | 136.42 | 10.53 | 306.09 | 2.70 | 161.79 | 8.56 |
| 95th-Percentile Queue Length [veh] | 8.70 | 10.47 | 0.33 | 12.44 | 9.29 | 0.76 | 17.98 | 0.19 | 10.64 | 0.62 |
| 95th-Percentile Queue Length [ft] | 217.46 | 261.72 | 8.23 | 310.94 | 232.20 | 18.95 | 449.55 | 4.86 | 266.09 | 15.42 |

**Movement, Approach, & Intersection Results**

| | | | | | | | | | | | | |
|---|---|---|---|---|---|---|---|---|---|---|---|---|
| d_M, Delay for Movement [s/veh] | 41.55 | 39.14 | 0.34 | 48.98 | 37.30 | 0.78 | 42.79 | 0.00 | 0.21 | 34.68 | 0.00 | 1.57 |
| Movement LOS | D | D | A | D | D | A | D | | A | C | | A |
| d_A, Approach Delay [s/veh] | 27.90 | | | 25.03 | | | 30.68 | | | 17.49 | | |
| Approach LOS | C | | | C | | | C | | | B | | |
| d_I, Intersection Delay [s/veh] | 25.56 | | | | | | | | | | | |
| Intersection LOS | C | | | | | | | | | | | |
| Intersection V/C | 0.729 | | | | | | | | | | | |

## Sequence

| | | | | | | | | | | | | | | | | |
|---|---|---|---|---|---|---|---|---|---|---|---|---|---|---|---|---|
| Ring 1 | 2 | 6 | 3 | - | - | - | - | - | - | - | - | - | - | - | - | - |
| Ring 2 | - | - | 7 | - | - | - | - | - | - | - | - | - | - | - | - | - |
| Ring 3 | - | - | - | - | - | - | - | - | - | - | - | - | - | - | - | - |
| Ring 4 | - | - | - | - | - | - | - | - | - | - | - | - | - | - | - | - |

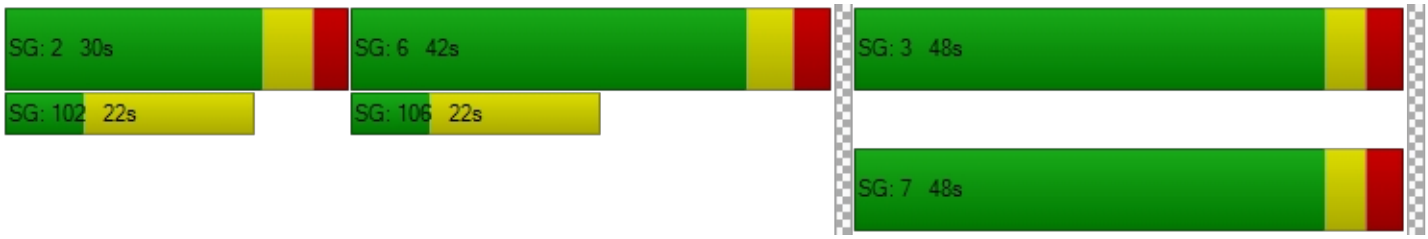

**Intersection Level Of Service Report**
**Intersection 4: Sierra Ave (NS) / Slover Ave (EW)**

| | | | |
|---|---|---|---|
| Control Type: | Signalized | Delay (sec / veh): | 28.2 |
| Analysis Method: | HCM 2010 | Level Of Service: | C |
| Analysis Period: | 15 minutes | Volume to Capacity (v/c): | 0.644 |

**Intersection Setup**

| Name | Sierra Avenue | | | Sierra Avenue | | | Slover Avenue | | | Slover Avenue | | |
|---|---|---|---|---|---|---|---|---|---|---|---|---|
| Approach | Northbound | | | Southbound | | | Eastbound | | | Westbound | | |
| Lane Configuration | | | | | | | | | | | | |
| Turning Movement | Left | Thru | Right | Left | Thru | Right | Left | Thru | Right | Left | Thru | Right |
| Lane Width [ft] | 12.00 | 12.00 | 12.00 | 12.00 | 12.00 | 12.00 | 12.00 | 12.00 | 12.00 | 12.00 | 12.00 | 12.00 |
| No. of Lanes in Pocket | 2 | 0 | 0 | 2 | 0 | 0 | 2 | 0 | 1 | 2 | 0 | 1 |
| Pocket Length [ft] | 195.00 | 100.00 | 100.00 | 615.00 | 100.00 | 100.00 | 290.00 | 100.00 | 290.00 | 230.00 | 100.00 | 300.00 |
| Speed [mph] | 50.00 | | | 40.00 | | | 45.00 | | | 45.00 | | |
| Grade [%] | 0.00 | | | 0.00 | | | 0.00 | | | 0.00 | | |
| Crosswalk | Yes | | | Yes | | | Yes | | | Yes | | |

**volumes**

| Name | Sierra Avenue | | | Sierra Avenue | | | Slover Avenue | | | Slover Avenue | | |
|---|---|---|---|---|---|---|---|---|---|---|---|---|
| Base Volume Input [veh/h] | 93 | 1079 | 112 | 486 | 716 | 229 | 276 | 173 | 49 | 64 | 174 | 349 |
| Base Volume Adjustment Factor | 1.0000 | 1.0000 | 1.0000 | 1.0000 | 1.0000 | 1.0000 | 1.0000 | 1.0000 | 1.0000 | 1.0000 | 1.0000 | 1.0000 |
| Heavy Vehicles Percentage [%] | 2.00 | 2.00 | 2.00 | 2.00 | 2.00 | 2.00 | 2.00 | 2.00 | 2.00 | 2.00 | 2.00 | 2.00 |
| Growth Rate | 1.00 | 1.00 | 1.00 | 1.00 | 1.00 | 1.00 | 1.00 | 1.00 | 1.00 | 1.00 | 1.00 | 1.00 |
| In-Process Volume [veh/h] | 0 | 0 | 0 | 0 | 0 | 0 | 0 | 0 | 0 | 0 | 0 | 0 |
| Site-Generated Trips [veh/h] | 0 | 0 | 0 | 0 | 0 | 0 | 0 | 0 | 0 | 0 | 0 | 0 |
| Diverted Trips [veh/h] | 0 | 0 | 0 | 0 | 0 | 0 | 0 | 0 | 0 | 0 | 0 | 0 |
| Pass-by Trips [veh/h] | 0 | 0 | 0 | 0 | 0 | 0 | 0 | 0 | 0 | 0 | 0 | 0 |
| Existing Site Adjustment Volume [veh/h] | 0 | 0 | 0 | 0 | 0 | 0 | 0 | 0 | 0 | 0 | 0 | 0 |
| Other Volume [veh/h] | 0 | 0 | 0 | 0 | 0 | 0 | 0 | 0 | 0 | 0 | 0 | 0 |
| Right-Turn on Red Volume [veh/h] | 0 | 0 | 0 | 0 | 0 | 0 | 0 | 0 | 0 | 0 | 0 | 0 |
| Total Hourly Volume [veh/h] | 93 | 1079 | 112 | 486 | 716 | 229 | 276 | 173 | 49 | 64 | 174 | 349 |
| Peak Hour Factor | 0.9580 | 0.9580 | 0.9580 | 0.9580 | 0.9580 | 0.9580 | 0.9580 | 0.9580 | 0.9580 | 0.9580 | 0.9580 | 0.9580 |
| Other Adjustment Factor | 1.0000 | 1.0000 | 1.0000 | 1.0000 | 1.0000 | 1.0000 | 1.0000 | 1.0000 | 1.0000 | 1.0000 | 1.0000 | 1.0000 |
| Total 15-Minute Volume [veh/h] | 24 | 282 | 29 | 127 | 187 | 60 | 72 | 45 | 13 | 17 | 45 | 91 |
| Total Analysis Volume [veh/h] | 97 | 1126 | 117 | 507 | 747 | 239 | 288 | 181 | 51 | 67 | 182 | 364 |
| Presence of On-Street Parking | No | | No | No | | No | No | | No | No | | No |
| On-Street Parking Maneuver Rate [/h] | 0 | 0 | 0 | 0 | 0 | 0 | 0 | 0 | 0 | 0 | 0 | 0 |
| Local Bus Stopping Rate [/h] | 0 | 0 | 0 | 0 | 0 | 0 | 0 | 0 | 0 | 0 | 0 | 0 |
| Pedestrian Volume [ped/h] | 0 | | | 0 | | | 0 | | | 0 | | |
| Bicycle Volume [bicycles/h] | 0 | | | 0 | | | 0 | | | 0 | | |

**Intersection Settings**

| | |
|---|---|
| Located in CBD | No |
| Signal Coordination Group | 1 - NS - Sierra |
| Cycle Length [s] | 120 |
| Coordination Type | Time of Day Pattern Coordinated |
| Actuation Type | Fully actuated |
| Offset [s] | 26.0 |
| Offset Reference | LagFO |
| Permissive Mode | SingleBand |
| Lost time [s] | 16.00 |

**Phasing & Timing**

| Control Type | Protecte | Permiss | Permiss | Protecte | Permiss | Permiss | Protecte | Permiss | Permiss | Protecte | Permiss | Overlap |
|---|---|---|---|---|---|---|---|---|---|---|---|---|
| Signal group | 5 | 2 | 0 | 1 | 6 | 0 | 3 | 8 | 0 | 7 | 4 | 4 |
| Auxiliary Signal Groups | | | | | | | | | | | | 1,4 |
| Lead / Lag | Lead | - | - | Lead | - | - | Lead | - | - | Lead | - | - |
| Minimum Green [s] | 5 | 5 | 0 | 5 | 5 | 0 | 5 | 5 | 0 | 5 | 5 | 5 |
| Maximum Green [s] | 30 | 30 | 0 | 30 | 30 | 0 | 30 | 30 | 0 | 30 | 30 | 30 |
| Amber [s] | 5.2 | 5.2 | 0.0 | 4.4 | 4.4 | 0.0 | 4.8 | 4.8 | 0.0 | 4.8 | 4.8 | 4.8 |
| All red [s] | 1.0 | 1.0 | 0.0 | 1.0 | 1.0 | 0.0 | 1.0 | 1.0 | 0.0 | 1.0 | 1.0 | 1.0 |
| Split [s] | 12 | 50 | 0 | 30 | 68 | 0 | 19 | 28 | 0 | 12 | 21 | 21 |
| Vehicle Extension [s] | 3.0 | 3.0 | 0.0 | 3.0 | 3.0 | 0.0 | 3.0 | 3.0 | 0.0 | 3.0 | 3.0 | 3.0 |
| Walk [s] | 0 | 7 | 0 | 0 | 7 | 0 | 0 | 5 | 0 | 0 | 5 | 5 |
| Pedestrian Clearance [s] | 0 | 22 | 0 | 0 | 20 | 0 | 0 | 10 | 0 | 0 | 10 | 10 |
| I1, Start-Up Lost Time [s] | 2.0 | 2.0 | 0.0 | 2.0 | 2.0 | 0.0 | 2.0 | 2.0 | 0.0 | 2.0 | 2.0 | 2.0 |
| I2, Clearance Lost Time [s] | 4.2 | 4.2 | 0.0 | 3.4 | 3.4 | 0.0 | 3.8 | 3.8 | 0.0 | 3.8 | 3.8 | 3.8 |
| Minimum Recall | No | No | | No | No | | No | No | | No | No | No |
| Maximum Recall | No | No | | No | No | | No | No | | No | No | No |
| Pedestrian Recall | No | No | | No | No | | No | No | | No | No | No |
| Detector Location [ft] | 0.0 | 0.0 | 0.0 | 0.0 | 0.0 | 0.0 | 0.0 | 0.0 | 0.0 | 0.0 | 0.0 | 0.0 |
| Detector Length [ft] | 0.0 | 0.0 | 0.0 | 0.0 | 0.0 | 0.0 | 0.0 | 0.0 | 0.0 | 0.0 | 0.0 | 0.0 |
| I, Upstream Filtering Factor | 1.00 | 1.00 | 1.00 | 1.00 | 1.00 | 1.00 | 1.00 | 1.00 | 1.00 | 1.00 | 1.00 | 1.00 |

**Exclusive Pedestrian Phase**

| | |
|---|---|
| Pedestrian Signal Group | 0 |
| Pedestrian Walk [s] | 0 |
| Pedestrian Clearance [s] | 0 |

**Lane Group Calculations**

| Lane Group | L | C | R | L | C | C | L | C | R | L | C | R |
|---|---|---|---|---|---|---|---|---|---|---|---|---|
| L, Total Lost Time per Cycle [s] | 6.20 | 6.20 | 6.20 | 5.40 | 5.40 | 5.40 | 5.80 | 5.80 | 5.80 | 5.80 | 5.80 | 5.40 |
| l1_p, Permitted Start-Up Lost Time [s] | 0.00 | 0.00 | 0.00 | 0.00 | 0.00 | 0.00 | 0.00 | 0.00 | 0.00 | 0.00 | 0.00 | 0.00 |
| l2, Clearance Lost Time [s] | 4.20 | 4.20 | 4.20 | 3.40 | 3.40 | 3.40 | 3.80 | 3.80 | 3.80 | 3.80 | 3.80 | 0.00 |
| g_i, Effective Green Time [s] | 5 | 55 | 55 | 20 | 71 | 71 | 12 | 16 | 16 | 5 | 9 | 35 |
| g / C, Green / Cycle | 0.04 | 0.46 | 0.46 | 0.17 | 0.59 | 0.59 | 0.10 | 0.14 | 0.14 | 0.04 | 0.07 | 0.29 |
| (v / s)_i Volume / Saturation Flow Rate | 0.03 | 0.22 | 0.07 | 0.15 | 0.19 | 0.19 | 0.08 | 0.05 | 0.03 | 0.02 | 0.05 | 0.13 |
| s, saturation flow rate [veh/h] | 3445 | 5074 | 1583 | 3445 | 3547 | 1641 | 3445 | 3547 | 1583 | 3445 | 3547 | 2803 |
| c, Capacity [veh/h] | 149 | 2338 | 730 | 588 | 2086 | 965 | 346 | 487 | 217 | 131 | 265 | 824 |
| d1, Uniform Delay [s] | 55.68 | 15.29 | 13.21 | 45.01 | 6.04 | 6.04 | 53.03 | 47.11 | 46.19 | 56.66 | 54.17 | 34.41 |
| k, delay calibration | 0.11 | 0.50 | 0.50 | 0.11 | 0.50 | 0.50 | 0.11 | 0.11 | 0.11 | 0.11 | 0.11 | 0.11 |
| I, Upstream Filtering Factor | 1.00 | 1.00 | 1.00 | 1.00 | 1.00 | 1.00 | 1.00 | 1.00 | 1.00 | 1.00 | 1.00 | 1.00 |
| d2, Incremental Delay [s] | 4.69 | 0.71 | 0.47 | 3.88 | 0.41 | 0.89 | 5.24 | 0.47 | 0.55 | 3.06 | 3.12 | 0.37 |
| d3, Initial Queue Delay [s] | 0.00 | 0.00 | 0.00 | 0.00 | 0.00 | 0.00 | 0.00 | 0.00 | 0.00 | 0.00 | 0.00 | 0.00 |
| Rp, platoon ratio | 1.33 | 1.33 | 1.33 | 1.33 | 1.33 | 1.33 | 1.00 | 1.00 | 1.00 | 1.00 | 1.00 | 1.00 |
| PF, progression factor | 1.00 | 1.00 | 1.00 | 1.00 | 1.00 | 1.00 | 1.00 | 1.00 | 1.00 | 1.00 | 1.00 | 1.00 |

**Lane Group Results**

| | | | | | | | | | | | | |
|---|---|---|---|---|---|---|---|---|---|---|---|---|
| X, volume / capacity | 0.65 | 0.48 | 0.16 | 0.86 | 0.32 | 0.32 | 0.83 | 0.37 | 0.23 | 0.51 | 0.69 | 0.44 |
| d, Delay for Lane Group [s/veh] | 60.38 | 16.01 | 13.68 | 48.90 | 6.45 | 6.93 | 58.27 | 47.58 | 46.74 | 59.72 | 57.30 | 34.78 |
| Lane Group LOS | E | B | B | D | A | A | E | D | D | E | E | C |
| Critical Lane Group | No | Yes | No | Yes | No | No | Yes | No | No | No | No | Yes |
| 50th-Percentile Queue Length [veh] | 1.48 | 4.67 | 1.35 | 7.04 | 2.15 | 2.11 | 4.41 | 2.44 | 1.36 | 1.03 | 2.73 | 4.22 |
| 50th-Percentile Queue Length [ft] | 36.98 | 116.77 | 33.65 | 175.97 | 53.66 | 52.85 | 110.17 | 60.89 | 34.03 | 25.76 | 68.32 | 105.59 |
| 95th-Percentile Queue Length [veh] | 2.66 | 8.22 | 2.42 | 11.39 | 3.86 | 3.81 | 7.85 | 4.38 | 2.45 | 1.85 | 4.92 | 7.59 |
| 95th-Percentile Queue Length [ft] | 66.56 | 205.38 | 60.57 | 284.74 | 96.59 | 95.13 | 196.24 | 109.61 | 61.26 | 46.36 | 122.97 | 189.86 |

**Movement, Approach, & Intersection Results**

| | | | | | | | | | | | | |
|---|---|---|---|---|---|---|---|---|---|---|---|---|
| d_M, Delay for Movement [s/veh] | 60.38 | 16.01 | 13.68 | 48.90 | 6.50 | 6.93 | 58.27 | 47.58 | 46.74 | 59.72 | 57.30 | 34.78 |
| Movement LOS | E | B | B | D | A | A | E | D | D | E | E | C |
| d_A, Approach Delay [s/veh] | 19.02 | | | 20.97 | | | 53.42 | | | 44.19 | | |
| Approach LOS | B | | | C | | | D | | | D | | |
| d_I, Intersection Delay [s/veh] | 28.15 | | | | | | | | | | | |
| Intersection LOS | C | | | | | | | | | | | |
| Intersection V/C | 0.644 | | | | | | | | | | | |

## Sequence

| | | | | | | | | | | | | | | | | |
|---|---|---|---|---|---|---|---|---|---|---|---|---|---|---|---|---|
| Ring 1 | 1 | 2 | 3 | 4 | - | - | - | - | - | - | - | - | - | - | - | - |
| Ring 2 | 5 | 6 | 7 | 8 | - | - | - | - | - | - | - | - | - | - | - | - |
| Ring 3 | - | - | - | - | - | - | - | - | - | - | - | - | - | - | - | - |
| Ring 4 | - | - | - | - | - | - | - | - | - | - | - | - | - | - | - | - |

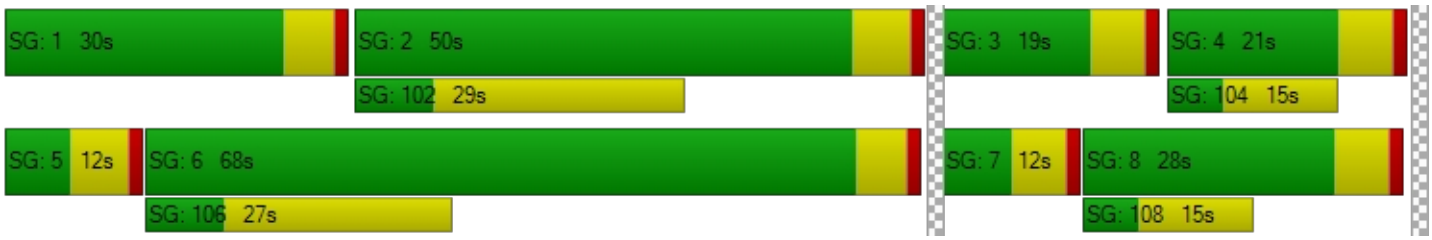

**Intersection Level Of Service Report**
**Intersection 5: Palmetto Ave (NS) / Valley Blvd (EW)**

| | | | |
|---|---|---|---|
| Control Type: | Signalized | Delay (sec / veh): | 22.0 |
| Analysis Method: | HCM 2010 | Level Of Service: | C |
| Analysis Period: | 15 minutes | Volume to Capacity (v/c): | 0.443 |

**Intersection Setup**

| Name | Palmetto Avenue | | Valley Boulevard | | Valley Boulevard | |
|---|---|---|---|---|---|---|
| Approach | Southbound | | Eastbound | | Westbound | |
| Lane Configuration | | | | | | |
| Turning Movement | Left | Right | Left | Thru | Thru | Right |
| Lane Width [ft] | 12.00 | 12.00 | 12.00 | 12.00 | 12.00 | 12.00 |
| No. of Lanes in Pocket | 0 | 0 | 1 | 0 | 0 | 0 |
| Pocket Length [ft] | 100.00 | 100.00 | 150.00 | 100.00 | 100.00 | 100.00 |
| Speed [mph] | 35.00 | | 40.00 | | 40.00 | |
| Grade [%] | 0.00 | | 0.00 | | 0.00 | |
| Crosswalk | Yes | | Yes | | No | |

**volumes**

| Name | Palmetto Avenue | | Valley Boulevard | | Valley Boulevard | |
|---|---|---|---|---|---|---|
| Base Volume Input [veh/h] | 31 | 262 | 137 | 358 | 528 | 33 |
| Base Volume Adjustment Factor | 1.0000 | 1.0000 | 1.0000 | 1.0000 | 1.0000 | 1.0000 |
| Heavy Vehicles Percentage [%] | 2.00 | 2.00 | 4.00 | 4.00 | 4.00 | 4.00 |
| Growth Rate | 1.00 | 1.00 | 1.00 | 1.00 | 1.00 | 1.00 |
| In-Process Volume [veh/h] | 0 | 0 | 0 | 0 | 0 | 0 |
| Site-Generated Trips [veh/h] | 0 | 0 | 0 | 0 | 0 | 0 |
| Diverted Trips [veh/h] | 0 | 0 | 0 | 0 | 0 | 0 |
| Pass-by Trips [veh/h] | 0 | 0 | 0 | 0 | 0 | 0 |
| Existing Site Adjustment Volume [veh/h] | 0 | 0 | 0 | 0 | 0 | 0 |
| Other Volume [veh/h] | 0 | 0 | 0 | 0 | 0 | 0 |
| Right-Turn on Red Volume [veh/h] | 0 | 0 | 0 | 0 | 0 | 0 |
| Total Hourly Volume [veh/h] | 31 | 262 | 137 | 358 | 528 | 33 |
| Peak Hour Factor | 0.9270 | 0.9270 | 0.9270 | 0.9270 | 0.9270 | 0.9270 |
| Other Adjustment Factor | 1.0000 | 1.0000 | 1.0000 | 1.0000 | 1.0000 | 1.0000 |
| Total 15-Minute Volume [veh/h] | 8 | 71 | 37 | 97 | 142 | 9 |
| Total Analysis Volume [veh/h] | 33 | 283 | 148 | 386 | 570 | 36 |
| Presence of On-Street Parking | No | No | No | No | No | No |
| On-Street Parking Maneuver Rate [/h] | 0 | 0 | 0 | 0 | 0 | 0 |
| Local Bus Stopping Rate [/h] | 0 | 0 | 0 | 0 | 0 | 0 |
| Pedestrian Volume [ped/h] | 0 | | 0 | | 0 | |
| Bicycle Volume [bicycles/h] | 0 | | 0 | | 0 | |

**Intersection Settings**

| | |
|---|---|
| Located in CBD | No |
| Signal Coordination Group | 3 - EW - Valley |
| Cycle Length [s] | 120 |
| Coordination Type | Time of Day Pattern Coordinated |
| Actuation Type | Fully actuated |
| Offset [s] | 0.0 |
| Offset Reference | LagFO |
| Permissive Mode | SingleBand |
| Lost time [s] | 12.00 |

**Phasing & Timing**

| Control Type | Split | Split | Protected | Permissive | Permissive | Permissive |
|---|---|---|---|---|---|---|
| Signal group | 1 | 0 | 3 | 8 | 4 | 0 |
| Auxiliary Signal Groups | | | | | | |
| Lead / Lag | Lead | - | Lead | - | - | - |
| Minimum Green [s] | 5 | 0 | 5 | 5 | 5 | 0 |
| Maximum Green [s] | 30 | 0 | 30 | 30 | 30 | 0 |
| Amber [s] | 4.1 | 0.0 | 4.4 | 4.4 | 4.4 | 0.0 |
| All red [s] | 1.0 | 0.0 | 1.0 | 1.0 | 1.0 | 0.0 |
| Split [s] | 53 | 0 | 26 | 67 | 41 | 0 |
| Vehicle Extension [s] | 3.0 | 0.0 | 3.0 | 3.0 | 3.0 | 0.0 |
| Walk [s] | 7 | 0 | 0 | 7 | 7 | 0 |
| Pedestrian Clearance [s] | 26 | 0 | 0 | 17 | 17 | 0 |
| I1, Start-Up Lost Time [s] | 2.0 | 0.0 | 2.0 | 2.0 | 2.0 | 0.0 |
| I2, Clearance Lost Time [s] | 3.1 | 0.0 | 3.4 | 3.4 | 3.4 | 0.0 |
| Minimum Recall | No | | No | No | No | |
| Maximum Recall | No | | No | No | No | |
| Pedestrian Recall | No | | No | No | No | |
| Detector Location [ft] | 0.0 | 0.0 | 0.0 | 0.0 | 0.0 | 0.0 |
| Detector Length [ft] | 0.0 | 0.0 | 0.0 | 0.0 | 0.0 | 0.0 |
| I, Upstream Filtering Factor | 1.00 | 1.00 | 1.00 | 1.00 | 1.00 | 1.00 |

**Exclusive Pedestrian Phase**

| | |
|---|---|
| Pedestrian Signal Group | 0 |
| Pedestrian Walk [s] | 0 |
| Pedestrian Clearance [s] | 0 |

**Lane Group Calculations**

| Lane Group | C | L | C | C | C |
|---|---|---|---|---|---|
| L, Total Lost Time per Cycle [s] | 5.10 | 5.40 | 5.40 | 5.40 | 5.40 |
| l1_p, Permitted Start-Up Lost Time [s] | 0.00 | 0.00 | 0.00 | 0.00 | 0.00 |
| l2, Clearance Lost Time [s] | 3.10 | 3.40 | 3.40 | 3.40 | 3.40 |
| g_i, Effective Green Time [s] | 26 | 12 | 84 | 66 | 66 |
| g / C, Green / Cycle | 0.22 | 0.10 | 0.70 | 0.55 | 0.55 |
| (v / s)_i Volume / Saturation Flow Rate | 0.20 | 0.09 | 0.11 | 0.12 | 0.11 |
| s, saturation flow rate [veh/h] | 1601 | 1740 | 3478 | 3478 | 1771 |
| c, Capacity [veh/h] | 346 | 177 | 2423 | 1913 | 974 |
| d1, Uniform Delay [s] | 45.93 | 50.89 | 1.34 | 7.79 | 7.77 |
| k, delay calibration | 0.11 | 0.11 | 0.50 | 0.50 | 0.50 |
| I, Upstream Filtering Factor | 1.00 | 1.00 | 1.00 | 1.00 | 1.00 |
| d2, Incremental Delay [s] | 9.55 | 10.00 | 0.14 | 0.25 | 0.48 |
| d3, Initial Queue Delay [s] | 0.00 | 0.00 | 0.00 | 0.00 | 0.00 |
| Rp, platoon ratio | 1.00 | 1.33 | 1.33 | 1.33 | 1.33 |
| PF, progression factor | 1.00 | 1.00 | 1.00 | 1.00 | 1.00 |

**Lane Group Results**

| | | | | | |
|---|---|---|---|---|---|
| X, volume / capacity | 0.91 | 0.84 | 0.16 | 0.21 | 0.21 |
| d, Delay for Lane Group [s/veh] | 55.48 | 60.88 | 1.48 | 8.04 | 8.26 |
| Lane Group LOS | E | E | A | A | A |
| Critical Lane Group | Yes | Yes | No | Yes | No |
| 50th-Percentile Queue Length [veh] | 9.98 | 4.62 | 0.36 | 1.57 | 1.63 |
| 50th-Percentile Queue Length [ft] | 249.44 | 115.44 | 9.10 | 39.17 | 40.72 |
| 95th-Percentile Queue Length [veh] | 15.16 | 8.14 | 0.66 | 2.82 | 2.93 |
| 95th-Percentile Queue Length [ft] | 378.95 | 203.55 | 16.38 | 70.51 | 73.29 |

**Movement, Approach, & Intersection Results**

| | | | | | | |
|---|---|---|---|---|---|---|
| d_M, Delay for Movement [s/veh] | 55.48 | 55.48 | 60.88 | 1.48 | 8.10 | 8.26 |
| Movement LOS | E | E | E | A | A | A |
| d_A, Approach Delay [s/veh] | 55.48 | | 17.94 | | 8.11 | |
| Approach LOS | E | | B | | A | |
| d_I, Intersection Delay [s/veh] | 22.00 | | | | | |
| Intersection LOS | C | | | | | |
| Intersection V/C | 0.443 | | | | | |

## Sequence

| | | | | | | | | | | | | | | | | |
|---|---|---|---|---|---|---|---|---|---|---|---|---|---|---|---|---|
| Ring 1 | 1 | 3 | 4 | - | - | - | - | - | - | - | - | - | - | - | - | - |
| Ring 2 | - | - | 8 | - | - | - | - | - | - | - | - | - | - | - | - | - |
| Ring 3 | - | - | - | - | - | - | - | - | - | - | - | - | - | - | - | - |
| Ring 4 | - | - | - | - | - | - | - | - | - | - | - | - | - | - | - | - |

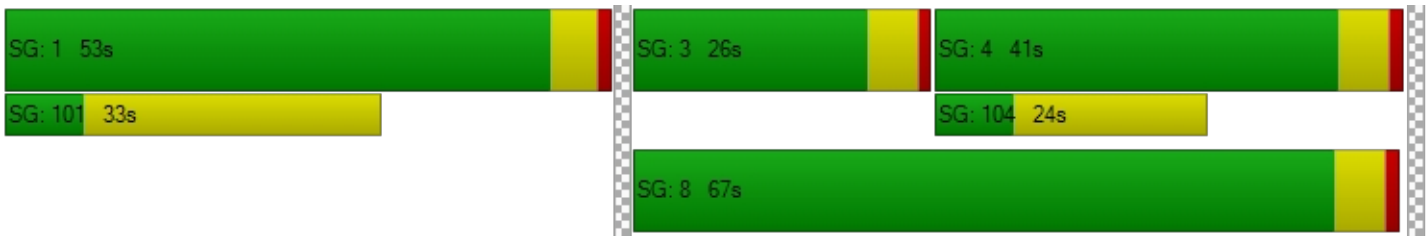

**Intersection Level Of Service Report**
**Intersection 6: Alder Ave (NS) / San Bernardino Ave (EW)**

| | | | |
|---|---|---|---|
| Control Type: | Signalized | Delay (sec / veh): | 15.5 |
| Analysis Method: | HCM 2010 | Level Of Service: | B |
| Analysis Period: | 15 minutes | Volume to Capacity (v/c): | 0.446 |

**Intersection Setup**

| Name | Alder Avenue | | | Alder Avenue | | | San Bernardino Avenue | | | San Bernardino Avenue | | |
|---|---|---|---|---|---|---|---|---|---|---|---|---|
| Approach | Northbound | | | Southbound | | | Eastbound | | | Westbound | | |
| Lane Configuration | | | | | | | | | | | | |
| Turning Movement | Left | Thru | Right | Left | Thru | Right | Left | Thru | Right | Left | Thru | Right |
| Lane Width [ft] | 12.00 | 12.00 | 12.00 | 12.00 | 12.00 | 12.00 | 12.00 | 12.00 | 12.00 | 12.00 | 12.00 | 12.00 |
| No. of Lanes in Pocket | 1 | 0 | 0 | 1 | 0 | 0 | 1 | 0 | 0 | 1 | 0 | 0 |
| Pocket Length [ft] | 100.00 | 100.00 | 100.00 | 100.00 | 100.00 | 100.00 | 100.00 | 100.00 | 100.00 | 80.00 | 100.00 | 100.00 |
| Speed [mph] | 40.00 | | | 40.00 | | | 35.00 | | | 35.00 | | |
| Grade [%] | 0.00 | | | 0.00 | | | 0.00 | | | 0.00 | | |
| Crosswalk | Yes | | | Yes | | | Yes | | | Yes | | |

**volumes**

| Name | Alder Avenue | | | Alder Avenue | | | San Bernardino Avenue | | | San Bernardino Avenue | | |
|---|---|---|---|---|---|---|---|---|---|---|---|---|
| Base Volume Input [veh/h] | 7 | 153 | 28 | 19 | 398 | 66 | 31 | 93 | 44 | 76 | 153 | 20 |
| Base Volume Adjustment Factor | 1.0000 | 1.0000 | 1.0000 | 1.0000 | 1.0000 | 1.0000 | 1.0000 | 1.0000 | 1.0000 | 1.0000 | 1.0000 | 1.0000 |
| Heavy Vehicles Percentage [%] | 2.00 | 2.00 | 2.00 | 2.00 | 2.00 | 2.00 | 2.00 | 2.00 | 2.00 | 2.00 | 2.00 | 2.00 |
| Growth Rate | 1.00 | 1.00 | 1.00 | 1.00 | 1.00 | 1.00 | 1.00 | 1.00 | 1.00 | 1.00 | 1.00 | 1.00 |
| In-Process Volume [veh/h] | 0 | 0 | 0 | 0 | 0 | 0 | 0 | 0 | 0 | 0 | 0 | 0 |
| Site-Generated Trips [veh/h] | 0 | 0 | 0 | 0 | 0 | 0 | 0 | 0 | 0 | 0 | 0 | 0 |
| Diverted Trips [veh/h] | 0 | 0 | 0 | 0 | 0 | 0 | 0 | 0 | 0 | 0 | 0 | 0 |
| Pass-by Trips [veh/h] | 0 | 0 | 0 | 0 | 0 | 0 | 0 | 0 | 0 | 0 | 0 | 0 |
| Existing Site Adjustment Volume [veh/h] | 0 | 0 | 0 | 0 | 0 | 0 | 0 | 0 | 0 | 0 | 0 | 0 |
| Other Volume [veh/h] | 0 | 0 | 0 | 0 | 0 | 0 | 0 | 0 | 0 | 0 | 0 | 0 |
| Right-Turn on Red Volume [veh/h] | 0 | 0 | 0 | 0 | 0 | 0 | 0 | 0 | 0 | 0 | 0 | 0 |
| Total Hourly Volume [veh/h] | 7 | 153 | 28 | 19 | 398 | 66 | 31 | 93 | 44 | 76 | 153 | 20 |
| Peak Hour Factor | 0.8530 | 0.8530 | 0.8530 | 0.8530 | 0.8530 | 0.8530 | 0.8530 | 0.8530 | 0.8530 | 0.8530 | 0.8530 | 0.8530 |
| Other Adjustment Factor | 1.0000 | 1.0000 | 1.0000 | 1.0000 | 1.0000 | 1.0000 | 1.0000 | 1.0000 | 1.0000 | 1.0000 | 1.0000 | 1.0000 |
| Total 15-Minute Volume [veh/h] | 2 | 45 | 8 | 6 | 117 | 19 | 9 | 27 | 13 | 22 | 45 | 6 |
| Total Analysis Volume [veh/h] | 8 | 179 | 33 | 22 | 467 | 77 | 36 | 109 | 52 | 89 | 179 | 23 |
| Presence of On-Street Parking | No | | No | No | | No | No | | No | No | | No |
| On-Street Parking Maneuver Rate [/h] | 0 | 0 | 0 | 0 | 0 | 0 | 0 | 0 | 0 | 0 | 0 | 0 |
| Local Bus Stopping Rate [/h] | 0 | 0 | 0 | 0 | 0 | 0 | 0 | 0 | 0 | 0 | 0 | 0 |
| Pedestrian Volume [ped/h] | 0 | | | 0 | | | 0 | | | 0 | | |
| Bicycle Volume [bicycles/h] | 0 | | | 0 | | | 0 | | | 0 | | |

**Intersection Settings**

| | |
|---|---|
| Located in CBD | No |
| Signal Coordination Group | - |
| Cycle Length [s] | 100 |
| Coordination Type | Time of Day Pattern Isolated |
| Actuation Type | Fully actuated |
| Offset [s] | 0.0 |
| Offset Reference | LagFO |
| Permissive Mode | SingleBand |
| Lost time [s] | 16.00 |

**Phasing & Timing**

| Control Type | Protecte | Permiss | Permiss | Protecte | Permiss | Permiss | Protecte | Permiss | Permiss | Protecte | Permiss | Permiss |
|---|---|---|---|---|---|---|---|---|---|---|---|---|
| Signal group | 5 | 2 | 0 | 1 | 6 | 0 | 3 | 8 | 0 | 7 | 4 | 0 |
| Auxiliary Signal Groups | | | | | | | | | | | | |
| Lead / Lag | Lead | - | - | Lead | - | - | Lead | - | - | Lead | - | - |
| Minimum Green [s] | 5 | 5 | 0 | 5 | 5 | 0 | 5 | 5 | 0 | 5 | 5 | 0 |
| Maximum Green [s] | 30 | 30 | 0 | 30 | 30 | 0 | 30 | 30 | 0 | 30 | 30 | 0 |
| Amber [s] | 4.4 | 4.4 | 0.0 | 4.4 | 4.4 | 0.0 | 4.1 | 4.1 | 0.0 | 4.1 | 4.1 | 0.0 |
| All red [s] | 1.0 | 1.0 | 0.0 | 1.0 | 1.0 | 0.0 | 1.0 | 1.0 | 0.0 | 1.0 | 1.0 | 0.0 |
| Split [s] | 15 | 40 | 0 | 12 | 37 | 0 | 11 | 37 | 0 | 11 | 37 | 0 |
| Vehicle Extension [s] | 3.0 | 3.0 | 0.0 | 3.0 | 3.0 | 0.0 | 3.0 | 3.0 | 0.0 | 3.0 | 3.0 | 0.0 |
| Walk [s] | 0 | 7 | 0 | 0 | 7 | 0 | 0 | 7 | 0 | 0 | 7 | 0 |
| Pedestrian Clearance [s] | 0 | 24 | 0 | 0 | 24 | 0 | 0 | 24 | 0 | 0 | 24 | 0 |
| I1, Start-Up Lost Time [s] | 2.0 | 2.0 | 0.0 | 2.0 | 2.0 | 0.0 | 2.0 | 2.0 | 0.0 | 2.0 | 2.0 | 0.0 |
| I2, Clearance Lost Time [s] | 3.4 | 3.4 | 0.0 | 3.4 | 3.4 | 0.0 | 3.1 | 3.1 | 0.0 | 3.1 | 3.1 | 0.0 |
| Minimum Recall | No | No | | No | No | | No | No | | No | No | |
| Maximum Recall | No | No | | No | No | | No | No | | No | No | |
| Pedestrian Recall | No | No | | No | No | | No | No | | No | No | |
| Detector Location [ft] | 0.0 | 0.0 | 0.0 | 0.0 | 0.0 | 0.0 | 0.0 | 0.0 | 0.0 | 0.0 | 0.0 | 0.0 |
| Detector Length [ft] | 0.0 | 0.0 | 0.0 | 0.0 | 0.0 | 0.0 | 0.0 | 0.0 | 0.0 | 0.0 | 0.0 | 0.0 |
| I, Upstream Filtering Factor | 1.00 | 1.00 | 1.00 | 1.00 | 1.00 | 1.00 | 1.00 | 1.00 | 1.00 | 1.00 | 1.00 | 1.00 |

**Exclusive Pedestrian Phase**

| | |
|---|---|
| Pedestrian Signal Group | 0 |
| Pedestrian Walk [s] | 0 |
| Pedestrian Clearance [s] | 0 |

**Lane Group Calculations**

| Lane Group | L | C | C | L | C | C | L | C | C | L | C | C |
|---|---|---|---|---|---|---|---|---|---|---|---|---|
| L, Total Lost Time per Cycle [s] | 5.40 | 5.40 | 5.40 | 5.40 | 5.40 | 5.40 | 5.10 | 5.10 | 5.10 | 5.10 | 5.10 | 5.10 |
| l1_p, Permitted Start-Up Lost Time [s] | 0.00 | 0.00 | 0.00 | 0.00 | 0.00 | 0.00 | 0.00 | 0.00 | 0.00 | 0.00 | 0.00 | 0.00 |
| l2, Clearance Lost Time [s] | 3.40 | 3.40 | 3.40 | 3.40 | 3.40 | 3.40 | 3.10 | 3.10 | 3.10 | 3.10 | 3.10 | 3.10 |
| g_i, Effective Green Time [s] | 0 | 8 | 8 | 1 | 8 | 8 | 2 | 4 | 4 | 3 | 6 | 6 |
| g / C, Green / Cycle | 0.01 | 0.21 | 0.21 | 0.03 | 0.23 | 0.23 | 0.04 | 0.11 | 0.11 | 0.08 | 0.15 | 0.15 |
| (v / s)_i Volume / Saturation Flow Rate | 0.00 | 0.06 | 0.06 | 0.01 | 0.15 | 0.15 | 0.02 | 0.04 | 0.05 | 0.05 | 0.05 | 0.06 |
| s, saturation flow rate [veh/h] | 1774 | 1863 | 1765 | 1774 | 1863 | 1772 | 1774 | 1863 | 1669 | 1774 | 1863 | 1790 |
| c, Capacity [veh/h] | 20 | 390 | 369 | 51 | 422 | 401 | 77 | 207 | 185 | 147 | 281 | 270 |
| d1, Uniform Delay [s] | 18.14 | 12.25 | 12.28 | 17.66 | 12.99 | 13.01 | 17.26 | 15.28 | 15.33 | 16.36 | 14.10 | 14.12 |
| k, delay calibration | 0.11 | 0.11 | 0.11 | 0.11 | 0.11 | 0.11 | 0.11 | 0.11 | 0.11 | 0.11 | 0.11 | 0.11 |
| I, Upstream Filtering Factor | 1.00 | 1.00 | 1.00 | 1.00 | 1.00 | 1.00 | 1.00 | 1.00 | 1.00 | 1.00 | 1.00 | 1.00 |
| d2, Incremental Delay [s] | 12.11 | 0.38 | 0.42 | 5.80 | 1.75 | 1.89 | 4.41 | 1.24 | 1.55 | 3.97 | 0.79 | 0.85 |
| d3, Initial Queue Delay [s] | 0.00 | 0.00 | 0.00 | 0.00 | 0.00 | 0.00 | 0.00 | 0.00 | 0.00 | 0.00 | 0.00 | 0.00 |
| Rp, platoon ratio | 1.00 | 1.00 | 1.00 | 1.00 | 1.00 | 1.00 | 1.00 | 1.00 | 1.00 | 1.00 | 1.00 | 1.00 |
| PF, progression factor | 1.00 | 1.00 | 1.00 | 1.00 | 1.00 | 1.00 | 1.00 | 1.00 | 1.00 | 1.00 | 1.00 | 1.00 |

**Lane Group Results**

| | | | | | | | | | | | | |
|---|---|---|---|---|---|---|---|---|---|---|---|---|
| X, volume / capacity | 0.40 | 0.27 | 0.28 | 0.44 | 0.66 | 0.66 | 0.47 | 0.40 | 0.43 | 0.61 | 0.36 | 0.37 |
| d, Delay for Lane Group [s/veh] | 30.24 | 12.63 | 12.69 | 23.46 | 14.75 | 14.90 | 21.67 | 16.51 | 16.88 | 20.33 | 14.89 | 14.97 |
| Lane Group LOS | C | B | B | C | B | B | C | B | B | C | B | B |
| Critical Lane Group | Yes | No | No | No | No | Yes | No | No | Yes | Yes | No | No |
| 50th-Percentile Queue Length [veh] | 0.12 | 0.58 | 0.57 | 0.23 | 1.70 | 1.65 | 0.34 | 0.59 | 0.57 | 0.75 | 0.66 | 0.65 |
| 50th-Percentile Queue Length [ft] | 3.06 | 14.54 | 14.31 | 5.71 | 42.50 | 41.17 | 8.48 | 14.63 | 14.37 | 18.74 | 16.59 | 16.35 |
| 95th-Percentile Queue Length [veh] | 0.22 | 1.05 | 1.03 | 0.41 | 3.06 | 2.96 | 0.61 | 1.05 | 1.03 | 1.35 | 1.19 | 1.18 |
| 95th-Percentile Queue Length [ft] | 5.50 | 26.17 | 25.77 | 10.28 | 76.50 | 74.10 | 15.27 | 26.34 | 25.86 | 33.74 | 29.87 | 29.43 |

**Movement, Approach, & Intersection Results**

| | | | | | | | | | | | | |
|---|---|---|---|---|---|---|---|---|---|---|---|---|
| d_M, Delay for Movement [s/veh] | 30.24 | 12.66 | 12.69 | 23.46 | 14.81 | 14.90 | 21.67 | 16.60 | 16.88 | 20.33 | 14.92 | 14.97 |
| Movement LOS | C | B | B | C | B | B | C | B | B | C | B | B |
| d_A, Approach Delay [s/veh] | 13.30 | | | 15.16 | | | 17.60 | | | 16.58 | | |
| Approach LOS | B | | | B | | | B | | | B | | |
| d_I, Intersection Delay [s/veh] | 15.54 | | | | | | | | | | | |
| Intersection LOS | B | | | | | | | | | | | |
| Intersection V/C | 0.446 | | | | | | | | | | | |

## Sequence

| | | | | | | | | | | | | | | | | |
|---|---|---|---|---|---|---|---|---|---|---|---|---|---|---|---|---|
| Ring 1 | 1 | 2 | 3 | 4 | - | - | - | - | - | - | - | - | - | - | - | - |
| Ring 2 | 5 | 6 | 7 | 8 | - | - | - | - | - | - | - | - | - | - | - | - |
| Ring 3 | - | - | - | - | - | - | - | - | - | - | - | - | - | - | - | - |
| Ring 4 | - | - | - | - | - | - | - | - | - | - | - | - | - | - | - | - |

**Intersection Level Of Service Report**
**Intersection 7: Alder Ave (NS) / Marygold Ave (EW)**

| | | | |
|---|---|---|---|
| Control Type: | All-way stop | Delay (sec / veh): | 11.7 |
| Analysis Method: | HCM 2010 | Level Of Service: | B |
| Analysis Period: | 15 minutes | | |

**Intersection Setup**

| Name | Alder Avenue | | | Alder Avenue | | | Marygold Avenue | | | Marygold Avenue | | |
|---|---|---|---|---|---|---|---|---|---|---|---|---|
| Approach | Northbound | | | Southbound | | | Eastbound | | | Westbound | | |
| Lane Configuration | | | | | | | | | | | | |
| Turning Movement | Left | Thru | Right | Left | Thru | Right | Left | Thru | Right | Left | Thru | Right |
| Lane Width [ft] | 12.00 | 12.00 | 12.00 | 12.00 | 12.00 | 12.00 | 12.00 | 12.00 | 12.00 | 12.00 | 12.00 | 12.00 |
| No. of Lanes in Pocket | 0 | 0 | 1 | 0 | 0 | 0 | 0 | 0 | 0 | 0 | 0 | 0 |
| Pocket Length [ft] | 100.00 | 100.00 | 200.00 | 100.00 | 100.00 | 100.00 | 100.00 | 100.00 | 100.00 | 100.00 | 100.00 | 100.00 |
| Speed [mph] | 40.00 | | | 40.00 | | | 35.00 | | | 25.00 | | |
| Grade [%] | 0.00 | | | 0.00 | | | 0.00 | | | 0.00 | | |
| Crosswalk | Yes | | | Yes | | | Yes | | | Yes | | |

**volumes**

| Name | Alder Avenue | | | Alder Avenue | | | Marygold Avenue | | | Marygold Avenue | | |
|---|---|---|---|---|---|---|---|---|---|---|---|---|
| Base Volume Input [veh/h] | 11 | 195 | 15 | 40 | 255 | 123 | 41 | 45 | 15 | 11 | 102 | 17 |
| Base Volume Adjustment Factor | 1.0000 | 1.0000 | 1.0000 | 1.0000 | 1.0000 | 1.0000 | 1.0000 | 1.0000 | 1.0000 | 1.0000 | 1.0000 | 1.0000 |
| Heavy Vehicles Percentage [%] | 2.00 | 2.00 | 2.00 | 2.00 | 2.00 | 2.00 | 2.00 | 2.00 | 2.00 | 2.00 | 2.00 | 2.00 |
| Growth Rate | 1.00 | 1.00 | 1.00 | 1.00 | 1.00 | 1.00 | 1.00 | 1.00 | 1.00 | 1.00 | 1.00 | 1.00 |
| In-Process Volume [veh/h] | 0 | 0 | 0 | 0 | 0 | 0 | 0 | 0 | 0 | 0 | 0 | 0 |
| Site-Generated Trips [veh/h] | 0 | 0 | 0 | 0 | 0 | 0 | 0 | 0 | 0 | 0 | 0 | 0 |
| Diverted Trips [veh/h] | 0 | 0 | 0 | 0 | 0 | 0 | 0 | 0 | 0 | 0 | 0 | 0 |
| Pass-by Trips [veh/h] | 0 | 0 | 0 | 0 | 0 | 0 | 0 | 0 | 0 | 0 | 0 | 0 |
| Existing Site Adjustment Volume [veh/h] | 0 | 0 | 0 | 0 | 0 | 0 | 0 | 0 | 0 | 0 | 0 | 0 |
| Other Volume [veh/h] | 0 | 0 | 0 | 0 | 0 | 0 | 0 | 0 | 0 | 0 | 0 | 0 |
| Total Hourly Volume [veh/h] | 11 | 195 | 15 | 40 | 255 | 123 | 41 | 45 | 15 | 11 | 102 | 17 |
| Peak Hour Factor | 0.9220 | 0.9220 | 0.9220 | 0.9220 | 0.9220 | 0.9220 | 0.9220 | 0.9220 | 0.9220 | 0.9220 | 0.9220 | 0.9220 |
| Other Adjustment Factor | 1.0000 | 1.0000 | 1.0000 | 1.0000 | 1.0000 | 1.0000 | 1.0000 | 1.0000 | 1.0000 | 1.0000 | 1.0000 | 1.0000 |
| Total 15-Minute Volume [veh/h] | 3 | 53 | 4 | 11 | 69 | 33 | 11 | 12 | 4 | 3 | 28 | 5 |
| Total Analysis Volume [veh/h] | 12 | 211 | 16 | 43 | 277 | 133 | 44 | 49 | 16 | 12 | 111 | 18 |
| Pedestrian Volume [ped/h] | 0 | | | 0 | | | 0 | | | 0 | | |

**Intersection Settings**

**Lanes**

**Movement, Approach, & Intersection Results**

| | | | | | | |
|---|---|---|---|---|---|---|
| 95th-Percentile Queue Length [veh] | 1.66 | 0.07 | 2.85 | 0.66 | 0.64 | 0.86 |
| 95th-Percentile Queue Length [ft] | 41.59 | 1.75 | 71.33 | 16.46 | 16.12 | 21.59 |
| Approach Delay [s/veh] | 11.65 | | 12.47 | | 10.17 | 10.45 |
| Approach LOS | B | | B | | B | B |
| Intersection Delay [s/veh] | 11.69 | | | | | |
| Intersection LOS | B | | | | | |

**Intersection Level Of Service Report**
**Intersection 8: Alder Ave (NS) / Valley Blvd (EW)**

| | | | |
|---|---|---|---|
| Control Type: | Signalized | Delay (sec / veh): | 26.4 |
| Analysis Method: | HCM 2010 | Level Of Service: | C |
| Analysis Period: | 15 minutes | Volume to Capacity (v/c): | 0.490 |

**Intersection Setup**

| Name | Alder Avenue | | | Alder Avenue | | | Valley Boulevard | | | | | |
|---|---|---|---|---|---|---|---|---|---|---|---|---|
| Approach | Northbound | | | Southbound | | | Eastbound | | | Westbound | | |
| Lane Configuration | | | | | | | | | | | | |
| Turning Movement | Left | Thru | Right | Left | Thru | Right | Left | Thru | Right | Left | Thru | Right |
| Lane Width [ft] | 12.00 | 12.00 | 12.00 | 12.00 | 12.00 | 12.00 | 12.00 | 12.00 | 12.00 | 12.00 | 12.00 | 12.00 |
| No. of Lanes in Pocket | 0 | 0 | 1 | 0 | 0 | 0 | 1 | 0 | 0 | 1 | 0 | 0 |
| Pocket Length [ft] | 100.00 | 100.00 | 55.00 | 100.00 | 100.00 | 100.00 | 100.00 | 100.00 | 100.00 | 100.00 | 100.00 | 100.00 |
| Speed [mph] | 40.00 | | | 40.00 | | | 40.00 | | | 30.00 | | |
| Grade [%] | 0.00 | | | 0.00 | | | 0.00 | | | 0.00 | | |
| Crosswalk | Yes | | | Yes | | | Yes | | | Yes | | |

**volumes**

| Name | Alder Avenue | | | Alder Avenue | | | Valley Boulevard | | | | | |
|---|---|---|---|---|---|---|---|---|---|---|---|---|
| Base Volume Input [veh/h] | 15 | 8 | 4 | 107 | 13 | 162 | 144 | 244 | 13 | 4 | 339 | 60 |
| Base Volume Adjustment Factor | 1.0000 | 1.0000 | 1.0000 | 1.0000 | 1.0000 | 1.0000 | 1.0000 | 1.0000 | 1.0000 | 1.0000 | 1.0000 | 1.0000 |
| Heavy Vehicles Percentage [%] | 2.00 | 2.00 | 2.00 | 2.00 | 2.00 | 2.00 | 4.00 | 4.00 | 4.00 | 4.00 | 4.00 | 4.00 |
| Growth Rate | 1.00 | 1.00 | 1.00 | 1.00 | 1.00 | 1.00 | 1.00 | 1.00 | 1.00 | 1.00 | 1.00 | 1.00 |
| In-Process Volume [veh/h] | 0 | 0 | 0 | 0 | 0 | 0 | 0 | 0 | 0 | 0 | 0 | 0 |
| Site-Generated Trips [veh/h] | 0 | 0 | 0 | 0 | 0 | 0 | 0 | 0 | 0 | 0 | 0 | 0 |
| Diverted Trips [veh/h] | 0 | 0 | 0 | 0 | 0 | 0 | 0 | 0 | 0 | 0 | 0 | 0 |
| Pass-by Trips [veh/h] | 0 | 0 | 0 | 0 | 0 | 0 | 0 | 0 | 0 | 0 | 0 | 0 |
| Existing Site Adjustment Volume [veh/h] | 0 | 0 | 0 | 0 | 0 | 0 | 0 | 0 | 0 | 0 | 0 | 0 |
| Other Volume [veh/h] | 0 | 0 | 0 | 0 | 0 | 0 | 0 | 0 | 0 | 0 | 0 | 0 |
| Right-Turn on Red Volume [veh/h] | 0 | 0 | 0 | 0 | 0 | 0 | 0 | 0 | 0 | 0 | 0 | 0 |
| Total Hourly Volume [veh/h] | 15 | 8 | 4 | 107 | 13 | 162 | 144 | 244 | 13 | 4 | 339 | 60 |
| Peak Hour Factor | 0.8890 | 0.8890 | 0.8890 | 0.8890 | 0.8890 | 0.8890 | 0.8890 | 0.8890 | 0.8890 | 0.8890 | 0.8890 | 0.8890 |
| Other Adjustment Factor | 1.0000 | 1.0000 | 1.0000 | 1.0000 | 1.0000 | 1.0000 | 1.0000 | 1.0000 | 1.0000 | 1.0000 | 1.0000 | 1.0000 |
| Total 15-Minute Volume [veh/h] | 4 | 2 | 1 | 30 | 4 | 46 | 40 | 69 | 4 | 1 | 95 | 17 |
| Total Analysis Volume [veh/h] | 17 | 9 | 4 | 120 | 15 | 182 | 162 | 274 | 15 | 4 | 381 | 67 |
| Presence of On-Street Parking | No | | No | No | | No | No | | No | No | | No |
| On-Street Parking Maneuver Rate [/h] | 0 | 0 | 0 | 0 | 0 | 0 | 0 | 0 | 0 | 0 | 0 | 0 |
| Local Bus Stopping Rate [/h] | 0 | 0 | 0 | 0 | 0 | 0 | 0 | 0 | 0 | 0 | 0 | 0 |
| Pedestrian Volume [ped/h] | 0 | | | 0 | | | 0 | | | 0 | | |
| Bicycle Volume [bicycles/h] | 0 | | | 0 | | | 0 | | | 0 | | |

**Intersection Settings**

| | |
|---|---|
| Located in CBD | No |
| Signal Coordination Group | 3 - EW - Valley |
| Cycle Length [s] | 120 |
| Coordination Type | Time of Day Pattern Coordinated |
| Actuation Type | Fully actuated |
| Offset [s] | 76.0 |
| Offset Reference | LagFO |
| Permissive Mode | SingleBand |
| Lost time [s] | 12.00 |

**Phasing & Timing**

| Control Type | Permiss | Permiss | Permiss | Permiss | Permiss | Permiss | Protecte | Permiss | Permiss | Protecte | Permiss | Permiss |
|---|---|---|---|---|---|---|---|---|---|---|---|---|
| Signal group | 0 | 2 | 0 | 0 | 6 | 0 | 3 | 8 | 0 | 7 | 4 | 0 |
| Auxiliary Signal Groups | | | | | | | | | | | | |
| Lead / Lag | - | - | - | - | - | - | Lead | - | - | Lead | - | - |
| Minimum Green [s] | 0 | 5 | 0 | 0 | 5 | 0 | 5 | 5 | 0 | 5 | 5 | 0 |
| Maximum Green [s] | 0 | 30 | 0 | 0 | 30 | 0 | 30 | 30 | 0 | 30 | 30 | 0 |
| Amber [s] | 0.0 | 4.4 | 0.0 | 0.0 | 4.4 | 0.0 | 4.4 | 4.4 | 0.0 | 3.7 | 3.7 | 0.0 |
| All red [s] | 0.0 | 1.0 | 0.0 | 0.0 | 1.0 | 0.0 | 1.0 | 1.0 | 0.0 | 1.0 | 1.0 | 0.0 |
| Split [s] | 0 | 51 | 0 | 0 | 51 | 0 | 27 | 59 | 0 | 10 | 42 | 0 |
| Vehicle Extension [s] | 0.0 | 3.0 | 0.0 | 0.0 | 3.0 | 0.0 | 3.0 | 3.0 | 0.0 | 3.0 | 3.0 | 0.0 |
| Walk [s] | 0 | 7 | 0 | 0 | 7 | 0 | 0 | 7 | 0 | 0 | 7 | 0 |
| Pedestrian Clearance [s] | 0 | 25 | 0 | 0 | 29 | 0 | 0 | 22 | 0 | 0 | 21 | 0 |
| I1, Start-Up Lost Time [s] | 0.0 | 2.0 | 0.0 | 0.0 | 2.0 | 0.0 | 2.0 | 2.0 | 0.0 | 2.0 | 2.0 | 0.0 |
| I2, Clearance Lost Time [s] | 0.0 | 3.4 | 0.0 | 0.0 | 3.4 | 0.0 | 3.4 | 3.4 | 0.0 | 2.7 | 2.7 | 0.0 |
| Minimum Recall | | No | | | No | | No | No | | No | No | |
| Maximum Recall | | No | | | No | | No | No | | No | No | |
| Pedestrian Recall | | No | | | No | | No | No | | No | No | |
| Detector Location [ft] | 0.0 | 0.0 | 0.0 | 0.0 | 0.0 | 0.0 | 0.0 | 0.0 | 0.0 | 0.0 | 0.0 | 0.0 |
| Detector Length [ft] | 0.0 | 0.0 | 0.0 | 0.0 | 0.0 | 0.0 | 0.0 | 0.0 | 0.0 | 0.0 | 0.0 | 0.0 |
| I, Upstream Filtering Factor | 1.00 | 1.00 | 1.00 | 1.00 | 1.00 | 1.00 | 1.00 | 1.00 | 1.00 | 1.00 | 1.00 | 1.00 |

**Exclusive Pedestrian Phase**

| | |
|---|---|
| Pedestrian Signal Group | 0 |
| Pedestrian Walk [s] | 0 |
| Pedestrian Clearance [s] | 0 |

**Lane Group Calculations**

| Lane Group | C | R | C | L | C | C | L | C | C |
|---|---|---|---|---|---|---|---|---|---|
| L, Total Lost Time per Cycle [s] | 5.40 | 5.40 | 5.40 | 5.40 | 5.40 | 5.40 | 4.70 | 4.70 | 4.70 |
| l1_p, Permitted Start-Up Lost Time [s] | 2.00 | 0.00 | 2.00 | 0.00 | 0.00 | 0.00 | 0.00 | 0.00 | 0.00 |
| l2, Clearance Lost Time [s] | 3.40 | 3.40 | 3.40 | 3.40 | 3.40 | 3.40 | 2.70 | 2.70 | 2.70 |
| g_i, Effective Green Time [s] | 29 | 29 | 29 | 13 | 75 | 75 | 1 | 63 | 63 |
| g / C, Green / Cycle | 0.24 | 0.24 | 0.24 | 0.11 | 0.63 | 0.63 | 0.01 | 0.52 | 0.52 |
| (v / s)_i Volume / Saturation Flow Rate | 0.03 | 0.00 | 0.22 | 0.09 | 0.08 | 0.08 | 0.00 | 0.12 | 0.13 |
| s, saturation flow rate [veh/h] | 948 | 1583 | 1436 | 1740 | 1827 | 1794 | 1740 | 1827 | 1734 |
| c, Capacity [veh/h] | 277 | 380 | 386 | 191 | 1142 | 1122 | 9 | 952 | 903 |
| d1, Uniform Delay [s] | 35.15 | 34.73 | 45.18 | 50.25 | 3.88 | 3.88 | 59.39 | 9.62 | 9.63 |
| k, delay calibration | 0.11 | 0.11 | 0.14 | 0.11 | 0.50 | 0.50 | 0.11 | 0.50 | 0.50 |
| I, Upstream Filtering Factor | 1.00 | 1.00 | 1.00 | 1.00 | 1.00 | 1.00 | 1.00 | 1.00 | 1.00 |
| d2, Incremental Delay [s] | 0.15 | 0.01 | 5.59 | 9.98 | 0.23 | 0.24 | 28.77 | 0.60 | 0.64 |
| d3, Initial Queue Delay [s] | 0.00 | 0.00 | 0.00 | 0.00 | 0.00 | 0.00 | 0.00 | 0.00 | 0.00 |
| Rp, platoon ratio | 1.00 | 1.00 | 1.00 | 1.33 | 1.33 | 1.33 | 1.33 | 1.33 | 1.33 |
| PF, progression factor | 1.00 | 1.00 | 1.00 | 1.00 | 1.00 | 1.00 | 1.00 | 1.00 | 1.00 |

**Lane Group Results**

| | | | | | | | | | |
|---|---|---|---|---|---|---|---|---|---|
| X, volume / capacity | 0.09 | 0.01 | 0.82 | 0.85 | 0.13 | 0.13 | 0.43 | 0.24 | 0.24 |
| d, Delay for Lane Group [s/veh] | 35.29 | 34.74 | 50.76 | 60.23 | 4.11 | 4.12 | 88.16 | 10.21 | 10.27 |
| Lane Group LOS | D | C | D | E | A | A | F | B | B |
| Critical Lane Group | No | No | Yes | Yes | No | No | No | No | Yes |
| 50th-Percentile Queue Length [veh] | 0.59 | 0.09 | 9.59 | 5.02 | 0.68 | 0.68 | 0.20 | 2.22 | 2.15 |
| 50th-Percentile Queue Length [ft] | 14.79 | 2.23 | 239.68 | 125.54 | 17.08 | 16.90 | 4.88 | 55.58 | 53.81 |
| 95th-Percentile Queue Length [veh] | 1.07 | 0.16 | 14.67 | 8.70 | 1.23 | 1.22 | 0.35 | 4.00 | 3.87 |
| 95th-Percentile Queue Length [ft] | 26.63 | 4.02 | 366.63 | 217.41 | 30.75 | 30.42 | 8.78 | 100.04 | 96.86 |

**Movement, Approach, & Intersection Results**

| | | | | | | | | | | | | |
|---|---|---|---|---|---|---|---|---|---|---|---|---|
| d_M, Delay for Movement [s/veh] | 35.29 | 35.29 | 34.74 | 50.76 | 50.76 | 50.76 | 60.23 | 4.12 | 4.12 | 88.16 | 10.23 | 10.27 |
| Movement LOS | D | D | C | D | D | D | E | A | A | F | B | B |
| d_A, Approach Delay [s/veh] | 35.22 | | | 50.76 | | | 24.27 | | | 10.93 | | |
| Approach LOS | D | | | D | | | C | | | B | | |
| d_I, Intersection Delay [s/veh] | 26.43 | | | | | | | | | | | |
| Intersection LOS | C | | | | | | | | | | | |
| Intersection V/C | 0.490 | | | | | | | | | | | |

## Sequence

| | | | | | | | | | | | | | | | | |
|---|---|---|---|---|---|---|---|---|---|---|---|---|---|---|---|---|
| Ring 1 | 2 | 3 | 4 | - | - | - | - | - | - | - | - | - | - | - | - | - |
| Ring 2 | 6 | 7 | 8 | - | - | - | - | - | - | - | - | - | - | - | - | - |
| Ring 3 | - | - | - | - | - | - | - | - | - | - | - | - | - | - | - | - |
| Ring 4 | - | - | - | - | - | - | - | - | - | - | - | - | - | - | - | - |

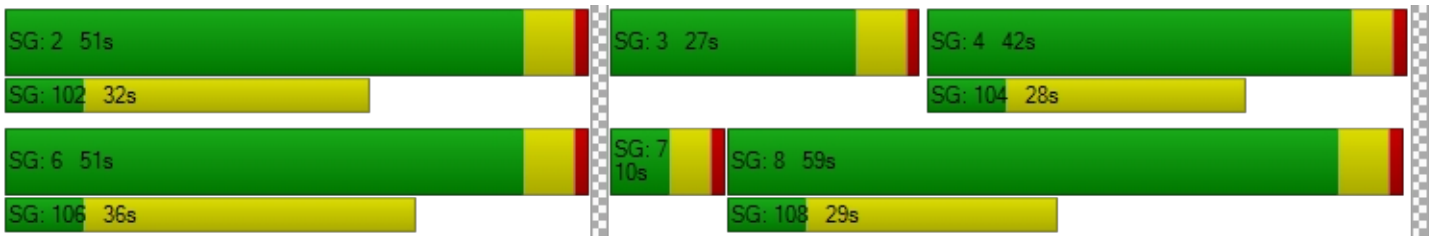

**Intersection Level Of Service Report**
**Intersection 9: Locust Ave (NS) / Marygold Ave (EW)**

| | | | |
|---|---|---|---|
| Control Type: | All-way stop | Delay (sec / veh): | 8.8 |
| Analysis Method: | HCM 2010 | Level Of Service: | A |
| Analysis Period: | 15 minutes | | |

**Intersection Setup**

| Name | Locust Avenue | | | Locust Avenue | | | Marygold Avenue | | | | | |
|---|---|---|---|---|---|---|---|---|---|---|---|---|
| Approach | Northbound | | | Southbound | | | Eastbound | | | Westbound | | |
| Lane Configuration | | | | | | | | | | | | |
| Turning Movement | Left | Thru | Right | Left | Thru | Right | Left | Thru | Right | Left | Thru | Right |
| Lane Width [ft] | 12.00 | 12.00 | 12.00 | 12.00 | 12.00 | 12.00 | 12.00 | 12.00 | 12.00 | 12.00 | 12.00 | 12.00 |
| No. of Lanes in Pocket | 0 | 0 | 1 | 0 | 0 | 1 | 0 | 0 | 0 | 0 | 0 | 0 |
| Pocket Length [ft] | 100.00 | 100.00 | 100.00 | 100.00 | 100.00 | 325.00 | 100.00 | 100.00 | 100.00 | 100.00 | 100.00 | 100.00 |
| Speed [mph] | 30.00 | | | 40.00 | | | 30.00 | | | 30.00 | | |
| Grade [%] | 0.00 | | | 0.00 | | | 0.00 | | | 0.00 | | |
| Crosswalk | Yes | | | Yes | | | Yes | | | Yes | | |

**volumes**

| Name | Locust Avenue | | | Locust Avenue | | | Marygold Avenue | | | | | |
|---|---|---|---|---|---|---|---|---|---|---|---|---|
| Base Volume Input [veh/h] | 13 | 96 | 11 | 14 | 153 | 47 | 16 | 68 | 19 | 5 | 51 | 5 |
| Base Volume Adjustment Factor | 1.0000 | 1.0000 | 1.0000 | 1.0000 | 1.0000 | 1.0000 | 1.0000 | 1.0000 | 1.0000 | 1.0000 | 1.0000 | 1.0000 |
| Heavy Vehicles Percentage [%] | 2.00 | 2.00 | 2.00 | 2.00 | 2.00 | 2.00 | 2.00 | 2.00 | 2.00 | 2.00 | 2.00 | 2.00 |
| Growth Rate | 1.00 | 1.00 | 1.00 | 1.00 | 1.00 | 1.00 | 1.00 | 1.00 | 1.00 | 1.00 | 1.00 | 1.00 |
| In-Process Volume [veh/h] | 0 | 0 | 0 | 0 | 0 | 0 | 0 | 0 | 0 | 0 | 0 | 0 |
| Site-Generated Trips [veh/h] | 0 | 0 | 0 | 0 | 0 | 0 | 0 | 0 | 0 | 0 | 0 | 0 |
| Diverted Trips [veh/h] | 0 | 0 | 0 | 0 | 0 | 0 | 0 | 0 | 0 | 0 | 0 | 0 |
| Pass-by Trips [veh/h] | 0 | 0 | 0 | 0 | 0 | 0 | 0 | 0 | 0 | 0 | 0 | 0 |
| Existing Site Adjustment Volume [veh/h] | 0 | 0 | 0 | 0 | 0 | 0 | 0 | 0 | 0 | 0 | 0 | 0 |
| Other Volume [veh/h] | 0 | 0 | 0 | 0 | 0 | 0 | 0 | 0 | 0 | 0 | 0 | 0 |
| Total Hourly Volume [veh/h] | 13 | 96 | 11 | 14 | 153 | 47 | 16 | 68 | 19 | 5 | 51 | 5 |
| Peak Hour Factor | 0.9500 | 0.9500 | 0.9500 | 0.9500 | 0.9500 | 0.9500 | 0.9500 | 0.9500 | 0.9500 | 0.9500 | 0.9500 | 0.9500 |
| Other Adjustment Factor | 1.0000 | 1.0000 | 1.0000 | 1.0000 | 1.0000 | 1.0000 | 1.0000 | 1.0000 | 1.0000 | 1.0000 | 1.0000 | 1.0000 |
| Total 15-Minute Volume [veh/h] | 3 | 25 | 3 | 4 | 40 | 12 | 4 | 18 | 5 | 1 | 13 | 1 |
| Total Analysis Volume [veh/h] | 14 | 101 | 12 | 15 | 161 | 49 | 17 | 72 | 20 | 5 | 54 | 5 |
| Pedestrian Volume [ped/h] | 0 | | | 0 | | | 0 | | | 0 | | |

**Intersection Settings**

**Lanes**

**Movement, Approach, & Intersection Results**

| | | | | | | |
|---|---|---|---|---|---|---|
| 95th-Percentile Queue Length [veh] | 0.60 | 0.05 | 0.99 | 0.19 | 0.50 | 0.28 |
| 95th-Percentile Queue Length [ft] | 15.00 | 1.14 | 24.84 | 4.77 | 12.62 | 7.12 |
| Approach Delay [s/veh] | 8.85 | | 9.09 | | 8.59 | 8.36 |
| Approach LOS | A | | A | | A | A |
| Intersection Delay [s/veh] | 8.84 | | | | | |
| Intersection LOS | A | | | | | |

**Intersection Level Of Service Report**
**Intersection 10: Locust Ave (NS) / Valley Blvd (EW)**

| | | | |
|---|---|---|---|
| Control Type: | Signalized | Delay (sec / veh): | 18.1 |
| Analysis Method: | HCM 2010 | Level Of Service: | B |
| Analysis Period: | 15 minutes | Volume to Capacity (v/c): | 0.318 |

**Intersection Setup**

| Name | Locust Avenue | | | Locust Avenue | | | Valley Boulevard | | | Valley Boulevard | | |
|---|---|---|---|---|---|---|---|---|---|---|---|---|
| Approach | Northbound | | | Southbound | | | Eastbound | | | Westbound | | |
| Lane Configuration | | | | | | | | | | | | |
| Turning Movement | Left | Thru | Right | Left | Thru | Right | Left | Thru | Right | Left | Thru | Right |
| Lane Width [ft] | 12.00 | 12.00 | 12.00 | 12.00 | 12.00 | 12.00 | 12.00 | 12.00 | 12.00 | 12.00 | 12.00 | 12.00 |
| No. of Lanes in Pocket | 0 | 0 | 0 | 0 | 0 | 0 | 1 | 0 | 0 | 1 | 0 | 0 |
| Pocket Length [ft] | 100.00 | 100.00 | 100.00 | 100.00 | 100.00 | 100.00 | 100.00 | 100.00 | 100.00 | 200.00 | 100.00 | 100.00 |
| Speed [mph] | 30.00 | | | 40.00 | | | 45.00 | | | 45.00 | | |
| Grade [%] | 0.00 | | | 0.00 | | | 0.00 | | | 0.00 | | |
| Crosswalk | Yes | | | Yes | | | No | | | Yes | | |

**volumes**

| Name | Locust Avenue | | | Locust Avenue | | | Valley Boulevard | | | Valley Boulevard | | |
|---|---|---|---|---|---|---|---|---|---|---|---|---|
| Base Volume Input [veh/h] | 1 | 5 | 16 | 87 | 5 | 78 | 41 | 274 | 3 | 48 | 385 | 58 |
| Base Volume Adjustment Factor | 1.0000 | 1.0000 | 1.0000 | 1.0000 | 1.0000 | 1.0000 | 1.0000 | 1.0000 | 1.0000 | 1.0000 | 1.0000 | 1.0000 |
| Heavy Vehicles Percentage [%] | 2.00 | 2.00 | 2.00 | 2.00 | 2.00 | 2.00 | 4.00 | 4.00 | 4.00 | 4.00 | 4.00 | 4.00 |
| Growth Rate | 1.00 | 1.00 | 1.00 | 1.00 | 1.00 | 1.00 | 1.00 | 1.00 | 1.00 | 1.00 | 1.00 | 1.00 |
| In-Process Volume [veh/h] | 0 | 0 | 0 | 0 | 0 | 0 | 0 | 0 | 0 | 0 | 0 | 0 |
| Site-Generated Trips [veh/h] | 0 | 0 | 0 | 0 | 0 | 0 | 0 | 0 | 0 | 0 | 0 | 0 |
| Diverted Trips [veh/h] | 0 | 0 | 0 | 0 | 0 | 0 | 0 | 0 | 0 | 0 | 0 | 0 |
| Pass-by Trips [veh/h] | 0 | 0 | 0 | 0 | 0 | 0 | 0 | 0 | 0 | 0 | 0 | 0 |
| Existing Site Adjustment Volume [veh/h] | 0 | 0 | 0 | 0 | 0 | 0 | 0 | 0 | 0 | 0 | 0 | 0 |
| Other Volume [veh/h] | 0 | 0 | 0 | 0 | 0 | 0 | 0 | 0 | 0 | 0 | 0 | 0 |
| Right-Turn on Red Volume [veh/h] | 0 | 0 | 0 | 0 | 0 | 0 | 0 | 0 | 0 | 0 | 0 | 0 |
| Total Hourly Volume [veh/h] | 1 | 5 | 16 | 87 | 5 | 78 | 41 | 274 | 3 | 48 | 385 | 58 |
| Peak Hour Factor | 0.9100 | 0.9100 | 0.9100 | 0.9100 | 0.9100 | 0.9100 | 0.9100 | 0.9100 | 0.9100 | 0.9100 | 0.9100 | 0.9100 |
| Other Adjustment Factor | 1.0000 | 1.0000 | 1.0000 | 1.0000 | 1.0000 | 1.0000 | 1.0000 | 1.0000 | 1.0000 | 1.0000 | 1.0000 | 1.0000 |
| Total 15-Minute Volume [veh/h] | 0 | 1 | 4 | 24 | 1 | 21 | 11 | 75 | 1 | 13 | 106 | 16 |
| Total Analysis Volume [veh/h] | 1 | 5 | 18 | 96 | 5 | 86 | 45 | 301 | 3 | 53 | 423 | 64 |
| Presence of On-Street Parking | No | | No | No | | No | No | | No | No | | No |
| On-Street Parking Maneuver Rate [/h] | 0 | 0 | 0 | 0 | 0 | 0 | 0 | 0 | 0 | 0 | 0 | 0 |
| Local Bus Stopping Rate [/h] | 0 | 0 | 0 | 0 | 0 | 0 | 0 | 0 | 0 | 0 | 0 | 0 |
| Pedestrian Volume [ped/h] | 0 | | | 0 | | | 0 | | | 0 | | |
| Bicycle Volume [bicycles/h] | 0 | | | 0 | | | 0 | | | 0 | | |

**Intersection Settings**

| | |
|---|---|
| Located in CBD | No |
| Signal Coordination Group | 3 - EW - Valley |
| Cycle Length [s] | 120 |
| Coordination Type | Time of Day Pattern Coordinated |
| Actuation Type | Fully actuated |
| Offset [s] | 81.0 |
| Offset Reference | LagFO |
| Permissive Mode | SingleBand |
| Lost time [s] | 12.00 |

**Phasing & Timing**

| Control Type | Permiss | Permiss | Permiss | Permiss | Permiss | Permiss | Protecte | Permiss | Permiss | Protecte | Permiss | Permiss |
|---|---|---|---|---|---|---|---|---|---|---|---|---|
| Signal group | 0 | 2 | 0 | 0 | 6 | 0 | 3 | 8 | 0 | 7 | 4 | 0 |
| Auxiliary Signal Groups | | | | | | | | | | | | |
| Lead / Lag | - | - | - | - | - | - | Lead | - | - | Lead | - | - |
| Minimum Green [s] | 0 | 5 | 0 | 0 | 5 | 0 | 5 | 5 | 0 | 5 | 5 | 0 |
| Maximum Green [s] | 0 | 30 | 0 | 0 | 30 | 0 | 30 | 30 | 0 | 30 | 30 | 0 |
| Amber [s] | 0.0 | 3.7 | 0.0 | 0.0 | 4.4 | 0.0 | 4.8 | 4.8 | 0.0 | 4.8 | 4.8 | 0.0 |
| All red [s] | 0.0 | 1.0 | 0.0 | 0.0 | 1.0 | 0.0 | 1.0 | 1.0 | 0.0 | 1.0 | 1.0 | 0.0 |
| Split [s] | 0 | 44 | 0 | 0 | 44 | 0 | 15 | 60 | 0 | 16 | 61 | 0 |
| Vehicle Extension [s] | 0.0 | 3.0 | 0.0 | 0.0 | 3.0 | 0.0 | 3.0 | 3.0 | 0.0 | 3.0 | 3.0 | 0.0 |
| Walk [s] | 0 | 7 | 0 | 0 | 7 | 0 | 0 | 7 | 0 | 0 | 7 | 0 |
| Pedestrian Clearance [s] | 0 | 26 | 0 | 0 | 10 | 0 | 0 | 16 | 0 | 0 | 19 | 0 |
| I1, Start-Up Lost Time [s] | 0.0 | 2.0 | 0.0 | 0.0 | 2.0 | 0.0 | 2.0 | 2.0 | 0.0 | 2.0 | 2.0 | 0.0 |
| I2, Clearance Lost Time [s] | 0.0 | 2.7 | 0.0 | 0.0 | 3.4 | 0.0 | 3.8 | 3.8 | 0.0 | 3.8 | 3.8 | 0.0 |
| Minimum Recall | | No | | | No | | No | No | | No | No | |
| Maximum Recall | | No | | | No | | No | No | | No | No | |
| Pedestrian Recall | | No | | | No | | No | No | | No | No | |
| Detector Location [ft] | 0.0 | 0.0 | 0.0 | 0.0 | 0.0 | 0.0 | 0.0 | 0.0 | 0.0 | 0.0 | 0.0 | 0.0 |
| Detector Length [ft] | 0.0 | 0.0 | 0.0 | 0.0 | 0.0 | 0.0 | 0.0 | 0.0 | 0.0 | 0.0 | 0.0 | 0.0 |
| I, Upstream Filtering Factor | 1.00 | 1.00 | 1.00 | 1.00 | 1.00 | 1.00 | 1.00 | 1.00 | 1.00 | 1.00 | 1.00 | 1.00 |

**Exclusive Pedestrian Phase**

| | |
|---|---|
| Pedestrian Signal Group | 0 |
| Pedestrian Walk [s] | 0 |
| Pedestrian Clearance [s] | 0 |

**Lane Group Calculations**

| Lane Group | C | C | L | C | C | L | C | C |
|---|---|---|---|---|---|---|---|---|
| L, Total Lost Time per Cycle [s] | 4.70 | 5.40 | 5.80 | 5.80 | 5.80 | 5.80 | 5.80 | 5.80 |
| l1_p, Permitted Start-Up Lost Time [s] | 2.00 | 2.00 | 0.00 | 0.00 | 0.00 | 0.00 | 0.00 | 0.00 |
| l2, Clearance Lost Time [s] | 0.00 | 3.40 | 3.80 | 3.80 | 3.80 | 3.80 | 3.80 | 3.80 |
| g_i, Effective Green Time [s] | 17 | 17 | 4 | 81 | 81 | 5 | 82 | 82 |
| g / C, Green / Cycle | 0.15 | 0.14 | 0.03 | 0.68 | 0.68 | 0.04 | 0.68 | 0.68 |
| (v / s)_i Volume / Saturation Flow Rate | 0.01 | 0.12 | 0.03 | 0.08 | 0.08 | 0.03 | 0.14 | 0.14 |
| s, saturation flow rate [veh/h] | 1680 | 1518 | 1740 | 1827 | 1821 | 1740 | 1827 | 1744 |
| c, Capacity [veh/h] | 247 | 256 | 60 | 1240 | 1236 | 70 | 1251 | 1194 |
| d1, Uniform Delay [s] | 44.50 | 50.51 | 56.66 | 1.88 | 1.88 | 56.12 | 1.72 | 1.72 |
| k, delay calibration | 0.11 | 0.11 | 0.11 | 0.50 | 0.50 | 0.11 | 0.50 | 0.50 |
| I, Upstream Filtering Factor | 1.00 | 1.00 | 1.00 | 1.00 | 1.00 | 1.00 | 1.00 | 1.00 |
| d2, Incremental Delay [s] | 0.17 | 3.97 | 16.62 | 0.20 | 0.20 | 14.79 | 0.36 | 0.38 |
| d3, Initial Queue Delay [s] | 0.00 | 0.00 | 0.00 | 0.00 | 0.00 | 0.00 | 0.00 | 0.00 |
| Rp, platoon ratio | 1.00 | 1.00 | 1.33 | 1.33 | 1.33 | 1.33 | 1.33 | 1.33 |
| PF, progression factor | 1.00 | 1.00 | 1.00 | 1.00 | 1.00 | 1.00 | 1.00 | 1.00 |

**Lane Group Results**

| | | | | | | | | |
|---|---|---|---|---|---|---|---|---|
| X, volume / capacity | 0.10 | 0.73 | 0.75 | 0.12 | 0.12 | 0.75 | 0.20 | 0.20 |
| d, Delay for Lane Group [s/veh] | 44.67 | 54.48 | 73.29 | 2.08 | 2.08 | 70.91 | 2.08 | 2.10 |
| Lane Group LOS | D | D | E | A | A | E | A | A |
| Critical Lane Group | No | Yes | Yes | No | No | No | No | Yes |
| 50th-Percentile Queue Length [veh] | 0.64 | 5.68 | 1.58 | 0.40 | 0.40 | 1.82 | 0.61 | 0.60 |
| 50th-Percentile Queue Length [ft] | 15.88 | 142.00 | 39.62 | 9.95 | 9.93 | 45.53 | 15.37 | 14.96 |
| 95th-Percentile Queue Length [veh] | 1.14 | 9.59 | 2.85 | 0.72 | 0.72 | 3.28 | 1.11 | 1.08 |
| 95th-Percentile Queue Length [ft] | 28.58 | 239.72 | 71.31 | 17.90 | 17.88 | 81.95 | 27.67 | 26.94 |

**Movement, Approach, & Intersection Results**

| | | | | | | | | | | | | |
|---|---|---|---|---|---|---|---|---|---|---|---|---|
| d_M, Delay for Movement [s/veh] | 44.67 | 44.67 | 44.67 | 54.48 | 54.48 | 54.48 | 73.29 | 2.08 | 2.08 | 70.91 | 2.09 | 2.10 |
| Movement LOS | D | D | D | D | D | D | E | A | A | E | A | A |
| d_A, Approach Delay [s/veh] | 44.67 | | | 54.48 | | | 11.26 | | | 8.84 | | |
| Approach LOS | D | | | D | | | B | | | A | | |
| d_I, Intersection Delay [s/veh] | 18.15 | | | | | | | | | | | |
| Intersection LOS | B | | | | | | | | | | | |
| Intersection V/C | 0.318 | | | | | | | | | | | |

## Sequence

| | | | | | | | | | | | | | | | | |
|---|---|---|---|---|---|---|---|---|---|---|---|---|---|---|---|---|
| Ring 1 | 2 | 3 | 4 | - | - | - | - | - | - | - | - | - | - | - | - | - |
| Ring 2 | 6 | 7 | 8 | - | - | - | - | - | - | - | - | - | - | - | - | - |
| Ring 3 | - | - | - | - | - | - | - | - | - | - | - | - | - | - | - | - |
| Ring 4 | - | - | - | - | - | - | - | - | - | - | - | - | - | - | - | - |

**Intersection Level Of Service Report**
**Intersection 11: Cedar Ave (NS) / San Bernardino Ave (EW)**

| | | | |
|---|---|---|---|
| Control Type: | Signalized | Delay (sec / veh): | 18.7 |
| Analysis Method: | HCM 2010 | Level Of Service: | B |
| Analysis Period: | 15 minutes | Volume to Capacity (v/c): | 0.484 |

**Intersection Setup**

| Name | Cedar Avenue | | | Cedar Avenue | | | | | | San Bernardino Avenue | | |
|---|---|---|---|---|---|---|---|---|---|---|---|---|
| Approach | Northbound | | | Southbound | | | Eastbound | | | Westbound | | |
| Lane Configuration | | | | | | | | | | | | |
| Turning Movement | Left | Thru | Right | Left | Thru | Right | Left | Thru | Right | Left | Thru | Right |
| Lane Width [ft] | 12.00 | 12.00 | 12.00 | 12.00 | 12.00 | 12.00 | 12.00 | 12.00 | 12.00 | 12.00 | 12.00 | 12.00 |
| No. of Lanes in Pocket | 1 | 0 | 0 | 1 | 0 | 0 | 1 | 0 | 1 | 1 | 0 | 0 |
| Pocket Length [ft] | 125.00 | 100.00 | 100.00 | 125.00 | 100.00 | 100.00 | 100.00 | 100.00 | 100.00 | 100.00 | 100.00 | 100.00 |
| Speed [mph] | 40.00 | | | 40.00 | | | 30.00 | | | 40.00 | | |
| Grade [%] | 0.00 | | | 0.00 | | | 0.00 | | | 0.00 | | |
| Crosswalk | Yes | | | Yes | | | Yes | | | Yes | | |

**volumes**

| Name | Cedar Avenue | | | Cedar Avenue | | | | | | San Bernardino Avenue | | |
|---|---|---|---|---|---|---|---|---|---|---|---|---|
| Base Volume Input [veh/h] | 55 | 664 | 38 | 94 | 875 | 39 | 18 | 110 | 29 | 52 | 112 | 54 |
| Base Volume Adjustment Factor | 1.0000 | 1.0000 | 1.0000 | 1.0000 | 1.0000 | 1.0000 | 1.0000 | 1.0000 | 1.0000 | 1.0000 | 1.0000 | 1.0000 |
| Heavy Vehicles Percentage [%] | 4.00 | 4.00 | 4.00 | 4.00 | 4.00 | 4.00 | 2.00 | 2.00 | 2.00 | 2.00 | 2.00 | 2.00 |
| Growth Rate | 1.00 | 1.00 | 1.00 | 1.00 | 1.00 | 1.00 | 1.00 | 1.00 | 1.00 | 1.00 | 1.00 | 1.00 |
| In-Process Volume [veh/h] | 0 | 0 | 0 | 0 | 0 | 0 | 0 | 0 | 0 | 0 | 0 | 0 |
| Site-Generated Trips [veh/h] | 0 | 0 | 0 | 0 | 0 | 0 | 0 | 0 | 0 | 0 | 0 | 0 |
| Diverted Trips [veh/h] | 0 | 0 | 0 | 0 | 0 | 0 | 0 | 0 | 0 | 0 | 0 | 0 |
| Pass-by Trips [veh/h] | 0 | 0 | 0 | 0 | 0 | 0 | 0 | 0 | 0 | 0 | 0 | 0 |
| Existing Site Adjustment Volume [veh/h] | 0 | 0 | 0 | 0 | 0 | 0 | 0 | 0 | 0 | 0 | 0 | 0 |
| Other Volume [veh/h] | 0 | 0 | 0 | 0 | 0 | 0 | 0 | 0 | 0 | 0 | 0 | 0 |
| Right-Turn on Red Volume [veh/h] | 0 | 0 | 0 | 0 | 0 | 0 | 0 | 0 | 0 | 0 | 0 | 0 |
| Total Hourly Volume [veh/h] | 55 | 664 | 38 | 94 | 875 | 39 | 18 | 110 | 29 | 52 | 112 | 54 |
| Peak Hour Factor | 0.8870 | 0.8870 | 0.8870 | 0.8870 | 0.8870 | 0.8870 | 0.8870 | 0.8870 | 0.8870 | 0.8870 | 0.8870 | 0.8870 |
| Other Adjustment Factor | 1.0000 | 1.0000 | 1.0000 | 1.0000 | 1.0000 | 1.0000 | 1.0000 | 1.0000 | 1.0000 | 1.0000 | 1.0000 | 1.0000 |
| Total 15-Minute Volume [veh/h] | 16 | 187 | 11 | 26 | 247 | 11 | 5 | 31 | 8 | 15 | 32 | 15 |
| Total Analysis Volume [veh/h] | 62 | 749 | 43 | 106 | 986 | 44 | 20 | 124 | 33 | 59 | 126 | 61 |
| Presence of On-Street Parking | No | | No | No | | No | No | | No | No | | No |
| On-Street Parking Maneuver Rate [/h] | 0 | 0 | 0 | 0 | 0 | 0 | 0 | 0 | 0 | 0 | 0 | 0 |
| Local Bus Stopping Rate [/h] | 0 | 0 | 0 | 0 | 0 | 0 | 0 | 0 | 0 | 0 | 0 | 0 |
| Pedestrian Volume [ped/h] | 0 | | | 0 | | | 0 | | | 0 | | |
| Bicycle Volume [bicycles/h] | 0 | | | 0 | | | 0 | | | 0 | | |

**Intersection Settings**

| | |
|---|---|
| Located in CBD | No |
| Signal Coordination Group | 2 - NS - Cedar |
| Cycle Length [s] | 120 |
| Coordination Type | Time of Day Pattern Coordinated |
| Actuation Type | Fully actuated |
| Offset [s] | 0.0 |
| Offset Reference | LagFO |
| Permissive Mode | SingleBand |
| Lost time [s] | 16.00 |

**Phasing & Timing**

| Control Type | Protecte | Permiss | Permiss | Protecte | Permiss | Permiss | Protecte | Permiss | Permiss | Protecte | Permiss | Permiss |
|---|---|---|---|---|---|---|---|---|---|---|---|---|
| Signal group | 5 | 2 | 0 | 1 | 6 | 0 | 3 | 8 | 0 | 7 | 4 | 0 |
| Auxiliary Signal Groups | | | | | | | | | | | | |
| Lead / Lag | Lead | - | - | Lead | - | - | Lead | - | - | Lead | - | - |
| Minimum Green [s] | 5 | 5 | 0 | 5 | 5 | 0 | 5 | 5 | 0 | 5 | 5 | 0 |
| Maximum Green [s] | 30 | 30 | 0 | 30 | 30 | 0 | 30 | 30 | 0 | 30 | 30 | 0 |
| Amber [s] | 4.4 | 4.4 | 0.0 | 4.4 | 4.4 | 0.0 | 3.7 | 3.7 | 0.0 | 4.4 | 4.4 | 0.0 |
| All red [s] | 1.0 | 1.0 | 0.0 | 1.0 | 1.0 | 0.0 | 1.0 | 1.0 | 0.0 | 1.0 | 1.0 | 0.0 |
| Split [s] | 11 | 53 | 0 | 15 | 57 | 0 | 10 | 41 | 0 | 11 | 42 | 0 |
| Vehicle Extension [s] | 3.0 | 3.0 | 0.0 | 3.0 | 3.0 | 0.0 | 3.0 | 3.0 | 0.0 | 3.0 | 3.0 | 0.0 |
| Walk [s] | 0 | 7 | 0 | 0 | 7 | 0 | 0 | 7 | 0 | 0 | 7 | 0 |
| Pedestrian Clearance [s] | 0 | 24 | 0 | 0 | 24 | 0 | 0 | 29 | 0 | 0 | 29 | 0 |
| I1, Start-Up Lost Time [s] | 2.0 | 2.0 | 0.0 | 2.0 | 2.0 | 0.0 | 2.0 | 2.0 | 0.0 | 2.0 | 2.0 | 0.0 |
| I2, Clearance Lost Time [s] | 3.4 | 3.4 | 0.0 | 3.4 | 3.4 | 0.0 | 2.7 | 2.7 | 0.0 | 3.4 | 3.4 | 0.0 |
| Minimum Recall | No | No | | No | No | | No | No | | No | No | |
| Maximum Recall | No | No | | No | No | | No | No | | No | No | |
| Pedestrian Recall | No | No | | No | No | | No | No | | No | No | |
| Detector Location [ft] | 0.0 | 0.0 | 0.0 | 0.0 | 0.0 | 0.0 | 0.0 | 0.0 | 0.0 | 0.0 | 0.0 | 0.0 |
| Detector Length [ft] | 0.0 | 0.0 | 0.0 | 0.0 | 0.0 | 0.0 | 0.0 | 0.0 | 0.0 | 0.0 | 0.0 | 0.0 |
| I, Upstream Filtering Factor | 1.00 | 1.00 | 1.00 | 1.00 | 1.00 | 1.00 | 1.00 | 1.00 | 1.00 | 1.00 | 1.00 | 1.00 |

**Exclusive Pedestrian Phase**

| | |
|---|---|
| Pedestrian Signal Group | 0 |
| Pedestrian Walk [s] | 0 |
| Pedestrian Clearance [s] | 0 |

**Lane Group Calculations**

| Lane Group | L | C | C | L | C | C | L | C | R | L | C | C |
|---|---|---|---|---|---|---|---|---|---|---|---|---|
| L, Total Lost Time per Cycle [s] | 5.40 | 5.40 | 5.40 | 5.40 | 5.40 | 5.40 | 4.70 | 4.70 | 4.70 | 5.40 | 5.40 | 5.40 |
| l1_p, Permitted Start-Up Lost Time [s] | 0.00 | 0.00 | 0.00 | 0.00 | 0.00 | 0.00 | 0.00 | 0.00 | 0.00 | 0.00 | 0.00 | 0.00 |
| l2, Clearance Lost Time [s] | 3.40 | 3.40 | 3.40 | 3.40 | 3.40 | 3.40 | 2.70 | 2.70 | 2.70 | 3.40 | 3.40 | 3.40 |
| g_i, Effective Green Time [s] | 5 | 75 | 75 | 9 | 78 | 78 | 2 | 10 | 10 | 5 | 13 | 13 |
| g / C, Green / Cycle | 0.05 | 0.62 | 0.62 | 0.07 | 0.65 | 0.65 | 0.02 | 0.08 | 0.08 | 0.04 | 0.11 | 0.11 |
| (v / s)_i Volume / Saturation Flow Rate | 0.04 | 0.22 | 0.22 | 0.06 | 0.28 | 0.28 | 0.01 | 0.07 | 0.02 | 0.03 | 0.05 | 0.05 |
| s, saturation flow rate [veh/h] | 1740 | 1827 | 1792 | 1740 | 1827 | 1800 | 1774 | 1863 | 1583 | 1774 | 1863 | 1666 |
| c, Capacity [veh/h] | 80 | 1138 | 1116 | 130 | 1191 | 1173 | 38 | 158 | 134 | 77 | 199 | 178 |
| d1, Uniform Delay [s] | 55.74 | 4.37 | 4.37 | 53.23 | 3.21 | 3.21 | 58.18 | 53.88 | 51.36 | 56.82 | 50.47 | 50.65 |
| k, delay calibration | 0.11 | 0.50 | 0.50 | 0.16 | 0.50 | 0.50 | 0.11 | 0.11 | 0.11 | 0.11 | 0.11 | 0.11 |
| I, Upstream Filtering Factor | 1.00 | 1.00 | 1.00 | 1.00 | 1.00 | 1.00 | 1.00 | 1.00 | 1.00 | 1.00 | 1.00 | 1.00 |
| d2, Incremental Delay [s] | 14.59 | 0.85 | 0.87 | 15.99 | 1.16 | 1.18 | 11.12 | 8.29 | 0.94 | 14.44 | 1.79 | 2.26 |
| d3, Initial Queue Delay [s] | 0.00 | 0.00 | 0.00 | 0.00 | 0.00 | 0.00 | 0.00 | 0.00 | 0.00 | 0.00 | 0.00 | 0.00 |
| Rp, platoon ratio | 1.33 | 1.33 | 1.33 | 1.33 | 1.33 | 1.33 | 1.00 | 1.00 | 1.00 | 1.00 | 1.00 | 1.00 |
| PF, progression factor | 1.00 | 1.00 | 1.00 | 1.00 | 1.00 | 1.00 | 1.00 | 1.00 | 1.00 | 1.00 | 1.00 | 1.00 |

**Lane Group Results**

| | | | | | | | | | | | | |
|---|---|---|---|---|---|---|---|---|---|---|---|---|
| X, volume / capacity | 0.77 | 0.35 | 0.35 | 0.81 | 0.44 | 0.44 | 0.53 | 0.79 | 0.25 | 0.76 | 0.48 | 0.51 |
| d, Delay for Lane Group [s/veh] | 70.34 | 5.22 | 5.24 | 69.23 | 4.37 | 4.39 | 69.29 | 62.17 | 52.30 | 71.27 | 52.27 | 52.90 |
| Lane Group LOS | E | A | A | E | A | A | E | E | D | E | D | D |
| Critical Lane Group | Yes | No | No | No | No | Yes | No | Yes | No | Yes | No | No |
| 50th-Percentile Queue Length [veh] | 2.13 | 2.09 | 2.06 | 3.60 | 2.17 | 2.15 | 0.72 | 4.04 | 0.97 | 2.05 | 2.77 | 2.66 |
| 50th-Percentile Queue Length [ft] | 53.14 | 52.37 | 51.52 | 89.91 | 54.29 | 53.64 | 17.96 | 100.90 | 24.17 | 51.33 | 69.31 | 66.52 |
| 95th-Percentile Queue Length [veh] | 3.83 | 3.77 | 3.71 | 6.47 | 3.91 | 3.86 | 1.29 | 7.26 | 1.74 | 3.70 | 4.99 | 4.79 |
| 95th-Percentile Queue Length [ft] | 95.65 | 94.26 | 92.73 | 161.84 | 97.71 | 96.56 | 32.33 | 181.62 | 43.50 | 92.39 | 124.76 | 119.74 |

**Movement, Approach, & Intersection Results**

| | | | | | | | | | | | | |
|---|---|---|---|---|---|---|---|---|---|---|---|---|
| d_M, Delay for Movement [s/veh] | 70.34 | 5.23 | 5.24 | 69.23 | 4.38 | 4.39 | 69.29 | 62.17 | 52.30 | 71.27 | 52.42 | 52.90 |
| Movement LOS | E | A | A | E | A | A | E | E | D | E | D | D |
| d_A, Approach Delay [s/veh] | 9.96 | | | 10.43 | | | 61.14 | | | 57.06 | | |
| Approach LOS | A | | | B | | | E | | | E | | |
| d_I, Intersection Delay [s/veh] | 18.74 | | | | | | | | | | | |
| Intersection LOS | B | | | | | | | | | | | |
| Intersection V/C | 0.484 | | | | | | | | | | | |

## Sequence

| | | | | | | | | | | | | | | | | |
|---|---|---|---|---|---|---|---|---|---|---|---|---|---|---|---|---|
| Ring 1 | 1 | 2 | 3 | 4 | - | - | - | - | - | - | - | - | - | - | - | - |
| Ring 2 | 5 | 6 | 7 | 8 | - | - | - | - | - | - | - | - | - | - | - | - |
| Ring 3 | - | - | - | - | - | - | - | - | - | - | - | - | - | - | - | - |
| Ring 4 | - | - | - | - | - | - | - | - | - | - | - | - | - | - | - | - |

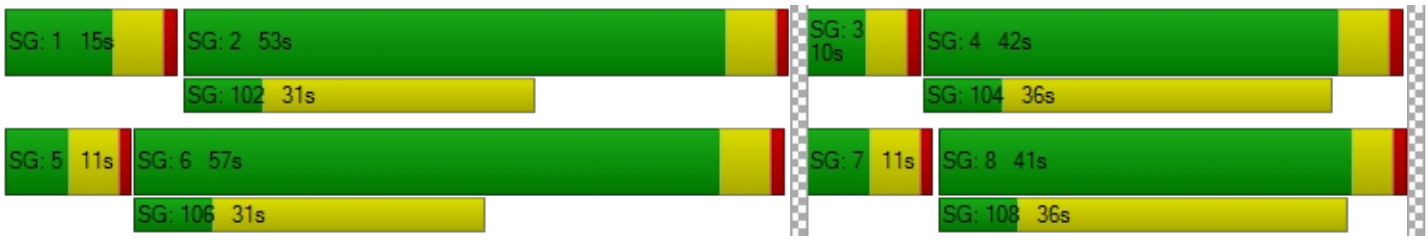

**Intersection Level Of Service Report**
**Intersection 12: Cedar Ave (NS) / Bloomington Ave (EW)**

| | | | |
|---|---|---|---|
| Control Type: | Signalized | Delay (sec / veh): | 12.4 |
| Analysis Method: | HCM 2010 | Level Of Service: | B |
| Analysis Period: | 15 minutes | Volume to Capacity (v/c): | 0.448 |

**Intersection Setup**

| Name | Cedar Avenue | | Cedar Avenue | | Bloomington Avenue | |
|---|---|---|---|---|---|---|
| Approach | Northbound | | Southbound | | Westbound | |
| Lane Configuration | | | | | | |
| Turning Movement | Thru | Right | Left | Thru | Left | Right |
| Lane Width [ft] | 12.00 | 12.00 | 12.00 | 12.00 | 12.00 | 12.00 |
| No. of Lanes in Pocket | 0 | 0 | 1 | 0 | 0 | 1 |
| Pocket Length [ft] | 100.00 | 100.00 | 100.00 | 100.00 | 100.00 | 125.00 |
| Speed [mph] | 40.00 | | 40.00 | | 45.00 | |
| Grade [%] | 0.00 | | 0.00 | | 0.00 | |
| Crosswalk | No | | Yes | | No | |

**volumes**

| Name | Cedar Avenue | | Cedar Avenue | | Bloomington Avenue | |
|---|---|---|---|---|---|---|
| Base Volume Input [veh/h] | 724 | 282 | 68 | 1006 | 315 | 56 |
| Base Volume Adjustment Factor | 1.0000 | 0.0000 | 1.0000 | 1.0000 | 1.0000 | 1.0000 |
| Heavy Vehicles Percentage [%] | 4.00 | 4.00 | 4.00 | 4.00 | 4.00 | 4.00 |
| Growth Rate | 1.00 | 1.00 | 1.00 | 1.00 | 1.00 | 1.00 |
| In-Process Volume [veh/h] | 0 | 0 | 0 | 0 | 0 | 0 |
| Site-Generated Trips [veh/h] | 0 | 0 | 0 | 0 | 0 | 0 |
| Diverted Trips [veh/h] | 0 | 0 | 0 | 0 | 0 | 0 |
| Pass-by Trips [veh/h] | 0 | 0 | 0 | 0 | 0 | 0 |
| Existing Site Adjustment Volume [veh/h] | 0 | 0 | 0 | 0 | 0 | 0 |
| Other Volume [veh/h] | 0 | 0 | 0 | 0 | 0 | 0 |
| Right-Turn on Red Volume [veh/h] | 0 | 0 | 0 | 0 | 0 | 0 |
| Total Hourly Volume [veh/h] | 724 | 0 | 68 | 1006 | 315 | 56 |
| Peak Hour Factor | 0.9480 | 0.9480 | 0.9480 | 0.9480 | 0.9480 | 0.9480 |
| Other Adjustment Factor | 1.0000 | 1.0000 | 1.0000 | 1.0000 | 1.0000 | 1.0000 |
| Total 15-Minute Volume [veh/h] | 191 | 0 | 18 | 265 | 83 | 15 |
| Total Analysis Volume [veh/h] | 764 | 0 | 72 | 1061 | 332 | 59 |
| Presence of On-Street Parking | No | No | No | No | No | No |
| On-Street Parking Maneuver Rate [/h] | 0 | 0 | 0 | 0 | 0 | 0 |
| Local Bus Stopping Rate [/h] | 0 | 0 | 0 | 0 | 0 | 0 |
| Pedestrian Volume [ped/h] | 0 | | 0 | | 0 | |
| Bicycle Volume [bicycles/h] | 0 | | 0 | | 0 | |

**Intersection Settings**

| | |
|---|---|
| Located in CBD | No |
| Signal Coordination Group | 2 - NS - Cedar |
| Cycle Length [s] | 120 |
| Coordination Type | Time of Day Pattern Coordinated |
| Actuation Type | Fully actuated |
| Offset [s] | 71.0 |
| Offset Reference | LagFO |
| Permissive Mode | SingleBand |
| Lost time [s] | 12.00 |

**Phasing & Timing**

| Control Type | Permissive | Permissive | Protected | Permissive | Split | Split |
|---|---|---|---|---|---|---|
| Signal group | 2 | 0 | 1 | 6 | 7 | 0 |
| Auxiliary Signal Groups | | | | | | |
| Lead / Lag | - | - | Lead | - | Lead | - |
| Minimum Green [s] | 5 | 0 | 5 | 5 | 5 | 0 |
| Maximum Green [s] | 30 | 0 | 30 | 30 | 30 | 0 |
| Amber [s] | 4.4 | 0.0 | 4.4 | 4.4 | 4.8 | 0.0 |
| All red [s] | 1.0 | 0.0 | 1.0 | 1.0 | 1.0 | 0.0 |
| Split [s] | 63 | 0 | 21 | 84 | 36 | 0 |
| Vehicle Extension [s] | 3.0 | 0.0 | 3.0 | 3.0 | 3.0 | 0.0 |
| Walk [s] | 7 | 0 | 0 | 7 | 7 | 0 |
| Pedestrian Clearance [s] | 10 | 0 | 0 | 10 | 23 | 0 |
| I1, Start-Up Lost Time [s] | 2.0 | 0.0 | 2.0 | 2.0 | 2.0 | 0.0 |
| I2, Clearance Lost Time [s] | 3.4 | 0.0 | 3.4 | 3.4 | 3.8 | 0.0 |
| Minimum Recall | No | | No | No | No | |
| Maximum Recall | No | | No | No | No | |
| Pedestrian Recall | No | | No | No | No | |
| Detector Location [ft] | 0.0 | 0.0 | 0.0 | 0.0 | 0.0 | 0.0 |
| Detector Length [ft] | 0.0 | 0.0 | 0.0 | 0.0 | 0.0 | 0.0 |
| I, Upstream Filtering Factor | 1.00 | 1.00 | 1.00 | 1.00 | 1.00 | 1.00 |

**Exclusive Pedestrian Phase**

| | |
|---|---|
| Pedestrian Signal Group | 0 |
| Pedestrian Walk [s] | 0 |
| Pedestrian Clearance [s] | 0 |

**Lane Group Calculations**

| Lane Group | C | C | R | L | C | L | R |
|---|---|---|---|---|---|---|---|
| L, Total Lost Time per Cycle [s] | 5.40 | 5.40 | 5.40 | 5.40 | 5.40 | 5.80 | 5.80 |
| l1_p, Permitted Start-Up Lost Time [s] | 0.00 | 0.00 | 0.00 | 0.00 | 0.00 | 0.00 | 0.00 |
| l2, Clearance Lost Time [s] | 3.40 | 3.40 | 3.40 | 3.40 | 3.40 | 3.80 | 3.80 |
| g_i, Effective Green Time [s] | 83 | 83 | 83 | 6 | 94 | 14 | 14 |
| g / C, Green / Cycle | 0.69 | 0.69 | 0.69 | 0.05 | 0.79 | 0.12 | 0.12 |
| (v / s)_i Volume / Saturation Flow Rate | 0.21 | 0.21 | 0.00 | 0.04 | 0.31 | 0.10 | 0.04 |
| s, saturation flow rate [veh/h] | 1827 | 1827 | 1553 | 1740 | 3478 | 3379 | 1553 |
| c, Capacity [veh/h] | 1257 | 1257 | 1068 | 92 | 2734 | 408 | 188 |
| d1, Uniform Delay [s] | 1.67 | 1.67 | 0.00 | 55.04 | 0.00 | 51.42 | 48.20 |
| k, delay calibration | 0.50 | 0.50 | 0.50 | 0.11 | 0.50 | 0.11 | 0.11 |
| I, Upstream Filtering Factor | 1.00 | 1.00 | 1.00 | 1.00 | 1.00 | 1.00 | 1.00 |
| d2, Incremental Delay [s] | 0.62 | 0.62 | 0.00 | 13.17 | 0.42 | 3.98 | 0.95 |
| d3, Initial Queue Delay [s] | 0.00 | 0.00 | 0.00 | 0.00 | 0.00 | 0.00 | 0.00 |
| Rp, platoon ratio | 1.33 | 1.33 | 1.33 | 1.33 | 1.33 | 1.00 | 1.00 |
| PF, progression factor | 1.00 | 1.00 | 1.00 | 1.00 | 1.00 | 1.00 | 1.00 |

**Lane Group Results**

| | | | | | | | |
|---|---|---|---|---|---|---|---|
| X, volume / capacity | 0.30 | 0.30 | 0.00 | 0.78 | 0.39 | 0.81 | 0.31 |
| d, Delay for Lane Group [s/veh] | 2.30 | 2.30 | 0.00 | 68.21 | 0.42 | 55.39 | 49.15 |
| Lane Group LOS | A | A | A | E | A | E | D |
| Critical Lane Group | No | No | No | No | Yes | Yes | No |
| 50th-Percentile Queue Length [veh] | 0.97 | 0.97 | 0.00 | 2.42 | 0.16 | 4.96 | 1.63 |
| 50th-Percentile Queue Length [ft] | 24.33 | 24.33 | 0.00 | 60.42 | 3.96 | 124.08 | 40.70 |
| 95th-Percentile Queue Length [veh] | 1.75 | 1.75 | 0.00 | 4.35 | 0.29 | 8.62 | 2.93 |
| 95th-Percentile Queue Length [ft] | 43.80 | 43.80 | 0.00 | 108.75 | 7.13 | 215.43 | 73.26 |

**Movement, Approach, & Intersection Results**

| | | | | | | |
|---|---|---|---|---|---|---|
| d_M, Delay for Movement [s/veh] | 2.30 | 1.15 | 68.21 | 0.42 | 55.39 | 49.15 |
| Movement LOS | A | A | E | A | E | D |
| d_A, Approach Delay [s/veh] | 2.30 | | 4.73 | | 54.45 | |
| Approach LOS | A | | A | | D | |
| d_I, Intersection Delay [s/veh] | 12.41 | | | | | |
| Intersection LOS | B | | | | | |
| Intersection V/C | 0.448 | | | | | |

## Sequence

| | | | | | | | | | | | | | | | | |
|---|---|---|---|---|---|---|---|---|---|---|---|---|---|---|---|---|
| Ring 1 | 1 | 2 | - | - | - | - | - | - | - | - | - | - | - | - | - | - |
| Ring 2 | - | 6 | 7 | - | - | - | - | - | - | - | - | - | - | - | - | - |
| Ring 3 | - | - | - | - | - | - | - | - | - | - | - | - | - | - | - | - |
| Ring 4 | - | - | - | - | - | - | - | - | - | - | - | - | - | - | - | - |

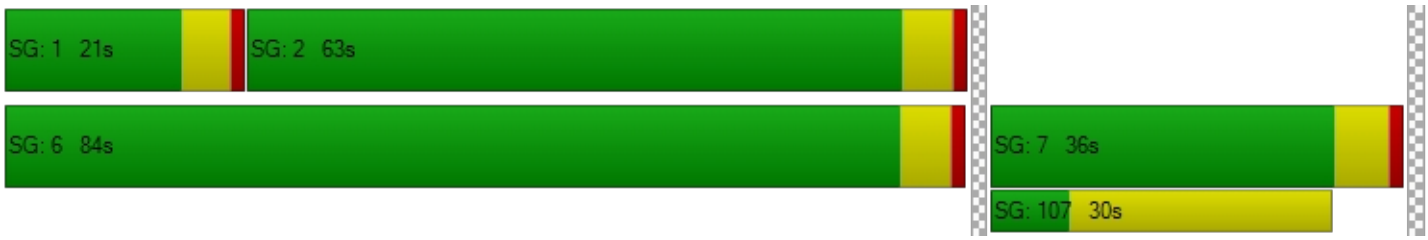

**Intersection Level Of Service Report**
**Intersection 13: Cedar Ave (NS) / Valley Blvd (EW)**

| | | | |
|---|---|---|---|
| Control Type: | Signalized | Delay (sec / veh): | 27.3 |
| Analysis Method: | HCM 2010 | Level Of Service: | C |
| Analysis Period: | 15 minutes | Volume to Capacity (v/c): | 0.689 |

**Intersection Setup**

| Name | Cedar Avenue | | | Cedar Avenue | | | | | | Valley Boulevard | | |
|---|---|---|---|---|---|---|---|---|---|---|---|---|
| Approach | Northbound | | | Southbound | | | Eastbound | | | Westbound | | |
| Lane Configuration | | | | | | | | | | | | |
| Turning Movement | Left | Thru | Right | Left | Thru | Right | Left | Thru | Right | Left | Thru | Right |
| Lane Width [ft] | 12.00 | 12.00 | 12.00 | 12.00 | 12.00 | 12.00 | 12.00 | 12.00 | 12.00 | 12.00 | 12.00 | 12.00 |
| No. of Lanes in Pocket | 2 | 0 | 1 | 2 | 0 | 0 | 2 | 0 | 1 | 2 | 0 | 0 |
| Pocket Length [ft] | 235.00 | 100.00 | 100.00 | 155.00 | 100.00 | 100.00 | 300.00 | 100.00 | 300.00 | 375.00 | 100.00 | 100.00 |
| Speed [mph] | 40.00 | | | 40.00 | | | 30.00 | | | 40.00 | | |
| Grade [%] | 0.00 | | | 0.00 | | | 0.00 | | | 0.00 | | |
| Crosswalk | Yes | | | Yes | | | Yes | | | Yes | | |

**volumes**

| Name | Cedar Avenue | | | Cedar Avenue | | | | | | Valley Boulevard | | |
|---|---|---|---|---|---|---|---|---|---|---|---|---|
| Base Volume Input [veh/h] | 313 | 986 | 211 | 58 | 1196 | 40 | 35 | 154 | 498 | 351 | 186 | 43 |
| Base Volume Adjustment Factor | 1.0000 | 1.0000 | 1.0000 | 1.0000 | 1.0000 | 1.0000 | 1.0000 | 1.0000 | 1.0000 | 1.0000 | 1.0000 | 1.0000 |
| Heavy Vehicles Percentage [%] | 5.00 | 5.00 | 5.00 | 4.00 | 4.00 | 4.00 | 4.00 | 4.00 | 4.00 | 4.00 | 4.00 | 4.00 |
| Growth Rate | 1.00 | 1.00 | 1.00 | 1.00 | 1.00 | 1.00 | 1.00 | 1.00 | 1.00 | 1.00 | 1.00 | 1.00 |
| In-Process Volume [veh/h] | 0 | 0 | 0 | 0 | 0 | 0 | 0 | 0 | 0 | 0 | 0 | 0 |
| Site-Generated Trips [veh/h] | 0 | 0 | 0 | 0 | 0 | 0 | 0 | 0 | 0 | 0 | 0 | 0 |
| Diverted Trips [veh/h] | 0 | 0 | 0 | 0 | 0 | 0 | 0 | 0 | 0 | 0 | 0 | 0 |
| Pass-by Trips [veh/h] | 0 | 0 | 0 | 0 | 0 | 0 | 0 | 0 | 0 | 0 | 0 | 0 |
| Existing Site Adjustment Volume [veh/h] | 0 | 0 | 0 | 0 | 0 | 0 | 0 | 0 | 0 | 0 | 0 | 0 |
| Other Volume [veh/h] | 0 | 0 | 0 | 0 | 0 | 0 | 0 | 0 | 0 | 0 | 0 | 0 |
| Right-Turn on Red Volume [veh/h] | 0 | 0 | 0 | 0 | 0 | 0 | 0 | 0 | 0 | 0 | 0 | 0 |
| Total Hourly Volume [veh/h] | 313 | 986 | 211 | 58 | 1196 | 40 | 35 | 154 | 498 | 351 | 186 | 43 |
| Peak Hour Factor | 0.9760 | 0.9760 | 0.9760 | 0.9760 | 0.9760 | 0.9760 | 0.9760 | 0.9760 | 0.9760 | 0.9760 | 0.9760 | 0.9760 |
| Other Adjustment Factor | 1.0000 | 1.0000 | 1.0000 | 1.0000 | 1.0000 | 1.0000 | 1.0000 | 1.0000 | 1.0000 | 1.0000 | 1.0000 | 1.0000 |
| Total 15-Minute Volume [veh/h] | 80 | 253 | 54 | 15 | 306 | 10 | 9 | 39 | 128 | 90 | 48 | 11 |
| Total Analysis Volume [veh/h] | 321 | 1010 | 216 | 59 | 1225 | 41 | 36 | 158 | 510 | 360 | 191 | 44 |
| Presence of On-Street Parking | No | | No | No | | No | No | | No | No | | No |
| On-Street Parking Maneuver Rate [/h] | 0 | 0 | 0 | 0 | 0 | 0 | 0 | 0 | 0 | 0 | 0 | 0 |
| Local Bus Stopping Rate [/h] | 0 | 0 | 0 | 0 | 0 | 0 | 0 | 0 | 0 | 0 | 0 | 0 |
| Pedestrian Volume [ped/h] | 0 | | | 0 | | | 0 | | | 0 | | |
| Bicycle Volume [bicycles/h] | 0 | | | 0 | | | 0 | | | 0 | | |

**Intersection Settings**

| | |
|---|---|
| Located in CBD | No |
| Signal Coordination Group | 2 - NS - Cedar |
| Cycle Length [s] | 120 |
| Coordination Type | Time of Day Pattern Coordinated |
| Actuation Type | Fully actuated |
| Offset [s] | 62.0 |
| Offset Reference | LagFO |
| Permissive Mode | SingleBand |
| Lost time [s] | 16.00 |

**Phasing & Timing**

| Control Type | Protecte | Permiss | Overlap | Protecte | Permiss | Permiss | Protecte | Permiss | Overlap | Protecte | Permiss | Permiss |
|---|---|---|---|---|---|---|---|---|---|---|---|---|
| Signal group | 5 | 2 | 2 | 1 | 6 | 0 | 3 | 8 | 8 | 7 | 4 | 0 |
| Auxiliary Signal Groups | | | 2 | | | | | | 5,8 | | | |
| Lead / Lag | Lead | - | - | Lead | - | - | Lead | - | - | Lead | - | - |
| Minimum Green [s] | 5 | 5 | 5 | 5 | 5 | 0 | 5 | 5 | 5 | 5 | 5 | 0 |
| Maximum Green [s] | 30 | 30 | 30 | 30 | 30 | 0 | 30 | 30 | 30 | 30 | 30 | 0 |
| Amber [s] | 4.4 | 4.4 | 4.4 | 4.4 | 4.4 | 0.0 | 3.7 | 3.7 | 3.7 | 4.4 | 4.4 | 0.0 |
| All red [s] | 1.0 | 1.0 | 1.0 | 1.0 | 1.0 | 0.0 | 1.0 | 1.0 | 1.0 | 1.0 | 1.0 | 0.0 |
| Split [s] | 18 | 49 | 49 | 11 | 42 | 0 | 10 | 41 | 41 | 19 | 50 | 0 |
| Vehicle Extension [s] | 3.0 | 3.0 | 3.0 | 3.0 | 3.0 | 0.0 | 3.0 | 3.0 | 3.0 | 3.0 | 3.0 | 0.0 |
| Walk [s] | 0 | 7 | 7 | 0 | 7 | 0 | 0 | 7 | 7 | 0 | 7 | 0 |
| Pedestrian Clearance [s] | 0 | 28 | 28 | 0 | 27 | 0 | 0 | 29 | 29 | 0 | 28 | 0 |
| I1, Start-Up Lost Time [s] | 2.0 | 2.0 | 2.0 | 2.0 | 2.0 | 0.0 | 2.0 | 2.0 | 2.0 | 2.0 | 2.0 | 0.0 |
| I2, Clearance Lost Time [s] | 3.4 | 3.4 | 3.4 | 3.4 | 3.4 | 0.0 | 2.7 | 2.7 | 2.7 | 3.4 | 3.4 | 0.0 |
| Minimum Recall | No | No | No | No | No | | No | No | No | No | No | |
| Maximum Recall | No | No | No | No | No | | No | No | No | No | No | |
| Pedestrian Recall | No | No | No | No | No | | No | No | No | No | No | |
| Detector Location [ft] | 0.0 | 0.0 | 0.0 | 0.0 | 0.0 | 0.0 | 0.0 | 0.0 | 0.0 | 0.0 | 0.0 | 0.0 |
| Detector Length [ft] | 0.0 | 0.0 | 0.0 | 0.0 | 0.0 | 0.0 | 0.0 | 0.0 | 0.0 | 0.0 | 0.0 | 0.0 |
| I, Upstream Filtering Factor | 1.00 | 1.00 | 1.00 | 1.00 | 1.00 | 1.00 | 1.00 | 1.00 | 1.00 | 1.00 | 1.00 | 1.00 |

**Exclusive Pedestrian Phase**

| | |
|---|---|
| Pedestrian Signal Group | 0 |
| Pedestrian Walk [s] | 0 |
| Pedestrian Clearance [s] | 0 |

**Lane Group Calculations**

| Lane Group | L | C | R | L | C | C | L | C | R | L | C | C |
|---|---|---|---|---|---|---|---|---|---|---|---|---|
| L, Total Lost Time per Cycle [s] | 5.40 | 5.40 | 5.40 | 5.40 | 5.40 | 5.40 | 4.70 | 4.70 | 5.40 | 5.40 | 5.40 | 5.40 |
| l1_p, Permitted Start-Up Lost Time [s] | 0.00 | 0.00 | 0.00 | 0.00 | 0.00 | 0.00 | 0.00 | 0.00 | 0.00 | 0.00 | 0.00 | 0.00 |
| l2, Clearance Lost Time [s] | 3.40 | 3.40 | 3.40 | 3.40 | 3.40 | 3.40 | 2.70 | 2.70 | 0.00 | 3.40 | 3.40 | 3.40 |
| g_i, Effective Green Time [s] | 13 | 67 | 67 | 4 | 59 | 59 | 4 | 14 | 31 | 14 | 24 | 24 |
| g / C, Green / Cycle | 0.11 | 0.56 | 0.56 | 0.04 | 0.49 | 0.49 | 0.03 | 0.11 | 0.26 | 0.11 | 0.20 | 0.20 |
| (v / s)_i Volume / Saturation Flow Rate | 0.10 | 0.29 | 0.14 | 0.02 | 0.24 | 0.24 | 0.01 | 0.09 | 0.19 | 0.11 | 0.07 | 0.07 |
| s, saturation flow rate [veh/h] | 3347 | 3445 | 1538 | 3379 | 3478 | 1797 | 3379 | 1827 | 2749 | 3379 | 1827 | 1711 |
| c, Capacity [veh/h] | 353 | 1931 | 862 | 124 | 1710 | 883 | 101 | 210 | 714 | 384 | 363 | 340 |
| d1, Uniform Delay [s] | 51.03 | 8.52 | 7.34 | 55.98 | 13.04 | 13.04 | 56.50 | 49.18 | 35.37 | 50.50 | 37.69 | 37.72 |
| k, delay calibration | 0.11 | 0.50 | 0.50 | 0.11 | 0.50 | 0.50 | 0.11 | 0.11 | 0.26 | 0.11 | 0.11 | 0.11 |
| I, Upstream Filtering Factor | 1.00 | 1.00 | 1.00 | 1.00 | 1.00 | 1.00 | 1.00 | 1.00 | 1.00 | 1.00 | 1.00 | 1.00 |
| d2, Incremental Delay [s] | 9.03 | 1.02 | 0.70 | 2.81 | 1.00 | 1.93 | 2.09 | 5.33 | 3.22 | 10.80 | 0.53 | 0.58 |
| d3, Initial Queue Delay [s] | 0.00 | 0.00 | 0.00 | 0.00 | 0.00 | 0.00 | 0.00 | 0.00 | 0.00 | 0.00 | 0.00 | 0.00 |
| Rp, platoon ratio | 1.33 | 1.33 | 1.33 | 1.33 | 1.33 | 1.33 | 1.33 | 1.33 | 1.33 | 1.33 | 1.33 | 1.33 |
| PF, progression factor | 1.00 | 1.00 | 1.00 | 1.00 | 1.00 | 1.00 | 1.00 | 1.00 | 1.00 | 1.00 | 1.00 | 1.00 |

**Lane Group Results**

| | | | | | | | | | | | | |
|---|---|---|---|---|---|---|---|---|---|---|---|---|
| X, volume / capacity | 0.91 | 0.52 | 0.25 | 0.48 | 0.49 | 0.49 | 0.35 | 0.75 | 0.71 | 0.94 | 0.33 | 0.34 |
| d, Delay for Lane Group [s/veh] | 60.06 | 9.54 | 8.04 | 58.79 | 14.04 | 14.97 | 58.60 | 54.50 | 38.60 | 61.30 | 38.23 | 38.30 |
| Lane Group LOS | E | A | A | E | B | B | E | D | D | E | D | D |
| Critical Lane Group | Yes | No | No | No | No | Yes | No | No | Yes | Yes | No | No |
| 50th-Percentile Queue Length [veh] | 4.94 | 4.21 | 1.69 | 0.90 | 4.82 | 5.21 | 0.56 | 4.70 | 6.41 | 5.61 | 2.81 | 2.66 |
| 50th-Percentile Queue Length [ft] | 123.59 | 105.20 | 42.24 | 22.55 | 120.60 | 130.31 | 14.01 | 117.49 | 160.20 | 140.20 | 70.27 | 66.57 |
| 95th-Percentile Queue Length [veh] | 8.59 | 7.57 | 3.04 | 1.62 | 8.43 | 8.96 | 1.01 | 8.25 | 10.56 | 9.49 | 5.06 | 4.79 |
| 95th-Percentile Queue Length [ft] | 214.76 | 189.31 | 76.03 | 40.59 | 210.65 | 223.91 | 25.21 | 206.37 | 263.99 | 237.29 | 126.49 | 119.82 |

**Movement, Approach, & Intersection Results**

| | | | | | | | | | | | | |
|---|---|---|---|---|---|---|---|---|---|---|---|---|
| d_M, Delay for Movement [s/veh] | 60.06 | 9.54 | 8.04 | 58.79 | 14.33 | 14.97 | 58.60 | 54.50 | 38.60 | 61.30 | 38.25 | 38.30 |
| Movement LOS | E | A | A | E | B | B | E | D | D | E | D | D |
| d_A, Approach Delay [s/veh] | 19.81 | | | 16.33 | | | 43.19 | | | 52.20 | | |
| Approach LOS | B | | | B | | | D | | | D | | |
| d_I, Intersection Delay [s/veh] | 27.27 | | | | | | | | | | | |
| Intersection LOS | C | | | | | | | | | | | |
| Intersection V/C | 0.689 | | | | | | | | | | | |

## Sequence

| | | | | | | | | | | | | | | | | |
|---|---|---|---|---|---|---|---|---|---|---|---|---|---|---|---|---|
| Ring 1 | 1 | 2 | 3 | 4 | - | - | - | - | - | - | - | - | - | - | - | - |
| Ring 2 | 5 | 6 | 7 | 8 | - | - | - | - | - | - | - | - | - | - | - | - |
| Ring 3 | - | - | - | - | - | - | - | - | - | - | - | - | - | - | - | - |
| Ring 4 | - | - | - | - | - | - | - | - | - | - | - | - | - | - | - | - |

**Intersection Level Of Service Report**
**Intersection 14: Cedar Ave (NS) / I-10 Westbound Ramps (EW)**

| | | | |
|---|---|---|---|
| Control Type: | Signalized | Delay (sec / veh): | 67.0 |
| Analysis Method: | HCM 2010 | Level Of Service: | E |
| Analysis Period: | 15 minutes | Volume to Capacity (v/c): | 1.127 |

**Intersection Setup**

| Name | Cedar Avenue | | | Cedar Avenue | | | | | | I-10 Westbound Ramps | | |
|---|---|---|---|---|---|---|---|---|---|---|---|---|
| Approach | Northbound | | | Southbound | | | Eastbound | | | Westbound | | |
| Lane Configuration | | | | | | | | | | | | |
| Turning Movement | Left | Thru | Right | Left | Thru | Right | Left | Thru | Right | Left | Thru | Right |
| Lane Width [ft] | 12.00 | 12.00 | 12.00 | 12.00 | 12.00 | 12.00 | 12.00 | 12.00 | 12.00 | 12.00 | 12.00 | 12.00 |
| No. of Lanes in Pocket | 1 | 0 | 0 | 0 | 0 | 1 | 0 | 0 | 0 | 0 | 0 | 1 |
| Pocket Length [ft] | 305.00 | 100.00 | 100.00 | 100.00 | 100.00 | 100.00 | 100.00 | 100.00 | 100.00 | 100.00 | 100.00 | 485.00 |
| Speed [mph] | 40.00 | | | 40.00 | | | 30.00 | | | 30.00 | | |
| Grade [%] | 0.00 | | | 0.00 | | | 0.00 | | | 0.00 | | |
| Crosswalk | No | | | No | | | Yes | | | Yes | | |

**volumes**

| Name | Cedar Avenue | | | Cedar Avenue | | | | | | I-10 Westbound Ramps | | |
|---|---|---|---|---|---|---|---|---|---|---|---|---|
| Base Volume Input [veh/h] | 293 | 1096 | 0 | 0 | 1147 | 889 | 0 | 0 | 0 | 239 | 1 | 394 |
| Base Volume Adjustment Factor | 1.0000 | 1.0000 | 1.0000 | 1.0000 | 1.0000 | 1.0000 | 1.0000 | 1.0000 | 1.0000 | 1.0000 | 1.0000 | 1.0000 |
| Heavy Vehicles Percentage [%] | 5.00 | 5.00 | 2.00 | 2.00 | 5.00 | 5.00 | 2.00 | 2.00 | 2.00 | 6.00 | 6.00 | 6.00 |
| Growth Rate | 1.00 | 1.00 | 1.00 | 1.00 | 1.00 | 1.00 | 1.00 | 1.00 | 1.00 | 1.00 | 1.00 | 1.00 |
| In-Process Volume [veh/h] | 0 | 0 | 0 | 0 | 0 | 0 | 0 | 0 | 0 | 0 | 0 | 0 |
| Site-Generated Trips [veh/h] | 0 | 0 | 0 | 0 | 0 | 0 | 0 | 0 | 0 | 0 | 0 | 0 |
| Diverted Trips [veh/h] | 0 | 0 | 0 | 0 | 0 | 0 | 0 | 0 | 0 | 0 | 0 | 0 |
| Pass-by Trips [veh/h] | 0 | 0 | 0 | 0 | 0 | 0 | 0 | 0 | 0 | 0 | 0 | 0 |
| Existing Site Adjustment Volume [veh/h] | 0 | 0 | 0 | 0 | 0 | 0 | 0 | 0 | 0 | 0 | 0 | 0 |
| Other Volume [veh/h] | 0 | 0 | 0 | 0 | 0 | 0 | 0 | 0 | 0 | 0 | 0 | 0 |
| Right-Turn on Red Volume [veh/h] | 0 | 0 | 0 | 0 | 0 | 0 | 0 | 0 | 0 | 0 | 0 | 0 |
| Total Hourly Volume [veh/h] | 293 | 1096 | 0 | 0 | 1147 | 889 | 0 | 0 | 0 | 239 | 1 | 394 |
| Peak Hour Factor | 0.9350 | 0.9350 | 1.0000 | 1.0000 | 0.9350 | 0.9350 | 1.0000 | 1.0000 | 1.0000 | 0.9350 | 0.9350 | 0.9350 |
| Other Adjustment Factor | 1.0000 | 1.0000 | 1.0000 | 1.0000 | 1.0000 | 1.0000 | 1.0000 | 1.0000 | 1.0000 | 1.0000 | 1.0000 | 1.0000 |
| Total 15-Minute Volume [veh/h] | 78 | 293 | 0 | 0 | 307 | 238 | 0 | 0 | 0 | 64 | 0 | 105 |
| Total Analysis Volume [veh/h] | 313 | 1172 | 0 | 0 | 1227 | 951 | 0 | 0 | 0 | 256 | 1 | 421 |
| Presence of On-Street Parking | No | | No | No | | No | | | | No | | No |
| On-Street Parking Maneuver Rate [/h] | 0 | 0 | 0 | 0 | 0 | 0 | 0 | 0 | 0 | 0 | 0 | 0 |
| Local Bus Stopping Rate [/h] | 0 | 0 | 0 | 0 | 0 | 0 | 0 | 0 | 0 | 0 | 0 | 0 |
| Pedestrian Volume [ped/h] | 0 | | | 0 | | | 0 | | | 0 | | |
| Bicycle Volume [bicycles/h] | 0 | | | 0 | | | 0 | | | 0 | | |

**Intersection Settings**

| | |
|---|---|
| Located in CBD | No |
| Signal Coordination Group | 2 - NS - Cedar |
| Cycle Length [s] | 120 |
| Coordination Type | Time of Day Pattern Coordinated |
| Actuation Type | Fully actuated |
| Offset [s] | 71.0 |
| Offset Reference | LagFO |
| Permissive Mode | SingleBand |
| Lost time [s] | 12.00 |

**Phasing & Timing**

| Control Type | Protecte | Permiss | Permiss | Permiss | Permiss | Permiss | Permiss | Permiss | Permiss | Split | Split | Split |
|---|---|---|---|---|---|---|---|---|---|---|---|---|
| Signal group | 5 | 2 | 0 | 0 | 6 | 0 | 0 | 0 | 0 | 0 | 4 | 0 |
| Auxiliary Signal Groups | | | | | | | | | | | | |
| Lead / Lag | Lead | - | - | - | - | - | - | - | - | - | - | - |
| Minimum Green [s] | 5 | 5 | 0 | 0 | 5 | 0 | 0 | 0 | 0 | 0 | 5 | 0 |
| Maximum Green [s] | 30 | 30 | 0 | 0 | 30 | 0 | 0 | 0 | 0 | 0 | 30 | 0 |
| Amber [s] | 4.4 | 4.4 | 0.0 | 0.0 | 4.4 | 0.0 | 0.0 | 0.0 | 0.0 | 0.0 | 3.7 | 0.0 |
| All red [s] | 1.0 | 1.0 | 0.0 | 0.0 | 1.0 | 0.0 | 0.0 | 0.0 | 0.0 | 0.0 | 1.0 | 0.0 |
| Split [s] | 26 | 90 | 0 | 0 | 64 | 0 | 0 | 0 | 0 | 0 | 30 | 0 |
| Vehicle Extension [s] | 3.0 | 3.0 | 0.0 | 0.0 | 3.0 | 0.0 | 0.0 | 0.0 | 0.0 | 0.0 | 3.0 | 0.0 |
| Walk [s] | 0 | 7 | 0 | 0 | 7 | 0 | 0 | 0 | 0 | 0 | 7 | 0 |
| Pedestrian Clearance [s] | 0 | 17 | 0 | 0 | 17 | 0 | 0 | 0 | 0 | 0 | 10 | 0 |
| I1, Start-Up Lost Time [s] | 2.0 | 2.0 | 0.0 | 0.0 | 2.0 | 0.0 | 0.0 | 0.0 | 0.0 | 0.0 | 2.0 | 0.0 |
| I2, Clearance Lost Time [s] | 3.4 | 3.4 | 0.0 | 0.0 | 3.4 | 0.0 | 0.0 | 0.0 | 0.0 | 0.0 | 2.7 | 0.0 |
| Minimum Recall | No | No | | | No | | | | | | No | |
| Maximum Recall | No | No | | | No | | | | | | No | |
| Pedestrian Recall | No | No | | | No | | | | | | No | |
| Detector Location [ft] | 0.0 | 0.0 | 0.0 | 0.0 | 0.0 | 0.0 | 0.0 | 0.0 | 0.0 | 0.0 | 0.0 | 0.0 |
| Detector Length [ft] | 0.0 | 0.0 | 0.0 | 0.0 | 0.0 | 0.0 | 0.0 | 0.0 | 0.0 | 0.0 | 0.0 | 0.0 |
| I, Upstream Filtering Factor | 1.00 | 1.00 | 1.00 | 1.00 | 1.00 | 1.00 | 1.00 | 1.00 | 1.00 | 1.00 | 1.00 | 1.00 |

**Exclusive Pedestrian Phase**

| | |
|---|---|
| Pedestrian Signal Group | 0 |
| Pedestrian Walk [s] | 0 |
| Pedestrian Clearance [s] | 0 |

**Lane Group Calculations**

| Lane Group | L | C | C | R | | C | R |
|---|---|---|---|---|---|---|---|
| L, Total Lost Time per Cycle [s] | 5.40 | 5.40 | 5.40 | 5.40 | | 4.70 | 4.70 |
| l1_p, Permitted Start-Up Lost Time [s] | 0.00 | 0.00 | 0.00 | 0.00 | | 0.00 | 0.00 |
| l2, Clearance Lost Time [s] | 3.40 | 3.40 | 3.40 | 3.40 | | 2.70 | 2.70 |
| g_i, Effective Green Time [s] | 21 | 85 | 59 | 59 | | 25 | 25 |
| g / C, Green / Cycle | 0.17 | 0.70 | 0.49 | 0.49 | | 0.21 | 0.21 |
| (v / s)_i Volume / Saturation Flow Rate | 0.18 | 0.34 | 0.25 | 0.62 | | 0.21 | 0.21 |
| s, saturation flow rate [veh/h] | 1723 | 3445 | 4929 | 1538 | | 1654 | 1524 |
| c, Capacity [veh/h] | 296 | 2428 | 2405 | 751 | | 349 | 321 |
| d1, Uniform Delay [s] | 49.68 | 7.92 | 20.94 | 30.71 | | 47.33 | 47.33 |
| k, delay calibration | 0.43 | 0.50 | 0.50 | 0.50 | | 0.43 | 0.44 |
| I, Upstream Filtering Factor | 1.00 | 1.00 | 1.00 | 1.00 | | 1.00 | 1.00 |
| d2, Incremental Delay [s] | 64.12 | 0.69 | 0.78 | 130.64 | | 46.09 | 51.44 |
| d3, Initial Queue Delay [s] | 0.00 | 0.00 | 0.00 | 0.00 | | 0.00 | 0.00 |
| Rp, platoon ratio | 1.00 | 1.00 | 1.00 | 1.00 | | 1.00 | 1.00 |
| PF, progression factor | 1.00 | 1.00 | 1.00 | 1.00 | | 1.00 | 1.00 |

**Lane Group Results**

| | | | | | | | |
|---|---|---|---|---|---|---|---|
| X, volume / capacity | 1.06 | 0.48 | 0.51 | 1.27 | | 1.01 | 1.02 |
| d, Delay for Lane Group [s/veh] | 113.80 | 8.61 | 21.71 | 161.35 | | 93.42 | 98.77 |
| Lane Group LOS | F | A | C | F | | F | F |
| Critical Lane Group | Yes | No | No | Yes | | No | Yes |
| 50th-Percentile Queue Length [veh] | 13.95 | 6.00 | 7.65 | 47.35 | | 14.82 | 14.13 |
| 50th-Percentile Queue Length [ft] | 348.86 | 150.06 | 191.13 | 1183.78 | | 370.55 | 353.27 |
| 95th-Percentile Queue Length [veh] | 20.65 | 10.02 | 12.18 | 69.08 | | 21.21 | 20.49 |
| 95th-Percentile Queue Length [ft] | 516.17 | 250.51 | 304.49 | 1727.12 | | 530.15 | 512.30 |

**Movement, Approach, & Intersection Results**

| | | | | | | | | | | | | |
|---|---|---|---|---|---|---|---|---|---|---|---|---|
| d_M, Delay for Movement [s/veh] | 113.80 | 8.61 | 0.00 | 0.00 | 21.71 | 161.35 | 0.00 | 0.00 | 0.00 | 93.42 | 93.42 | 97.67 |
| Movement LOS | F | A | | | C | F | | | | F | F | F |
| d_A, Approach Delay [s/veh] | 30.78 | | | 82.69 | | | 0.00 | | | 96.00 | | |
| Approach LOS | C | | | F | | | A | | | F | | |
| d_I, Intersection Delay [s/veh] | 67.01 | | | | | | | | | | | |
| Intersection LOS | E | | | | | | | | | | | |
| Intersection V/C | 1.127 | | | | | | | | | | | |

## Sequence

| | | | | | | | | | | | | | | | | |
|---|---|---|---|---|---|---|---|---|---|---|---|---|---|---|---|---|
| Ring 1 | - | 2 | 4 | - | - | - | - | - | - | - | - | - | - | - | - | - |
| Ring 2 | 5 | 6 | - | - | - | - | - | - | - | - | - | - | - | - | - | - |
| Ring 3 | - | - | - | - | - | - | - | - | - | - | - | - | - | - | - | - |
| Ring 4 | - | - | - | - | - | - | - | - | - | - | - | - | - | - | - | - |

**Intersection Level Of Service Report**
**Intersection 15: Cedar Ave (NS) / I-10 Eastbound Ramps (EW)**

| | | | |
|---|---|---|---|
| Control Type: | Signalized | Delay (sec / veh): | 40.6 |
| Analysis Method: | HCM 2010 | Level Of Service: | D |
| Analysis Period: | 15 minutes | Volume to Capacity (v/c): | 0.826 |

**Intersection Setup**

| Name | Cedar Avenue | | | Cedar Avenue | | | | | | I-10 Eastbound Ramps | | |
|---|---|---|---|---|---|---|---|---|---|---|---|---|
| Approach | Northbound | | | Southbound | | | Eastbound | | | Westbound | | |
| Lane Configuration | | | | | | | | | | | | |
| Turning Movement | Left | Thru | Right | Left | Thru | Right | Left | Thru | Right | Left | Thru | Right |
| Lane Width [ft] | 12.00 | 12.00 | 12.00 | 12.00 | 12.00 | 12.00 | 12.00 | 12.00 | 12.00 | 12.00 | 12.00 | 12.00 |
| No. of Lanes in Pocket | 0 | 0 | 1 | 1 | 0 | 0 | 1 | 0 | 0 | 0 | 0 | 0 |
| Pocket Length [ft] | 100.00 | 100.00 | 555.00 | 305.00 | 100.00 | 100.00 | 340.00 | 100.00 | 100.00 | 100.00 | 100.00 | 100.00 |
| Speed [mph] | 40.00 | | | 40.00 | | | 30.00 | | | 30.00 | | |
| Grade [%] | 0.00 | | | 0.00 | | | 0.00 | | | 0.00 | | |
| Crosswalk | No | | | No | | | Yes | | | Yes | | |

**volumes**

| Name | Cedar Avenue | | | Cedar Avenue | | | | | | I-10 Eastbound Ramps | | |
|---|---|---|---|---|---|---|---|---|---|---|---|---|
| Base Volume Input [veh/h] | 0 | 928 | 313 | 467 | 924 | 0 | 468 | 2 | 221 | 0 | 0 | 0 |
| Base Volume Adjustment Factor | 1.0000 | 1.0000 | 1.0000 | 1.0000 | 1.0000 | 1.0000 | 1.0000 | 1.0000 | 1.0000 | 1.0000 | 1.0000 | 1.0000 |
| Heavy Vehicles Percentage [%] | 2.00 | 5.00 | 5.00 | 5.00 | 5.00 | 2.00 | 6.00 | 6.00 | 6.00 | 2.00 | 2.00 | 2.00 |
| Growth Rate | 1.00 | 1.00 | 1.00 | 1.00 | 1.00 | 1.00 | 1.00 | 1.00 | 1.00 | 1.00 | 1.00 | 1.00 |
| In-Process Volume [veh/h] | 0 | 0 | 0 | 0 | 0 | 0 | 0 | 0 | 0 | 0 | 0 | 0 |
| Site-Generated Trips [veh/h] | 0 | 0 | 0 | 0 | 0 | 0 | 0 | 0 | 0 | 0 | 0 | 0 |
| Diverted Trips [veh/h] | 0 | 0 | 0 | 0 | 0 | 0 | 0 | 0 | 0 | 0 | 0 | 0 |
| Pass-by Trips [veh/h] | 0 | 0 | 0 | 0 | 0 | 0 | 0 | 0 | 0 | 0 | 0 | 0 |
| Existing Site Adjustment Volume [veh/h] | 0 | 0 | 0 | 0 | 0 | 0 | 0 | 0 | 0 | 0 | 0 | 0 |
| Other Volume [veh/h] | 0 | 0 | 0 | 0 | 0 | 0 | 0 | 0 | 0 | 0 | 0 | 0 |
| Right-Turn on Red Volume [veh/h] | 0 | 0 | 0 | 0 | 0 | 0 | 0 | 0 | 0 | 0 | 0 | 0 |
| Total Hourly Volume [veh/h] | 0 | 928 | 313 | 467 | 924 | 0 | 468 | 2 | 221 | 0 | 0 | 0 |
| Peak Hour Factor | 1.0000 | 0.9240 | 0.9240 | 0.9240 | 0.9240 | 1.0000 | 0.9240 | 0.9240 | 0.9240 | 1.0000 | 1.0000 | 1.0000 |
| Other Adjustment Factor | 1.0000 | 1.0000 | 1.0000 | 1.0000 | 1.0000 | 1.0000 | 1.0000 | 1.0000 | 1.0000 | 1.0000 | 1.0000 | 1.0000 |
| Total 15-Minute Volume [veh/h] | 0 | 251 | 85 | 126 | 250 | 0 | 127 | 1 | 60 | 0 | 0 | 0 |
| Total Analysis Volume [veh/h] | 0 | 1004 | 339 | 505 | 1000 | 0 | 506 | 2 | 239 | 0 | 0 | 0 |
| Presence of On-Street Parking | No | | No | No | | No | No | | No | | | |
| On-Street Parking Maneuver Rate [/h] | 0 | 0 | 0 | 0 | 0 | 0 | 0 | 0 | 0 | 0 | 0 | 0 |
| Local Bus Stopping Rate [/h] | 0 | 0 | 0 | 0 | 0 | 0 | 0 | 0 | 0 | 0 | 0 | 0 |
| Pedestrian Volume [ped/h] | 0 | | | 0 | | | 0 | | | 0 | | |
| Bicycle Volume [bicycles/h] | 0 | | | 0 | | | 0 | | | 0 | | |

**Intersection Settings**

| | |
|---|---|
| Located in CBD | No |
| Signal Coordination Group | 2 - NS - Cedar |
| Cycle Length [s] | 120 |
| Coordination Type | Time of Day Pattern Coordinated |
| Actuation Type | Fully actuated |
| Offset [s] | 65.0 |
| Offset Reference | LagFO |
| Permissive Mode | SingleBand |
| Lost time [s] | 12.00 |

**Phasing & Timing**

| Control Type | Permiss | Permiss | Permiss | Protecte | Permiss | Permiss | Permiss | Permiss | Permiss | Permiss | Permiss | Permiss |
|---|---|---|---|---|---|---|---|---|---|---|---|---|
| Signal group | 0 | 2 | 0 | 1 | 6 | 0 | 0 | 8 | 0 | 0 | 0 | 0 |
| Auxiliary Signal Groups | | | | | | | | | | | | |
| Lead / Lag | - | - | - | Lead | - | - | - | - | - | - | - | - |
| Minimum Green [s] | 0 | 5 | 0 | 5 | 5 | 0 | 0 | 5 | 0 | 0 | 0 | 0 |
| Maximum Green [s] | 0 | 30 | 0 | 30 | 30 | 0 | 0 | 30 | 0 | 0 | 0 | 0 |
| Amber [s] | 0.0 | 4.4 | 0.0 | 4.4 | 4.4 | 0.0 | 0.0 | 3.7 | 0.0 | 0.0 | 0.0 | 0.0 |
| All red [s] | 0.0 | 1.0 | 0.0 | 1.0 | 1.0 | 0.0 | 0.0 | 1.0 | 0.0 | 0.0 | 0.0 | 0.0 |
| Split [s] | 0 | 42 | 0 | 43 | 85 | 0 | 0 | 35 | 0 | 0 | 0 | 0 |
| Vehicle Extension [s] | 0.0 | 3.0 | 0.0 | 3.0 | 3.0 | 0.0 | 0.0 | 3.0 | 0.0 | 0.0 | 0.0 | 0.0 |
| Walk [s] | 0 | 7 | 0 | 0 | 7 | 0 | 0 | 7 | 0 | 0 | 0 | 0 |
| Pedestrian Clearance [s] | 0 | 21 | 0 | 0 | 16 | 0 | 0 | 10 | 0 | 0 | 0 | 0 |
| I1, Start-Up Lost Time [s] | 0.0 | 2.0 | 0.0 | 2.0 | 2.0 | 0.0 | 0.0 | 2.0 | 0.0 | 0.0 | 0.0 | 0.0 |
| I2, Clearance Lost Time [s] | 0.0 | 3.4 | 0.0 | 3.4 | 3.4 | 0.0 | 0.0 | 2.7 | 0.0 | 0.0 | 0.0 | 0.0 |
| Minimum Recall | | No | | No | No | | | No | | | | |
| Maximum Recall | | No | | No | No | | | No | | | | |
| Pedestrian Recall | | No | | No | No | | | No | | | | |
| Detector Location [ft] | 0.0 | 0.0 | 0.0 | 0.0 | 0.0 | 0.0 | 0.0 | 0.0 | 0.0 | 0.0 | 0.0 | 0.0 |
| Detector Length [ft] | 0.0 | 0.0 | 0.0 | 0.0 | 0.0 | 0.0 | 0.0 | 0.0 | 0.0 | 0.0 | 0.0 | 0.0 |
| I, Upstream Filtering Factor | 1.00 | 1.00 | 1.00 | 1.00 | 1.00 | 1.00 | 1.00 | 1.00 | 1.00 | 1.00 | 1.00 | 1.00 |

**Exclusive Pedestrian Phase**

| | |
|---|---|
| Pedestrian Signal Group | 0 |
| Pedestrian Walk [s] | 0 |
| Pedestrian Clearance [s] | 0 |

**Lane Group Calculations**

| Lane Group | C | R | L | C | L | C | |
|---|---|---|---|---|---|---|---|
| L, Total Lost Time per Cycle [s] | 5.40 | 5.40 | 5.40 | 5.40 | 4.70 | 4.70 | |
| l1_p, Permitted Start-Up Lost Time [s] | 0.00 | 0.00 | 0.00 | 0.00 | 0.00 | 0.00 | |
| l2, Clearance Lost Time [s] | 3.40 | 3.40 | 3.40 | 3.40 | 2.70 | 2.70 | |
| g_i, Effective Green Time [s] | 38 | 38 | 37 | 81 | 29 | 29 | |
| g / C, Green / Cycle | 0.32 | 0.32 | 0.31 | 0.67 | 0.24 | 0.24 | |
| (v / s)_i Volume / Saturation Flow Rate | 0.20 | 0.22 | 0.29 | 0.29 | 0.22 | 0.23 | |
| s, saturation flow rate [veh/h] | 4929 | 1538 | 1723 | 3445 | 1707 | 1582 | |
| c, Capacity [veh/h] | 1581 | 493 | 527 | 2313 | 417 | 387 | |
| d1, Uniform Delay [s] | 34.76 | 35.50 | 40.90 | 9.13 | 44.16 | 44.43 | |
| k, delay calibration | 0.50 | 0.50 | 0.39 | 0.50 | 0.36 | 0.37 | |
| I, Upstream Filtering Factor | 1.00 | 1.00 | 1.00 | 1.00 | 1.00 | 1.00 | |
| d2, Incremental Delay [s] | 1.96 | 7.61 | 25.80 | 0.59 | 21.94 | 26.78 | |
| d3, Initial Queue Delay [s] | 0.00 | 0.00 | 0.00 | 0.00 | 0.00 | 0.00 | |
| Rp, platoon ratio | 1.00 | 1.00 | 1.00 | 1.00 | 1.00 | 1.00 | |
| PF, progression factor | 1.00 | 1.00 | 1.00 | 1.00 | 1.00 | 1.00 | |

**Lane Group Results**

| | | | | | | | |
|---|---|---|---|---|---|---|---|
| X, volume / capacity | 0.64 | 0.69 | 0.96 | 0.43 | 0.92 | 0.94 | |
| d, Delay for Lane Group [s/veh] | 36.72 | 43.12 | 66.70 | 9.72 | 66.11 | 71.21 | |
| Lane Group LOS | D | D | E | A | E | E | |
| Critical Lane Group | No | Yes | Yes | No | No | Yes | |
| 50th-Percentile Queue Length [veh] | 8.40 | 9.44 | 17.92 | 5.56 | 13.58 | 13.38 | |
| 50th-Percentile Queue Length [ft] | 210.06 | 236.00 | 447.90 | 138.95 | 339.56 | 334.57 | |
| 95th-Percentile Queue Length [veh] | 13.16 | 14.48 | 24.86 | 9.42 | 19.63 | 19.38 | |
| 95th-Percentile Queue Length [ft] | 328.91 | 361.97 | 621.44 | 235.60 | 490.66 | 484.55 | |

**Movement, Approach, & Intersection Results**

| | | | | | | | | | | | | |
|---|---|---|---|---|---|---|---|---|---|---|---|---|
| d_M, Delay for Movement [s/veh] | 0.00 | 36.72 | 43.12 | 66.70 | 9.72 | 0.00 | 67.39 | 71.21 | 71.21 | 0.00 | 0.00 | 0.00 |
| Movement LOS | | D | D | E | A | | E | E | E | | | |
| d_A, Approach Delay [s/veh] | 38.33 | | | 28.84 | | | 68.59 | | | 0.00 | | |
| Approach LOS | D | | | C | | | E | | | A | | |
| d_I, Intersection Delay [s/veh] | 40.65 | | | | | | | | | | | |
| Intersection LOS | D | | | | | | | | | | | |
| Intersection V/C | 0.826 | | | | | | | | | | | |

## Sequence

| | | | | | | | | | | | | | | | | |
|---|---|---|---|---|---|---|---|---|---|---|---|---|---|---|---|---|
| Ring 1 | 1 | 2 | - | - | - | - | - | - | - | - | - | - | - | - | - | - |
| Ring 2 | - | 6 | 8 | - | - | - | - | - | - | - | - | - | - | - | - | - |
| Ring 3 | - | - | - | - | - | - | - | - | - | - | - | - | - | - | - | - |
| Ring 4 | - | - | - | - | - | - | - | - | - | - | - | - | - | - | - | - |

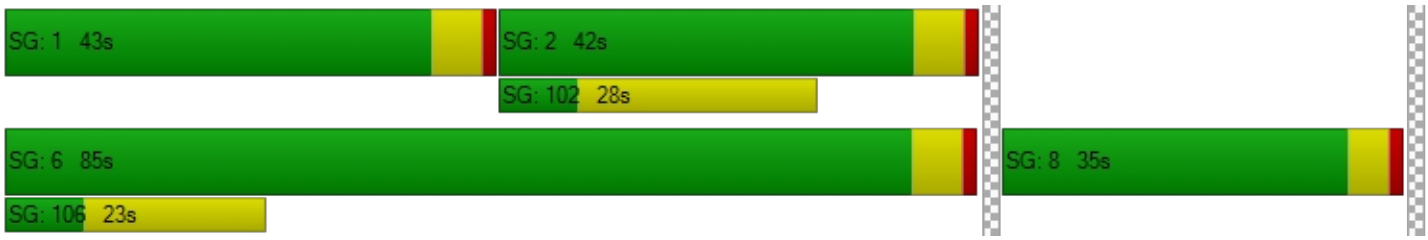

**Intersection Level Of Service Report**
**Intersection 16: Cedar Ave (NS) / Slover Ave (EW)**

| | | | |
|---|---|---|---|
| Control Type: | Signalized | Delay (sec / veh): | 22.1 |
| Analysis Method: | HCM 2010 | Level Of Service: | C |
| Analysis Period: | 15 minutes | Volume to Capacity (v/c): | 0.566 |

**Intersection Setup**

| Name | Cedar Avenue | | | Cedar Avenue | | | Slover Avenue | | | Slover Avenue | | |
|---|---|---|---|---|---|---|---|---|---|---|---|---|
| Approach | Northbound | | | Southbound | | | Eastbound | | | Westbound | | |
| Lane Configuration | | | | | | | | | | | | |
| Turning Movement | Left | Thru | Right | Left | Thru | Right | Left | Thru | Right | Left | Thru | Right |
| Lane Width [ft] | 12.00 | 12.00 | 12.00 | 12.00 | 12.00 | 12.00 | 12.00 | 12.00 | 12.00 | 12.00 | 12.00 | 12.00 |
| No. of Lanes in Pocket | 1 | 0 | 0 | 1 | 0 | 0 | 1 | 0 | 0 | 1 | 0 | 0 |
| Pocket Length [ft] | 200.00 | 100.00 | 100.00 | 85.00 | 100.00 | 100.00 | 185.00 | 100.00 | 100.00 | 150.00 | 100.00 | 100.00 |
| Speed [mph] | 45.00 | | | 45.00 | | | 50.00 | | | 50.00 | | |
| Grade [%] | 0.00 | | | 0.00 | | | 0.00 | | | 0.00 | | |
| Crosswalk | Yes | | | Yes | | | Yes | | | Yes | | |

**volumes**

| Name | Cedar Avenue | | | Cedar Avenue | | | Slover Avenue | | | Slover Avenue | | |
|---|---|---|---|---|---|---|---|---|---|---|---|---|
| Base Volume Input [veh/h] | 45 | 790 | 55 | 77 | 704 | 16 | 19 | 108 | 72 | 150 | 68 | 32 |
| Base Volume Adjustment Factor | 1.0000 | 1.0000 | 1.0000 | 1.0000 | 1.0000 | 1.0000 | 1.0000 | 1.0000 | 1.0000 | 1.0000 | 1.0000 | 1.0000 |
| Heavy Vehicles Percentage [%] | 5.00 | 5.00 | 5.00 | 5.00 | 5.00 | 5.00 | 2.00 | 2.00 | 2.00 | 2.00 | 2.00 | 2.00 |
| Growth Rate | 1.00 | 1.00 | 1.00 | 1.00 | 1.00 | 1.00 | 1.00 | 1.00 | 1.00 | 1.00 | 1.00 | 1.00 |
| In-Process Volume [veh/h] | 0 | 0 | 0 | 0 | 0 | 0 | 0 | 0 | 0 | 0 | 0 | 0 |
| Site-Generated Trips [veh/h] | 0 | 0 | 0 | 0 | 0 | 0 | 0 | 0 | 0 | 0 | 0 | 0 |
| Diverted Trips [veh/h] | 0 | 0 | 0 | 0 | 0 | 0 | 0 | 0 | 0 | 0 | 0 | 0 |
| Pass-by Trips [veh/h] | 0 | 0 | 0 | 0 | 0 | 0 | 0 | 0 | 0 | 0 | 0 | 0 |
| Existing Site Adjustment Volume [veh/h] | 0 | 0 | 0 | 0 | 0 | 0 | 0 | 0 | 0 | 0 | 0 | 0 |
| Other Volume [veh/h] | 0 | 0 | 0 | 0 | 0 | 0 | 0 | 0 | 0 | 0 | 0 | 0 |
| Right-Turn on Red Volume [veh/h] | 0 | 0 | 0 | 0 | 0 | 0 | 0 | 0 | 0 | 0 | 0 | 0 |
| Total Hourly Volume [veh/h] | 45 | 790 | 55 | 77 | 704 | 16 | 19 | 108 | 72 | 150 | 68 | 32 |
| Peak Hour Factor | 0.8589 | 0.8890 | 0.8890 | 0.8890 | 0.8890 | 0.8890 | 0.8890 | 0.8890 | 0.8890 | 0.8890 | 0.8890 | 0.8890 |
| Other Adjustment Factor | 1.0000 | 1.0000 | 1.0000 | 1.0000 | 1.0000 | 1.0000 | 1.0000 | 1.0000 | 1.0000 | 1.0000 | 1.0000 | 1.0000 |
| Total 15-Minute Volume [veh/h] | 13 | 222 | 15 | 22 | 198 | 4 | 5 | 30 | 20 | 42 | 19 | 9 |
| Total Analysis Volume [veh/h] | 52 | 889 | 62 | 87 | 792 | 18 | 21 | 121 | 81 | 169 | 76 | 36 |
| Presence of On-Street Parking | No | | No | No | | No | No | | No | No | | No |
| On-Street Parking Maneuver Rate [/h] | 0 | 0 | 0 | 0 | 0 | 0 | 0 | 0 | 0 | 0 | 0 | 0 |
| Local Bus Stopping Rate [/h] | 0 | 0 | 0 | 0 | 0 | 0 | 0 | 0 | 0 | 0 | 0 | 0 |
| Pedestrian Volume [ped/h] | 0 | | | 0 | | | 0 | | | 0 | | |
| Bicycle Volume [bicycles/h] | 0 | | | 0 | | | 0 | | | 0 | | |

**Intersection Settings**

| | |
|---|---|
| Located in CBD | No |
| Signal Coordination Group | 2 - NS - Cedar |
| Cycle Length [s] | 120 |
| Coordination Type | Time of Day Pattern Coordinated |
| Actuation Type | Fully actuated |
| Offset [s] | 36.0 |
| Offset Reference | LagFO |
| Permissive Mode | SingleBand |
| Lost time [s] | 16.00 |

**Phasing & Timing**

| Control Type | Protecte | Permiss | Permiss | Protecte | Permiss | Permiss | Protecte | Permiss | Permiss | Protecte | Permiss | Overlap |
|---|---|---|---|---|---|---|---|---|---|---|---|---|
| Signal group | 5 | 2 | 0 | 1 | 6 | 0 | 3 | 8 | 0 | 7 | 4 | 4 |
| Auxiliary Signal Groups | | | | | | | | | | | | 1,4 |
| Lead / Lag | Lead | - | - | Lead | - | - | Lead | - | - | Lead | - | - |
| Minimum Green [s] | 5 | 5 | 0 | 5 | 5 | 0 | 5 | 5 | 0 | 5 | 5 | 5 |
| Maximum Green [s] | 30 | 30 | 0 | 30 | 30 | 0 | 30 | 30 | 0 | 30 | 30 | 30 |
| Amber [s] | 4.8 | 4.8 | 0.0 | 4.8 | 4.8 | 0.0 | 5.2 | 5.2 | 0.0 | 5.2 | 5.2 | 5.2 |
| All red [s] | 1.0 | 1.0 | 0.0 | 1.0 | 1.0 | 0.0 | 1.0 | 1.0 | 0.0 | 1.0 | 1.0 | 1.0 |
| Split [s] | 11 | 50 | 0 | 11 | 50 | 0 | 12 | 40 | 0 | 19 | 47 | 47 |
| Vehicle Extension [s] | 3.0 | 3.0 | 0.0 | 3.0 | 3.0 | 0.0 | 3.0 | 3.0 | 0.0 | 3.0 | 3.0 | 3.0 |
| Walk [s] | 0 | 7 | 0 | 0 | 7 | 0 | 0 | 7 | 0 | 0 | 7 | 7 |
| Pedestrian Clearance [s] | 0 | 31 | 0 | 0 | 20 | 0 | 0 | 26 | 0 | 0 | 31 | 31 |
| I1, Start-Up Lost Time [s] | 2.0 | 2.0 | 0.0 | 2.0 | 2.0 | 0.0 | 2.0 | 2.0 | 0.0 | 2.0 | 2.0 | 2.0 |
| I2, Clearance Lost Time [s] | 3.8 | 3.8 | 0.0 | 3.8 | 3.8 | 0.0 | 4.2 | 4.2 | 0.0 | 4.2 | 4.2 | 4.2 |
| Minimum Recall | No | No | | No | No | | No | No | | No | No | No |
| Maximum Recall | No | No | | No | No | | No | No | | No | No | No |
| Pedestrian Recall | No | No | | No | No | | No | No | | No | No | No |
| Detector Location [ft] | 0.0 | 0.0 | 0.0 | 0.0 | 0.0 | 0.0 | 0.0 | 0.0 | 0.0 | 0.0 | 0.0 | 0.0 |
| Detector Length [ft] | 0.0 | 0.0 | 0.0 | 0.0 | 0.0 | 0.0 | 0.0 | 0.0 | 0.0 | 0.0 | 0.0 | 0.0 |
| I, Upstream Filtering Factor | 1.00 | 1.00 | 1.00 | 1.00 | 1.00 | 1.00 | 1.00 | 1.00 | 1.00 | 1.00 | 1.00 | 1.00 |

**Exclusive Pedestrian Phase**

| | |
|---|---|
| Pedestrian Signal Group | 0 |
| Pedestrian Walk [s] | 0 |
| Pedestrian Clearance [s] | 0 |

**Lane Group Calculations**

| Lane Group | L | C | C | L | C | C | L | C | L | C | R |
|---|---|---|---|---|---|---|---|---|---|---|---|
| L, Total Lost Time per Cycle [s] | 5.80 | 5.80 | 5.80 | 5.80 | 5.80 | 5.80 | 6.20 | 6.20 | 6.20 | 6.20 | 5.80 |
| l1_p, Permitted Start-Up Lost Time [s] | 0.00 | 0.00 | 0.00 | 0.00 | 0.00 | 0.00 | 0.00 | 0.00 | 0.00 | 0.00 | 0.00 |
| l2, Clearance Lost Time [s] | 0.00 | 3.80 | 3.80 | 0.00 | 3.80 | 3.80 | 4.20 | 4.20 | 4.20 | 4.20 | 0.00 |
| g_i, Effective Green Time [s] | 73 | 64 | 64 | 73 | 63 | 63 | 3 | 16 | 13 | 26 | 36 |
| g / C, Green / Cycle | 0.61 | 0.53 | 0.53 | 0.61 | 0.52 | 0.52 | 0.02 | 0.13 | 0.11 | 0.22 | 0.30 |
| (v / s)_i Volume / Saturation Flow Rate | 0.07 | 0.27 | 0.27 | 0.13 | 0.22 | 0.22 | 0.01 | 0.12 | 0.10 | 0.04 | 0.02 |
| s, saturation flow rate [veh/h] | 769 | 1810 | 1768 | 688 | 1810 | 1795 | 1774 | 1740 | 1774 | 1863 | 1583 |
| c, Capacity [veh/h] | 487 | 957 | 935 | 431 | 948 | 940 | 39 | 233 | 190 | 409 | 477 |
| d1, Uniform Delay [s] | 5.56 | 10.49 | 10.49 | 6.36 | 10.38 | 10.38 | 58.13 | 50.93 | 52.91 | 38.15 | 30.02 |
| k, delay calibration | 0.50 | 0.50 | 0.50 | 0.50 | 0.50 | 0.50 | 0.11 | 0.11 | 0.24 | 0.11 | 0.11 |
| I, Upstream Filtering Factor | 1.00 | 1.00 | 1.00 | 1.00 | 1.00 | 1.00 | 1.00 | 1.00 | 1.00 | 1.00 | 1.00 |
| d2, Incremental Delay [s] | 0.44 | 1.88 | 1.93 | 1.05 | 1.42 | 1.43 | 11.12 | 9.30 | 24.74 | 0.22 | 0.07 |
| d3, Initial Queue Delay [s] | 0.00 | 0.00 | 0.00 | 0.00 | 0.00 | 0.00 | 0.00 | 0.00 | 0.00 | 0.00 | 0.00 |
| Rp, platoon ratio | 1.33 | 1.33 | 1.33 | 1.33 | 1.33 | 1.33 | 1.00 | 1.00 | 1.00 | 1.00 | 1.00 |
| PF, progression factor | 1.00 | 1.00 | 1.00 | 1.00 | 1.00 | 1.00 | 1.00 | 1.00 | 1.00 | 1.00 | 1.00 |

**Lane Group Results**

| | | | | | | | | | | | |
|---|---|---|---|---|---|---|---|---|---|---|---|
| X, volume / capacity | 0.11 | 0.50 | 0.50 | 0.20 | 0.43 | 0.43 | 0.54 | 0.87 | 0.89 | 0.19 | 0.08 |
| d, Delay for Lane Group [s/veh] | 6.00 | 12.38 | 12.42 | 7.41 | 11.80 | 11.82 | 69.25 | 60.23 | 77.65 | 38.37 | 30.09 |
| Lane Group LOS | A | B | B | A | B | B | E | E | E | D | C |
| Critical Lane Group | No | No | Yes | Yes | No | No | No | Yes | Yes | No | No |
| 50th-Percentile Queue Length [veh] | 0.30 | 4.87 | 4.77 | 0.54 | 4.06 | 4.03 | 0.73 | 6.34 | 6.16 | 1.79 | 0.73 |
| 50th-Percentile Queue Length [ft] | 7.57 | 121.65 | 119.17 | 13.42 | 101.41 | 100.70 | 18.33 | 158.42 | 154.02 | 44.67 | 18.21 |
| 95th-Percentile Queue Length [veh] | 0.55 | 8.48 | 8.35 | 0.97 | 7.30 | 7.25 | 1.32 | 10.46 | 10.23 | 3.22 | 1.31 |
| 95th-Percentile Queue Length [ft] | 13.63 | 212.09 | 208.68 | 24.16 | 182.54 | 181.26 | 32.99 | 261.62 | 255.78 | 80.40 | 32.77 |

**Movement, Approach, & Intersection Results**

| | | | | | | | | | | | | |
|---|---|---|---|---|---|---|---|---|---|---|---|---|
| d_M, Delay for Movement [s/veh] | 6.00 | 12.40 | 12.42 | 7.41 | 11.81 | 11.82 | 69.25 | 60.23 | 60.23 | 77.65 | 38.37 | 30.09 |
| Movement LOS | A | B | B | A | B | B | E | E | E | E | D | C |
| d_A, Approach Delay [s/veh] | 12.07 | | | 11.38 | | | 61.08 | | | 60.93 | | |
| Approach LOS | B | | | B | | | E | | | E | | |
| d_I, Intersection Delay [s/veh] | 22.07 | | | | | | | | | | | |
| Intersection LOS | C | | | | | | | | | | | |
| Intersection V/C | 0.566 | | | | | | | | | | | |

## Sequence

| | | | | | | | | | | | | | | | | |
|---|---|---|---|---|---|---|---|---|---|---|---|---|---|---|---|---|
| Ring 1 | 1 | 2 | 3 | 4 | - | - | - | - | - | - | - | - | - | - | - | - |
| Ring 2 | 5 | 6 | 7 | 8 | - | - | - | - | - | - | - | - | - | - | - | - |
| Ring 3 | - | - | - | - | - | - | - | - | - | - | - | - | - | - | - | - |
| Ring 4 | - | - | - | - | - | - | - | - | - | - | - | - | - | - | - | - |

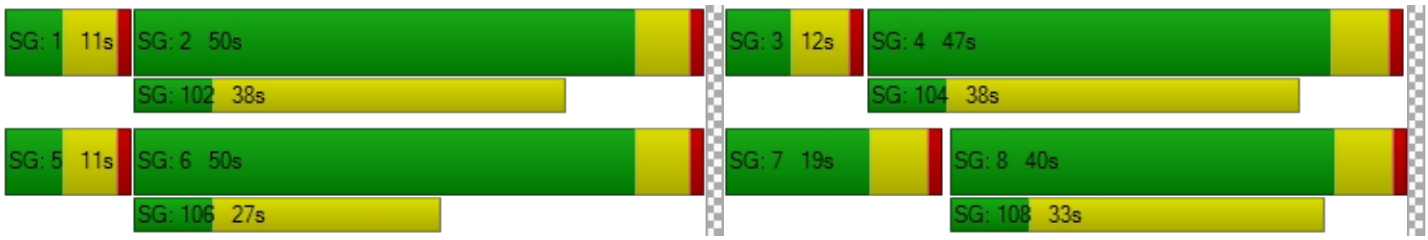

**Intersection Level Of Service Report**
**Intersection 1: Sierra Ave (NS) / San Bernardino Ave (EW)**

| | | | |
|---|---|---|---|
| Control Type: | Signalized | Delay (sec / veh): | 36.0 |
| Analysis Method: | HCM 2010 | Level Of Service: | D |
| Analysis Period: | 15 minutes | Volume to Capacity (v/c): | 0.761 |

**Intersection Setup**

| Name | Sierra Avenue | | | Sierra Avenue | | | San Bernardino Avenue | | | San Bernardino Avenue | | |
|---|---|---|---|---|---|---|---|---|---|---|---|---|
| Approach | Northbound | | | Southbound | | | Eastbound | | | Westbound | | |
| Lane Configuration | | | | | | | | | | | | |
| Turning Movement | Left | Thru | Right | Left | Thru | Right | Left | Thru | Right | Left | Thru | Right |
| Lane Width [ft] | 12.00 | 12.00 | 12.00 | 12.00 | 12.00 | 12.00 | 12.00 | 12.00 | 12.00 | 12.00 | 12.00 | 12.00 |
| No. of Lanes in Pocket | 1 | 0 | 1 | 1 | 0 | 0 | 1 | 0 | 0 | 1 | 0 | 0 |
| Pocket Length [ft] | 140.00 | 100.00 | 140.00 | 150.00 | 100.00 | 100.00 | 150.00 | 100.00 | 100.00 | 240.00 | 100.00 | 100.00 |
| Speed [mph] | 35.00 | | | 35.00 | | | 35.00 | | | 30.00 | | |
| Grade [%] | 0.00 | | | 0.00 | | | 0.00 | | | 0.00 | | |
| Crosswalk | Yes | | | Yes | | | Yes | | | Yes | | |

**volumes**

| Name | Sierra Avenue | | | Sierra Avenue | | | San Bernardino Avenue | | | San Bernardino Avenue | | |
|---|---|---|---|---|---|---|---|---|---|---|---|---|
| Base Volume Input [veh/h] | 228 | 1051 | 251 | 46 | 871 | 51 | 72 | 243 | 145 | 192 | 174 | 37 |
| Base Volume Adjustment Factor | 1.0000 | 1.0000 | 1.0000 | 1.0000 | 1.0000 | 1.0000 | 1.0000 | 1.0000 | 1.0000 | 1.0000 | 1.0000 | 1.0000 |
| Heavy Vehicles Percentage [%] | 2.00 | 2.00 | 2.00 | 2.00 | 2.00 | 2.00 | 2.00 | 2.00 | 2.00 | 2.00 | 2.00 | 2.00 |
| Growth Rate | 1.00 | 1.00 | 1.00 | 1.00 | 1.00 | 1.00 | 1.00 | 1.00 | 1.00 | 1.00 | 1.00 | 1.00 |
| In-Process Volume [veh/h] | 0 | 0 | 0 | 0 | 0 | 0 | 0 | 0 | 0 | 0 | 0 | 0 |
| Site-Generated Trips [veh/h] | 0 | 0 | 0 | 0 | 0 | 0 | 0 | 0 | 0 | 0 | 0 | 0 |
| Diverted Trips [veh/h] | 0 | 0 | 0 | 0 | 0 | 0 | 0 | 0 | 0 | 0 | 0 | 0 |
| Pass-by Trips [veh/h] | 0 | 0 | 0 | 0 | 0 | 0 | 0 | 0 | 0 | 0 | 0 | 0 |
| Existing Site Adjustment Volume [veh/h] | 0 | 0 | 0 | 0 | 0 | 0 | 0 | 0 | 0 | 0 | 0 | 0 |
| Other Volume [veh/h] | 0 | 0 | 0 | 0 | 0 | 0 | 0 | 0 | 0 | 0 | 0 | 0 |
| Right-Turn on Red Volume [veh/h] | 0 | 0 | 0 | 0 | 0 | 0 | 0 | 0 | 0 | 0 | 0 | 0 |
| Total Hourly Volume [veh/h] | 228 | 1051 | 251 | 46 | 871 | 51 | 72 | 243 | 145 | 192 | 174 | 37 |
| Peak Hour Factor | 0.9020 | 0.9020 | 0.9020 | 0.9020 | 0.9200 | 0.9020 | 0.9020 | 0.9020 | 0.9020 | 0.9020 | 0.9020 | 0.9020 |
| Other Adjustment Factor | 1.0000 | 1.0000 | 1.0000 | 1.0000 | 1.0000 | 1.0000 | 1.0000 | 1.0000 | 1.0000 | 1.0000 | 1.0000 | 1.0000 |
| Total 15-Minute Volume [veh/h] | 63 | 291 | 70 | 13 | 237 | 14 | 20 | 67 | 40 | 53 | 48 | 10 |
| Total Analysis Volume [veh/h] | 253 | 1165 | 278 | 51 | 947 | 57 | 80 | 269 | 161 | 213 | 193 | 41 |
| Presence of On-Street Parking | No | | No | No | | No | No | | No | No | | No |
| On-Street Parking Maneuver Rate [/h] | 0 | 0 | 0 | 0 | 0 | 0 | 0 | 0 | 0 | 0 | 0 | 0 |
| Local Bus Stopping Rate [/h] | 0 | 0 | 0 | 0 | 0 | 0 | 0 | 0 | 0 | 0 | 0 | 0 |
| Pedestrian Volume [ped/h] | 0 | | | 0 | | | 0 | | | 0 | | |
| Bicycle Volume [bicycles/h] | 0 | | | 0 | | | 0 | | | 0 | | |

**Intersection Settings**

| | |
|---|---|
| Located in CBD | No |
| Signal Coordination Group | 1 - NS - Sierra |
| Cycle Length [s] | 120 |
| Coordination Type | Time of Day Pattern Coordinated |
| Actuation Type | Fully actuated |
| Offset [s] | 0.0 |
| Offset Reference | LagFO |
| Permissive Mode | SingleBand |
| Lost time [s] | 16.00 |

**Phasing & Timing**

| Control Type | Protecte | Permiss | Permiss | Protecte | Permiss | Permiss | Protecte | Permiss | Permiss | Protecte | Permiss | Permiss |
|---|---|---|---|---|---|---|---|---|---|---|---|---|
| Signal group | 5 | 2 | 0 | 1 | 6 | 0 | 3 | 8 | 0 | 7 | 4 | 0 |
| Auxiliary Signal Groups | | | | | | | | | | | | |
| Lead / Lag | Lead | - | - | Lead | - | - | Lead | - | - | Lead | - | - |
| Minimum Green [s] | 5 | 5 | 0 | 5 | 5 | 0 | 5 | 5 | 0 | 5 | 5 | 0 |
| Maximum Green [s] | 30 | 30 | 0 | 30 | 30 | 0 | 30 | 30 | 0 | 30 | 30 | 0 |
| Amber [s] | 4.1 | 4.1 | 0.0 | 4.1 | 4.1 | 0.0 | 4.1 | 4.1 | 0.0 | 3.7 | 3.7 | 0.0 |
| All red [s] | 1.0 | 1.0 | 0.0 | 1.0 | 1.0 | 0.0 | 1.0 | 1.0 | 0.0 | 1.0 | 1.0 | 0.0 |
| Split [s] | 22 | 49 | 0 | 11 | 38 | 0 | 18 | 41 | 0 | 19 | 42 | 0 |
| Vehicle Extension [s] | 3.0 | 3.0 | 0.0 | 3.0 | 3.0 | 0.0 | 3.0 | 3.0 | 0.0 | 3.0 | 3.0 | 0.0 |
| Walk [s] | 0 | 7 | 0 | 0 | 7 | 0 | 0 | 7 | 0 | 0 | 7 | 0 |
| Pedestrian Clearance [s] | 0 | 22 | 0 | 0 | 23 | 0 | 0 | 28 | 0 | 0 | 25 | 0 |
| l1, Start-Up Lost Time [s] | 2.0 | 2.0 | 0.0 | 2.0 | 2.0 | 0.0 | 2.0 | 2.0 | 0.0 | 2.0 | 2.0 | 0.0 |
| l2, Clearance Lost Time [s] | 3.1 | 3.1 | 0.0 | 3.1 | 3.1 | 0.0 | 3.1 | 3.1 | 0.0 | 2.7 | 2.7 | 0.0 |
| Minimum Recall | No | No | | No | No | | No | No | | No | No | |
| Maximum Recall | No | No | | No | No | | No | No | | No | No | |
| Pedestrian Recall | No | No | | No | No | | No | No | | No | No | |
| Detector Location [ft] | 0.0 | 0.0 | 0.0 | 0.0 | 0.0 | 0.0 | 0.0 | 0.0 | 0.0 | 0.0 | 0.0 | 0.0 |
| Detector Length [ft] | 0.0 | 0.0 | 0.0 | 0.0 | 0.0 | 0.0 | 0.0 | 0.0 | 0.0 | 0.0 | 0.0 | 0.0 |
| I, Upstream Filtering Factor | 1.00 | 1.00 | 1.00 | 1.00 | 1.00 | 1.00 | 1.00 | 1.00 | 1.00 | 1.00 | 1.00 | 1.00 |

**Exclusive Pedestrian Phase**

| | |
|---|---|
| Pedestrian Signal Group | 0 |
| Pedestrian Walk [s] | 0 |
| Pedestrian Clearance [s] | 0 |

**Lane Group Calculations**

| Lane Group | L | C | R | L | C | C | L | C | C | L | C | C |
|---|---|---|---|---|---|---|---|---|---|---|---|---|
| L, Total Lost Time per Cycle [s] | 5.10 | 5.10 | 5.10 | 5.10 | 5.10 | 5.10 | 5.10 | 5.10 | 5.10 | 4.70 | 4.70 | 4.70 |
| l1_p, Permitted Start-Up Lost Time [s] | 0.00 | 0.00 | 0.00 | 0.00 | 0.00 | 0.00 | 0.00 | 0.00 | 0.00 | 0.00 | 0.00 | 0.00 |
| l2, Clearance Lost Time [s] | 3.10 | 3.10 | 3.10 | 3.10 | 3.10 | 3.10 | 3.10 | 3.10 | 3.10 | 2.70 | 2.70 | 2.70 |
| g_i, Effective Green Time [s] | 17 | 64 | 64 | 4 | 51 | 51 | 7 | 18 | 18 | 14 | 25 | 25 |
| g / C, Green / Cycle | 0.14 | 0.53 | 0.53 | 0.04 | 0.43 | 0.43 | 0.06 | 0.15 | 0.15 | 0.12 | 0.21 | 0.21 |
| (v / s)_i Volume / Saturation Flow Rate | 0.14 | 0.33 | 0.18 | 0.03 | 0.27 | 0.27 | 0.05 | 0.12 | 0.12 | 0.12 | 0.06 | 0.07 |
| s, saturation flow rate [veh/h] | 1774 | 3547 | 1583 | 1774 | 1863 | 1826 | 1774 | 1863 | 1635 | 1774 | 1863 | 1752 |
| c, Capacity [veh/h] | 250 | 1877 | 838 | 67 | 793 | 778 | 103 | 274 | 240 | 212 | 388 | 365 |
| d1, Uniform Delay [s] | 48.74 | 11.35 | 9.50 | 56.50 | 19.69 | 19.69 | 55.79 | 49.74 | 49.93 | 52.86 | 40.21 | 40.26 |
| k, delay calibration | 0.39 | 0.50 | 0.50 | 0.11 | 0.50 | 0.50 | 0.11 | 0.11 | 0.11 | 0.38 | 0.11 | 0.11 |
| I, Upstream Filtering Factor | 1.00 | 1.00 | 1.00 | 1.00 | 1.00 | 1.00 | 1.00 | 1.00 | 1.00 | 1.00 | 1.00 | 1.00 |
| d2, Incremental Delay [s] | 52.66 | 1.55 | 1.06 | 16.28 | 3.92 | 4.00 | 11.76 | 6.26 | 8.18 | 54.91 | 0.45 | 0.49 |
| d3, Initial Queue Delay [s] | 0.00 | 0.00 | 0.00 | 0.00 | 0.00 | 0.00 | 0.00 | 0.00 | 0.00 | 0.00 | 0.00 | 0.00 |
| Rp, platoon ratio | 1.33 | 1.33 | 1.33 | 1.33 | 1.33 | 1.33 | 1.00 | 1.00 | 1.00 | 1.00 | 1.00 | 1.00 |
| PF, progression factor | 1.00 | 1.00 | 1.00 | 1.00 | 1.00 | 1.00 | 1.00 | 1.00 | 1.00 | 1.00 | 1.00 | 1.00 |

**Lane Group Results**

| | | | | | | | | | | | | |
|---|---|---|---|---|---|---|---|---|---|---|---|---|
| X, volume / capacity | 1.01 | 0.62 | 0.33 | 0.76 | 0.64 | 0.64 | 0.78 | 0.83 | 0.85 | 1.00 | 0.31 | 0.31 |
| d, Delay for Lane Group [s/veh] | 101.40 | 12.90 | 10.57 | 72.78 | 23.61 | 23.69 | 67.54 | 56.00 | 58.11 | 107.77 | 40.65 | 40.74 |
| Lane Group LOS | F | B | B | E | C | C | E | E | E | F | D | D |
| Critical Lane Group | Yes | No | No | No | No | Yes | No | No | Yes | Yes | No | No |
| 50th-Percentile Queue Length [veh] | 10.74 | 6.24 | 2.69 | 1.80 | 9.01 | 8.85 | 2.71 | 6.99 | 6.45 | 9.62 | 3.05 | 2.93 |
| 50th-Percentile Queue Length [ft] | 268.42 | 155.97 | 67.34 | 45.11 | 225.35 | 221.35 | 67.70 | 174.85 | 161.32 | 240.45 | 76.30 | 73.21 |
| 95th-Percentile Queue Length [veh] | 16.19 | 10.33 | 4.85 | 3.25 | 13.94 | 13.73 | 4.87 | 11.33 | 10.62 | 14.73 | 5.49 | 5.27 |
| 95th-Percentile Queue Length [ft] | 404.69 | 258.37 | 121.21 | 81.19 | 348.44 | 343.34 | 121.86 | 283.28 | 265.47 | 368.23 | 137.35 | 131.77 |

**Movement, Approach, & Intersection Results**

| | | | | | | | | | | | | |
|---|---|---|---|---|---|---|---|---|---|---|---|---|
| d_M, Delay for Movement [s/veh] | 101.40 | 12.90 | 10.57 | 72.78 | 23.65 | 23.69 | 67.54 | 56.34 | 58.11 | 107.77 | 40.69 | 40.74 |
| Movement LOS | F | B | B | E | C | C | E | E | E | F | D | D |
| d_A, Approach Delay [s/veh] | 25.72 | | | 26.03 | | | 58.65 | | | 72.66 | | |
| Approach LOS | C | | | C | | | E | | | E | | |
| d_I, Intersection Delay [s/veh] | 36.00 | | | | | | | | | | | |
| Intersection LOS | D | | | | | | | | | | | |
| Intersection V/C | 0.761 | | | | | | | | | | | |

## Sequence

| | | | | | | | | | | | | | | | | |
|---|---|---|---|---|---|---|---|---|---|---|---|---|---|---|---|---|
| Ring 1 | 1 | 2 | 3 | 4 | - | - | - | - | - | - | - | - | - | - | - | - |
| Ring 2 | 5 | 6 | 7 | 8 | - | - | - | - | - | - | - | - | - | - | - | - |
| Ring 3 | - | - | - | - | - | - | - | - | - | - | - | - | - | - | - | - |
| Ring 4 | - | - | - | - | - | - | - | - | - | - | - | - | - | - | - | - |

**Intersection Level Of Service Report**
**Intersection 2: Sierra Ave (NS) / Valley Blvd (EW)**

| | | | |
|---|---|---|---|
| Control Type: | Signalized | Delay (sec / veh): | 38.3 |
| Analysis Method: | HCM 2010 | Level Of Service: | D |
| Analysis Period: | 15 minutes | Volume to Capacity (v/c): | 0.994 |

**Intersection Setup**

| Name | Sierra Avenue | | | Sierra Avenue | | | Valley Boulevard | | | Valley Boulevard | | |
|---|---|---|---|---|---|---|---|---|---|---|---|---|
| Approach | Northbound | | | Southbound | | | Eastbound | | | Westbound | | |
| Lane Configuration | | | | | | | | | | | | |
| Turning Movement | Left | Thru | Right | Left | Thru | Right | Left | Thru | Right | Left | Thru | Right |
| Lane Width [ft] | 12.00 | 12.00 | 12.00 | 12.00 | 12.00 | 12.00 | 12.00 | 12.00 | 12.00 | 12.00 | 12.00 | 12.00 |
| No. of Lanes in Pocket | 2 | 0 | 0 | 2 | 0 | 0 | 2 | 0 | 0 | 2 | 0 | 0 |
| Pocket Length [ft] | 370.00 | 100.00 | 100.00 | 165.00 | 100.00 | 100.00 | 260.00 | 100.00 | 100.00 | 355.00 | 100.00 | 100.00 |
| Speed [mph] | 35.00 | | | 35.00 | | | 40.00 | | | 40.00 | | |
| Grade [%] | 0.00 | | | 0.00 | | | 0.00 | | | 0.00 | | |
| Crosswalk | Yes | | | Yes | | | Yes | | | Yes | | |

**volumes**

| Name | Sierra Avenue | | | Sierra Avenue | | | Valley Boulevard | | | Valley Boulevard | | |
|---|---|---|---|---|---|---|---|---|---|---|---|---|
| Base Volume Input [veh/h] | 315 | 1188 | 907 | 188 | 1325 | 172 | 194 | 486 | 330 | 675 | 492 | 260 |
| Base Volume Adjustment Factor | 1.0000 | 1.0000 | 1.0000 | 1.0000 | 1.0000 | 1.0000 | 1.0000 | 1.0000 | 1.0000 | 1.0000 | 1.0000 | 1.0000 |
| Heavy Vehicles Percentage [%] | 2.00 | 2.00 | 2.00 | 2.00 | 2.00 | 2.00 | 4.00 | 4.00 | 4.00 | 4.00 | 4.00 | 4.00 |
| Growth Rate | 1.00 | 1.00 | 1.00 | 1.00 | 1.00 | 1.00 | 1.00 | 1.00 | 1.00 | 1.00 | 1.00 | 1.00 |
| In-Process Volume [veh/h] | 0 | 0 | 0 | 0 | 0 | 0 | 0 | 0 | 0 | 0 | 0 | 0 |
| Site-Generated Trips [veh/h] | 0 | 0 | 0 | 0 | 0 | 0 | 0 | 0 | 0 | 0 | 0 | 0 |
| Diverted Trips [veh/h] | 0 | 0 | 0 | 0 | 0 | 0 | 0 | 0 | 0 | 0 | 0 | 0 |
| Pass-by Trips [veh/h] | 0 | 0 | 0 | 0 | 0 | 0 | 0 | 0 | 0 | 0 | 0 | 0 |
| Existing Site Adjustment Volume [veh/h] | 0 | 0 | 0 | 0 | 0 | 0 | 0 | 0 | 0 | 0 | 0 | 0 |
| Other Volume [veh/h] | 0 | 0 | 0 | 0 | 0 | 0 | 0 | 0 | 0 | 0 | 0 | 0 |
| Right-Turn on Red Volume [veh/h] | 0 | 0 | 0 | 0 | 0 | 0 | 0 | 0 | 0 | 0 | 0 | 0 |
| Total Hourly Volume [veh/h] | 315 | 1188 | 907 | 188 | 1325 | 172 | 194 | 486 | 330 | 675 | 492 | 260 |
| Peak Hour Factor | 0.9720 | 0.9720 | 0.9720 | 0.9720 | 0.9720 | 0.9720 | 0.9720 | 0.9720 | 0.9720 | 0.9720 | 0.9720 | 0.9720 |
| Other Adjustment Factor | 1.0000 | 1.0000 | 1.0000 | 1.0000 | 1.0000 | 1.0000 | 1.0000 | 1.0000 | 1.0000 | 1.0000 | 1.0000 | 1.0000 |
| Total 15-Minute Volume [veh/h] | 81 | 306 | 233 | 48 | 341 | 44 | 50 | 125 | 85 | 174 | 127 | 67 |
| Total Analysis Volume [veh/h] | 324 | 1222 | 933 | 193 | 1363 | 177 | 200 | 500 | 340 | 694 | 506 | 267 |
| Presence of On-Street Parking | No | | No | No | | No | No | | No | No | | No |
| On-Street Parking Maneuver Rate [/h] | 0 | 0 | 0 | 0 | 0 | 0 | 0 | 0 | 0 | 0 | 0 | 0 |
| Local Bus Stopping Rate [/h] | 0 | 0 | 0 | 0 | 0 | 0 | 0 | 0 | 0 | 0 | 0 | 0 |
| Pedestrian Volume [ped/h] | 0 | | | 0 | | | 0 | | | 0 | | |
| Bicycle Volume [bicycles/h] | 0 | | | 0 | | | 0 | | | 0 | | |

**Intersection Settings**

| | |
|---|---|
| Located in CBD | No |
| Signal Coordination Group | 1 - NS - Sierra |
| Cycle Length [s] | 120 |
| Coordination Type | Time of Day Pattern Coordinated |
| Actuation Type | Fully actuated |
| Offset [s] | 90.0 |
| Offset Reference | LagFO |
| Permissive Mode | SingleBand |
| Lost time [s] | 16.00 |

**Phasing & Timing**

| Control Type | Protecte | Permiss | Overlap | Protecte | Permiss | Permiss | Protecte | Permiss | Overlap | Protecte | Permiss | Overlap |
|---|---|---|---|---|---|---|---|---|---|---|---|---|
| Signal group | 5 | 2 | 2 | 1 | 6 | 0 | 3 | 8 | 8 | 7 | 4 | 4 |
| Auxiliary Signal Groups | | | 2,7 | | | | | | 5,8 | | | 1,4 |
| Lead / Lag | Lead | - | - | Lead | - | - | Lead | - | - | Lead | - | - |
| Minimum Green [s] | 5 | 5 | 5 | 5 | 5 | 0 | 5 | 5 | 5 | 5 | 5 | 5 |
| Maximum Green [s] | 30 | 30 | 30 | 30 | 30 | 0 | 30 | 30 | 30 | 30 | 30 | 30 |
| Amber [s] | 4.1 | 4.1 | 4.1 | 4.1 | 4.1 | 0.0 | 4.4 | 4.4 | 4.4 | 4.4 | 4.4 | 4.4 |
| All red [s] | 1.0 | 1.0 | 1.0 | 1.0 | 1.0 | 0.0 | 1.0 | 1.0 | 1.0 | 1.0 | 1.0 | 1.0 |
| Split [s] | 17 | 55 | 55 | 12 | 50 | 0 | 16 | 23 | 23 | 30 | 37 | 37 |
| Vehicle Extension [s] | 3.0 | 3.0 | 3.0 | 3.0 | 3.0 | 0.0 | 3.0 | 3.0 | 3.0 | 3.0 | 3.0 | 3.0 |
| Walk [s] | 0 | 7 | 7 | 0 | 7 | 0 | 0 | 5 | 5 | 0 | 5 | 5 |
| Pedestrian Clearance [s] | 0 | 24 | 24 | 0 | 26 | 0 | 0 | 10 | 10 | 0 | 10 | 10 |
| I1, Start-Up Lost Time [s] | 2.0 | 2.0 | 2.0 | 2.0 | 2.0 | 0.0 | 2.0 | 2.0 | 2.0 | 2.0 | 2.0 | 2.0 |
| I2, Clearance Lost Time [s] | 3.1 | 3.1 | 3.1 | 3.1 | 3.1 | 0.0 | 3.4 | 3.4 | 3.4 | 3.4 | 3.4 | 3.4 |
| Minimum Recall | No | No | No | No | No | | No | No | No | No | No | No |
| Maximum Recall | No | No | No | No | No | | No | No | No | No | No | No |
| Pedestrian Recall | No | No | No | No | No | | No | No | No | No | No | No |
| Detector Location [ft] | 0.0 | 0.0 | 0.0 | 0.0 | 0.0 | 0.0 | 0.0 | 0.0 | 0.0 | 0.0 | 0.0 | 0.0 |
| Detector Length [ft] | 0.0 | 0.0 | 0.0 | 0.0 | 0.0 | 0.0 | 0.0 | 0.0 | 0.0 | 0.0 | 0.0 | 0.0 |
| I, Upstream Filtering Factor | 1.00 | 1.00 | 1.00 | 1.00 | 1.00 | 1.00 | 1.00 | 1.00 | 1.00 | 1.00 | 1.00 | 1.00 |

**Exclusive Pedestrian Phase**

| | |
|---|---|
| Pedestrian Signal Group | 0 |
| Pedestrian Walk [s] | 0 |
| Pedestrian Clearance [s] | 0 |

**Lane Group Calculations**

| Lane Group | L | C | R | L | C | C | L | C | R | L | C | R |
|---|---|---|---|---|---|---|---|---|---|---|---|---|
| L, Total Lost Time per Cycle [s] | 5.10 | 5.10 | 5.40 | 5.10 | 5.10 | 5.10 | 5.40 | 5.40 | 5.10 | 5.40 | 5.40 | 5.10 |
| l1_p, Permitted Start-Up Lost Time [s] | 0.00 | 0.00 | 0.00 | 0.00 | 0.00 | 0.00 | 0.00 | 0.00 | 0.00 | 0.00 | 0.00 | 0.00 |
| l2, Clearance Lost Time [s] | 3.10 | 3.10 | 0.00 | 3.10 | 3.10 | 3.10 | 3.40 | 3.40 | 0.00 | 3.40 | 3.40 | 0.00 |
| g_i, Effective Green Time [s] | 12 | 50 | 80 | 7 | 45 | 45 | 9 | 18 | 35 | 25 | 33 | 45 |
| g / C, Green / Cycle | 0.10 | 0.42 | 0.66 | 0.06 | 0.37 | 0.37 | 0.08 | 0.15 | 0.29 | 0.21 | 0.28 | 0.38 |
| (v / s)_i Volume / Saturation Flow Rate | 0.09 | 0.34 | 0.59 | 0.06 | 0.29 | 0.29 | 0.06 | 0.14 | 0.22 | 0.21 | 0.15 | 0.17 |
| s, saturation flow rate [veh/h] | 3445 | 3547 | 1583 | 3445 | 3547 | 1755 | 3379 | 3478 | 1553 | 3379 | 3478 | 1553 |
| c, Capacity [veh/h] | 343 | 1477 | 1051 | 201 | 1329 | 658 | 256 | 506 | 451 | 693 | 956 | 587 |
| d1, Uniform Delay [s] | 51.72 | 23.17 | 4.50 | 55.25 | 25.89 | 25.91 | 53.02 | 48.28 | 33.10 | 43.63 | 31.92 | 21.81 |
| k, delay calibration | 0.11 | 0.50 | 0.50 | 0.11 | 0.50 | 0.50 | 0.11 | 0.11 | 0.50 | 0.11 | 0.11 | 0.50 |
| I, Upstream Filtering Factor | 1.00 | 1.00 | 1.00 | 1.00 | 1.00 | 1.00 | 1.00 | 1.00 | 1.00 | 1.00 | 1.00 | 1.00 |
| d2, Incremental Delay [s] | 12.62 | 5.47 | 11.10 | 21.72 | 4.45 | 8.72 | 5.18 | 15.87 | 11.15 | 16.30 | 0.46 | 2.53 |
| d3, Initial Queue Delay [s] | 0.00 | 0.00 | 0.00 | 0.00 | 0.00 | 0.00 | 0.00 | 0.00 | 0.00 | 0.00 | 0.00 | 0.00 |
| Rp, platoon ratio | 1.33 | 1.33 | 1.33 | 1.33 | 1.33 | 1.33 | 1.33 | 1.33 | 1.33 | 1.33 | 1.33 | 1.33 |
| PF, progression factor | 1.00 | 1.00 | 1.00 | 1.00 | 1.00 | 1.00 | 1.00 | 1.00 | 1.00 | 1.00 | 1.00 | 1.00 |

**Lane Group Results**

| | | | | | | | | | | | | |
|---|---|---|---|---|---|---|---|---|---|---|---|---|
| X, volume / capacity | 0.94 | 0.83 | 0.89 | 0.96 | 0.77 | 0.78 | 0.78 | 0.99 | 0.75 | 1.00 | 0.53 | 0.45 |
| d, Delay for Lane Group [s/veh] | 64.34 | 28.64 | 15.60 | 76.97 | 30.34 | 34.63 | 58.20 | 64.15 | 44.25 | 59.93 | 32.38 | 24.34 |
| Lane Group LOS | E | C | B | E | C | C | E | E | D | F | C | C |
| Critical Lane Group | No | No | Yes | Yes | No | No | No | No | Yes | Yes | No | No |
| 50th-Percentile Queue Length [veh] | 5.22 | 13.21 | 6.48 | 3.44 | 11.35 | 12.05 | 3.02 | 8.04 | 9.07 | 11.00 | 5.33 | 4.70 |
| 50th-Percentile Queue Length [ft] | 130.52 | 330.22 | 162.06 | 85.90 | 283.86 | 301.35 | 75.55 | 201.11 | 226.73 | 274.95 | 133.20 | 117.50 |
| 95th-Percentile Queue Length [veh] | 8.97 | 19.17 | 10.66 | 6.18 | 16.88 | 17.75 | 5.44 | 12.70 | 14.01 | 16.45 | 9.11 | 8.26 |
| 95th-Percentile Queue Length [ft] | 224.20 | 479.23 | 266.45 | 154.61 | 422.02 | 443.70 | 136.00 | 317.40 | 350.20 | 411.30 | 227.84 | 206.39 |

**Movement, Approach, & Intersection Results**

| | | | | | | | | | | | | |
|---|---|---|---|---|---|---|---|---|---|---|---|---|
| d_M, Delay for Movement [s/veh] | 64.34 | 28.64 | 15.60 | 76.97 | 31.39 | 34.63 | 58.20 | 64.15 | 44.25 | 59.93 | 32.38 | 24.34 |
| Movement LOS | E | C | B | E | C | C | E | E | D | F | C | C |
| d_A, Approach Delay [s/veh] | 28.40 | | | 36.80 | | | 56.50 | | | 43.95 | | |
| Approach LOS | C | | | D | | | E | | | D | | |
| d_I, Intersection Delay [s/veh] | 38.31 | | | | | | | | | | | |
| Intersection LOS | D | | | | | | | | | | | |
| Intersection V/C | 0.994 | | | | | | | | | | | |

## Sequence

| | | | | | | | | | | | | | | | | |
|---|---|---|---|---|---|---|---|---|---|---|---|---|---|---|---|---|
| Ring 1 | 1 | 2 | 3 | 4 | - | - | - | - | - | - | - | - | - | - | - | - |
| Ring 2 | 5 | 6 | 7 | 8 | - | - | - | - | - | - | - | - | - | - | - | - |
| Ring 3 | - | - | - | - | - | - | - | - | - | - | - | - | - | - | - | - |
| Ring 4 | - | - | - | - | - | - | - | - | - | - | - | - | - | - | - | - |

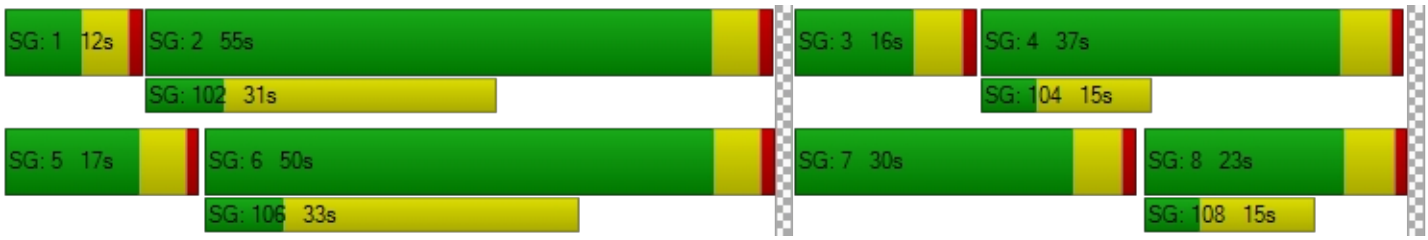

**Intersection Level Of Service Report**
**Intersection 3: Sierra Ave (NS) / I-10 Ramps (EW)**

| | | | |
|---|---|---|---|
| Control Type: | Signalized | Delay (sec / veh): | 28.1 |
| Analysis Method: | HCM 2010 | Level Of Service: | C |
| Analysis Period: | 15 minutes | Volume to Capacity (v/c): | 0.819 |

**Intersection Setup**

| Name | Sierra Avenue | | | Sierra Avenue | | | I-10 Ramps | | | | | |
|---|---|---|---|---|---|---|---|---|---|---|---|---|
| Approach | Northbound | | | Southbound | | | Eastbound | | | Westbound | | |
| Lane Configuration | | | | | | | | | | | | |
| Turning Movement | Left | Thru | Right | Left | Thru | Right | Left | Thru | Right | Left | Thru | Right |
| Lane Width [ft] | 12.00 | 12.00 | 12.00 | 12.00 | 12.00 | 12.00 | 12.00 | 12.00 | 12.00 | 12.00 | 12.00 | 12.00 |
| No. of Lanes in Pocket | 2 | 0 | 0 | 2 | 0 | 0 | 1 | 0 | 0 | 0 | 0 | 1 |
| Pocket Length [ft] | 540.00 | 100.00 | 100.00 | 295.00 | 100.00 | 100.00 | 430.00 | 100.00 | 100.00 | 100.00 | 100.00 | 520.00 |
| Speed [mph] | 40.00 | | | 35.00 | | | 30.00 | | | 30.00 | | |
| Grade [%] | 0.00 | | | 0.00 | | | 0.00 | | | 0.00 | | |
| Crosswalk | No | | | No | | | Yes | | | Yes | | |

**volumes**

| Name | Sierra Avenue | | | Sierra Avenue | | | I-10 Ramps | | | | | |
|---|---|---|---|---|---|---|---|---|---|---|---|---|
| Base Volume Input [veh/h] | 369 | 1078 | 653 | 636 | 1022 | 878 | 767 | 0 | 472 | 460 | 0 | 544 |
| Base Volume Adjustment Factor | 1.0000 | 1.0000 | 1.0000 | 1.0000 | 1.0000 | 1.0000 | 1.0000 | 1.0000 | 1.0000 | 1.0000 | 1.0000 | 1.0000 |
| Heavy Vehicles Percentage [%] | 2.00 | 2.00 | 2.00 | 2.00 | 2.00 | 2.00 | 2.00 | 2.00 | 2.00 | 2.00 | 2.00 | 2.00 |
| Growth Rate | 1.00 | 1.00 | 1.00 | 1.00 | 1.00 | 1.00 | 1.00 | 1.00 | 1.00 | 1.00 | 1.00 | 1.00 |
| In-Process Volume [veh/h] | 0 | 0 | 0 | 0 | 0 | 0 | 0 | 0 | 0 | 0 | 0 | 0 |
| Site-Generated Trips [veh/h] | 0 | 0 | 0 | 0 | 0 | 0 | 0 | 0 | 0 | 0 | 0 | 0 |
| Diverted Trips [veh/h] | 0 | 0 | 0 | 0 | 0 | 0 | 0 | 0 | 0 | 0 | 0 | 0 |
| Pass-by Trips [veh/h] | 0 | 0 | 0 | 0 | 0 | 0 | 0 | 0 | 0 | 0 | 0 | 0 |
| Existing Site Adjustment Volume [veh/h] | 0 | 0 | 0 | 0 | 0 | 0 | 0 | 0 | 0 | 0 | 0 | 0 |
| Other Volume [veh/h] | 0 | 0 | 0 | 0 | 0 | 0 | 0 | 0 | 0 | 0 | 0 | 0 |
| Right-Turn on Red Volume [veh/h] | 0 | 0 | 0 | 0 | 0 | 0 | 0 | 0 | 0 | 0 | 0 | 0 |
| Total Hourly Volume [veh/h] | 369 | 1078 | 653 | 636 | 1022 | 878 | 767 | 0 | 472 | 460 | 0 | 544 |
| Peak Hour Factor | 0.9830 | 0.9830 | 0.9830 | 0.9830 | 0.9830 | 0.9830 | 0.9830 | 1.0000 | 0.9830 | 0.9830 | 1.0000 | 0.9830 |
| Other Adjustment Factor | 1.0000 | 1.0000 | 1.0000 | 1.0000 | 1.0000 | 1.0000 | 1.0000 | 1.0000 | 1.0000 | 1.0000 | 1.0000 | 1.0000 |
| Total 15-Minute Volume [veh/h] | 94 | 274 | 166 | 162 | 260 | 223 | 195 | 0 | 120 | 117 | 0 | 138 |
| Total Analysis Volume [veh/h] | 375 | 1097 | 664 | 647 | 1040 | 893 | 780 | 0 | 480 | 468 | 0 | 553 |
| Presence of On-Street Parking | No | | No | No | | No | No | | No | No | | No |
| On-Street Parking Maneuver Rate [/h] | 0 | 0 | 0 | 0 | 0 | 0 | 0 | 0 | 0 | 0 | 0 | 0 |
| Local Bus Stopping Rate [/h] | 0 | 0 | 0 | 0 | 0 | 0 | 0 | 0 | 0 | 0 | 0 | 0 |
| Pedestrian Volume [ped/h] | 0 | | | 0 | | | 0 | | | 0 | | |
| Bicycle Volume [bicycles/h] | 0 | | | 0 | | | 0 | | | 0 | | |

**Intersection Settings**

| | |
|---|---|
| Located in CBD | No |
| Signal Coordination Group | 1 - NS - Sierra |
| Cycle Length [s] | 120 |
| Coordination Type | Time of Day Pattern Coordinated |
| Actuation Type | Fully actuated |
| Offset [s] | 111.0 |
| Offset Reference | LagFO |
| Permissive Mode | SingleBand |
| Lost time [s] | 12.00 |

**Phasing & Timing**

| Control Type | Permiss | Permiss | Overlap | Permiss | Permiss | Overlap | Permiss | Permiss | Overlap | Permiss | Permiss | Overlap |
|---|---|---|---|---|---|---|---|---|---|---|---|---|
| Signal group | 2 | 2 | 2 | 6 | 6 | 6 | 3 | 0 | 3 | 7 | 0 | 7 |
| Auxiliary Signal Groups | | | 2,3,6,7 | | | 2,3,6,7 | | | 2,3,6 | | | 2,6,7 |
| Lead / Lag | Lag | - | - | Lag | - | - | Lead | - | - | Lead | - | - |
| Minimum Green [s] | 5 | 5 | 5 | 5 | 5 | 5 | 5 | 0 | 5 | 5 | 0 | 5 |
| Maximum Green [s] | 30 | 30 | 30 | 30 | 30 | 30 | 30 | 0 | 30 | 30 | 0 | 30 |
| Amber [s] | 4.4 | 4.4 | 4.4 | 4.1 | 4.1 | 4.1 | 3.7 | 0.0 | 3.7 | 3.7 | 0.0 | 3.7 |
| All red [s] | 3.0 | 3.0 | 3.0 | 3.0 | 3.0 | 3.0 | 3.0 | 0.0 | 3.0 | 3.0 | 0.0 | 3.0 |
| Split [s] | 36 | 36 | 36 | 43 | 43 | 43 | 41 | 0 | 41 | 41 | 0 | 41 |
| Vehicle Extension [s] | 3.0 | 3.0 | 3.0 | 3.0 | 3.0 | 3.0 | 3.0 | 0.0 | 3.0 | 3.0 | 0.0 | 3.0 |
| Walk [s] | 7 | 7 | 7 | 7 | 7 | 7 | 7 | 0 | 7 | 7 | 0 | 7 |
| Pedestrian Clearance [s] | 15 | 15 | 15 | 15 | 15 | 15 | 15 | 0 | 15 | 15 | 0 | 15 |
| I1, Start-Up Lost Time [s] | 2.0 | 2.0 | 2.0 | 2.0 | 2.0 | 2.0 | 2.0 | 0.0 | 2.0 | 2.0 | 0.0 | 2.0 |
| I2, Clearance Lost Time [s] | 5.4 | 5.4 | 5.4 | 5.1 | 5.1 | 5.1 | 4.7 | 0.0 | 4.7 | 4.7 | 0.0 | 4.7 |
| Minimum Recall | | No | No | | No | No | No | | No | No | | No |
| Maximum Recall | | No | No | | No | No | No | | No | No | | No |
| Pedestrian Recall | | No | No | | No | No | No | | No | No | | No |
| Detector Location [ft] | 0.0 | 0.0 | 0.0 | 0.0 | 0.0 | 0.0 | 0.0 | 0.0 | 0.0 | 0.0 | 0.0 | 0.0 |
| Detector Length [ft] | 0.0 | 0.0 | 0.0 | 0.0 | 0.0 | 0.0 | 0.0 | 0.0 | 0.0 | 0.0 | 0.0 | 0.0 |
| I, Upstream Filtering Factor | 1.00 | 1.00 | 1.00 | 1.00 | 1.00 | 1.00 | 1.00 | 1.00 | 1.00 | 1.00 | 1.00 | 1.00 |

**Exclusive Pedestrian Phase**

| | |
|---|---|
| Pedestrian Signal Group | 0 |
| Pedestrian Walk [s] | 0 |
| Pedestrian Clearance [s] | 0 |

**Lane Group Calculations**

| Lane Group | L | C | R | L | C | R | L | R | L | R |
|---|---|---|---|---|---|---|---|---|---|---|
| L, Total Lost Time per Cycle [s] | 7.40 | 7.40 | 7.10 | 7.10 | 7.10 | 7.10 | 6.70 | 7.10 | 6.70 | 7.10 |
| l1_p, Permitted Start-Up Lost Time [s] | 2.00 | 0.00 | 0.00 | 2.00 | 0.00 | 0.00 | 2.00 | 0.00 | 2.00 | 0.00 |
| l2, Clearance Lost Time [s] | 5.40 | 5.40 | 0.00 | 5.10 | 5.10 | 0.00 | 4.70 | 5.40 | 4.70 | 0.00 |
| g_i, Effective Green Time [s] | 32 | 32 | 140 | 32 | 32 | 140 | 34 | 145 | 34 | 105 |
| g / C, Green / Cycle | 0.27 | 0.27 | 1.16 | 0.27 | 0.27 | 1.16 | 0.29 | 1.21 | 0.29 | 0.88 |
| (v / s)_i Volume / Saturation Flow Rate | 0.14 | 0.22 | 0.42 | 0.24 | 0.20 | 0.56 | 0.28 | 0.30 | 0.17 | 0.35 |
| s, saturation flow rate [veh/h] | 2741 | 5074 | 1583 | 2741 | 5074 | 1583 | 2741 | 1583 | 2741 | 1583 |
| c, Capacity [veh/h] | 743 | 1358 | 1843 | 754 | 1370 | 1843 | 792 | 1913 | 792 | 1392 |
| d1, Uniform Delay [s] | 34.12 | 35.73 | 0.00 | 38.34 | 34.88 | 0.00 | 44.87 | 0.00 | 38.79 | 0.67 |
| k, delay calibration | 0.50 | 0.50 | 0.50 | 0.50 | 0.50 | 0.50 | 0.11 | 0.50 | 0.11 | 0.50 |
| I, Upstream Filtering Factor | 1.00 | 1.00 | 1.00 | 1.00 | 1.00 | 1.00 | 1.00 | 1.00 | 1.00 | 1.00 |
| d2, Incremental Delay [s] | 2.44 | 5.26 | 0.55 | 12.13 | 3.99 | 0.91 | 11.74 | 0.31 | 0.71 | 0.85 |
| d3, Initial Queue Delay [s] | 0.00 | 0.00 | 0.00 | 0.00 | 0.00 | 0.00 | 0.00 | 0.00 | 0.00 | 0.00 |
| Rp, platoon ratio | 1.33 | 1.33 | 1.01 | 1.33 | 1.33 | 1.01 | 1.00 | 1.00 | 1.00 | 1.00 |
| PF, progression factor | 1.00 | 1.00 | 1.00 | 1.00 | 1.00 | 1.00 | 1.00 | 1.00 | 1.00 | 1.00 |

**Lane Group Results**

| | | | | | | | | | | |
|---|---|---|---|---|---|---|---|---|---|---|
| X, volume / capacity | 0.50 | 0.81 | 0.36 | 0.86 | 0.76 | 0.48 | 0.98 | 0.25 | 0.59 | 0.40 |
| d, Delay for Lane Group [s/veh] | 36.56 | 40.99 | 0.55 | 50.47 | 38.88 | 0.91 | 56.61 | 0.31 | 39.50 | 1.53 |
| Lane Group LOS | D | D | A | D | D | A | E | A | D | A |
| Critical Lane Group | No | Yes | No | Yes | No | No | Yes | No | No | No |
| 50th-Percentile Queue Length [veh] | 4.33 | 9.38 | 0.28 | 9.73 | 8.69 | 0.47 | 13.02 | 0.17 | 6.15 | 0.33 |
| 50th-Percentile Queue Length [ft] | 108.26 | 234.47 | 7.02 | 243.14 | 217.33 | 11.70 | 325.45 | 4.18 | 153.71 | 8.22 |
| 95th-Percentile Queue Length [veh] | 7.74 | 14.40 | 0.51 | 14.84 | 13.53 | 0.84 | 18.94 | 0.30 | 10.21 | 0.59 |
| 95th-Percentile Queue Length [ft] | 193.59 | 360.03 | 12.64 | 371.00 | 338.21 | 21.06 | 473.39 | 7.53 | 255.37 | 14.79 |

**Movement, Approach, & Intersection Results**

| | | | | | | | | | | | | |
|---|---|---|---|---|---|---|---|---|---|---|---|---|
| d_M, Delay for Movement [s/veh] | 36.56 | 40.99 | 0.55 | 50.47 | 38.88 | 0.91 | 56.61 | 0.00 | 0.31 | 39.50 | 0.00 | 1.53 |
| Movement LOS | D | D | A | D | D | A | E | | A | D | | A |
| d_A, Approach Delay [s/veh] | 27.64 | | | 28.64 | | | 35.16 | | | 18.93 | | |
| Approach LOS | C | | | C | | | D | | | B | | |
| d_I, Intersection Delay [s/veh] | 28.09 | | | | | | | | | | | |
| Intersection LOS | C | | | | | | | | | | | |
| Intersection V/C | 0.819 | | | | | | | | | | | |

## Sequence

| | | | | | | | | | | | | | | | | |
|---|---|---|---|---|---|---|---|---|---|---|---|---|---|---|---|---|
| Ring 1 | 2 | 6 | 3 | - | - | - | - | - | - | - | - | - | - | - | - | - |
| Ring 2 | - | - | 7 | - | - | - | - | - | - | - | - | - | - | - | - | - |
| Ring 3 | - | - | - | - | - | - | - | - | - | - | - | - | - | - | - | - |
| Ring 4 | - | - | - | - | - | - | - | - | - | - | - | - | - | - | - | - |

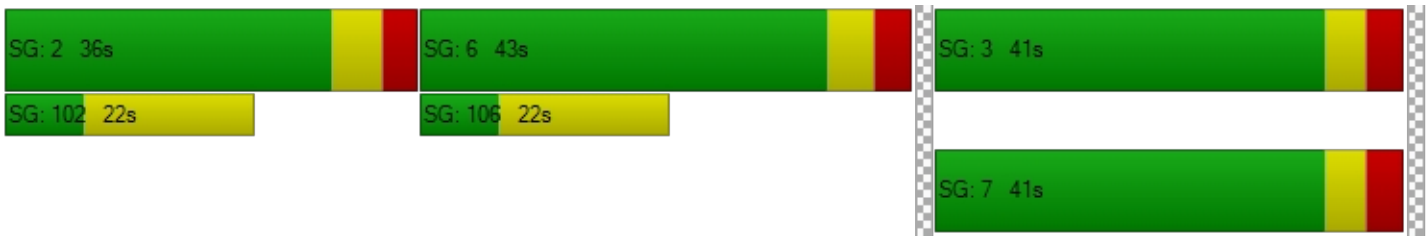

**Intersection Level Of Service Report**
**Intersection 4: Sierra Ave (NS) / Slover Ave (EW)**

| | | | |
|---|---|---|---|
| Control Type: | Signalized | Delay (sec / veh): | 34.7 |
| Analysis Method: | HCM 2010 | Level Of Service: | C |
| Analysis Period: | 15 minutes | Volume to Capacity (v/c): | 0.781 |

**Intersection Setup**

| Name | Sierra Avenue | | | Sierra Avenue | | | Slover Avenue | | | Slover Avenue | | |
|---|---|---|---|---|---|---|---|---|---|---|---|---|
| Approach | Northbound | | | Southbound | | | Eastbound | | | Westbound | | |
| Lane Configuration | | | | | | | | | | | | |
| Turning Movement | Left | Thru | Right | Left | Thru | Right | Left | Thru | Right | Left | Thru | Right |
| Lane Width [ft] | 12.00 | 12.00 | 12.00 | 12.00 | 12.00 | 12.00 | 12.00 | 12.00 | 12.00 | 12.00 | 12.00 | 12.00 |
| No. of Lanes in Pocket | 2 | 0 | 0 | 2 | 0 | 0 | 2 | 0 | 1 | 2 | 0 | 1 |
| Pocket Length [ft] | 195.00 | 100.00 | 100.00 | 615.00 | 100.00 | 100.00 | 290.00 | 100.00 | 290.00 | 230.00 | 100.00 | 300.00 |
| Speed [mph] | 50.00 | | | 40.00 | | | 45.00 | | | 45.00 | | |
| Grade [%] | 0.00 | | | 0.00 | | | 0.00 | | | 0.00 | | |
| Crosswalk | Yes | | | Yes | | | Yes | | | Yes | | |

**volumes**

| Name | Sierra Avenue | | | Sierra Avenue | | | Slover Avenue | | | Slover Avenue | | |
|---|---|---|---|---|---|---|---|---|---|---|---|---|
| Base Volume Input [veh/h] | 144 | 1047 | 199 | 668 | 1001 | 140 | 302 | 430 | 112 | 234 | 256 | 784 |
| Base Volume Adjustment Factor | 1.0000 | 1.0000 | 1.0000 | 1.0000 | 1.0000 | 1.0000 | 1.0000 | 1.0000 | 1.0000 | 1.0000 | 1.0000 | 1.0000 |
| Heavy Vehicles Percentage [%] | 2.00 | 2.00 | 2.00 | 2.00 | 2.00 | 2.00 | 2.00 | 2.00 | 2.00 | 2.00 | 2.00 | 2.00 |
| Growth Rate | 1.00 | 1.00 | 1.00 | 1.00 | 1.00 | 1.00 | 1.00 | 1.00 | 1.00 | 1.00 | 1.00 | 1.00 |
| In-Process Volume [veh/h] | 0 | 0 | 0 | 0 | 0 | 0 | 0 | 0 | 0 | 0 | 0 | 0 |
| Site-Generated Trips [veh/h] | 0 | 0 | 0 | 0 | 0 | 0 | 0 | 0 | 0 | 0 | 0 | 0 |
| Diverted Trips [veh/h] | 0 | 0 | 0 | 0 | 0 | 0 | 0 | 0 | 0 | 0 | 0 | 0 |
| Pass-by Trips [veh/h] | 0 | 0 | 0 | 0 | 0 | 0 | 0 | 0 | 0 | 0 | 0 | 0 |
| Existing Site Adjustment Volume [veh/h] | 0 | 0 | 0 | 0 | 0 | 0 | 0 | 0 | 0 | 0 | 0 | 0 |
| Other Volume [veh/h] | 0 | 0 | 0 | 0 | 0 | 0 | 0 | 0 | 0 | 0 | 0 | 0 |
| Right-Turn on Red Volume [veh/h] | 0 | 0 | 0 | 0 | 0 | 0 | 0 | 0 | 0 | 0 | 0 | 0 |
| Total Hourly Volume [veh/h] | 144 | 1047 | 199 | 668 | 1001 | 140 | 302 | 430 | 112 | 234 | 256 | 784 |
| Peak Hour Factor | 0.9580 | 0.9580 | 0.9580 | 0.9580 | 0.9580 | 0.9580 | 0.9580 | 0.9580 | 0.9580 | 0.9580 | 0.9580 | 0.9580 |
| Other Adjustment Factor | 1.0000 | 1.0000 | 1.0000 | 1.0000 | 1.0000 | 1.0000 | 1.0000 | 1.0000 | 1.0000 | 1.0000 | 1.0000 | 1.0000 |
| Total 15-Minute Volume [veh/h] | 38 | 273 | 52 | 174 | 261 | 37 | 79 | 112 | 29 | 61 | 67 | 205 |
| Total Analysis Volume [veh/h] | 150 | 1093 | 208 | 697 | 1045 | 146 | 315 | 449 | 117 | 244 | 267 | 818 |
| Presence of On-Street Parking | No | | No | No | | No | No | | No | No | | No |
| On-Street Parking Maneuver Rate [/h] | 0 | 0 | 0 | 0 | 0 | 0 | 0 | 0 | 0 | 0 | 0 | 0 |
| Local Bus Stopping Rate [/h] | 0 | 0 | 0 | 0 | 0 | 0 | 0 | 0 | 0 | 0 | 0 | 0 |
| Pedestrian Volume [ped/h] | 0 | | | 0 | | | 0 | | | 0 | | |
| Bicycle Volume [bicycles/h] | 0 | | | 0 | | | 0 | | | 0 | | |

**Intersection Settings**

| | |
|---|---|
| Located in CBD | No |
| Signal Coordination Group | 1 - NS - Sierra |
| Cycle Length [s] | 120 |
| Coordination Type | Time of Day Pattern Coordinated |
| Actuation Type | Fully actuated |
| Offset [s] | 42.0 |
| Offset Reference | LagFO |
| Permissive Mode | SingleBand |
| Lost time [s] | 16.00 |

**Phasing & Timing**

| Control Type | Protecte | Permiss | Permiss | Protecte | Permiss | Permiss | Protecte | Permiss | Permiss | Protecte | Permiss | Overlap |
|---|---|---|---|---|---|---|---|---|---|---|---|---|
| Signal group | 5 | 2 | 0 | 1 | 6 | 0 | 3 | 8 | 0 | 7 | 4 | 4 |
| Auxiliary Signal Groups | | | | | | | | | | | | 1,4 |
| Lead / Lag | Lead | - | - | Lead | - | - | Lead | - | - | Lead | - | - |
| Minimum Green [s] | 5 | 5 | 0 | 5 | 5 | 0 | 5 | 5 | 0 | 5 | 5 | 5 |
| Maximum Green [s] | 30 | 30 | 0 | 30 | 30 | 0 | 30 | 30 | 0 | 30 | 30 | 30 |
| Amber [s] | 5.2 | 5.2 | 0.0 | 4.4 | 4.4 | 0.0 | 4.8 | 4.8 | 0.0 | 4.8 | 4.8 | 4.8 |
| All red [s] | 1.0 | 1.0 | 0.0 | 1.0 | 1.0 | 0.0 | 1.0 | 1.0 | 0.0 | 1.0 | 1.0 | 1.0 |
| Split [s] | 14 | 45 | 0 | 35 | 66 | 0 | 19 | 24 | 0 | 16 | 21 | 21 |
| Vehicle Extension [s] | 3.0 | 3.0 | 0.0 | 3.0 | 3.0 | 0.0 | 3.0 | 3.0 | 0.0 | 3.0 | 3.0 | 3.0 |
| Walk [s] | 0 | 7 | 0 | 0 | 7 | 0 | 0 | 5 | 0 | 0 | 5 | 5 |
| Pedestrian Clearance [s] | 0 | 22 | 0 | 0 | 20 | 0 | 0 | 10 | 0 | 0 | 10 | 10 |
| I1, Start-Up Lost Time [s] | 2.0 | 2.0 | 0.0 | 2.0 | 2.0 | 0.0 | 2.0 | 2.0 | 0.0 | 2.0 | 2.0 | 2.0 |
| I2, Clearance Lost Time [s] | 4.2 | 4.2 | 0.0 | 3.4 | 3.4 | 0.0 | 3.8 | 3.8 | 0.0 | 3.8 | 3.8 | 3.8 |
| Minimum Recall | No | No | | No | No | | No | No | | No | No | No |
| Maximum Recall | No | No | | No | No | | No | No | | No | No | No |
| Pedestrian Recall | No | No | | No | No | | No | No | | No | No | No |
| Detector Location [ft] | 0.0 | 0.0 | 0.0 | 0.0 | 0.0 | 0.0 | 0.0 | 0.0 | 0.0 | 0.0 | 0.0 | 0.0 |
| Detector Length [ft] | 0.0 | 0.0 | 0.0 | 0.0 | 0.0 | 0.0 | 0.0 | 0.0 | 0.0 | 0.0 | 0.0 | 0.0 |
| I, Upstream Filtering Factor | 1.00 | 1.00 | 1.00 | 1.00 | 1.00 | 1.00 | 1.00 | 1.00 | 1.00 | 1.00 | 1.00 | 1.00 |

**Exclusive Pedestrian Phase**

| | |
|---|---|
| Pedestrian Signal Group | 0 |
| Pedestrian Walk [s] | 0 |
| Pedestrian Clearance [s] | 0 |

**Lane Group Calculations**

| Lane Group | L | C | R | L | C | C | L | C | R | L | C | R |
|---|---|---|---|---|---|---|---|---|---|---|---|---|
| L, Total Lost Time per Cycle [s] | 6.20 | 6.20 | 6.20 | 5.40 | 5.40 | 5.40 | 5.80 | 5.80 | 5.80 | 5.80 | 5.80 | 5.40 |
| l1_p, Permitted Start-Up Lost Time [s] | 0.00 | 0.00 | 0.00 | 0.00 | 0.00 | 0.00 | 0.00 | 0.00 | 0.00 | 0.00 | 0.00 | 0.00 |
| l2, Clearance Lost Time [s] | 4.20 | 4.20 | 4.20 | 3.40 | 3.40 | 3.40 | 3.80 | 3.80 | 3.80 | 3.80 | 3.80 | 0.00 |
| g_i, Effective Green Time [s] | 7 | 42 | 42 | 27 | 62 | 62 | 13 | 17 | 17 | 10 | 14 | 48 |
| g / C, Green / Cycle | 0.06 | 0.35 | 0.35 | 0.23 | 0.52 | 0.52 | 0.11 | 0.14 | 0.14 | 0.09 | 0.12 | 0.40 |
| (v / s)_i Volume / Saturation Flow Rate | 0.04 | 0.22 | 0.13 | 0.20 | 0.22 | 0.23 | 0.09 | 0.13 | 0.07 | 0.07 | 0.08 | 0.29 |
| s, saturation flow rate [veh/h] | 3445 | 5074 | 1583 | 3445 | 3547 | 1749 | 3445 | 3547 | 1583 | 3445 | 3547 | 2803 |
| c, Capacity [veh/h] | 208 | 1777 | 554 | 789 | 1841 | 907 | 372 | 502 | 224 | 297 | 424 | 1113 |
| d1, Uniform Delay [s] | 54.27 | 25.98 | 23.53 | 40.20 | 10.73 | 10.74 | 52.62 | 50.71 | 47.83 | 54.01 | 50.37 | 30.86 |
| k, delay calibration | 0.11 | 0.50 | 0.50 | 0.11 | 0.50 | 0.50 | 0.11 | 0.11 | 0.11 | 0.11 | 0.11 | 0.13 |
| I, Upstream Filtering Factor | 1.00 | 1.00 | 1.00 | 1.00 | 1.00 | 1.00 | 1.00 | 1.00 | 1.00 | 1.00 | 1.00 | 1.00 |
| d2, Incremental Delay [s] | 4.67 | 1.60 | 1.94 | 3.48 | 0.74 | 1.52 | 5.34 | 5.87 | 1.88 | 5.65 | 1.54 | 1.18 |
| d3, Initial Queue Delay [s] | 0.00 | 0.00 | 0.00 | 0.00 | 0.00 | 0.00 | 0.00 | 0.00 | 0.00 | 0.00 | 0.00 | 0.00 |
| Rp, platoon ratio | 1.33 | 1.33 | 1.33 | 1.33 | 1.33 | 1.33 | 1.00 | 1.00 | 1.00 | 1.00 | 1.00 | 1.00 |
| PF, progression factor | 1.00 | 1.00 | 1.00 | 1.00 | 1.00 | 1.00 | 1.00 | 1.00 | 1.00 | 1.00 | 1.00 | 1.00 |

**Lane Group Results**

| | | | | | | | | | | | | |
|---|---|---|---|---|---|---|---|---|---|---|---|---|
| X, volume / capacity | 0.72 | 0.62 | 0.38 | 0.88 | 0.43 | 0.43 | 0.85 | 0.89 | 0.52 | 0.82 | 0.63 | 0.74 |
| d, Delay for Lane Group [s/veh] | 58.94 | 27.58 | 25.47 | 43.68 | 11.47 | 12.26 | 57.96 | 56.58 | 49.71 | 59.66 | 51.91 | 32.04 |
| Lane Group LOS | E | C | C | D | B | B | E | E | D | E | D | C |
| Critical Lane Group | No | Yes | No | Yes | No | No | Yes | No | No | No | No | Yes |
| 50th-Percentile Queue Length [veh] | 2.25 | 6.77 | 3.72 | 9.32 | 3.97 | 4.13 | 4.82 | 6.85 | 3.28 | 3.77 | 3.81 | 9.73 |
| 50th-Percentile Queue Length [ft] | 56.23 | 169.24 | 92.97 | 233.00 | 99.20 | 103.27 | 120.48 | 171.19 | 82.04 | 94.25 | 95.32 | 243.30 |
| 95th-Percentile Queue Length [veh] | 4.05 | 11.04 | 6.69 | 14.33 | 7.14 | 7.44 | 8.42 | 11.14 | 5.91 | 6.79 | 6.86 | 14.85 |
| 95th-Percentile Queue Length [ft] | 101.22 | 275.92 | 167.35 | 358.17 | 178.55 | 185.89 | 210.49 | 278.48 | 147.68 | 169.65 | 171.57 | 371.21 |

**Movement, Approach, & Intersection Results**

| | | | | | | | | | | | | |
|---|---|---|---|---|---|---|---|---|---|---|---|---|
| d_M, Delay for Movement [s/veh] | 58.94 | 27.58 | 25.47 | 43.68 | 11.66 | 12.26 | 57.96 | 56.58 | 49.71 | 59.66 | 51.91 | 32.04 |
| Movement LOS | E | C | C | D | B | B | E | E | D | E | D | C |
| d_A, Approach Delay [s/veh] | 30.52 | | | 23.53 | | | 56.16 | | | 41.10 | | |
| Approach LOS | C | | | C | | | E | | | D | | |
| d_I, Intersection Delay [s/veh] | 34.75 | | | | | | | | | | | |
| Intersection LOS | C | | | | | | | | | | | |
| Intersection V/C | 0.781 | | | | | | | | | | | |

## Sequence

| | | | | | | | | | | | | | | | | |
|---|---|---|---|---|---|---|---|---|---|---|---|---|---|---|---|---|
| Ring 1 | 1 | 2 | 3 | 4 | - | - | - | - | - | - | - | - | - | - | - | - |
| Ring 2 | 5 | 6 | 7 | 8 | - | - | - | - | - | - | - | - | - | - | - | - |
| Ring 3 | - | - | - | - | - | - | - | - | - | - | - | - | - | - | - | - |
| Ring 4 | - | - | - | - | - | - | - | - | - | - | - | - | - | - | - | - |

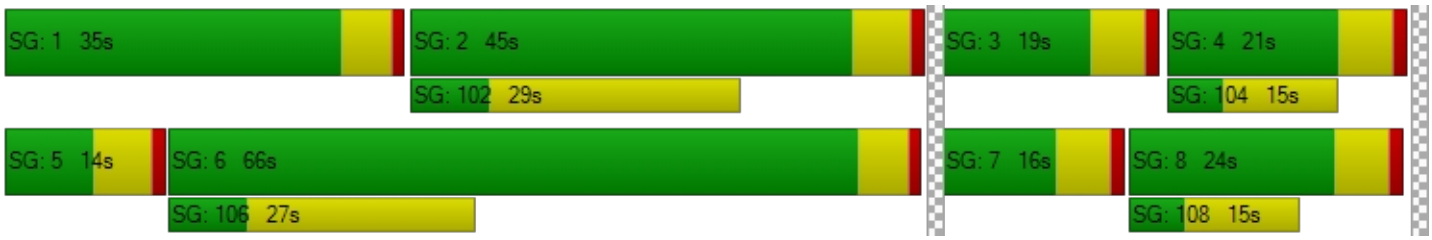

**Intersection Level Of Service Report**
**Intersection 5: Palmetto Ave (NS) / Valley Blvd (EW)**

| | | | |
|---|---|---|---|
| Control Type: | Signalized | Delay (sec / veh): | 17.0 |
| Analysis Method: | HCM 2010 | Level Of Service: | B |
| Analysis Period: | 15 minutes | Volume to Capacity (v/c): | 0.526 |

**Intersection Setup**

| Name | Palmetto Avenue | | Valley Boulevard | | Valley Boulevard | |
|---|---|---|---|---|---|---|
| Approach | Southbound | | Eastbound | | Westbound | |
| Lane Configuration | | | | | | |
| Turning Movement | Left | Right | Left | Thru | Thru | Right |
| Lane Width [ft] | 12.00 | 12.00 | 12.00 | 12.00 | 12.00 | 12.00 |
| No. of Lanes in Pocket | 0 | 0 | 1 | 0 | 0 | 0 |
| Pocket Length [ft] | 100.00 | 100.00 | 150.00 | 100.00 | 100.00 | 100.00 |
| Speed [mph] | 35.00 | | 40.00 | | 40.00 | |
| Grade [%] | 0.00 | | 0.00 | | 0.00 | |
| Crosswalk | Yes | | Yes | | No | |

**volumes**

| Name | Palmetto Avenue | | Valley Boulevard | | Valley Boulevard | |
|---|---|---|---|---|---|---|
| Base Volume Input [veh/h] | 63 | 156 | 319 | 1037 | 560 | 70 |
| Base Volume Adjustment Factor | 1.0000 | 1.0000 | 1.0000 | 1.0000 | 1.0000 | 1.0000 |
| Heavy Vehicles Percentage [%] | 2.00 | 2.00 | 4.00 | 4.00 | 4.00 | 4.00 |
| Growth Rate | 1.00 | 1.00 | 1.00 | 1.00 | 1.00 | 1.00 |
| In-Process Volume [veh/h] | 0 | 0 | 0 | 0 | 0 | 0 |
| Site-Generated Trips [veh/h] | 0 | 0 | 0 | 0 | 0 | 0 |
| Diverted Trips [veh/h] | 0 | 0 | 0 | 0 | 0 | 0 |
| Pass-by Trips [veh/h] | 0 | 0 | 0 | 0 | 0 | 0 |
| Existing Site Adjustment Volume [veh/h] | 0 | 0 | 0 | 0 | 0 | 0 |
| Other Volume [veh/h] | 0 | 0 | 0 | 0 | 0 | 0 |
| Right-Turn on Red Volume [veh/h] | 0 | 0 | 0 | 0 | 0 | 0 |
| Total Hourly Volume [veh/h] | 63 | 156 | 319 | 1037 | 560 | 70 |
| Peak Hour Factor | 0.9270 | 0.9270 | 0.9270 | 0.9270 | 0.9270 | 0.9270 |
| Other Adjustment Factor | 1.0000 | 1.0000 | 1.0000 | 1.0000 | 1.0000 | 1.0000 |
| Total 15-Minute Volume [veh/h] | 17 | 42 | 86 | 280 | 151 | 19 |
| Total Analysis Volume [veh/h] | 68 | 168 | 344 | 1119 | 604 | 76 |
| Presence of On-Street Parking | No | No | No | No | No | No |
| On-Street Parking Maneuver Rate [/h] | 0 | 0 | 0 | 0 | 0 | 0 |
| Local Bus Stopping Rate [/h] | 0 | 0 | 0 | 0 | 0 | 0 |
| Pedestrian Volume [ped/h] | 0 | | 0 | | 0 | |
| Bicycle Volume [bicycles/h] | 0 | | 0 | | 0 | |

**Intersection Settings**

| | |
|---|---|
| Located in CBD | No |
| Signal Coordination Group | 3 - EW - Valley |
| Cycle Length [s] | 120 |
| Coordination Type | Time of Day Pattern Coordinated |
| Actuation Type | Fully actuated |
| Offset [s] | 0.0 |
| Offset Reference | LagFO |
| Permissive Mode | SingleBand |
| Lost time [s] | 12.00 |

**Phasing & Timing**

| Control Type | Split | Split | Protected | Permissive | Permissive | Permissive |
|---|---|---|---|---|---|---|
| Signal group | 1 | 0 | 3 | 8 | 4 | 0 |
| Auxiliary Signal Groups | | | | | | |
| Lead / Lag | Lead | - | Lead | - | - | - |
| Minimum Green [s] | 5 | 0 | 5 | 5 | 5 | 0 |
| Maximum Green [s] | 30 | 0 | 30 | 30 | 30 | 0 |
| Amber [s] | 4.1 | 0.0 | 4.4 | 4.4 | 4.4 | 0.0 |
| All red [s] | 1.0 | 0.0 | 1.0 | 1.0 | 1.0 | 0.0 |
| Split [s] | 39 | 0 | 44 | 81 | 37 | 0 |
| Vehicle Extension [s] | 3.0 | 0.0 | 3.0 | 3.0 | 3.0 | 0.0 |
| Walk [s] | 7 | 0 | 0 | 7 | 7 | 0 |
| Pedestrian Clearance [s] | 26 | 0 | 0 | 17 | 17 | 0 |
| I1, Start-Up Lost Time [s] | 2.0 | 0.0 | 2.0 | 2.0 | 2.0 | 0.0 |
| I2, Clearance Lost Time [s] | 3.1 | 0.0 | 3.4 | 3.4 | 3.4 | 0.0 |
| Minimum Recall | No | | No | No | No | |
| Maximum Recall | No | | No | No | No | |
| Pedestrian Recall | No | | No | No | No | |
| Detector Location [ft] | 0.0 | 0.0 | 0.0 | 0.0 | 0.0 | 0.0 |
| Detector Length [ft] | 0.0 | 0.0 | 0.0 | 0.0 | 0.0 | 0.0 |
| I, Upstream Filtering Factor | 1.00 | 1.00 | 1.00 | 1.00 | 1.00 | 1.00 |

**Exclusive Pedestrian Phase**

| | |
|---|---|
| Pedestrian Signal Group | 0 |
| Pedestrian Walk [s] | 0 |
| Pedestrian Clearance [s] | 0 |

**Lane Group Calculations**

| Lane Group | C | L | C | C | C |
|---|---|---|---|---|---|
| L, Total Lost Time per Cycle [s] | 5.10 | 5.40 | 5.40 | 5.40 | 5.40 |
| l1_p, Permitted Start-Up Lost Time [s] | 0.00 | 0.00 | 0.00 | 0.00 | 0.00 |
| l2, Clearance Lost Time [s] | 3.10 | 3.40 | 3.40 | 3.40 | 3.40 |
| g_i, Effective Green Time [s] | 19 | 26 | 90 | 59 | 59 |
| g / C, Green / Cycle | 0.16 | 0.21 | 0.75 | 0.49 | 0.49 |
| (v / s)_i Volume / Saturation Flow Rate | 0.14 | 0.20 | 0.32 | 0.13 | 0.13 |
| s, saturation flow rate [veh/h] | 1634 | 1740 | 3478 | 3478 | 1725 |
| c, Capacity [veh/h] | 265 | 374 | 2610 | 1707 | 846 |
| d1, Uniform Delay [s] | 49.22 | 41.82 | 0.00 | 11.69 | 11.70 |
| k, delay calibration | 0.11 | 0.11 | 0.50 | 0.50 | 0.50 |
| I, Upstream Filtering Factor | 1.00 | 1.00 | 1.00 | 1.00 | 1.00 |
| d2, Incremental Delay [s] | 10.00 | 9.55 | 0.52 | 0.38 | 0.78 |
| d3, Initial Queue Delay [s] | 0.00 | 0.00 | 0.00 | 0.00 | 0.00 |
| Rp, platoon ratio | 1.00 | 1.33 | 1.33 | 1.33 | 1.33 |
| PF, progression factor | 1.00 | 1.00 | 1.00 | 1.00 | 1.00 |

**Lane Group Results**

| | | | | | |
|---|---|---|---|---|---|
| X, volume / capacity | 0.89 | 0.92 | 0.43 | 0.27 | 0.27 |
| d, Delay for Lane Group [s/veh] | 59.21 | 51.36 | 0.52 | 12.07 | 12.48 |
| Lane Group LOS | E | D | A | B | B |
| Critical Lane Group | Yes | Yes | No | No | Yes |
| 50th-Percentile Queue Length [veh] | 7.58 | 10.02 | 0.19 | 2.39 | 2.49 |
| 50th-Percentile Queue Length [ft] | 189.48 | 250.52 | 4.68 | 59.85 | 62.20 |
| 95th-Percentile Queue Length [veh] | 12.09 | 15.21 | 0.34 | 4.31 | 4.48 |
| 95th-Percentile Queue Length [ft] | 302.36 | 380.30 | 8.42 | 107.73 | 111.96 |

**Movement, Approach, & Intersection Results**

| | | | | | | |
|---|---|---|---|---|---|---|
| d_M, Delay for Movement [s/veh] | 59.21 | 59.21 | 51.36 | 0.52 | 12.18 | 12.48 |
| Movement LOS | E | E | D | A | B | B |
| d_A, Approach Delay [s/veh] | 59.21 | | 12.47 | | 12.21 | |
| Approach LOS | E | | B | | B | |
| d_I, Intersection Delay [s/veh] | 17.03 | | | | | |
| Intersection LOS | B | | | | | |
| Intersection V/C | 0.526 | | | | | |

## Sequence

| | | | | | | | | | | | | | | | | |
|---|---|---|---|---|---|---|---|---|---|---|---|---|---|---|---|---|
| Ring 1 | 1 | 3 | 4 | - | - | - | - | - | - | - | - | - | - | - | - | - |
| Ring 2 | - | - | 8 | - | - | - | - | - | - | - | - | - | - | - | - | - |
| Ring 3 | - | - | - | - | - | - | - | - | - | - | - | - | - | - | - | - |
| Ring 4 | - | - | - | - | - | - | - | - | - | - | - | - | - | - | - | - |

**Intersection Level Of Service Report**
**Intersection 6: Alder Ave (NS) / San Bernardino Ave (EW)**

| | | | |
|---|---|---|---|
| Control Type: | Signalized | Delay (sec / veh): | 16.7 |
| Analysis Method: | HCM 2010 | Level Of Service: | B |
| Analysis Period: | 15 minutes | Volume to Capacity (v/c): | 0.474 |

**Intersection Setup**

| Name | Alder Avenue | | | Alder Avenue | | | San Bernardino Avenue | | | San Bernardino Avenue | | |
|---|---|---|---|---|---|---|---|---|---|---|---|---|
| Approach | Northbound | | | Southbound | | | Eastbound | | | Westbound | | |
| Lane Configuration | | | | | | | | | | | | |
| Turning Movement | Left | Thru | Right | Left | Thru | Right | Left | Thru | Right | Left | Thru | Right |
| Lane Width [ft] | 12.00 | 12.00 | 12.00 | 12.00 | 12.00 | 12.00 | 12.00 | 12.00 | 12.00 | 12.00 | 12.00 | 12.00 |
| No. of Lanes in Pocket | 1 | 0 | 0 | 1 | 0 | 0 | 1 | 0 | 0 | 1 | 0 | 0 |
| Pocket Length [ft] | 100.00 | 100.00 | 100.00 | 100.00 | 100.00 | 100.00 | 100.00 | 100.00 | 100.00 | 80.00 | 100.00 | 100.00 |
| Speed [mph] | 40.00 | | | 40.00 | | | 35.00 | | | 35.00 | | |
| Grade [%] | 0.00 | | | 0.00 | | | 0.00 | | | 0.00 | | |
| Crosswalk | Yes | | | Yes | | | Yes | | | Yes | | |

**volumes**

| Name | Alder Avenue | | | Alder Avenue | | | San Bernardino Avenue | | | San Bernardino Avenue | | |
|---|---|---|---|---|---|---|---|---|---|---|---|---|
| Base Volume Input [veh/h] | 35 | 392 | 59 | 29 | 214 | 47 | 76 | 231 | 52 | 29 | 154 | 16 |
| Base Volume Adjustment Factor | 1.0000 | 1.0000 | 1.0000 | 1.0000 | 1.0000 | 1.0000 | 1.0000 | 1.0000 | 1.0000 | 1.0000 | 1.0000 | 1.0000 |
| Heavy Vehicles Percentage [%] | 2.00 | 2.00 | 2.00 | 2.00 | 2.00 | 2.00 | 2.00 | 2.00 | 2.00 | 2.00 | 2.00 | 2.00 |
| Growth Rate | 1.00 | 1.00 | 1.00 | 1.00 | 1.00 | 1.00 | 1.00 | 1.00 | 1.00 | 1.00 | 1.00 | 1.00 |
| In-Process Volume [veh/h] | 0 | 0 | 0 | 0 | 0 | 0 | 0 | 0 | 0 | 0 | 0 | 0 |
| Site-Generated Trips [veh/h] | 0 | 0 | 0 | 0 | 0 | 0 | 0 | 0 | 0 | 0 | 0 | 0 |
| Diverted Trips [veh/h] | 0 | 0 | 0 | 0 | 0 | 0 | 0 | 0 | 0 | 0 | 0 | 0 |
| Pass-by Trips [veh/h] | 0 | 0 | 0 | 0 | 0 | 0 | 0 | 0 | 0 | 0 | 0 | 0 |
| Existing Site Adjustment Volume [veh/h] | 0 | 0 | 0 | 0 | 0 | 0 | 0 | 0 | 0 | 0 | 0 | 0 |
| Other Volume [veh/h] | 0 | 0 | 0 | 0 | 0 | 0 | 0 | 0 | 0 | 0 | 0 | 0 |
| Right-Turn on Red Volume [veh/h] | 0 | 0 | 0 | 0 | 0 | 0 | 0 | 0 | 0 | 0 | 0 | 0 |
| Total Hourly Volume [veh/h] | 35 | 392 | 59 | 29 | 214 | 47 | 76 | 231 | 52 | 29 | 154 | 16 |
| Peak Hour Factor | 0.8530 | 0.8530 | 0.8530 | 0.8530 | 0.8530 | 0.8530 | 0.8530 | 0.8530 | 0.8530 | 0.8530 | 0.8530 | 0.8530 |
| Other Adjustment Factor | 1.0000 | 1.0000 | 1.0000 | 1.0000 | 1.0000 | 1.0000 | 1.0000 | 1.0000 | 1.0000 | 1.0000 | 1.0000 | 1.0000 |
| Total 15-Minute Volume [veh/h] | 10 | 115 | 17 | 8 | 63 | 14 | 22 | 68 | 15 | 8 | 45 | 5 |
| Total Analysis Volume [veh/h] | 41 | 460 | 69 | 34 | 251 | 55 | 89 | 271 | 61 | 34 | 181 | 19 |
| Presence of On-Street Parking | No | | No | No | | No | No | | No | No | | No |
| On-Street Parking Maneuver Rate [/h] | 0 | 0 | 0 | 0 | 0 | 0 | 0 | 0 | 0 | 0 | 0 | 0 |
| Local Bus Stopping Rate [/h] | 0 | 0 | 0 | 0 | 0 | 0 | 0 | 0 | 0 | 0 | 0 | 0 |
| Pedestrian Volume [ped/h] | 0 | | | 0 | | | 0 | | | 0 | | |
| Bicycle Volume [bicycles/h] | 0 | | | 0 | | | 0 | | | 0 | | |

**Intersection Settings**

| | |
|---|---|
| Located in CBD | No |
| Signal Coordination Group | - |
| Cycle Length [s] | 100 |
| Coordination Type | Time of Day Pattern Isolated |
| Actuation Type | Fully actuated |
| Offset [s] | 0.0 |
| Offset Reference | LagFO |
| Permissive Mode | SingleBand |
| Lost time [s] | 16.00 |

**Phasing & Timing**

| Control Type | Protecte | Permiss | Permiss | Protecte | Permiss | Permiss | Protecte | Permiss | Permiss | Protecte | Permiss | Permiss |
|---|---|---|---|---|---|---|---|---|---|---|---|---|
| Signal group | 5 | 2 | 0 | 1 | 6 | 0 | 3 | 8 | 0 | 7 | 4 | 0 |
| Auxiliary Signal Groups | | | | | | | | | | | | |
| Lead / Lag | Lead | - | - | Lead | - | - | Lead | - | - | Lead | - | - |
| Minimum Green [s] | 5 | 5 | 0 | 5 | 5 | 0 | 5 | 5 | 0 | 5 | 5 | 0 |
| Maximum Green [s] | 30 | 30 | 0 | 30 | 30 | 0 | 30 | 30 | 0 | 30 | 30 | 0 |
| Amber [s] | 4.4 | 4.4 | 0.0 | 4.4 | 4.4 | 0.0 | 4.1 | 4.1 | 0.0 | 4.1 | 4.1 | 0.0 |
| All red [s] | 1.0 | 1.0 | 0.0 | 1.0 | 1.0 | 0.0 | 1.0 | 1.0 | 0.0 | 1.0 | 1.0 | 0.0 |
| Split [s] | 11 | 37 | 0 | 11 | 37 | 0 | 15 | 40 | 0 | 12 | 37 | 0 |
| Vehicle Extension [s] | 3.0 | 3.0 | 0.0 | 3.0 | 3.0 | 0.0 | 3.0 | 3.0 | 0.0 | 3.0 | 3.0 | 0.0 |
| Walk [s] | 0 | 7 | 0 | 0 | 7 | 0 | 0 | 7 | 0 | 0 | 7 | 0 |
| Pedestrian Clearance [s] | 0 | 24 | 0 | 0 | 24 | 0 | 0 | 24 | 0 | 0 | 24 | 0 |
| I1, Start-Up Lost Time [s] | 2.0 | 2.0 | 0.0 | 2.0 | 2.0 | 0.0 | 2.0 | 2.0 | 0.0 | 2.0 | 2.0 | 0.0 |
| I2, Clearance Lost Time [s] | 3.4 | 3.4 | 0.0 | 3.4 | 3.4 | 0.0 | 3.1 | 3.1 | 0.0 | 3.1 | 3.1 | 0.0 |
| Minimum Recall | No | No | | No | No | | No | No | | No | No | |
| Maximum Recall | No | No | | No | No | | No | No | | No | No | |
| Pedestrian Recall | No | No | | No | No | | No | No | | No | No | |
| Detector Location [ft] | 0.0 | 0.0 | 0.0 | 0.0 | 0.0 | 0.0 | 0.0 | 0.0 | 0.0 | 0.0 | 0.0 | 0.0 |
| Detector Length [ft] | 0.0 | 0.0 | 0.0 | 0.0 | 0.0 | 0.0 | 0.0 | 0.0 | 0.0 | 0.0 | 0.0 | 0.0 |
| I, Upstream Filtering Factor | 1.00 | 1.00 | 1.00 | 1.00 | 1.00 | 1.00 | 1.00 | 1.00 | 1.00 | 1.00 | 1.00 | 1.00 |

**Exclusive Pedestrian Phase**

| | |
|---|---|
| Pedestrian Signal Group | 0 |
| Pedestrian Walk [s] | 0 |
| Pedestrian Clearance [s] | 0 |

**Lane Group Calculations**

| Lane Group | L | C | C | L | C | C | L | C | C | L | C | C |
|---|---|---|---|---|---|---|---|---|---|---|---|---|
| L, Total Lost Time per Cycle [s] | 5.40 | 5.40 | 5.40 | 5.40 | 5.40 | 5.40 | 5.10 | 5.10 | 5.10 | 5.10 | 5.10 | 5.10 |
| l1_p, Permitted Start-Up Lost Time [s] | 0.00 | 0.00 | 0.00 | 0.00 | 0.00 | 0.00 | 0.00 | 0.00 | 0.00 | 0.00 | 0.00 | 0.00 |
| l2, Clearance Lost Time [s] | 3.40 | 3.40 | 3.40 | 3.40 | 3.40 | 3.40 | 3.10 | 3.10 | 3.10 | 3.10 | 3.10 | 3.10 |
| g_i, Effective Green Time [s] | 2 | 8 | 8 | 2 | 8 | 8 | 3 | 6 | 6 | 2 | 4 | 4 |
| g / C, Green / Cycle | 0.05 | 0.22 | 0.22 | 0.04 | 0.21 | 0.21 | 0.08 | 0.16 | 0.16 | 0.04 | 0.12 | 0.12 |
| (v / s)_i Volume / Saturation Flow Rate | 0.02 | 0.14 | 0.15 | 0.02 | 0.08 | 0.09 | 0.05 | 0.09 | 0.09 | 0.02 | 0.05 | 0.06 |
| s, saturation flow rate [veh/h] | 1774 | 1863 | 1779 | 1774 | 1863 | 1750 | 1774 | 1863 | 1747 | 1774 | 1863 | 1802 |
| c, Capacity [veh/h] | 85 | 407 | 389 | 73 | 395 | 371 | 145 | 292 | 274 | 73 | 216 | 209 |
| d1, Uniform Delay [s] | 17.97 | 13.81 | 13.83 | 18.14 | 13.11 | 13.14 | 17.19 | 15.14 | 15.17 | 18.14 | 15.98 | 16.00 |
| k, delay calibration | 0.11 | 0.11 | 0.11 | 0.11 | 0.11 | 0.11 | 0.11 | 0.11 | 0.11 | 0.11 | 0.11 | 0.11 |
| I, Upstream Filtering Factor | 1.00 | 1.00 | 1.00 | 1.00 | 1.00 | 1.00 | 1.00 | 1.00 | 1.00 | 1.00 | 1.00 | 1.00 |
| d2, Incremental Delay [s] | 4.25 | 1.85 | 1.98 | 4.59 | 0.64 | 0.71 | 4.20 | 1.83 | 2.05 | 4.59 | 1.55 | 1.66 |
| d3, Initial Queue Delay [s] | 0.00 | 0.00 | 0.00 | 0.00 | 0.00 | 0.00 | 0.00 | 0.00 | 0.00 | 0.00 | 0.00 | 0.00 |
| Rp, platoon ratio | 1.00 | 1.00 | 1.00 | 1.00 | 1.00 | 1.00 | 1.00 | 1.00 | 1.00 | 1.00 | 1.00 | 1.00 |
| PF, progression factor | 1.00 | 1.00 | 1.00 | 1.00 | 1.00 | 1.00 | 1.00 | 1.00 | 1.00 | 1.00 | 1.00 | 1.00 |

**Lane Group Results**

| | | | | | | | | | | | | |
|---|---|---|---|---|---|---|---|---|---|---|---|---|
| X, volume / capacity | 0.48 | 0.66 | 0.67 | 0.47 | 0.39 | 0.40 | 0.62 | 0.58 | 0.59 | 0.47 | 0.47 | 0.47 |
| d, Delay for Lane Group [s/veh] | 22.22 | 15.66 | 15.81 | 22.73 | 13.75 | 13.85 | 21.39 | 16.98 | 17.22 | 22.73 | 17.53 | 17.66 |
| Lane Group LOS | C | B | B | C | B | B | C | B | B | C | B | B |
| Critical Lane Group | No | No | Yes | Yes | No | No | No | No | Yes | Yes | No | No |
| 50th-Percentile Queue Length [veh] | 0.39 | 1.79 | 1.74 | 0.33 | 0.94 | 0.91 | 0.80 | 1.25 | 1.21 | 0.34 | 0.77 | 0.76 |
| 50th-Percentile Queue Length [ft] | 9.69 | 44.87 | 43.55 | 8.33 | 23.45 | 22.79 | 19.97 | 31.33 | 30.37 | 8.52 | 19.24 | 19.10 |
| 95th-Percentile Queue Length [veh] | 0.70 | 3.23 | 3.14 | 0.60 | 1.69 | 1.64 | 1.44 | 2.26 | 2.19 | 0.61 | 1.39 | 1.38 |
| 95th-Percentile Queue Length [ft] | 17.45 | 80.77 | 78.40 | 14.99 | 42.20 | 41.03 | 35.94 | 56.39 | 54.67 | 15.34 | 34.63 | 34.38 |

**Movement, Approach, & Intersection Results**

| | | | | | | | | | | | | |
|---|---|---|---|---|---|---|---|---|---|---|---|---|
| d_M, Delay for Movement [s/veh] | 22.22 | 15.72 | 15.81 | 22.73 | 13.79 | 13.85 | 21.39 | 17.07 | 17.22 | 22.73 | 17.59 | 17.66 |
| Movement LOS | C | B | B | C | B | B | C | B | B | C | B | B |
| d_A, Approach Delay [s/veh] | 16.20 | | | 14.70 | | | 18.00 | | | 18.34 | | |
| Approach LOS | B | | | B | | | B | | | B | | |
| d_I, Intersection Delay [s/veh] | 16.68 | | | | | | | | | | | |
| Intersection LOS | B | | | | | | | | | | | |
| Intersection V/C | 0.474 | | | | | | | | | | | |

## Sequence

| | | | | | | | | | | | | | | | | |
|---|---|---|---|---|---|---|---|---|---|---|---|---|---|---|---|---|
| Ring 1 | 1 | 2 | 3 | 4 | - | - | - | - | - | - | - | - | - | - | - | - |
| Ring 2 | 5 | 6 | 7 | 8 | - | - | - | - | - | - | - | - | - | - | - | - |
| Ring 3 | - | - | - | - | - | - | - | - | - | - | - | - | - | - | - | - |
| Ring 4 | - | - | - | - | - | - | - | - | - | - | - | - | - | - | - | - |

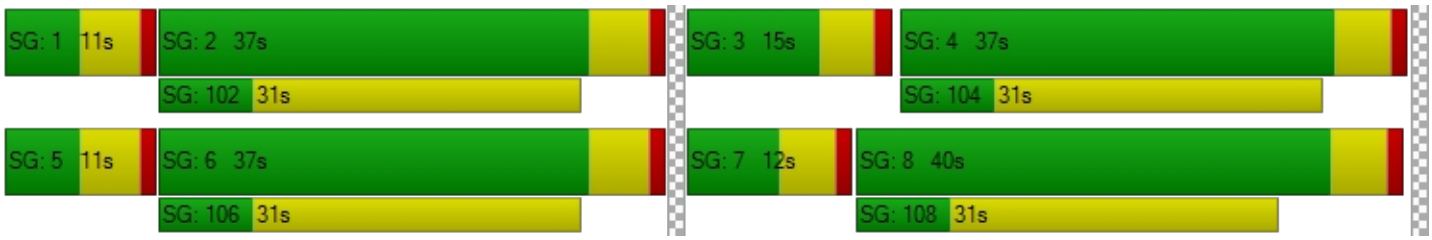

**Intersection Level Of Service Report**
**Intersection 7: Alder Ave (NS) / Marygold Ave (EW)**

| | | | |
|---|---|---|---|
| Control Type: | All-way stop | Delay (sec / veh): | 22.9 |
| Analysis Method: | HCM 2010 | Level Of Service: | C |
| Analysis Period: | 15 minutes | | |

**Intersection Setup**

| Name | Alder Avenue | | | Alder Avenue | | | Marygold Avenue | | | Marygold Avenue | | |
|---|---|---|---|---|---|---|---|---|---|---|---|---|
| Approach | Northbound | | | Southbound | | | Eastbound | | | Westbound | | |
| Lane Configuration | | | | | | | | | | | | |
| Turning Movement | Left | Thru | Right | Left | Thru | Right | Left | Thru | Right | Left | Thru | Right |
| Lane Width [ft] | 12.00 | 12.00 | 12.00 | 12.00 | 12.00 | 12.00 | 12.00 | 12.00 | 12.00 | 12.00 | 12.00 | 12.00 |
| No. of Lanes in Pocket | 0 | 0 | 1 | 0 | 0 | 0 | 0 | 0 | 0 | 0 | 0 | 0 |
| Pocket Length [ft] | 100.00 | 100.00 | 200.00 | 100.00 | 100.00 | 100.00 | 100.00 | 100.00 | 100.00 | 100.00 | 100.00 | 100.00 |
| Speed [mph] | 40.00 | | | 40.00 | | | 35.00 | | | 25.00 | | |
| Grade [%] | 0.00 | | | 0.00 | | | 0.00 | | | 0.00 | | |
| Crosswalk | Yes | | | Yes | | | Yes | | | Yes | | |

**volumes**

| Name | Alder Avenue | | | Alder Avenue | | | Marygold Avenue | | | Marygold Avenue | | |
|---|---|---|---|---|---|---|---|---|---|---|---|---|
| Base Volume Input [veh/h] | 28 | 367 | 32 | 42 | 242 | 74 | 134 | 127 | 20 | 14 | 76 | 22 |
| Base Volume Adjustment Factor | 1.0000 | 1.0000 | 1.0000 | 1.0000 | 1.0000 | 1.0000 | 1.0000 | 1.0000 | 1.0000 | 1.0000 | 1.0000 | 1.0000 |
| Heavy Vehicles Percentage [%] | 2.00 | 2.00 | 2.00 | 2.00 | 2.00 | 2.00 | 2.00 | 2.00 | 2.00 | 2.00 | 2.00 | 2.00 |
| Growth Rate | 1.00 | 1.00 | 1.00 | 1.00 | 1.00 | 1.00 | 1.00 | 1.00 | 1.00 | 1.00 | 1.00 | 1.00 |
| In-Process Volume [veh/h] | 0 | 0 | 0 | 0 | 0 | 0 | 0 | 0 | 0 | 0 | 0 | 0 |
| Site-Generated Trips [veh/h] | 0 | 0 | 0 | 0 | 0 | 0 | 0 | 0 | 0 | 0 | 0 | 0 |
| Diverted Trips [veh/h] | 0 | 0 | 0 | 0 | 0 | 0 | 0 | 0 | 0 | 0 | 0 | 0 |
| Pass-by Trips [veh/h] | 0 | 0 | 0 | 0 | 0 | 0 | 0 | 0 | 0 | 0 | 0 | 0 |
| Existing Site Adjustment Volume [veh/h] | 0 | 0 | 0 | 0 | 0 | 0 | 0 | 0 | 0 | 0 | 0 | 0 |
| Other Volume [veh/h] | 0 | 0 | 0 | 0 | 0 | 0 | 0 | 0 | 0 | 0 | 0 | 0 |
| Total Hourly Volume [veh/h] | 28 | 367 | 32 | 42 | 242 | 74 | 134 | 127 | 20 | 14 | 76 | 22 |
| Peak Hour Factor | 0.9220 | 0.9220 | 0.9220 | 0.9220 | 0.9220 | 0.9220 | 0.9220 | 0.9220 | 0.9220 | 0.9220 | 0.9220 | 0.9220 |
| Other Adjustment Factor | 1.0000 | 1.0000 | 1.0000 | 1.0000 | 1.0000 | 1.0000 | 1.0000 | 1.0000 | 1.0000 | 1.0000 | 1.0000 | 1.0000 |
| Total 15-Minute Volume [veh/h] | 8 | 100 | 9 | 11 | 66 | 20 | 36 | 34 | 5 | 4 | 21 | 6 |
| Total Analysis Volume [veh/h] | 30 | 398 | 35 | 46 | 262 | 80 | 145 | 138 | 22 | 15 | 82 | 24 |
| Pedestrian Volume [ped/h] | 0 | | | 0 | | | 0 | | | 0 | | |

**Intersection Settings**

**Lanes**

**Movement, Approach, & Intersection Results**

| | | | | | | |
|---|---|---|---|---|---|---|
| 95th-Percentile Queue Length [veh] | 8.11 | 0.19 | 4.02 | 0.49 | 3.69 | 0.97 |
| 95th-Percentile Queue Length [ft] | 202.74 | 4.76 | 100.52 | 12.17 | 92.37 | 24.33 |
| Approach Delay [s/veh] | 32.04 | | 18.18 | | 19.06 | 12.84 |
| Approach LOS | D | | C | | C | B |
| Intersection Delay [s/veh] | 22.91 | | | | | |
| Intersection LOS | C | | | | | |

**Intersection Level Of Service Report**
**Intersection 8: Alder Ave (NS) / Valley Blvd (EW)**

| | | | |
|---|---|---|---|
| Control Type: | Signalized | Delay (sec / veh): | 25.2 |
| Analysis Method: | HCM 2010 | Level Of Service: | C |
| Analysis Period: | 15 minutes | Volume to Capacity (v/c): | 0.658 |

**Intersection Setup**

| Name | Alder Avenue | | | Alder Avenue | | | Valley Boulevard | | | | | |
|---|---|---|---|---|---|---|---|---|---|---|---|---|
| Approach | Northbound | | | Southbound | | | Eastbound | | | Westbound | | |
| Lane Configuration | | | | | | | | | | | | |
| Turning Movement | Left | Thru | Right | Left | Thru | Right | Left | Thru | Right | Left | Thru | Right |
| Lane Width [ft] | 12.00 | 12.00 | 12.00 | 12.00 | 12.00 | 12.00 | 12.00 | 12.00 | 12.00 | 12.00 | 12.00 | 12.00 |
| No. of Lanes in Pocket | 0 | 0 | 1 | 0 | 0 | 0 | 1 | 0 | 0 | 1 | 0 | 0 |
| Pocket Length [ft] | 100.00 | 100.00 | 55.00 | 100.00 | 100.00 | 100.00 | 100.00 | 100.00 | 100.00 | 100.00 | 100.00 | 100.00 |
| Speed [mph] | 40.00 | | | 40.00 | | | 40.00 | | | 30.00 | | |
| Grade [%] | 0.00 | | | 0.00 | | | 0.00 | | | 0.00 | | |
| Crosswalk | Yes | | | Yes | | | Yes | | | Yes | | |

**volumes**

| Name | Alder Avenue | | | Alder Avenue | | | Valley Boulevard | | | | | |
|---|---|---|---|---|---|---|---|---|---|---|---|---|
| Base Volume Input [veh/h] | 35 | 26 | 15 | 123 | 15 | 123 | 272 | 681 | 38 | 6 | 416 | 143 |
| Base Volume Adjustment Factor | 1.0000 | 1.0000 | 1.0000 | 1.0000 | 1.0000 | 1.0000 | 1.0000 | 1.0000 | 1.0000 | 1.0000 | 1.0000 | 1.0000 |
| Heavy Vehicles Percentage [%] | 2.00 | 2.00 | 2.00 | 2.00 | 2.00 | 2.00 | 4.00 | 4.00 | 4.00 | 4.00 | 4.00 | 4.00 |
| Growth Rate | 1.00 | 1.00 | 1.00 | 1.00 | 1.00 | 1.00 | 1.00 | 1.00 | 1.00 | 1.00 | 1.00 | 1.00 |
| In-Process Volume [veh/h] | 0 | 0 | 0 | 0 | 0 | 0 | 0 | 0 | 0 | 0 | 0 | 0 |
| Site-Generated Trips [veh/h] | 0 | 0 | 0 | 0 | 0 | 0 | 0 | 0 | 0 | 0 | 0 | 0 |
| Diverted Trips [veh/h] | 0 | 0 | 0 | 0 | 0 | 0 | 0 | 0 | 0 | 0 | 0 | 0 |
| Pass-by Trips [veh/h] | 0 | 0 | 0 | 0 | 0 | 0 | 0 | 0 | 0 | 0 | 0 | 0 |
| Existing Site Adjustment Volume [veh/h] | 0 | 0 | 0 | 0 | 0 | 0 | 0 | 0 | 0 | 0 | 0 | 0 |
| Other Volume [veh/h] | 0 | 0 | 0 | 0 | 0 | 0 | 0 | 0 | 0 | 0 | 0 | 0 |
| Right-Turn on Red Volume [veh/h] | 0 | 0 | 0 | 0 | 0 | 0 | 0 | 0 | 0 | 0 | 0 | 0 |
| Total Hourly Volume [veh/h] | 35 | 26 | 15 | 123 | 15 | 123 | 272 | 681 | 38 | 6 | 416 | 143 |
| Peak Hour Factor | 0.8890 | 0.8890 | 0.8890 | 0.8890 | 0.8890 | 0.8890 | 0.8890 | 0.8890 | 0.8890 | 0.8890 | 0.8890 | 0.8890 |
| Other Adjustment Factor | 1.0000 | 1.0000 | 1.0000 | 1.0000 | 1.0000 | 1.0000 | 1.0000 | 1.0000 | 1.0000 | 1.0000 | 1.0000 | 1.0000 |
| Total 15-Minute Volume [veh/h] | 10 | 7 | 4 | 35 | 4 | 35 | 76 | 192 | 11 | 2 | 117 | 40 |
| Total Analysis Volume [veh/h] | 39 | 29 | 17 | 138 | 17 | 138 | 306 | 766 | 43 | 7 | 468 | 161 |
| Presence of On-Street Parking | No | | No | No | | No | No | | No | No | | No |
| On-Street Parking Maneuver Rate [/h] | 0 | 0 | 0 | 0 | 0 | 0 | 0 | 0 | 0 | 0 | 0 | 0 |
| Local Bus Stopping Rate [/h] | 0 | 0 | 0 | 0 | 0 | 0 | 0 | 0 | 0 | 0 | 0 | 0 |
| Pedestrian Volume [ped/h] | 0 | | | 0 | | | 0 | | | 0 | | |
| Bicycle Volume [bicycles/h] | 0 | | | 0 | | | 0 | | | 0 | | |

**Intersection Settings**

| | |
|---|---|
| Located in CBD | No |
| Signal Coordination Group | 3 - EW - Valley |
| Cycle Length [s] | 120 |
| Coordination Type | Time of Day Pattern Coordinated |
| Actuation Type | Fully actuated |
| Offset [s] | 45.0 |
| Offset Reference | LagFO |
| Permissive Mode | SingleBand |
| Lost time [s] | 12.00 |

**Phasing & Timing**

| Control Type | Permiss | Permiss | Permiss | Permiss | Permiss | Permiss | Protecte | Permiss | Permiss | Protecte | Permiss | Permiss |
|---|---|---|---|---|---|---|---|---|---|---|---|---|
| Signal group | 0 | 2 | 0 | 0 | 6 | 0 | 3 | 8 | 0 | 7 | 4 | 0 |
| Auxiliary Signal Groups | | | | | | | | | | | | |
| Lead / Lag | - | - | - | - | - | - | Lead | - | - | Lead | - | - |
| Minimum Green [s] | 0 | 5 | 0 | 0 | 5 | 0 | 5 | 5 | 0 | 5 | 5 | 0 |
| Maximum Green [s] | 0 | 30 | 0 | 0 | 30 | 0 | 30 | 30 | 0 | 30 | 30 | 0 |
| Amber [s] | 0.0 | 4.4 | 0.0 | 0.0 | 4.4 | 0.0 | 4.4 | 4.4 | 0.0 | 3.7 | 3.7 | 0.0 |
| All red [s] | 0.0 | 1.0 | 0.0 | 0.0 | 1.0 | 0.0 | 1.0 | 1.0 | 0.0 | 1.0 | 1.0 | 0.0 |
| Split [s] | 0 | 42 | 0 | 0 | 42 | 0 | 40 | 68 | 0 | 10 | 38 | 0 |
| Vehicle Extension [s] | 0.0 | 3.0 | 0.0 | 0.0 | 3.0 | 0.0 | 3.0 | 3.0 | 0.0 | 3.0 | 3.0 | 0.0 |
| Walk [s] | 0 | 7 | 0 | 0 | 7 | 0 | 0 | 7 | 0 | 0 | 7 | 0 |
| Pedestrian Clearance [s] | 0 | 25 | 0 | 0 | 29 | 0 | 0 | 22 | 0 | 0 | 21 | 0 |
| I1, Start-Up Lost Time [s] | 0.0 | 2.0 | 0.0 | 0.0 | 2.0 | 0.0 | 2.0 | 2.0 | 0.0 | 2.0 | 2.0 | 0.0 |
| I2, Clearance Lost Time [s] | 0.0 | 3.4 | 0.0 | 0.0 | 3.4 | 0.0 | 3.4 | 3.4 | 0.0 | 2.7 | 2.7 | 0.0 |
| Minimum Recall | | No | | | No | | No | No | | No | No | |
| Maximum Recall | | No | | | No | | No | No | | No | No | |
| Pedestrian Recall | | No | | | No | | No | No | | No | No | |
| Detector Location [ft] | 0.0 | 0.0 | 0.0 | 0.0 | 0.0 | 0.0 | 0.0 | 0.0 | 0.0 | 0.0 | 0.0 | 0.0 |
| Detector Length [ft] | 0.0 | 0.0 | 0.0 | 0.0 | 0.0 | 0.0 | 0.0 | 0.0 | 0.0 | 0.0 | 0.0 | 0.0 |
| I, Upstream Filtering Factor | 1.00 | 1.00 | 1.00 | 1.00 | 1.00 | 1.00 | 1.00 | 1.00 | 1.00 | 1.00 | 1.00 | 1.00 |

**Exclusive Pedestrian Phase**

| | |
|---|---|
| Pedestrian Signal Group | 0 |
| Pedestrian Walk [s] | 0 |
| Pedestrian Clearance [s] | 0 |

**Lane Group Calculations**

| Lane Group | C | R | C | L | C | C | L | C | C |
|---|---|---|---|---|---|---|---|---|---|
| L, Total Lost Time per Cycle [s] | 5.40 | 5.40 | 5.40 | 5.40 | 5.40 | 5.40 | 4.70 | 4.70 | 4.70 |
| l1_p, Permitted Start-Up Lost Time [s] | 2.00 | 0.00 | 2.00 | 0.00 | 0.00 | 0.00 | 0.00 | 0.00 | 0.00 |
| l2, Clearance Lost Time [s] | 3.40 | 3.40 | 3.40 | 3.40 | 3.40 | 3.40 | 2.70 | 2.70 | 2.70 |
| g_i, Effective Green Time [s] | 31 | 31 | 31 | 23 | 73 | 73 | 1 | 51 | 51 |
| g / C, Green / Cycle | 0.26 | 0.26 | 0.26 | 0.19 | 0.61 | 0.61 | 0.01 | 0.42 | 0.42 |
| (v / s)_i Volume / Saturation Flow Rate | 0.06 | 0.01 | 0.24 | 0.18 | 0.22 | 0.22 | 0.00 | 0.18 | 0.18 |
| s, saturation flow rate [veh/h] | 1174 | 1583 | 1244 | 1740 | 1827 | 1793 | 1740 | 1827 | 1670 |
| c, Capacity [veh/h] | 348 | 405 | 363 | 335 | 1107 | 1087 | 15 | 771 | 705 |
| d1, Uniform Delay [s] | 34.74 | 33.57 | 45.85 | 43.59 | 5.24 | 5.24 | 59.02 | 17.86 | 17.90 |
| k, delay calibration | 0.11 | 0.11 | 0.27 | 0.11 | 0.50 | 0.50 | 0.11 | 0.50 | 0.50 |
| I, Upstream Filtering Factor | 1.00 | 1.00 | 1.00 | 1.00 | 1.00 | 1.00 | 1.00 | 1.00 | 1.00 |
| d2, Incremental Delay [s] | 0.27 | 0.04 | 10.09 | 9.69 | 0.95 | 0.96 | 20.21 | 1.71 | 1.90 |
| d3, Initial Queue Delay [s] | 0.00 | 0.00 | 0.00 | 0.00 | 0.00 | 0.00 | 0.00 | 0.00 | 0.00 |
| Rp, platoon ratio | 1.00 | 1.00 | 1.00 | 1.33 | 1.33 | 1.33 | 1.33 | 1.33 | 1.33 |
| PF, progression factor | 1.00 | 1.00 | 1.00 | 1.00 | 1.00 | 1.00 | 1.00 | 1.00 | 1.00 |

**Lane Group Results**

| | | | | | | | | | |
|---|---|---|---|---|---|---|---|---|---|
| X, volume / capacity | 0.20 | 0.04 | 0.81 | 0.91 | 0.37 | 0.37 | 0.46 | 0.42 | 0.43 |
| d, Delay for Lane Group [s/veh] | 35.01 | 33.61 | 55.94 | 53.28 | 6.19 | 6.20 | 79.23 | 19.57 | 19.80 |
| Lane Group LOS | D | C | E | D | A | A | E | B | B |
| Critical Lane Group | No | No | Yes | Yes | No | No | No | No | Yes |
| 50th-Percentile Queue Length [veh] | 1.56 | 0.37 | 9.36 | 9.02 | 2.47 | 2.43 | 0.30 | 5.05 | 4.70 |
| 50th-Percentile Queue Length [ft] | 39.02 | 9.34 | 234.09 | 225.58 | 61.68 | 60.69 | 7.42 | 126.14 | 117.53 |
| 95th-Percentile Queue Length [veh] | 2.81 | 0.67 | 14.38 | 13.95 | 4.44 | 4.37 | 0.53 | 8.73 | 8.26 |
| 95th-Percentile Queue Length [ft] | 70.23 | 16.82 | 359.55 | 348.74 | 111.02 | 109.25 | 13.35 | 218.24 | 206.43 |

**Movement, Approach, & Intersection Results**

| | | | | | | | | | | | | |
|---|---|---|---|---|---|---|---|---|---|---|---|---|
| d_M, Delay for Movement [s/veh] | 35.01 | 35.01 | 33.61 | 55.94 | 55.94 | 55.94 | 53.28 | 6.19 | 6.20 | 79.23 | 19.64 | 19.80 |
| Movement LOS | D | D | C | E | E | E | D | A | A | E | B | B |
| d_A, Approach Delay [s/veh] | 34.73 | | | 55.94 | | | 19.12 | | | 20.34 | | |
| Approach LOS | C | | | E | | | B | | | C | | |
| d_I, Intersection Delay [s/veh] | 25.17 | | | | | | | | | | | |
| Intersection LOS | C | | | | | | | | | | | |
| Intersection V/C | 0.658 | | | | | | | | | | | |

## Sequence

| | | | | | | | | | | | | | | | | |
|---|---|---|---|---|---|---|---|---|---|---|---|---|---|---|---|---|
| Ring 1 | 2 | 3 | 4 | - | - | - | - | - | - | - | - | - | - | - | - | - |
| Ring 2 | 6 | 7 | 8 | - | - | - | - | - | - | - | - | - | - | - | - | - |
| Ring 3 | - | - | - | - | - | - | - | - | - | - | - | - | - | - | - | - |
| Ring 4 | - | - | - | - | - | - | - | - | - | - | - | - | - | - | - | - |

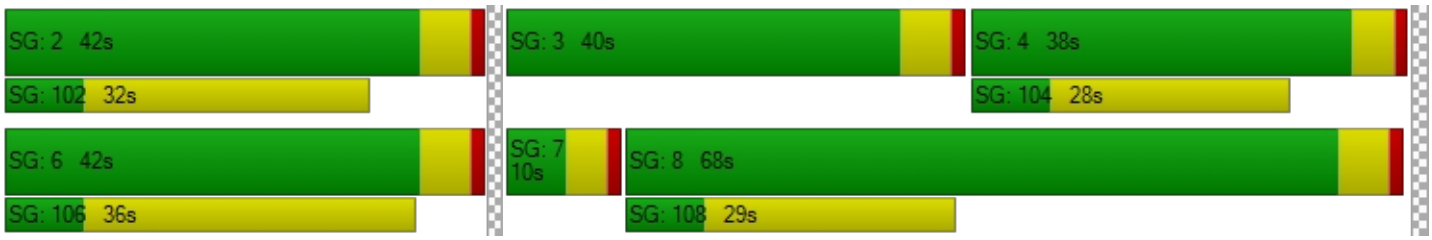

**Intersection Level Of Service Report**
**Intersection 9: Locust Ave (NS) / Marygold Ave (EW)**

| | | | |
|---|---|---|---|
| Control Type: | All-way stop | Delay (sec / veh): | 10.7 |
| Analysis Method: | HCM 2010 | Level Of Service: | B |
| Analysis Period: | 15 minutes | | |

**Intersection Setup**

| Name | Locust Avenue | | | Locust Avenue | | | Marygold Avenue | | | | | |
|---|---|---|---|---|---|---|---|---|---|---|---|---|
| Approach | Northbound | | | Southbound | | | Eastbound | | | Westbound | | |
| Lane Configuration | | | | | | | | | | | | |
| Turning Movement | Left | Thru | Right | Left | Thru | Right | Left | Thru | Right | Left | Thru | Right |
| Lane Width [ft] | 12.00 | 12.00 | 12.00 | 12.00 | 12.00 | 12.00 | 12.00 | 12.00 | 12.00 | 12.00 | 12.00 | 12.00 |
| No. of Lanes in Pocket | 0 | 0 | 1 | 0 | 0 | 1 | 0 | 0 | 0 | 0 | 0 | 0 |
| Pocket Length [ft] | 100.00 | 100.00 | 100.00 | 100.00 | 100.00 | 325.00 | 100.00 | 100.00 | 100.00 | 100.00 | 100.00 | 100.00 |
| Speed [mph] | 30.00 | | | 40.00 | | | 30.00 | | | 30.00 | | |
| Grade [%] | 0.00 | | | 0.00 | | | 0.00 | | | 0.00 | | |
| Crosswalk | Yes | | | Yes | | | Yes | | | Yes | | |

**volumes**

| Name | Locust Avenue | | | Locust Avenue | | | Marygold Avenue | | | | | |
|---|---|---|---|---|---|---|---|---|---|---|---|---|
| Base Volume Input [veh/h] | 19 | 260 | 29 | 12 | 128 | 34 | 55 | 96 | 17 | 5 | 44 | 9 |
| Base Volume Adjustment Factor | 1.0000 | 1.0000 | 1.0000 | 1.0000 | 1.0000 | 1.0000 | 1.0000 | 1.0000 | 1.0000 | 1.0000 | 1.0000 | 1.0000 |
| Heavy Vehicles Percentage [%] | 2.00 | 2.00 | 2.00 | 2.00 | 2.00 | 2.00 | 2.00 | 2.00 | 2.00 | 2.00 | 2.00 | 2.00 |
| Growth Rate | 1.00 | 1.00 | 1.00 | 1.00 | 1.00 | 1.00 | 1.00 | 1.00 | 1.00 | 1.00 | 1.00 | 1.00 |
| In-Process Volume [veh/h] | 0 | 0 | 0 | 0 | 0 | 0 | 0 | 0 | 0 | 0 | 0 | 0 |
| Site-Generated Trips [veh/h] | 0 | 0 | 0 | 0 | 0 | 0 | 0 | 0 | 0 | 0 | 0 | 0 |
| Diverted Trips [veh/h] | 0 | 0 | 0 | 0 | 0 | 0 | 0 | 0 | 0 | 0 | 0 | 0 |
| Pass-by Trips [veh/h] | 0 | 0 | 0 | 0 | 0 | 0 | 0 | 0 | 0 | 0 | 0 | 0 |
| Existing Site Adjustment Volume [veh/h] | 0 | 0 | 0 | 0 | 0 | 0 | 0 | 0 | 0 | 0 | 0 | 0 |
| Other Volume [veh/h] | 0 | 0 | 0 | 0 | 0 | 0 | 0 | 0 | 0 | 0 | 0 | 0 |
| Total Hourly Volume [veh/h] | 19 | 260 | 29 | 12 | 128 | 34 | 55 | 96 | 17 | 5 | 44 | 9 |
| Peak Hour Factor | 0.9500 | 0.9500 | 0.9500 | 0.9500 | 0.9500 | 0.9500 | 0.9500 | 0.9500 | 0.9500 | 0.9500 | 0.9500 | 0.9500 |
| Other Adjustment Factor | 1.0000 | 1.0000 | 1.0000 | 1.0000 | 1.0000 | 1.0000 | 1.0000 | 1.0000 | 1.0000 | 1.0000 | 1.0000 | 1.0000 |
| Total 15-Minute Volume [veh/h] | 5 | 68 | 8 | 3 | 34 | 9 | 14 | 25 | 4 | 1 | 12 | 2 |
| Total Analysis Volume [veh/h] | 20 | 274 | 31 | 13 | 135 | 36 | 58 | 101 | 18 | 5 | 46 | 9 |
| Pedestrian Volume [ped/h] | 0 | | | 0 | | | 0 | | | 0 | | |

**Intersection Settings**

**Lanes**

**Movement, Approach, & Intersection Results**

| | | | | | | |
|---|---|---|---|---|---|---|
| 95th-Percentile Queue Length [veh] | 2.29 | 0.13 | 0.89 | 0.15 | 1.04 | 0.30 |
| 95th-Percentile Queue Length [ft] | 57.26 | 3.16 | 22.19 | 3.83 | 26.02 | 7.45 |
| Approach Delay [s/veh] | 11.98 | | 9.56 | | 10.16 | 8.98 |
| Approach LOS | B | | A | | B | A |
| Intersection Delay [s/veh] | 10.71 | | | | | |
| Intersection LOS | B | | | | | |

**Intersection Level Of Service Report**
**Intersection 10: Locust Ave (NS) / Valley Blvd (EW)**

| | | | |
|---|---|---|---|
| Control Type: | Signalized | Delay (sec / veh): | 16.8 |
| Analysis Method: | HCM 2010 | Level Of Service: | B |
| Analysis Period: | 15 minutes | Volume to Capacity (v/c): | 0.453 |

**Intersection Setup**

| Name | Locust Avenue | | | Locust Avenue | | | Valley Boulevard | | | Valley Boulevard | | |
|---|---|---|---|---|---|---|---|---|---|---|---|---|
| Approach | Northbound | | | Southbound | | | Eastbound | | | Westbound | | |
| Lane Configuration | | | | | | | | | | | | |
| Turning Movement | Left | Thru | Right | Left | Thru | Right | Left | Thru | Right | Left | Thru | Right |
| Lane Width [ft] | 12.00 | 12.00 | 12.00 | 12.00 | 12.00 | 12.00 | 12.00 | 12.00 | 12.00 | 12.00 | 12.00 | 12.00 |
| No. of Lanes in Pocket | 0 | 0 | 0 | 0 | 0 | 0 | 1 | 0 | 0 | 1 | 0 | 0 |
| Pocket Length [ft] | 100.00 | 100.00 | 100.00 | 100.00 | 100.00 | 100.00 | 100.00 | 100.00 | 100.00 | 200.00 | 100.00 | 100.00 |
| Speed [mph] | 30.00 | | | 40.00 | | | 45.00 | | | 45.00 | | |
| Grade [%] | 0.00 | | | 0.00 | | | 0.00 | | | 0.00 | | |
| Crosswalk | Yes | | | Yes | | | No | | | Yes | | |

**volumes**

| Name | Locust Avenue | | | Locust Avenue | | | Valley Boulevard | | | Valley Boulevard | | |
|---|---|---|---|---|---|---|---|---|---|---|---|---|
| Base Volume Input [veh/h] | 12 | 10 | 37 | 78 | 7 | 48 | 159 | 722 | 17 | 71 | 505 | 126 |
| Base Volume Adjustment Factor | 1.0000 | 1.0000 | 1.0000 | 1.0000 | 1.0000 | 1.0000 | 1.0000 | 1.0000 | 1.0000 | 1.0000 | 1.0000 | 1.0000 |
| Heavy Vehicles Percentage [%] | 2.00 | 2.00 | 2.00 | 2.00 | 2.00 | 2.00 | 4.00 | 4.00 | 4.00 | 4.00 | 4.00 | 4.00 |
| Growth Rate | 1.00 | 1.00 | 1.00 | 1.00 | 1.00 | 1.00 | 1.00 | 1.00 | 1.00 | 1.00 | 1.00 | 1.00 |
| In-Process Volume [veh/h] | 0 | 0 | 0 | 0 | 0 | 0 | 0 | 0 | 0 | 0 | 0 | 0 |
| Site-Generated Trips [veh/h] | 0 | 0 | 0 | 0 | 0 | 0 | 0 | 0 | 0 | 0 | 0 | 0 |
| Diverted Trips [veh/h] | 0 | 0 | 0 | 0 | 0 | 0 | 0 | 0 | 0 | 0 | 0 | 0 |
| Pass-by Trips [veh/h] | 0 | 0 | 0 | 0 | 0 | 0 | 0 | 0 | 0 | 0 | 0 | 0 |
| Existing Site Adjustment Volume [veh/h] | 0 | 0 | 0 | 0 | 0 | 0 | 0 | 0 | 0 | 0 | 0 | 0 |
| Other Volume [veh/h] | 0 | 0 | 0 | 0 | 0 | 0 | 0 | 0 | 0 | 0 | 0 | 0 |
| Right-Turn on Red Volume [veh/h] | 0 | 0 | 0 | 0 | 0 | 0 | 0 | 0 | 0 | 0 | 0 | 0 |
| Total Hourly Volume [veh/h] | 12 | 10 | 37 | 78 | 7 | 48 | 159 | 722 | 17 | 71 | 505 | 126 |
| Peak Hour Factor | 0.9100 | 0.9100 | 0.9100 | 0.9100 | 0.9100 | 0.9100 | 0.9100 | 0.9100 | 0.9100 | 0.9100 | 0.9100 | 0.9100 |
| Other Adjustment Factor | 1.0000 | 1.0000 | 1.0000 | 1.0000 | 1.0000 | 1.0000 | 1.0000 | 1.0000 | 1.0000 | 1.0000 | 1.0000 | 1.0000 |
| Total 15-Minute Volume [veh/h] | 3 | 3 | 10 | 21 | 2 | 13 | 44 | 198 | 5 | 20 | 139 | 35 |
| Total Analysis Volume [veh/h] | 13 | 11 | 41 | 86 | 8 | 53 | 175 | 793 | 19 | 78 | 555 | 138 |
| Presence of On-Street Parking | No | | No | No | | No | No | | No | No | | No |
| On-Street Parking Maneuver Rate [/h] | 0 | 0 | 0 | 0 | 0 | 0 | 0 | 0 | 0 | 0 | 0 | 0 |
| Local Bus Stopping Rate [/h] | 0 | 0 | 0 | 0 | 0 | 0 | 0 | 0 | 0 | 0 | 0 | 0 |
| Pedestrian Volume [ped/h] | 0 | | | 0 | | | 0 | | | 0 | | |
| Bicycle Volume [bicycles/h] | 0 | | | 0 | | | 0 | | | 0 | | |

**Intersection Settings**

| | |
|---|---|
| Located in CBD | No |
| Signal Coordination Group | 3 - EW - Valley |
| Cycle Length [s] | 120 |
| Coordination Type | Time of Day Pattern Coordinated |
| Actuation Type | Fully actuated |
| Offset [s] | 66.0 |
| Offset Reference | LagFO |
| Permissive Mode | SingleBand |
| Lost time [s] | 12.00 |

**Phasing & Timing**

| Control Type | Permiss | Permiss | Permiss | Permiss | Permiss | Permiss | Protecte | Permiss | Permiss | Protecte | Permiss | Permiss |
|---|---|---|---|---|---|---|---|---|---|---|---|---|
| Signal group | 0 | 2 | 0 | 0 | 6 | 0 | 3 | 8 | 0 | 7 | 4 | 0 |
| Auxiliary Signal Groups | | | | | | | | | | | | |
| Lead / Lag | - | - | - | - | - | - | Lead | - | - | Lead | - | - |
| Minimum Green [s] | 0 | 5 | 0 | 0 | 5 | 0 | 5 | 5 | 0 | 5 | 5 | 0 |
| Maximum Green [s] | 0 | 30 | 0 | 0 | 30 | 0 | 30 | 30 | 0 | 30 | 30 | 0 |
| Amber [s] | 0.0 | 3.7 | 0.0 | 0.0 | 4.4 | 0.0 | 4.8 | 4.8 | 0.0 | 4.8 | 4.8 | 0.0 |
| All red [s] | 0.0 | 1.0 | 0.0 | 0.0 | 1.0 | 0.0 | 1.0 | 1.0 | 0.0 | 1.0 | 1.0 | 0.0 |
| Split [s] | 0 | 38 | 0 | 0 | 38 | 0 | 27 | 66 | 0 | 16 | 55 | 0 |
| Vehicle Extension [s] | 0.0 | 3.0 | 0.0 | 0.0 | 3.0 | 0.0 | 3.0 | 3.0 | 0.0 | 3.0 | 3.0 | 0.0 |
| Walk [s] | 0 | 7 | 0 | 0 | 7 | 0 | 0 | 7 | 0 | 0 | 7 | 0 |
| Pedestrian Clearance [s] | 0 | 26 | 0 | 0 | 10 | 0 | 0 | 16 | 0 | 0 | 19 | 0 |
| I1, Start-Up Lost Time [s] | 0.0 | 2.0 | 0.0 | 0.0 | 2.0 | 0.0 | 2.0 | 2.0 | 0.0 | 2.0 | 2.0 | 0.0 |
| I2, Clearance Lost Time [s] | 0.0 | 2.7 | 0.0 | 0.0 | 3.4 | 0.0 | 3.8 | 3.8 | 0.0 | 3.8 | 3.8 | 0.0 |
| Minimum Recall | | No | | | No | | No | No | | No | No | |
| Maximum Recall | | No | | | No | | No | No | | No | No | |
| Pedestrian Recall | | No | | | No | | No | No | | No | No | |
| Detector Location [ft] | 0.0 | 0.0 | 0.0 | 0.0 | 0.0 | 0.0 | 0.0 | 0.0 | 0.0 | 0.0 | 0.0 | 0.0 |
| Detector Length [ft] | 0.0 | 0.0 | 0.0 | 0.0 | 0.0 | 0.0 | 0.0 | 0.0 | 0.0 | 0.0 | 0.0 | 0.0 |
| I, Upstream Filtering Factor | 1.00 | 1.00 | 1.00 | 1.00 | 1.00 | 1.00 | 1.00 | 1.00 | 1.00 | 1.00 | 1.00 | 1.00 |

**Exclusive Pedestrian Phase**

| | |
|---|---|
| Pedestrian Signal Group | 0 |
| Pedestrian Walk [s] | 0 |
| Pedestrian Clearance [s] | 0 |

**Lane Group Calculations**

| Lane Group | C | C | L | C | C | L | C | C |
|---|---|---|---|---|---|---|---|---|
| L, Total Lost Time per Cycle [s] | 4.70 | 5.40 | 5.80 | 5.80 | 5.80 | 5.80 | 5.80 | 5.80 |
| l1_p, Permitted Start-Up Lost Time [s] | 2.00 | 2.00 | 0.00 | 0.00 | 0.00 | 0.00 | 0.00 | 0.00 |
| l2, Clearance Lost Time [s] | 0.00 | 3.40 | 3.80 | 3.80 | 3.80 | 3.80 | 3.80 | 3.80 |
| g_i, Effective Green Time [s] | 16 | 15 | 14 | 81 | 81 | 7 | 74 | 74 |
| g / C, Green / Cycle | 0.13 | 0.13 | 0.12 | 0.67 | 0.67 | 0.06 | 0.61 | 0.61 |
| (v / s)_i Volume / Saturation Flow Rate | 0.04 | 0.11 | 0.10 | 0.22 | 0.22 | 0.04 | 0.20 | 0.20 |
| s, saturation flow rate [veh/h] | 1662 | 1326 | 1740 | 1827 | 1812 | 1740 | 1827 | 1703 |
| c, Capacity [veh/h] | 230 | 217 | 204 | 1230 | 1220 | 100 | 1121 | 1045 |
| d1, Uniform Delay [s] | 46.86 | 51.70 | 49.63 | 2.20 | 2.20 | 54.67 | 4.75 | 4.76 |
| k, delay calibration | 0.11 | 0.11 | 0.11 | 0.50 | 0.50 | 0.11 | 0.50 | 0.50 |
| I, Upstream Filtering Factor | 1.00 | 1.00 | 1.00 | 1.00 | 1.00 | 1.00 | 1.00 | 1.00 |
| d2, Incremental Delay [s] | 0.66 | 3.68 | 9.93 | 0.72 | 0.73 | 12.43 | 0.75 | 0.81 |
| d3, Initial Queue Delay [s] | 0.00 | 0.00 | 0.00 | 0.00 | 0.00 | 0.00 | 0.00 | 0.00 |
| Rp, platoon ratio | 1.00 | 1.00 | 1.33 | 1.33 | 1.33 | 1.33 | 1.33 | 1.33 |
| PF, progression factor | 1.00 | 1.00 | 1.00 | 1.00 | 1.00 | 1.00 | 1.00 | 1.00 |

**Lane Group Results**

| | | | | | | | | |
|---|---|---|---|---|---|---|---|---|
| X, volume / capacity | 0.28 | 0.68 | 0.86 | 0.33 | 0.33 | 0.78 | 0.32 | 0.32 |
| d, Delay for Lane Group [s/veh] | 47.52 | 55.38 | 59.56 | 2.93 | 2.93 | 67.10 | 5.51 | 5.57 |
| Lane Group LOS | D | E | E | A | A | E | A | A |
| Critical Lane Group | No | Yes | Yes | No | No | No | No | Yes |
| 50th-Percentile Queue Length [veh] | 1.80 | 4.49 | 5.35 | 1.26 | 1.25 | 2.57 | 1.97 | 1.86 |
| 50th-Percentile Queue Length [ft] | 45.00 | 112.21 | 133.68 | 31.42 | 31.21 | 64.28 | 49.36 | 46.57 |
| 95th-Percentile Queue Length [veh] | 3.24 | 7.96 | 9.14 | 2.26 | 2.25 | 4.63 | 3.55 | 3.35 |
| 95th-Percentile Queue Length [ft] | 81.00 | 199.07 | 228.49 | 56.56 | 56.19 | 115.70 | 88.85 | 83.82 |

**Movement, Approach, & Intersection Results**

| | | | | | | | | | | | | |
|---|---|---|---|---|---|---|---|---|---|---|---|---|
| d_M, Delay for Movement [s/veh] | 47.52 | 47.52 | 47.52 | 55.38 | 55.38 | 55.38 | 59.56 | 2.93 | 2.93 | 67.10 | 5.53 | 5.57 |
| Movement LOS | D | D | D | E | E | E | E | A | A | E | A | A |
| d_A, Approach Delay [s/veh] | 47.52 | | | 55.38 | | | 12.97 | | | 11.76 | | |
| Approach LOS | D | | | E | | | B | | | B | | |
| d_I, Intersection Delay [s/veh] | 16.80 | | | | | | | | | | | |
| Intersection LOS | B | | | | | | | | | | | |
| Intersection V/C | 0.453 | | | | | | | | | | | |

## Sequence

| | | | | | | | | | | | | | | | | |
|---|---|---|---|---|---|---|---|---|---|---|---|---|---|---|---|---|
| Ring 1 | 2 | 3 | 4 | - | - | - | - | - | - | - | - | - | - | - | - | - |
| Ring 2 | 6 | 7 | 8 | - | - | - | - | - | - | - | - | - | - | - | - | - |
| Ring 3 | - | - | - | - | - | - | - | - | - | - | - | - | - | - | - | - |
| Ring 4 | - | - | - | - | - | - | - | - | - | - | - | - | - | - | - | - |

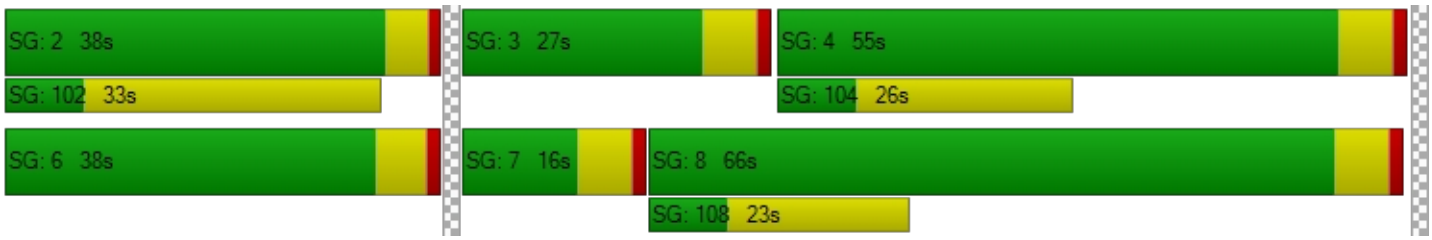

**Intersection Level Of Service Report**
**Intersection 11: Cedar Ave (NS) / San Bernardino Ave (EW)**

| | | | |
|---|---|---|---|
| Control Type: | Signalized | Delay (sec / veh): | 16.8 |
| Analysis Method: | HCM 2010 | Level Of Service: | B |
| Analysis Period: | 15 minutes | Volume to Capacity (v/c): | 0.502 |

**Intersection Setup**

| Name | Cedar Avenue | | | Cedar Avenue | | | | | | San Bernardino Avenue | | |
|---|---|---|---|---|---|---|---|---|---|---|---|---|
| Approach | Northbound | | | Southbound | | | Eastbound | | | Westbound | | |
| Lane Configuration | | | | | | | | | | | | |
| Turning Movement | Left | Thru | Right | Left | Thru | Right | Left | Thru | Right | Left | Thru | Right |
| Lane Width [ft] | 12.00 | 12.00 | 12.00 | 12.00 | 12.00 | 12.00 | 12.00 | 12.00 | 12.00 | 12.00 | 12.00 | 12.00 |
| No. of Lanes in Pocket | 1 | 0 | 0 | 1 | 0 | 0 | 1 | 0 | 1 | 1 | 0 | 0 |
| Pocket Length [ft] | 125.00 | 100.00 | 100.00 | 125.00 | 100.00 | 100.00 | 100.00 | 100.00 | 100.00 | 100.00 | 100.00 | 100.00 |
| Speed [mph] | 40.00 | | | 40.00 | | | 30.00 | | | 40.00 | | |
| Grade [%] | 0.00 | | | 0.00 | | | 0.00 | | | 0.00 | | |
| Crosswalk | Yes | | | Yes | | | Yes | | | Yes | | |

**volumes**

| Name | Cedar Avenue | | | Cedar Avenue | | | | | | San Bernardino Avenue | | |
|---|---|---|---|---|---|---|---|---|---|---|---|---|
| Base Volume Input [veh/h] | 37 | 907 | 53 | 39 | 744 | 35 | 36 | 151 | 50 | 30 | 106 | 47 |
| Base Volume Adjustment Factor | 1.0000 | 1.0000 | 1.0000 | 1.0000 | 1.0000 | 1.0000 | 1.0000 | 1.0000 | 1.0000 | 1.0000 | 1.0000 | 1.0000 |
| Heavy Vehicles Percentage [%] | 4.00 | 4.00 | 4.00 | 4.00 | 4.00 | 4.00 | 2.00 | 2.00 | 2.00 | 2.00 | 2.00 | 2.00 |
| Growth Rate | 1.00 | 1.00 | 1.00 | 1.00 | 1.00 | 1.00 | 1.00 | 1.00 | 1.00 | 1.00 | 1.00 | 1.00 |
| In-Process Volume [veh/h] | 0 | 0 | 0 | 0 | 0 | 0 | 0 | 0 | 0 | 0 | 0 | 0 |
| Site-Generated Trips [veh/h] | 0 | 0 | 0 | 0 | 0 | 0 | 0 | 0 | 0 | 0 | 0 | 0 |
| Diverted Trips [veh/h] | 0 | 0 | 0 | 0 | 0 | 0 | 0 | 0 | 0 | 0 | 0 | 0 |
| Pass-by Trips [veh/h] | 0 | 0 | 0 | 0 | 0 | 0 | 0 | 0 | 0 | 0 | 0 | 0 |
| Existing Site Adjustment Volume [veh/h] | 0 | 0 | 0 | 0 | 0 | 0 | 0 | 0 | 0 | 0 | 0 | 0 |
| Other Volume [veh/h] | 0 | 0 | 0 | 0 | 0 | 0 | 0 | 0 | 0 | 0 | 0 | 0 |
| Right-Turn on Red Volume [veh/h] | 0 | 0 | 0 | 0 | 0 | 0 | 0 | 0 | 0 | 0 | 0 | 0 |
| Total Hourly Volume [veh/h] | 37 | 907 | 53 | 39 | 744 | 35 | 36 | 151 | 50 | 30 | 106 | 47 |
| Peak Hour Factor | 0.8870 | 0.8870 | 0.8870 | 0.8870 | 0.8870 | 0.8870 | 0.8870 | 0.8870 | 0.8870 | 0.8870 | 0.8870 | 0.8870 |
| Other Adjustment Factor | 1.0000 | 1.0000 | 1.0000 | 1.0000 | 1.0000 | 1.0000 | 1.0000 | 1.0000 | 1.0000 | 1.0000 | 1.0000 | 1.0000 |
| Total 15-Minute Volume [veh/h] | 10 | 256 | 15 | 11 | 210 | 10 | 10 | 43 | 14 | 8 | 30 | 13 |
| Total Analysis Volume [veh/h] | 42 | 1023 | 60 | 44 | 839 | 39 | 41 | 170 | 56 | 34 | 120 | 53 |
| Presence of On-Street Parking | No | | No | No | | No | No | | No | No | | No |
| On-Street Parking Maneuver Rate [/h] | 0 | 0 | 0 | 0 | 0 | 0 | 0 | 0 | 0 | 0 | 0 | 0 |
| Local Bus Stopping Rate [/h] | 0 | 0 | 0 | 0 | 0 | 0 | 0 | 0 | 0 | 0 | 0 | 0 |
| Pedestrian Volume [ped/h] | 0 | | | 0 | | | 0 | | | 0 | | |
| Bicycle Volume [bicycles/h] | 0 | | | 0 | | | 0 | | | 0 | | |

**Intersection Settings**

| | |
|---|---|
| Located in CBD | No |
| Signal Coordination Group | 2 - NS - Cedar |
| Cycle Length [s] | 120 |
| Coordination Type | Time of Day Pattern Coordinated |
| Actuation Type | Fully actuated |
| Offset [s] | 0.0 |
| Offset Reference | LagFO |
| Permissive Mode | SingleBand |
| Lost time [s] | 16.00 |

**Phasing & Timing**

| Control Type | Protecte | Permiss | Permiss | Protecte | Permiss | Permiss | Protecte | Permiss | Permiss | Protecte | Permiss | Permiss |
|---|---|---|---|---|---|---|---|---|---|---|---|---|
| Signal group | 5 | 2 | 0 | 1 | 6 | 0 | 3 | 8 | 0 | 7 | 4 | 0 |
| Auxiliary Signal Groups | | | | | | | | | | | | |
| Lead / Lag | Lead | - | - | Lead | - | - | Lead | - | - | Lead | - | - |
| Minimum Green [s] | 5 | 5 | 0 | 5 | 5 | 0 | 5 | 5 | 0 | 5 | 5 | 0 |
| Maximum Green [s] | 30 | 30 | 0 | 30 | 30 | 0 | 30 | 30 | 0 | 30 | 30 | 0 |
| Amber [s] | 4.4 | 4.4 | 0.0 | 4.4 | 4.4 | 0.0 | 3.7 | 3.7 | 0.0 | 4.4 | 4.4 | 0.0 |
| All red [s] | 1.0 | 1.0 | 0.0 | 1.0 | 1.0 | 0.0 | 1.0 | 1.0 | 0.0 | 1.0 | 1.0 | 0.0 |
| Split [s] | 11 | 57 | 0 | 11 | 57 | 0 | 10 | 41 | 0 | 11 | 42 | 0 |
| Vehicle Extension [s] | 3.0 | 3.0 | 0.0 | 3.0 | 3.0 | 0.0 | 3.0 | 3.0 | 0.0 | 3.0 | 3.0 | 0.0 |
| Walk [s] | 0 | 7 | 0 | 0 | 7 | 0 | 0 | 7 | 0 | 0 | 7 | 0 |
| Pedestrian Clearance [s] | 0 | 24 | 0 | 0 | 24 | 0 | 0 | 29 | 0 | 0 | 29 | 0 |
| I1, Start-Up Lost Time [s] | 2.0 | 2.0 | 0.0 | 2.0 | 2.0 | 0.0 | 2.0 | 2.0 | 0.0 | 2.0 | 2.0 | 0.0 |
| I2, Clearance Lost Time [s] | 3.4 | 3.4 | 0.0 | 3.4 | 3.4 | 0.0 | 2.7 | 2.7 | 0.0 | 3.4 | 3.4 | 0.0 |
| Minimum Recall | No | No | | No | No | | No | No | | No | No | |
| Maximum Recall | No | No | | No | No | | No | No | | No | No | |
| Pedestrian Recall | No | No | | No | No | | No | No | | No | No | |
| Detector Location [ft] | 0.0 | 0.0 | 0.0 | 0.0 | 0.0 | 0.0 | 0.0 | 0.0 | 0.0 | 0.0 | 0.0 | 0.0 |
| Detector Length [ft] | 0.0 | 0.0 | 0.0 | 0.0 | 0.0 | 0.0 | 0.0 | 0.0 | 0.0 | 0.0 | 0.0 | 0.0 |
| I, Upstream Filtering Factor | 1.00 | 1.00 | 1.00 | 1.00 | 1.00 | 1.00 | 1.00 | 1.00 | 1.00 | 1.00 | 1.00 | 1.00 |

**Exclusive Pedestrian Phase**

| | |
|---|---|
| Pedestrian Signal Group | 0 |
| Pedestrian Walk [s] | 0 |
| Pedestrian Clearance [s] | 0 |

**Lane Group Calculations**

| Lane Group | L | C | C | L | C | C | L | C | R | L | C | C |
|---|---|---|---|---|---|---|---|---|---|---|---|---|
| L, Total Lost Time per Cycle [s] | 5.40 | 5.40 | 5.40 | 5.40 | 5.40 | 5.40 | 4.70 | 4.70 | 4.70 | 5.40 | 5.40 | 5.40 |
| l1_p, Permitted Start-Up Lost Time [s] | 0.00 | 0.00 | 0.00 | 0.00 | 0.00 | 0.00 | 0.00 | 0.00 | 0.00 | 0.00 | 0.00 | 0.00 |
| l2, Clearance Lost Time [s] | 3.40 | 3.40 | 3.40 | 3.40 | 3.40 | 3.40 | 2.70 | 2.70 | 2.70 | 3.40 | 3.40 | 3.40 |
| g_i, Effective Green Time [s] | 4 | 79 | 79 | 4 | 79 | 79 | 4 | 13 | 13 | 3 | 13 | 13 |
| g / C, Green / Cycle | 0.03 | 0.65 | 0.65 | 0.03 | 0.66 | 0.66 | 0.03 | 0.11 | 0.11 | 0.03 | 0.11 | 0.11 |
| (v / s)_i Volume / Saturation Flow Rate | 0.02 | 0.30 | 0.30 | 0.03 | 0.24 | 0.24 | 0.02 | 0.09 | 0.04 | 0.02 | 0.05 | 0.05 |
| s, saturation flow rate [veh/h] | 1740 | 1827 | 1792 | 1740 | 1827 | 1799 | 1774 | 1863 | 1583 | 1774 | 1863 | 1678 |
| c, Capacity [veh/h] | 55 | 1195 | 1172 | 57 | 1197 | 1178 | 56 | 205 | 175 | 51 | 200 | 180 |
| d1, Uniform Delay [s] | 57.01 | 3.13 | 3.13 | 56.99 | 2.97 | 2.97 | 57.63 | 52.28 | 49.25 | 57.73 | 50.19 | 50.35 |
| k, delay calibration | 0.11 | 0.50 | 0.50 | 0.11 | 0.50 | 0.50 | 0.11 | 0.11 | 0.11 | 0.11 | 0.11 | 0.11 |
| I, Upstream Filtering Factor | 1.00 | 1.00 | 1.00 | 1.00 | 1.00 | 1.00 | 1.00 | 1.00 | 1.00 | 1.00 | 1.00 | 1.00 |
| d2, Incremental Delay [s] | 18.75 | 1.26 | 1.29 | 19.98 | 0.88 | 0.89 | 16.82 | 8.21 | 1.05 | 14.01 | 1.52 | 1.89 |
| d3, Initial Queue Delay [s] | 0.00 | 0.00 | 0.00 | 0.00 | 0.00 | 0.00 | 0.00 | 0.00 | 0.00 | 0.00 | 0.00 | 0.00 |
| Rp, platoon ratio | 1.33 | 1.33 | 1.33 | 1.33 | 1.33 | 1.33 | 1.00 | 1.00 | 1.00 | 1.00 | 1.00 | 1.00 |
| PF, progression factor | 1.00 | 1.00 | 1.00 | 1.00 | 1.00 | 1.00 | 1.00 | 1.00 | 1.00 | 1.00 | 1.00 | 1.00 |

**Lane Group Results**

| | | | | | | | | | | | | |
|---|---|---|---|---|---|---|---|---|---|---|---|---|
| X, volume / capacity | 0.76 | 0.46 | 0.46 | 0.78 | 0.37 | 0.37 | 0.73 | 0.83 | 0.32 | 0.67 | 0.44 | 0.47 |
| d, Delay for Lane Group [s/veh] | 75.77 | 4.39 | 4.42 | 76.96 | 3.85 | 3.86 | 74.45 | 60.49 | 50.30 | 71.74 | 51.71 | 52.25 |
| Lane Group LOS | E | A | A | E | A | A | E | E | D | E | D | D |
| Critical Lane Group | No | No | Yes | Yes | No | No | No | Yes | No | Yes | No | No |
| 50th-Percentile Queue Length [veh] | 1.52 | 2.26 | 2.23 | 1.60 | 1.74 | 1.72 | 1.50 | 5.48 | 1.61 | 1.21 | 2.53 | 2.45 |
| 50th-Percentile Queue Length [ft] | 38.01 | 56.57 | 55.71 | 40.12 | 43.44 | 42.88 | 37.39 | 136.96 | 40.14 | 30.13 | 63.33 | 61.31 |
| 95th-Percentile Queue Length [veh] | 2.74 | 4.07 | 4.01 | 2.89 | 3.13 | 3.09 | 2.69 | 9.32 | 2.89 | 2.17 | 4.56 | 4.41 |
| 95th-Percentile Queue Length [ft] | 68.43 | 101.83 | 100.29 | 72.22 | 78.19 | 77.18 | 67.29 | 232.93 | 72.25 | 54.24 | 113.99 | 110.36 |

**Movement, Approach, & Intersection Results**

| | | | | | | | | | | | | |
|---|---|---|---|---|---|---|---|---|---|---|---|---|
| d_M, Delay for Movement [s/veh] | 75.77 | 4.41 | 4.42 | 76.96 | 3.85 | 3.86 | 74.45 | 60.49 | 50.30 | 71.74 | 51.85 | 52.25 |
| Movement LOS | E | A | A | E | A | A | E | E | D | E | D | D |
| d_A, Approach Delay [s/veh] | 7.07 | | | 7.34 | | | 60.49 | | | 55.22 | | |
| Approach LOS | A | | | A | | | E | | | E | | |
| d_I, Intersection Delay [s/veh] | 16.78 | | | | | | | | | | | |
| Intersection LOS | B | | | | | | | | | | | |
| Intersection V/C | 0.502 | | | | | | | | | | | |

## Sequence

| | | | | | | | | | | | | | | | | |
|---|---|---|---|---|---|---|---|---|---|---|---|---|---|---|---|---|
| Ring 1 | 1 | 2 | 3 | 4 | - | - | - | - | - | - | - | - | - | - | - | - |
| Ring 2 | 5 | 6 | 7 | 8 | - | - | - | - | - | - | - | - | - | - | - | - |
| Ring 3 | - | - | - | - | - | - | - | - | - | - | - | - | - | - | - | - |
| Ring 4 | - | - | - | - | - | - | - | - | - | - | - | - | - | - | - | - |

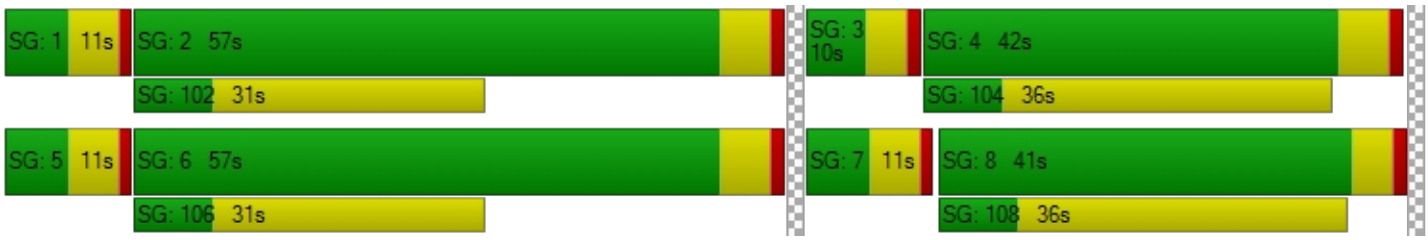

**Intersection Level Of Service Report**
**Intersection 12: Cedar Ave (NS) / Bloomington Ave (EW)**

| | | | |
|---|---|---|---|
| Control Type: | Signalized | Delay (sec / veh): | 12.2 |
| Analysis Method: | HCM 2010 | Level Of Service: | B |
| Analysis Period: | 15 minutes | Volume to Capacity (v/c): | 0.454 |

**Intersection Setup**

| Name | Cedar Avenue | | Cedar Avenue | | Bloomington Avenue | |
|---|---|---|---|---|---|---|
| Approach | Northbound | | Southbound | | Westbound | |
| Lane Configuration | | | | | | |
| Turning Movement | Thru | Right | Left | Thru | Left | Right |
| Lane Width [ft] | 12.00 | 12.00 | 12.00 | 12.00 | 12.00 | 12.00 |
| No. of Lanes in Pocket | 0 | 0 | 1 | 0 | 0 | 1 |
| Pocket Length [ft] | 100.00 | 100.00 | 100.00 | 100.00 | 100.00 | 125.00 |
| Speed [mph] | 40.00 | | 40.00 | | 45.00 | |
| Grade [%] | 0.00 | | 0.00 | | 0.00 | |
| Crosswalk | No | | Yes | | No | |

**volumes**

| Name | Cedar Avenue | | Cedar Avenue | | Bloomington Avenue | |
|---|---|---|---|---|---|---|
| Base Volume Input [veh/h] | 959 | 439 | 75 | 749 | 276 | 54 |
| Base Volume Adjustment Factor | 1.0000 | 0.0000 | 1.0000 | 1.0000 | 1.0000 | 1.0000 |
| Heavy Vehicles Percentage [%] | 4.00 | 4.00 | 4.00 | 4.00 | 4.00 | 4.00 |
| Growth Rate | 1.00 | 1.00 | 1.00 | 1.00 | 1.00 | 1.00 |
| In-Process Volume [veh/h] | 0 | 0 | 0 | 0 | 0 | 0 |
| Site-Generated Trips [veh/h] | 0 | 0 | 0 | 0 | 0 | 0 |
| Diverted Trips [veh/h] | 0 | 0 | 0 | 0 | 0 | 0 |
| Pass-by Trips [veh/h] | 0 | 0 | 0 | 0 | 0 | 0 |
| Existing Site Adjustment Volume [veh/h] | 0 | 0 | 0 | 0 | 0 | 0 |
| Other Volume [veh/h] | 0 | 0 | 0 | 0 | 0 | 0 |
| Right-Turn on Red Volume [veh/h] | 0 | 0 | 0 | 0 | 0 | 0 |
| Total Hourly Volume [veh/h] | 959 | 0 | 75 | 749 | 276 | 54 |
| Peak Hour Factor | 0.9480 | 0.9480 | 0.9480 | 0.9480 | 0.9480 | 0.9480 |
| Other Adjustment Factor | 1.0000 | 1.0000 | 1.0000 | 1.0000 | 1.0000 | 1.0000 |
| Total 15-Minute Volume [veh/h] | 253 | 0 | 20 | 198 | 73 | 14 |
| Total Analysis Volume [veh/h] | 1012 | 0 | 79 | 790 | 291 | 57 |
| Presence of On-Street Parking | No | No | No | No | No | No |
| On-Street Parking Maneuver Rate [/h] | 0 | 0 | 0 | 0 | 0 | 0 |
| Local Bus Stopping Rate [/h] | 0 | 0 | 0 | 0 | 0 | 0 |
| Pedestrian Volume [ped/h] | 0 | | 0 | | 0 | |
| Bicycle Volume [bicycles/h] | 0 | | 0 | | 0 | |

**Intersection Settings**

| | |
|---|---|
| Located in CBD | No |
| Signal Coordination Group | 2 - NS - Cedar |
| Cycle Length [s] | 120 |
| Coordination Type | Time of Day Pattern Coordinated |
| Actuation Type | Fully actuated |
| Offset [s] | 82.0 |
| Offset Reference | LagFO |
| Permissive Mode | SingleBand |
| Lost time [s] | 12.00 |

**Phasing & Timing**

| Control Type | Permissive | Permissive | Protected | Permissive | Split | Split |
|---|---|---|---|---|---|---|
| Signal group | 2 | 0 | 1 | 6 | 7 | 0 |
| Auxiliary Signal Groups | | | | | | |
| Lead / Lag | - | - | Lead | - | Lead | - |
| Minimum Green [s] | 5 | 0 | 5 | 5 | 5 | 0 |
| Maximum Green [s] | 30 | 0 | 30 | 30 | 30 | 0 |
| Amber [s] | 4.4 | 0.0 | 4.4 | 4.4 | 4.8 | 0.0 |
| All red [s] | 1.0 | 0.0 | 1.0 | 1.0 | 1.0 | 0.0 |
| Split [s] | 64 | 0 | 20 | 84 | 36 | 0 |
| Vehicle Extension [s] | 3.0 | 0.0 | 3.0 | 3.0 | 3.0 | 0.0 |
| Walk [s] | 7 | 0 | 0 | 7 | 7 | 0 |
| Pedestrian Clearance [s] | 10 | 0 | 0 | 10 | 23 | 0 |
| I1, Start-Up Lost Time [s] | 2.0 | 0.0 | 2.0 | 2.0 | 2.0 | 0.0 |
| I2, Clearance Lost Time [s] | 3.4 | 0.0 | 3.4 | 3.4 | 3.8 | 0.0 |
| Minimum Recall | No | | No | No | No | |
| Maximum Recall | No | | No | No | No | |
| Pedestrian Recall | No | | No | No | No | |
| Detector Location [ft] | 0.0 | 0.0 | 0.0 | 0.0 | 0.0 | 0.0 |
| Detector Length [ft] | 0.0 | 0.0 | 0.0 | 0.0 | 0.0 | 0.0 |
| I, Upstream Filtering Factor | 1.00 | 1.00 | 1.00 | 1.00 | 1.00 | 1.00 |

**Exclusive Pedestrian Phase**

| | |
|---|---|
| Pedestrian Signal Group | 0 |
| Pedestrian Walk [s] | 0 |
| Pedestrian Clearance [s] | 0 |

**Lane Group Calculations**

| Lane Group | C | C | R | L | C | L | R |
|---|---|---|---|---|---|---|---|
| L, Total Lost Time per Cycle [s] | 5.40 | 5.40 | 5.40 | 5.40 | 5.40 | 5.80 | 5.80 |
| l1_p, Permitted Start-Up Lost Time [s] | 0.00 | 0.00 | 0.00 | 0.00 | 0.00 | 0.00 | 0.00 |
| l2, Clearance Lost Time [s] | 3.40 | 3.40 | 3.40 | 3.40 | 3.40 | 3.80 | 3.80 |
| g_i, Effective Green Time [s] | 84 | 84 | 84 | 7 | 96 | 13 | 13 |
| g / C, Green / Cycle | 0.70 | 0.70 | 0.70 | 0.06 | 0.80 | 0.11 | 0.11 |
| (v / s)_i Volume / Saturation Flow Rate | 0.28 | 0.28 | 0.00 | 0.05 | 0.23 | 0.09 | 0.04 |
| s, saturation flow rate [veh/h] | 1827 | 1827 | 1553 | 1740 | 3478 | 3379 | 1553 |
| c, Capacity [veh/h] | 1272 | 1272 | 1081 | 100 | 2778 | 365 | 168 |
| d1, Uniform Delay [s] | 1.45 | 1.45 | 0.00 | 54.67 | 0.00 | 52.21 | 49.54 |
| k, delay calibration | 0.50 | 0.50 | 0.50 | 0.11 | 0.50 | 0.11 | 0.11 |
| I, Upstream Filtering Factor | 1.00 | 1.00 | 1.00 | 1.00 | 1.00 | 1.00 | 1.00 |
| d2, Incremental Delay [s] | 0.93 | 0.93 | 0.00 | 12.80 | 0.26 | 4.00 | 1.19 |
| d3, Initial Queue Delay [s] | 0.00 | 0.00 | 0.00 | 0.00 | 0.00 | 0.00 | 0.00 |
| Rp, platoon ratio | 1.33 | 1.33 | 1.33 | 1.33 | 1.33 | 1.00 | 1.00 |
| PF, progression factor | 1.00 | 1.00 | 1.00 | 1.00 | 1.00 | 1.00 | 1.00 |

**Lane Group Results**

| | | | | | | | |
|---|---|---|---|---|---|---|---|
| X, volume / capacity | 0.40 | 0.40 | 0.00 | 0.79 | 0.28 | 0.80 | 0.34 |
| d, Delay for Lane Group [s/veh] | 2.38 | 2.38 | 0.00 | 67.47 | 0.26 | 56.21 | 50.72 |
| Lane Group LOS | A | A | A | E | A | E | D |
| Critical Lane Group | Yes | No | No | Yes | No | Yes | No |
| 50th-Percentile Queue Length [veh] | 1.20 | 1.20 | 0.00 | 2.63 | 0.10 | 4.37 | 1.60 |
| 50th-Percentile Queue Length [ft] | 29.97 | 29.97 | 0.00 | 65.76 | 2.48 | 109.20 | 40.08 |
| 95th-Percentile Queue Length [veh] | 2.16 | 2.16 | 0.00 | 4.73 | 0.18 | 7.80 | 2.89 |
| 95th-Percentile Queue Length [ft] | 53.94 | 53.94 | 0.00 | 118.36 | 4.47 | 194.89 | 72.15 |

**Movement, Approach, & Intersection Results**

| | | | | | | |
|---|---|---|---|---|---|---|
| d_M, Delay for Movement [s/veh] | 2.38 | 1.19 | 67.47 | 0.26 | 56.21 | 50.72 |
| Movement LOS | A | A | E | A | E | D |
| d_A, Approach Delay [s/veh] | 2.38 | | 6.37 | | 55.31 | |
| Approach LOS | A | | A | | E | |
| d_I, Intersection Delay [s/veh] | 12.20 | | | | | |
| Intersection LOS | B | | | | | |
| Intersection V/C | 0.454 | | | | | |

## Sequence

| | | | | | | | | | | | | | | | | |
|---|---|---|---|---|---|---|---|---|---|---|---|---|---|---|---|---|
| Ring 1 | 1 | 2 | - | - | - | - | - | - | - | - | - | - | - | - | - | - |
| Ring 2 | - | 6 | 7 | - | - | - | - | - | - | - | - | - | - | - | - | - |
| Ring 3 | - | - | - | - | - | - | - | - | - | - | - | - | - | - | - | - |
| Ring 4 | - | - | - | - | - | - | - | - | - | - | - | - | - | - | - | - |

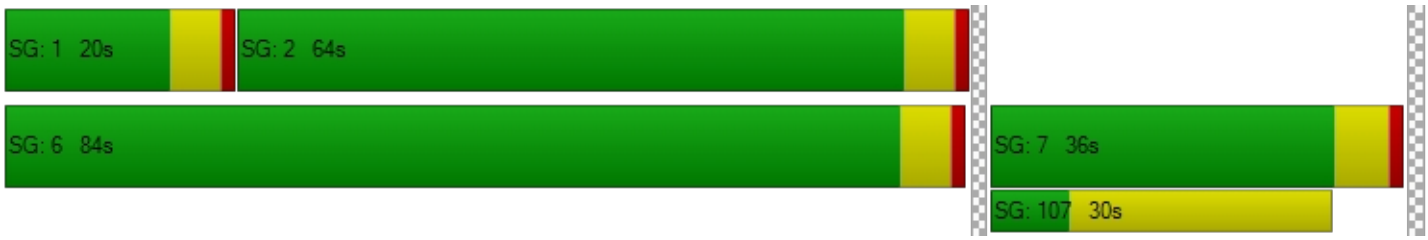

**Intersection Level Of Service Report**
**Intersection 13: Cedar Ave (NS) / Valley Blvd (EW)**

| | | | |
|---|---|---|---|
| Control Type: | Signalized | Delay (sec / veh): | 32.5 |
| Analysis Method: | HCM 2010 | Level Of Service: | C |
| Analysis Period: | 15 minutes | Volume to Capacity (v/c): | 0.733 |

**Intersection Setup**

| Name | Cedar Avenue | | | Cedar Avenue | | | | | | Valley Boulevard | | |
|---|---|---|---|---|---|---|---|---|---|---|---|---|
| Approach | Northbound | | | Southbound | | | Eastbound | | | Westbound | | |
| Lane Configuration | | | | | | | | | | | | |
| Turning Movement | Left | Thru | Right | Left | Thru | Right | Left | Thru | Right | Left | Thru | Right |
| Lane Width [ft] | 12.00 | 12.00 | 12.00 | 12.00 | 12.00 | 12.00 | 12.00 | 12.00 | 12.00 | 12.00 | 12.00 | 12.00 |
| No. of Lanes in Pocket | 2 | 0 | 1 | 2 | 0 | 0 | 2 | 0 | 1 | 2 | 0 | 0 |
| Pocket Length [ft] | 235.00 | 100.00 | 100.00 | 155.00 | 100.00 | 100.00 | 300.00 | 100.00 | 300.00 | 375.00 | 100.00 | 100.00 |
| Speed [mph] | 40.00 | | | 40.00 | | | 30.00 | | | 40.00 | | |
| Grade [%] | 0.00 | | | 0.00 | | | 0.00 | | | 0.00 | | |
| Crosswalk | Yes | | | Yes | | | Yes | | | Yes | | |

**volumes**

| Name | Cedar Avenue | | | Cedar Avenue | | | | | | Valley Boulevard | | |
|---|---|---|---|---|---|---|---|---|---|---|---|---|
| Base Volume Input [veh/h] | 441 | 1189 | 202 | 101 | 790 | 73 | 188 | 325 | 513 | 228 | 262 | 69 |
| Base Volume Adjustment Factor | 1.0000 | 1.0000 | 1.0000 | 1.0000 | 1.0000 | 1.0000 | 1.0000 | 1.0000 | 1.0000 | 1.0000 | 1.0000 | 1.0000 |
| Heavy Vehicles Percentage [%] | 5.00 | 5.00 | 5.00 | 4.00 | 4.00 | 4.00 | 4.00 | 4.00 | 4.00 | 4.00 | 4.00 | 4.00 |
| Growth Rate | 1.00 | 1.00 | 1.00 | 1.00 | 1.00 | 1.00 | 1.00 | 1.00 | 1.00 | 1.00 | 1.00 | 1.00 |
| In-Process Volume [veh/h] | 0 | 0 | 0 | 0 | 0 | 0 | 0 | 0 | 0 | 0 | 0 | 0 |
| Site-Generated Trips [veh/h] | 0 | 0 | 0 | 0 | 0 | 0 | 0 | 0 | 0 | 0 | 0 | 0 |
| Diverted Trips [veh/h] | 0 | 0 | 0 | 0 | 0 | 0 | 0 | 0 | 0 | 0 | 0 | 0 |
| Pass-by Trips [veh/h] | 0 | 0 | 0 | 0 | 0 | 0 | 0 | 0 | 0 | 0 | 0 | 0 |
| Existing Site Adjustment Volume [veh/h] | 0 | 0 | 0 | 0 | 0 | 0 | 0 | 0 | 0 | 0 | 0 | 0 |
| Other Volume [veh/h] | 0 | 0 | 0 | 0 | 0 | 0 | 0 | 0 | 0 | 0 | 0 | 0 |
| Right-Turn on Red Volume [veh/h] | 0 | 0 | 0 | 0 | 0 | 0 | 0 | 0 | 0 | 0 | 0 | 0 |
| Total Hourly Volume [veh/h] | 441 | 1189 | 202 | 101 | 790 | 73 | 188 | 325 | 513 | 228 | 262 | 69 |
| Peak Hour Factor | 0.9760 | 0.9760 | 0.9760 | 0.9760 | 0.9760 | 0.9760 | 0.9760 | 0.9760 | 0.9760 | 0.9760 | 0.9760 | 0.9760 |
| Other Adjustment Factor | 1.0000 | 1.0000 | 1.0000 | 1.0000 | 1.0000 | 1.0000 | 1.0000 | 1.0000 | 1.0000 | 1.0000 | 1.0000 | 1.0000 |
| Total 15-Minute Volume [veh/h] | 113 | 305 | 52 | 26 | 202 | 19 | 48 | 83 | 131 | 58 | 67 | 18 |
| Total Analysis Volume [veh/h] | 452 | 1218 | 207 | 103 | 809 | 75 | 193 | 333 | 526 | 234 | 268 | 71 |
| Presence of On-Street Parking | No | | No | No | | No | No | | No | No | | No |
| On-Street Parking Maneuver Rate [/h] | 0 | 0 | 0 | 0 | 0 | 0 | 0 | 0 | 0 | 0 | 0 | 0 |
| Local Bus Stopping Rate [/h] | 0 | 0 | 0 | 0 | 0 | 0 | 0 | 0 | 0 | 0 | 0 | 0 |
| Pedestrian Volume [ped/h] | 0 | | | 0 | | | 0 | | | 0 | | |
| Bicycle Volume [bicycles/h] | 0 | | | 0 | | | 0 | | | 0 | | |

**Intersection Settings**

| | |
|---|---|
| Located in CBD | No |
| Signal Coordination Group | 2 - NS - Cedar |
| Cycle Length [s] | 120 |
| Coordination Type | Time of Day Pattern Coordinated |
| Actuation Type | Fully actuated |
| Offset [s] | 73.0 |
| Offset Reference | LagFO |
| Permissive Mode | SingleBand |
| Lost time [s] | 16.00 |

**Phasing & Timing**

| Control Type | Protecte | Permiss | Overlap | Protecte | Permiss | Permiss | Protecte | Permiss | Overlap | Protecte | Permiss | Permiss |
|---|---|---|---|---|---|---|---|---|---|---|---|---|
| Signal group | 5 | 2 | 2 | 1 | 6 | 0 | 3 | 8 | 8 | 7 | 4 | 0 |
| Auxiliary Signal Groups | | | 2 | | | | | | 5,8 | | | |
| Lead / Lag | Lead | - | - | Lead | - | - | Lead | - | - | Lead | - | - |
| Minimum Green [s] | 5 | 5 | 5 | 5 | 5 | 0 | 5 | 5 | 5 | 5 | 5 | 0 |
| Maximum Green [s] | 30 | 30 | 30 | 30 | 30 | 0 | 30 | 30 | 30 | 30 | 30 | 0 |
| Amber [s] | 4.4 | 4.4 | 4.4 | 4.4 | 4.4 | 0.0 | 3.7 | 3.7 | 3.7 | 4.4 | 4.4 | 0.0 |
| All red [s] | 1.0 | 1.0 | 1.0 | 1.0 | 1.0 | 0.0 | 1.0 | 1.0 | 1.0 | 1.0 | 1.0 | 0.0 |
| Split [s] | 22 | 54 | 54 | 11 | 43 | 0 | 14 | 41 | 41 | 14 | 41 | 0 |
| Vehicle Extension [s] | 3.0 | 3.0 | 3.0 | 3.0 | 3.0 | 0.0 | 3.0 | 3.0 | 3.0 | 3.0 | 3.0 | 0.0 |
| Walk [s] | 0 | 7 | 7 | 0 | 7 | 0 | 0 | 7 | 7 | 0 | 7 | 0 |
| Pedestrian Clearance [s] | 0 | 28 | 28 | 0 | 27 | 0 | 0 | 29 | 29 | 0 | 28 | 0 |
| I1, Start-Up Lost Time [s] | 2.0 | 2.0 | 2.0 | 2.0 | 2.0 | 0.0 | 2.0 | 2.0 | 2.0 | 2.0 | 2.0 | 0.0 |
| I2, Clearance Lost Time [s] | 3.4 | 3.4 | 3.4 | 3.4 | 3.4 | 0.0 | 2.7 | 2.7 | 2.7 | 3.4 | 3.4 | 0.0 |
| Minimum Recall | No | No | No | No | No | | No | No | No | No | No | |
| Maximum Recall | No | No | No | No | No | | No | No | No | No | No | |
| Pedestrian Recall | No | No | No | No | No | | No | No | No | No | No | |
| Detector Location [ft] | 0.0 | 0.0 | 0.0 | 0.0 | 0.0 | 0.0 | 0.0 | 0.0 | 0.0 | 0.0 | 0.0 | 0.0 |
| Detector Length [ft] | 0.0 | 0.0 | 0.0 | 0.0 | 0.0 | 0.0 | 0.0 | 0.0 | 0.0 | 0.0 | 0.0 | 0.0 |
| I, Upstream Filtering Factor | 1.00 | 1.00 | 1.00 | 1.00 | 1.00 | 1.00 | 1.00 | 1.00 | 1.00 | 1.00 | 1.00 | 1.00 |

**Exclusive Pedestrian Phase**

| | |
|---|---|
| Pedestrian Signal Group | 0 |
| Pedestrian Walk [s] | 0 |
| Pedestrian Clearance [s] | 0 |

**Lane Group Calculations**

| Lane Group | L | C | R | L | C | C | L | C | R | L | C | C |
|---|---|---|---|---|---|---|---|---|---|---|---|---|
| L, Total Lost Time per Cycle [s] | 5.40 | 5.40 | 5.40 | 5.40 | 5.40 | 5.40 | 4.70 | 4.70 | 5.40 | 5.40 | 5.40 | 5.40 |
| l1_p, Permitted Start-Up Lost Time [s] | 0.00 | 0.00 | 0.00 | 0.00 | 0.00 | 0.00 | 0.00 | 0.00 | 0.00 | 0.00 | 0.00 | 0.00 |
| l2, Clearance Lost Time [s] | 3.40 | 3.40 | 3.40 | 3.40 | 3.40 | 3.40 | 2.70 | 2.70 | 0.00 | 3.40 | 3.40 | 3.40 |
| g_i, Effective Green Time [s] | 17 | 60 | 60 | 5 | 49 | 49 | 9 | 25 | 46 | 9 | 25 | 25 |
| g / C, Green / Cycle | 0.14 | 0.50 | 0.50 | 0.05 | 0.41 | 0.41 | 0.07 | 0.21 | 0.39 | 0.07 | 0.21 | 0.21 |
| (v / s)_i Volume / Saturation Flow Rate | 0.14 | 0.35 | 0.13 | 0.03 | 0.17 | 0.17 | 0.06 | 0.18 | 0.19 | 0.07 | 0.10 | 0.10 |
| s, saturation flow rate [veh/h] | 3347 | 3445 | 1538 | 3379 | 3478 | 1749 | 3379 | 1827 | 2749 | 3379 | 1827 | 1697 |
| c, Capacity [veh/h] | 464 | 1721 | 768 | 155 | 1414 | 711 | 247 | 381 | 1061 | 244 | 379 | 352 |
| d1, Uniform Delay [s] | 48.72 | 14.51 | 11.13 | 55.48 | 19.05 | 19.07 | 53.23 | 41.87 | 21.51 | 54.07 | 37.87 | 37.92 |
| k, delay calibration | 0.11 | 0.50 | 0.50 | 0.11 | 0.50 | 0.50 | 0.11 | 0.16 | 0.17 | 0.11 | 0.11 | 0.11 |
| I, Upstream Filtering Factor | 1.00 | 1.00 | 1.00 | 1.00 | 1.00 | 1.00 | 1.00 | 1.00 | 1.00 | 1.00 | 1.00 | 1.00 |
| d2, Incremental Delay [s] | 14.17 | 2.48 | 0.86 | 4.86 | 0.90 | 1.80 | 5.29 | 9.01 | 0.55 | 18.34 | 0.87 | 0.96 |
| d3, Initial Queue Delay [s] | 0.00 | 0.00 | 0.00 | 0.00 | 0.00 | 0.00 | 0.00 | 0.00 | 0.00 | 0.00 | 0.00 | 0.00 |
| Rp, platoon ratio | 1.33 | 1.33 | 1.33 | 1.33 | 1.33 | 1.33 | 1.33 | 1.33 | 1.33 | 1.33 | 1.33 | 1.33 |
| PF, progression factor | 1.00 | 1.00 | 1.00 | 1.00 | 1.00 | 1.00 | 1.00 | 1.00 | 1.00 | 1.00 | 1.00 | 1.00 |

**Lane Group Results**

| | | | | | | | | | | | | |
|---|---|---|---|---|---|---|---|---|---|---|---|---|
| X, volume / capacity | 0.97 | 0.71 | 0.27 | 0.67 | 0.42 | 0.42 | 0.78 | 0.87 | 0.50 | 0.96 | 0.46 | 0.47 |
| d, Delay for Lane Group [s/veh] | 62.89 | 17.00 | 11.99 | 60.35 | 19.95 | 20.87 | 58.53 | 50.88 | 22.06 | 72.41 | 38.74 | 38.88 |
| Lane Group LOS | E | B | B | E | B | C | E | D | C | E | D | D |
| Critical Lane Group | No | Yes | No | Yes | No | No | No | Yes | No | Yes | No | No |
| 50th-Percentile Queue Length [veh] | 7.18 | 8.26 | 2.20 | 1.59 | 4.45 | 4.68 | 2.97 | 9.86 | 4.44 | 4.00 | 4.13 | 3.89 |
| 50th-Percentile Queue Length [ft] | 179.51 | 206.46 | 55.07 | 39.83 | 111.37 | 116.98 | 74.27 | 246.41 | 110.99 | 99.91 | 103.18 | 97.33 |
| 95th-Percentile Queue Length [veh] | 11.58 | 12.97 | 3.97 | 2.87 | 7.92 | 8.23 | 5.35 | 15.01 | 7.89 | 7.19 | 7.43 | 7.01 |
| 95th-Percentile Queue Length [ft] | 289.38 | 324.28 | 99.13 | 71.70 | 197.90 | 205.67 | 133.69 | 375.13 | 197.37 | 179.84 | 185.73 | 175.20 |

**Movement, Approach, & Intersection Results**

| | | | | | | | | | | | | |
|---|---|---|---|---|---|---|---|---|---|---|---|---|
| d_M, Delay for Movement [s/veh] | 62.89 | 17.00 | 11.99 | 60.35 | 20.20 | 20.87 | 58.53 | 50.88 | 22.06 | 72.41 | 38.79 | 38.88 |
| Movement LOS | E | B | B | E | C | C | E | D | C | E | D | D |
| d_A, Approach Delay [s/veh] | 27.50 | | | 24.44 | | | 37.87 | | | 52.53 | | |
| Approach LOS | C | | | C | | | D | | | D | | |
| d_I, Intersection Delay [s/veh] | 32.45 | | | | | | | | | | | |
| Intersection LOS | C | | | | | | | | | | | |
| Intersection V/C | 0.733 | | | | | | | | | | | |

## Sequence

| | | | | | | | | | | | | | | | | |
|---|---|---|---|---|---|---|---|---|---|---|---|---|---|---|---|---|
| Ring 1 | 1 | 2 | 3 | 4 | - | - | - | - | - | - | - | - | - | - | - | - |
| Ring 2 | 5 | 6 | 7 | 8 | - | - | - | - | - | - | - | - | - | - | - | - |
| Ring 3 | - | - | - | - | - | - | - | - | - | - | - | - | - | - | - | - |
| Ring 4 | - | - | - | - | - | - | - | - | - | - | - | - | - | - | - | - |

**Intersection Level Of Service Report**
**Intersection 14: Cedar Ave (NS) / I-10 Westbound Ramps (EW)**

| | | | |
|---|---|---|---|
| Control Type: | Signalized | Delay (sec / veh): | 33.2 |
| Analysis Method: | HCM 2010 | Level Of Service: | C |
| Analysis Period: | 15 minutes | Volume to Capacity (v/c): | 0.772 |

**Intersection Setup**

| Name | Cedar Avenue | | | Cedar Avenue | | | | | | I-10 Westbound Ramps | | |
|---|---|---|---|---|---|---|---|---|---|---|---|---|
| Approach | Northbound | | | Southbound | | | Eastbound | | | Westbound | | |
| Lane Configuration | | | | | | | | | | | | |
| Turning Movement | Left | Thru | Right | Left | Thru | Right | Left | Thru | Right | Left | Thru | Right |
| Lane Width [ft] | 12.00 | 12.00 | 12.00 | 12.00 | 12.00 | 12.00 | 12.00 | 12.00 | 12.00 | 12.00 | 12.00 | 12.00 |
| No. of Lanes in Pocket | 1 | 0 | 0 | 0 | 0 | 1 | 0 | 0 | 0 | 0 | 0 | 1 |
| Pocket Length [ft] | 305.00 | 100.00 | 100.00 | 100.00 | 100.00 | 100.00 | 100.00 | 100.00 | 100.00 | 100.00 | 100.00 | 485.00 |
| Speed [mph] | 40.00 | | | 40.00 | | | 30.00 | | | 30.00 | | |
| Grade [%] | 0.00 | | | 0.00 | | | 0.00 | | | 0.00 | | |
| Crosswalk | No | | | No | | | Yes | | | Yes | | |

**volumes**

| Name | Cedar Avenue | | | Cedar Avenue | | | | | | I-10 Westbound Ramps | | |
|---|---|---|---|---|---|---|---|---|---|---|---|---|
| Base Volume Input [veh/h] | 214 | 1312 | 0 | 0 | 1075 | 419 | 0 | 0 | 0 | 310 | 3 | 476 |
| Base Volume Adjustment Factor | 1.0000 | 1.0000 | 1.0000 | 1.0000 | 1.0000 | 1.0000 | 1.0000 | 1.0000 | 1.0000 | 1.0000 | 1.0000 | 1.0000 |
| Heavy Vehicles Percentage [%] | 5.00 | 5.00 | 2.00 | 2.00 | 5.00 | 5.00 | 2.00 | 2.00 | 2.00 | 6.00 | 6.00 | 6.00 |
| Growth Rate | 1.00 | 1.00 | 1.00 | 1.00 | 1.00 | 1.00 | 1.00 | 1.00 | 1.00 | 1.00 | 1.00 | 1.00 |
| In-Process Volume [veh/h] | 0 | 0 | 0 | 0 | 0 | 0 | 0 | 0 | 0 | 0 | 0 | 0 |
| Site-Generated Trips [veh/h] | 0 | 0 | 0 | 0 | 0 | 0 | 0 | 0 | 0 | 0 | 0 | 0 |
| Diverted Trips [veh/h] | 0 | 0 | 0 | 0 | 0 | 0 | 0 | 0 | 0 | 0 | 0 | 0 |
| Pass-by Trips [veh/h] | 0 | 0 | 0 | 0 | 0 | 0 | 0 | 0 | 0 | 0 | 0 | 0 |
| Existing Site Adjustment Volume [veh/h] | 0 | 0 | 0 | 0 | 0 | 0 | 0 | 0 | 0 | 0 | 0 | 0 |
| Other Volume [veh/h] | 0 | 0 | 0 | 0 | 0 | 0 | 0 | 0 | 0 | 0 | 0 | 0 |
| Right-Turn on Red Volume [veh/h] | 0 | 0 | 0 | 0 | 0 | 0 | 0 | 0 | 0 | 0 | 0 | 0 |
| Total Hourly Volume [veh/h] | 214 | 1312 | 0 | 0 | 1075 | 419 | 0 | 0 | 0 | 310 | 3 | 476 |
| Peak Hour Factor | 0.9350 | 0.9350 | 1.0000 | 1.0000 | 0.9350 | 0.9350 | 1.0000 | 1.0000 | 1.0000 | 0.9350 | 0.9350 | 0.9350 |
| Other Adjustment Factor | 1.0000 | 1.0000 | 1.0000 | 1.0000 | 1.0000 | 1.0000 | 1.0000 | 1.0000 | 1.0000 | 1.0000 | 1.0000 | 1.0000 |
| Total 15-Minute Volume [veh/h] | 57 | 351 | 0 | 0 | 287 | 112 | 0 | 0 | 0 | 83 | 1 | 127 |
| Total Analysis Volume [veh/h] | 229 | 1403 | 0 | 0 | 1150 | 448 | 0 | 0 | 0 | 332 | 3 | 509 |
| Presence of On-Street Parking | No | | No | No | | No | | | | No | | No |
| On-Street Parking Maneuver Rate [/h] | 0 | 0 | 0 | 0 | 0 | 0 | 0 | 0 | 0 | 0 | 0 | 0 |
| Local Bus Stopping Rate [/h] | 0 | 0 | 0 | 0 | 0 | 0 | 0 | 0 | 0 | 0 | 0 | 0 |
| Pedestrian Volume [ped/h] | 0 | | | 0 | | | 0 | | | 0 | | |
| Bicycle Volume [bicycles/h] | 0 | | | 0 | | | 0 | | | 0 | | |

**Intersection Settings**

| | |
|---|---|
| Located in CBD | No |
| Signal Coordination Group | 2 - NS - Cedar |
| Cycle Length [s] | 120 |
| Coordination Type | Time of Day Pattern Coordinated |
| Actuation Type | Fully actuated |
| Offset [s] | 82.0 |
| Offset Reference | LagFO |
| Permissive Mode | SingleBand |
| Lost time [s] | 12.00 |

**Phasing & Timing**

| Control Type | Protecte | Permiss | Permiss | Permiss | Permiss | Permiss | Permiss | Permiss | Permiss | Permiss | Permiss | Permiss |
|---|---|---|---|---|---|---|---|---|---|---|---|---|
| Signal group | 5 | 2 | 0 | 0 | 6 | 0 | 0 | 0 | 0 | 0 | 4 | 0 |
| Auxiliary Signal Groups | | | | | | | | | | | | |
| Lead / Lag | Lead | - | - | - | - | - | - | - | - | - | - | - |
| Minimum Green [s] | 5 | 5 | 0 | 0 | 5 | 0 | 0 | 0 | 0 | 0 | 5 | 0 |
| Maximum Green [s] | 30 | 30 | 0 | 0 | 30 | 0 | 0 | 0 | 0 | 0 | 30 | 0 |
| Amber [s] | 4.4 | 4.4 | 0.0 | 0.0 | 4.4 | 0.0 | 0.0 | 0.0 | 0.0 | 0.0 | 3.7 | 0.0 |
| All red [s] | 1.0 | 1.0 | 0.0 | 0.0 | 1.0 | 0.0 | 0.0 | 0.0 | 0.0 | 0.0 | 1.0 | 0.0 |
| Split [s] | 23 | 78 | 0 | 0 | 55 | 0 | 0 | 0 | 0 | 0 | 42 | 0 |
| Vehicle Extension [s] | 3.0 | 3.0 | 0.0 | 0.0 | 3.0 | 0.0 | 0.0 | 0.0 | 0.0 | 0.0 | 3.0 | 0.0 |
| Walk [s] | 0 | 7 | 0 | 0 | 7 | 0 | 0 | 0 | 0 | 0 | 7 | 0 |
| Pedestrian Clearance [s] | 0 | 17 | 0 | 0 | 17 | 0 | 0 | 0 | 0 | 0 | 10 | 0 |
| I1, Start-Up Lost Time [s] | 2.0 | 2.0 | 0.0 | 0.0 | 2.0 | 0.0 | 0.0 | 0.0 | 0.0 | 0.0 | 2.0 | 0.0 |
| I2, Clearance Lost Time [s] | 3.4 | 3.4 | 0.0 | 0.0 | 3.4 | 0.0 | 0.0 | 0.0 | 0.0 | 0.0 | 2.7 | 0.0 |
| Minimum Recall | No | No | | | No | | | | | | No | |
| Maximum Recall | No | No | | | No | | | | | | No | |
| Pedestrian Recall | No | No | | | No | | | | | | No | |
| Detector Location [ft] | 0.0 | 0.0 | 0.0 | 0.0 | 0.0 | 0.0 | 0.0 | 0.0 | 0.0 | 0.0 | 0.0 | 0.0 |
| Detector Length [ft] | 0.0 | 0.0 | 0.0 | 0.0 | 0.0 | 0.0 | 0.0 | 0.0 | 0.0 | 0.0 | 0.0 | 0.0 |
| I, Upstream Filtering Factor | 1.00 | 1.00 | 1.00 | 1.00 | 1.00 | 1.00 | 1.00 | 1.00 | 1.00 | 1.00 | 1.00 | 1.00 |

**Exclusive Pedestrian Phase**

| | |
|---|---|
| Pedestrian Signal Group | 0 |
| Pedestrian Walk [s] | 0 |
| Pedestrian Clearance [s] | 0 |

**Lane Group Calculations**

| Lane Group | L | C | C | R | | C | R |
|---|---|---|---|---|---|---|---|
| L, Total Lost Time per Cycle [s] | 5.40 | 5.40 | 5.40 | 5.40 | | 4.70 | 4.70 |
| l1_p, Permitted Start-Up Lost Time [s] | 0.00 | 0.00 | 0.00 | 0.00 | | 0.00 | 0.00 |
| l2, Clearance Lost Time [s] | 3.40 | 3.40 | 3.40 | 3.40 | | 2.70 | 2.70 |
| g_i, Effective Green Time [s] | 18 | 75 | 52 | 52 | | 35 | 35 |
| g / C, Green / Cycle | 0.15 | 0.63 | 0.43 | 0.43 | | 0.29 | 0.29 |
| (v / s)_i Volume / Saturation Flow Rate | 0.13 | 0.41 | 0.23 | 0.29 | | 0.26 | 0.27 |
| s, saturation flow rate [veh/h] | 1723 | 3445 | 4929 | 1538 | | 1663 | 1524 |
| c, Capacity [veh/h] | 253 | 2159 | 2143 | 669 | | 481 | 441 |
| d1, Uniform Delay [s] | 50.35 | 14.11 | 24.99 | 27.03 | | 40.90 | 41.57 |
| k, delay calibration | 0.31 | 0.50 | 0.50 | 0.50 | | 0.33 | 0.35 |
| I, Upstream Filtering Factor | 1.00 | 1.00 | 1.00 | 1.00 | | 1.00 | 1.00 |
| d2, Incremental Delay [s] | 26.18 | 1.53 | 0.97 | 5.28 | | 15.73 | 23.51 |
| d3, Initial Queue Delay [s] | 0.00 | 0.00 | 0.00 | 0.00 | | 0.00 | 0.00 |
| Rp, platoon ratio | 1.00 | 1.00 | 1.00 | 1.00 | | 1.00 | 1.00 |
| PF, progression factor | 1.00 | 1.00 | 1.00 | 1.00 | | 1.00 | 1.00 |

**Lane Group Results**

| | | | | | | | |
|---|---|---|---|---|---|---|---|
| X, volume / capacity | 0.91 | 0.65 | 0.54 | 0.67 | | 0.90 | 0.94 |
| d, Delay for Lane Group [s/veh] | 76.53 | 15.64 | 25.96 | 32.31 | | 56.63 | 65.08 |
| Lane Group LOS | E | B | C | C | | E | E |
| Critical Lane Group | Yes | No | No | Yes | | No | Yes |
| 50th-Percentile Queue Length [veh] | 8.47 | 11.24 | 7.94 | 10.78 | | 14.20 | 14.66 |
| 50th-Percentile Queue Length [ft] | 211.70 | 281.03 | 198.55 | 269.46 | | 355.09 | 366.50 |
| 95th-Percentile Queue Length [veh] | 13.24 | 16.74 | 12.56 | 16.16 | | 20.38 | 20.94 |
| 95th-Percentile Queue Length [ft] | 331.01 | 418.50 | 314.10 | 404.06 | | 509.61 | 523.48 |

**Movement, Approach, & Intersection Results**

| | | | | | | | | | | | | |
|---|---|---|---|---|---|---|---|---|---|---|---|---|
| d_M, Delay for Movement [s/veh] | 76.53 | 15.64 | 0.00 | 0.00 | 25.96 | 32.31 | 0.00 | 0.00 | 0.00 | 56.63 | 56.63 | 63.58 |
| Movement LOS | E | B | | | C | C | | | | E | E | E |
| d_A, Approach Delay [s/veh] | 24.18 | | | 27.74 | | | 0.00 | | | 60.76 | | |
| Approach LOS | C | | | C | | | A | | | E | | |
| d_I, Intersection Delay [s/veh] | 33.16 | | | | | | | | | | | |
| Intersection LOS | C | | | | | | | | | | | |
| Intersection V/C | 0.772 | | | | | | | | | | | |

## Sequence

| | | | | | | | | | | | | | | | | |
|---|---|---|---|---|---|---|---|---|---|---|---|---|---|---|---|---|
| Ring 1 | - | 2 | 4 | - | - | - | - | - | - | - | - | - | - | - | - | - |
| Ring 2 | 5 | 6 | - | - | - | - | - | - | - | - | - | - | - | - | - | - |
| Ring 3 | - | - | - | - | - | - | - | - | - | - | - | - | - | - | - | - |
| Ring 4 | - | - | - | - | - | - | - | - | - | - | - | - | - | - | - | - |

**Intersection Level Of Service Report**
**Intersection 15: Cedar Ave (NS) / I-10 Eastbound Ramps (EW)**

| | | | |
|---|---|---|---|
| Control Type: | Signalized | Delay (sec / veh): | 40.0 |
| Analysis Method: | HCM 2010 | Level Of Service: | D |
| Analysis Period: | 15 minutes | Volume to Capacity (v/c): | 0.809 |

**Intersection Setup**

| Name | Cedar Avenue | | | Cedar Avenue | | | | | | I-10 Eastbound Ramps | | |
|---|---|---|---|---|---|---|---|---|---|---|---|---|
| Approach | Northbound | | | Southbound | | | Eastbound | | | Westbound | | |
| Lane Configuration | | | | | | | | | | | | |
| Turning Movement | Left | Thru | Right | Left | Thru | Right | Left | Thru | Right | Left | Thru | Right |
| Lane Width [ft] | 12.00 | 12.00 | 12.00 | 12.00 | 12.00 | 12.00 | 12.00 | 12.00 | 12.00 | 12.00 | 12.00 | 12.00 |
| No. of Lanes in Pocket | 0 | 0 | 1 | 1 | 0 | 0 | 1 | 0 | 0 | 0 | 0 | 0 |
| Pocket Length [ft] | 100.00 | 100.00 | 555.00 | 305.00 | 100.00 | 100.00 | 340.00 | 100.00 | 100.00 | 100.00 | 100.00 | 100.00 |
| Speed [mph] | 40.00 | | | 40.00 | | | 30.00 | | | 30.00 | | |
| Grade [%] | 0.00 | | | 0.00 | | | 0.00 | | | 0.00 | | |
| Crosswalk | No | | | No | | | Yes | | | Yes | | |

**volumes**

| Name | Cedar Avenue | | | Cedar Avenue | | | | | | I-10 Eastbound Ramps | | |
|---|---|---|---|---|---|---|---|---|---|---|---|---|
| Base Volume Input [veh/h] | 0 | 843 | 288 | 374 | 1034 | 0 | 688 | 2 | 183 | 0 | 0 | 0 |
| Base Volume Adjustment Factor | 1.0000 | 1.0000 | 1.0000 | 1.0000 | 1.0000 | 1.0000 | 1.0000 | 1.0000 | 1.0000 | 1.0000 | 1.0000 | 1.0000 |
| Heavy Vehicles Percentage [%] | 2.00 | 5.00 | 5.00 | 5.00 | 5.00 | 2.00 | 6.00 | 6.00 | 6.00 | 2.00 | 2.00 | 2.00 |
| Growth Rate | 1.00 | 1.00 | 1.00 | 1.00 | 1.00 | 1.00 | 1.00 | 1.00 | 1.00 | 1.00 | 1.00 | 1.00 |
| In-Process Volume [veh/h] | 0 | 0 | 0 | 0 | 0 | 0 | 0 | 0 | 0 | 0 | 0 | 0 |
| Site-Generated Trips [veh/h] | 0 | 0 | 0 | 0 | 0 | 0 | 0 | 0 | 0 | 0 | 0 | 0 |
| Diverted Trips [veh/h] | 0 | 0 | 0 | 0 | 0 | 0 | 0 | 0 | 0 | 0 | 0 | 0 |
| Pass-by Trips [veh/h] | 0 | 0 | 0 | 0 | 0 | 0 | 0 | 0 | 0 | 0 | 0 | 0 |
| Existing Site Adjustment Volume [veh/h] | 0 | 0 | 0 | 0 | 0 | 0 | 0 | 0 | 0 | 0 | 0 | 0 |
| Other Volume [veh/h] | 0 | 0 | 0 | 0 | 0 | 0 | 0 | 0 | 0 | 0 | 0 | 0 |
| Right-Turn on Red Volume [veh/h] | 0 | 0 | 0 | 0 | 0 | 0 | 0 | 0 | 0 | 0 | 0 | 0 |
| Total Hourly Volume [veh/h] | 0 | 843 | 288 | 374 | 1034 | 0 | 688 | 2 | 183 | 0 | 0 | 0 |
| Peak Hour Factor | 1.0000 | 0.9240 | 0.9240 | 0.9240 | 0.9240 | 1.0000 | 0.9240 | 0.9240 | 0.9240 | 1.0000 | 1.0000 | 1.0000 |
| Other Adjustment Factor | 1.0000 | 1.0000 | 1.0000 | 1.0000 | 1.0000 | 1.0000 | 1.0000 | 1.0000 | 1.0000 | 1.0000 | 1.0000 | 1.0000 |
| Total 15-Minute Volume [veh/h] | 0 | 228 | 78 | 101 | 280 | 0 | 186 | 1 | 50 | 0 | 0 | 0 |
| Total Analysis Volume [veh/h] | 0 | 912 | 312 | 405 | 1119 | 0 | 745 | 2 | 198 | 0 | 0 | 0 |
| Presence of On-Street Parking | No | | No | No | | No | No | | No | | | |
| On-Street Parking Maneuver Rate [/h] | 0 | 0 | 0 | 0 | 0 | 0 | 0 | 0 | 0 | 0 | 0 | 0 |
| Local Bus Stopping Rate [/h] | 0 | 0 | 0 | 0 | 0 | 0 | 0 | 0 | 0 | 0 | 0 | 0 |
| Pedestrian Volume [ped/h] | 0 | | | 0 | | | 0 | | | 0 | | |
| Bicycle Volume [bicycles/h] | 0 | | | 0 | | | 0 | | | 0 | | |

**Intersection Settings**

| | |
|---|---|
| Located in CBD | No |
| Signal Coordination Group | 2 - NS - Cedar |
| Cycle Length [s] | 120 |
| Coordination Type | Time of Day Pattern Coordinated |
| Actuation Type | Fully actuated |
| Offset [s] | 78.0 |
| Offset Reference | LagFO |
| Permissive Mode | SingleBand |
| Lost time [s] | 12.00 |

**Phasing & Timing**

| Control Type | Permiss | Permiss | Permiss | Protecte | Permiss | Permiss | Permiss | Permiss | Permiss | Permiss | Permiss | Permiss |
|---|---|---|---|---|---|---|---|---|---|---|---|---|
| Signal group | 0 | 2 | 0 | 1 | 6 | 0 | 0 | 8 | 0 | 0 | 0 | 0 |
| Auxiliary Signal Groups | | | | | | | | | | | | |
| Lead / Lag | - | - | - | Lead | - | - | - | - | - | - | - | - |
| Minimum Green [s] | 0 | 5 | 0 | 5 | 5 | 0 | 0 | 5 | 0 | 0 | 0 | 0 |
| Maximum Green [s] | 0 | 30 | 0 | 30 | 30 | 0 | 0 | 30 | 0 | 0 | 0 | 0 |
| Amber [s] | 0.0 | 4.4 | 0.0 | 4.4 | 4.4 | 0.0 | 0.0 | 3.7 | 0.0 | 0.0 | 0.0 | 0.0 |
| All red [s] | 0.0 | 1.0 | 0.0 | 1.0 | 1.0 | 0.0 | 0.0 | 1.0 | 0.0 | 0.0 | 0.0 | 0.0 |
| Split [s] | 0 | 40 | 0 | 37 | 77 | 0 | 0 | 43 | 0 | 0 | 0 | 0 |
| Vehicle Extension [s] | 0.0 | 3.0 | 0.0 | 3.0 | 3.0 | 0.0 | 0.0 | 3.0 | 0.0 | 0.0 | 0.0 | 0.0 |
| Walk [s] | 0 | 7 | 0 | 0 | 7 | 0 | 0 | 7 | 0 | 0 | 0 | 0 |
| Pedestrian Clearance [s] | 0 | 21 | 0 | 0 | 16 | 0 | 0 | 10 | 0 | 0 | 0 | 0 |
| I1, Start-Up Lost Time [s] | 0.0 | 2.0 | 0.0 | 2.0 | 2.0 | 0.0 | 0.0 | 2.0 | 0.0 | 0.0 | 0.0 | 0.0 |
| I2, Clearance Lost Time [s] | 0.0 | 3.4 | 0.0 | 3.4 | 3.4 | 0.0 | 0.0 | 2.7 | 0.0 | 0.0 | 0.0 | 0.0 |
| Minimum Recall | | No | | No | No | | | No | | | | |
| Maximum Recall | | No | | No | No | | | No | | | | |
| Pedestrian Recall | | No | | No | No | | | No | | | | |
| Detector Location [ft] | 0.0 | 0.0 | 0.0 | 0.0 | 0.0 | 0.0 | 0.0 | 0.0 | 0.0 | 0.0 | 0.0 | 0.0 |
| Detector Length [ft] | 0.0 | 0.0 | 0.0 | 0.0 | 0.0 | 0.0 | 0.0 | 0.0 | 0.0 | 0.0 | 0.0 | 0.0 |
| I, Upstream Filtering Factor | 1.00 | 1.00 | 1.00 | 1.00 | 1.00 | 1.00 | 1.00 | 1.00 | 1.00 | 1.00 | 1.00 | 1.00 |

**Exclusive Pedestrian Phase**

| | |
|---|---|
| Pedestrian Signal Group | 0 |
| Pedestrian Walk [s] | 0 |
| Pedestrian Clearance [s] | 0 |

**Lane Group Calculations**

| Lane Group | C | R | L | C | L | C | |
|---|---|---|---|---|---|---|---|
| L, Total Lost Time per Cycle [s] | 5.40 | 5.40 | 5.40 | 5.40 | 4.70 | 4.70 | |
| l1_p, Permitted Start-Up Lost Time [s] | 0.00 | 0.00 | 0.00 | 0.00 | 0.00 | 0.00 | |
| l2, Clearance Lost Time [s] | 3.40 | 3.40 | 3.40 | 3.40 | 2.70 | 2.70 | |
| g_i, Effective Green Time [s] | 38 | 38 | 30 | 73 | 37 | 37 | |
| g / C, Green / Cycle | 0.32 | 0.32 | 0.25 | 0.61 | 0.31 | 0.31 | |
| (v / s)_i Volume / Saturation Flow Rate | 0.19 | 0.20 | 0.24 | 0.32 | 0.28 | 0.29 | |
| s, saturation flow rate [veh/h] | 4929 | 1538 | 1723 | 3445 | 1707 | 1625 | |
| c, Capacity [veh/h] | 1556 | 485 | 429 | 2100 | 523 | 498 | |
| d1, Uniform Delay [s] | 34.46 | 35.24 | 44.22 | 13.54 | 39.96 | 40.66 | |
| k, delay calibration | 0.50 | 0.50 | 0.35 | 0.50 | 0.35 | 0.38 | |
| I, Upstream Filtering Factor | 1.00 | 1.00 | 1.00 | 1.00 | 1.00 | 1.00 | |
| d2, Incremental Delay [s] | 1.62 | 6.41 | 24.76 | 0.97 | 16.85 | 24.33 | |
| d3, Initial Queue Delay [s] | 0.00 | 0.00 | 0.00 | 0.00 | 0.00 | 0.00 | |
| Rp, platoon ratio | 1.00 | 1.00 | 1.00 | 1.00 | 1.00 | 1.00 | |
| PF, progression factor | 1.00 | 1.00 | 1.00 | 1.00 | 1.00 | 1.00 | |

**Lane Group Results**

| | | | | | | | |
|---|---|---|---|---|---|---|---|
| X, volume / capacity | 0.59 | 0.64 | 0.94 | 0.53 | 0.91 | 0.95 | |
| d, Delay for Lane Group [s/veh] | 36.09 | 41.65 | 68.98 | 14.51 | 56.81 | 64.99 | |
| Lane Group LOS | D | D | E | B | E | E | |
| Critical Lane Group | No | Yes | Yes | No | No | Yes | |
| 50th-Percentile Queue Length [veh] | 7.50 | 8.49 | 14.43 | 8.30 | 15.72 | 16.79 | |
| 50th-Percentile Queue Length [ft] | 187.49 | 212.21 | 360.80 | 207.54 | 392.96 | 419.66 | |
| 95th-Percentile Queue Length [veh] | 11.99 | 13.27 | 20.66 | 13.03 | 22.22 | 23.51 | |
| 95th-Percentile Queue Length [ft] | 299.77 | 331.66 | 516.56 | 325.67 | 555.51 | 587.64 | |

**Movement, Approach, & Intersection Results**

| | | | | | | | | | | | | |
|---|---|---|---|---|---|---|---|---|---|---|---|---|
| d_M, Delay for Movement [s/veh] | 0.00 | 36.09 | 41.65 | 68.98 | 14.51 | 0.00 | 59.79 | 64.99 | 64.99 | 0.00 | 0.00 | 0.00 |
| Movement LOS | | D | D | E | B | | E | E | E | | | |
| d_A, Approach Delay [s/veh] | 37.51 | | | 28.98 | | | 60.89 | | | 0.00 | | |
| Approach LOS | D | | | C | | | E | | | A | | |
| d_I, Intersection Delay [s/veh] | 39.97 | | | | | | | | | | | |
| Intersection LOS | D | | | | | | | | | | | |
| Intersection V/C | 0.809 | | | | | | | | | | | |

## Sequence

| | | | | | | | | | | | | | | | | |
|---|---|---|---|---|---|---|---|---|---|---|---|---|---|---|---|---|
| Ring 1 | 1 | 2 | - | - | - | - | - | - | - | - | - | - | - | - | - | - |
| Ring 2 | - | 6 | 8 | - | - | - | - | - | - | - | - | - | - | - | - | - |
| Ring 3 | - | - | - | - | - | - | - | - | - | - | - | - | - | - | - | - |
| Ring 4 | - | - | - | - | - | - | - | - | - | - | - | - | - | - | - | - |

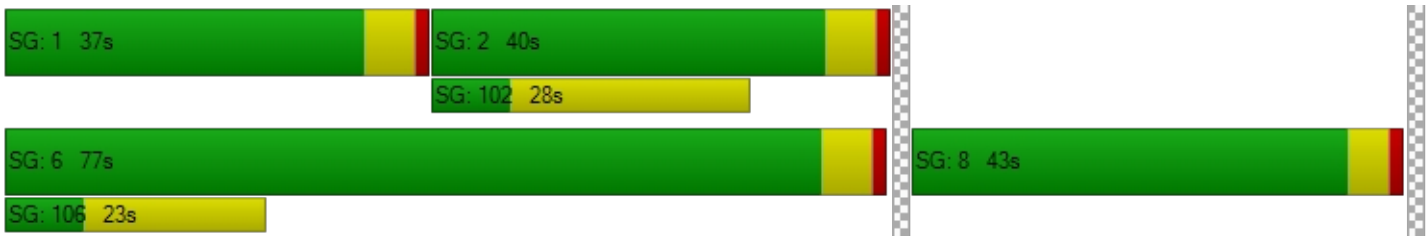

**Intersection Level Of Service Report**
**Intersection 16: Cedar Ave (NS) / Slover Ave (EW)**

| | | | |
|---|---|---|---|
| Control Type: | Signalized | Delay (sec / veh): | 25.5 |
| Analysis Method: | HCM 2010 | Level Of Service: | C |
| Analysis Period: | 15 minutes | Volume to Capacity (v/c): | 0.497 |

**Intersection Setup**

| Name | Cedar Avenue | | | Cedar Avenue | | | Slover Avenue | | | Slover Avenue | | |
|---|---|---|---|---|---|---|---|---|---|---|---|---|
| Approach | Northbound | | | Southbound | | | Eastbound | | | Westbound | | |
| Lane Configuration | | | | | | | | | | | | |
| Turning Movement | Left | Thru | Right | Left | Thru | Right | Left | Thru | Right | Left | Thru | Right |
| Lane Width [ft] | 12.00 | 12.00 | 12.00 | 12.00 | 12.00 | 12.00 | 12.00 | 12.00 | 12.00 | 12.00 | 12.00 | 12.00 |
| No. of Lanes in Pocket | 1 | 0 | 0 | 1 | 0 | 0 | 1 | 0 | 0 | 1 | 0 | 0 |
| Pocket Length [ft] | 200.00 | 100.00 | 100.00 | 85.00 | 100.00 | 100.00 | 185.00 | 100.00 | 100.00 | 150.00 | 100.00 | 100.00 |
| Speed [mph] | 45.00 | | | 45.00 | | | 50.00 | | | 50.00 | | |
| Grade [%] | 0.00 | | | 0.00 | | | 0.00 | | | 0.00 | | |
| Crosswalk | Yes | | | Yes | | | Yes | | | Yes | | |

**volumes**

| Name | Cedar Avenue | | | Cedar Avenue | | | Slover Avenue | | | Slover Avenue | | |
|---|---|---|---|---|---|---|---|---|---|---|---|---|
| Base Volume Input [veh/h] | 67 | 676 | 18 | 53 | 727 | 74 | 185 | 158 | 66 | 26 | 84 | 65 |
| Base Volume Adjustment Factor | 1.0000 | 1.0000 | 1.0000 | 1.0000 | 1.0000 | 1.0000 | 1.0000 | 1.0000 | 1.0000 | 1.0000 | 1.0000 | 1.0000 |
| Heavy Vehicles Percentage [%] | 5.00 | 5.00 | 5.00 | 5.00 | 5.00 | 5.00 | 2.00 | 2.00 | 2.00 | 2.00 | 2.00 | 2.00 |
| Growth Rate | 1.00 | 1.00 | 1.00 | 1.00 | 1.00 | 1.00 | 1.00 | 1.00 | 1.00 | 1.00 | 1.00 | 1.00 |
| In-Process Volume [veh/h] | 0 | 0 | 0 | 0 | 0 | 0 | 0 | 0 | 0 | 0 | 0 | 0 |
| Site-Generated Trips [veh/h] | 0 | 0 | 0 | 0 | 0 | 0 | 0 | 0 | 0 | 0 | 0 | 0 |
| Diverted Trips [veh/h] | 0 | 0 | 0 | 0 | 0 | 0 | 0 | 0 | 0 | 0 | 0 | 0 |
| Pass-by Trips [veh/h] | 0 | 0 | 0 | 0 | 0 | 0 | 0 | 0 | 0 | 0 | 0 | 0 |
| Existing Site Adjustment Volume [veh/h] | 0 | 0 | 0 | 0 | 0 | 0 | 0 | 0 | 0 | 0 | 0 | 0 |
| Other Volume [veh/h] | 0 | 0 | 0 | 0 | 0 | 0 | 0 | 0 | 0 | 0 | 0 | 0 |
| Right-Turn on Red Volume [veh/h] | 0 | 0 | 0 | 0 | 0 | 0 | 0 | 0 | 0 | 0 | 0 | 0 |
| Total Hourly Volume [veh/h] | 67 | 676 | 18 | 53 | 727 | 74 | 185 | 158 | 66 | 26 | 84 | 65 |
| Peak Hour Factor | 0.8589 | 0.8890 | 0.8890 | 0.8890 | 0.8890 | 0.8890 | 0.8890 | 0.8890 | 0.8890 | 0.8890 | 0.8890 | 0.8890 |
| Other Adjustment Factor | 1.0000 | 1.0000 | 1.0000 | 1.0000 | 1.0000 | 1.0000 | 1.0000 | 1.0000 | 1.0000 | 1.0000 | 1.0000 | 1.0000 |
| Total 15-Minute Volume [veh/h] | 20 | 190 | 5 | 15 | 204 | 21 | 52 | 44 | 19 | 7 | 24 | 18 |
| Total Analysis Volume [veh/h] | 78 | 760 | 20 | 60 | 818 | 83 | 208 | 178 | 74 | 29 | 94 | 73 |
| Presence of On-Street Parking | No | | No | No | | No | No | | No | No | | No |
| On-Street Parking Maneuver Rate [/h] | 0 | 0 | 0 | 0 | 0 | 0 | 0 | 0 | 0 | 0 | 0 | 0 |
| Local Bus Stopping Rate [/h] | 0 | 0 | 0 | 0 | 0 | 0 | 0 | 0 | 0 | 0 | 0 | 0 |
| Pedestrian Volume [ped/h] | 0 | | | 0 | | | 0 | | | 0 | | |
| Bicycle Volume [bicycles/h] | 0 | | | 0 | | | 0 | | | 0 | | |

**Intersection Settings**

| | |
|---|---|
| Located in CBD | No |
| Signal Coordination Group | 2 - NS - Cedar |
| Cycle Length [s] | 120 |
| Coordination Type | Time of Day Pattern Coordinated |
| Actuation Type | Fully actuated |
| Offset [s] | 49.0 |
| Offset Reference | LagFO |
| Permissive Mode | SingleBand |
| Lost time [s] | 16.00 |

**Phasing & Timing**

| Control Type | Protecte | Permiss | Permiss | Protecte | Permiss | Permiss | Protecte | Permiss | Permiss | Protecte | Permiss | Overlap |
|---|---|---|---|---|---|---|---|---|---|---|---|---|
| Signal group | 5 | 2 | 0 | 1 | 6 | 0 | 3 | 8 | 0 | 7 | 4 | 4 |
| Auxiliary Signal Groups | | | | | | | | | | | | 1,4 |
| Lead / Lag | Lead | - | - | Lead | - | - | Lead | - | - | Lead | - | - |
| Minimum Green [s] | 5 | 5 | 0 | 5 | 5 | 0 | 5 | 5 | 0 | 5 | 5 | 5 |
| Maximum Green [s] | 30 | 30 | 0 | 30 | 30 | 0 | 30 | 30 | 0 | 30 | 30 | 30 |
| Amber [s] | 4.8 | 4.8 | 0.0 | 4.8 | 4.8 | 0.0 | 5.2 | 5.2 | 0.0 | 5.2 | 5.2 | 5.2 |
| All red [s] | 1.0 | 1.0 | 0.0 | 1.0 | 1.0 | 0.0 | 1.0 | 1.0 | 0.0 | 1.0 | 1.0 | 1.0 |
| Split [s] | 11 | 44 | 0 | 11 | 44 | 0 | 20 | 53 | 0 | 12 | 45 | 45 |
| Vehicle Extension [s] | 3.0 | 3.0 | 0.0 | 3.0 | 3.0 | 0.0 | 3.0 | 3.0 | 0.0 | 3.0 | 3.0 | 3.0 |
| Walk [s] | 0 | 7 | 0 | 0 | 7 | 0 | 0 | 7 | 0 | 0 | 7 | 7 |
| Pedestrian Clearance [s] | 0 | 31 | 0 | 0 | 20 | 0 | 0 | 26 | 0 | 0 | 31 | 31 |
| I1, Start-Up Lost Time [s] | 2.0 | 2.0 | 0.0 | 2.0 | 2.0 | 0.0 | 2.0 | 2.0 | 0.0 | 2.0 | 2.0 | 2.0 |
| I2, Clearance Lost Time [s] | 3.8 | 3.8 | 0.0 | 3.8 | 3.8 | 0.0 | 4.2 | 4.2 | 0.0 | 4.2 | 4.2 | 4.2 |
| Minimum Recall | No | No | | No | No | | No | No | | No | No | No |
| Maximum Recall | No | No | | No | No | | No | No | | No | No | No |
| Pedestrian Recall | No | No | | No | No | | No | No | | No | No | No |
| Detector Location [ft] | 0.0 | 0.0 | 0.0 | 0.0 | 0.0 | 0.0 | 0.0 | 0.0 | 0.0 | 0.0 | 0.0 | 0.0 |
| Detector Length [ft] | 0.0 | 0.0 | 0.0 | 0.0 | 0.0 | 0.0 | 0.0 | 0.0 | 0.0 | 0.0 | 0.0 | 0.0 |
| I, Upstream Filtering Factor | 1.00 | 1.00 | 1.00 | 1.00 | 1.00 | 1.00 | 1.00 | 1.00 | 1.00 | 1.00 | 1.00 | 1.00 |

**Exclusive Pedestrian Phase**

| | |
|---|---|
| Pedestrian Signal Group | 0 |
| Pedestrian Walk [s] | 0 |
| Pedestrian Clearance [s] | 0 |

**Lane Group Calculations**

| Lane Group | L | C | C | L | C | C | L | C | L | C | R |
|---|---|---|---|---|---|---|---|---|---|---|---|
| L, Total Lost Time per Cycle [s] | 5.80 | 5.80 | 5.80 | 5.80 | 5.80 | 5.80 | 6.20 | 6.20 | 6.20 | 6.20 | 5.80 |
| l1_p, Permitted Start-Up Lost Time [s] | 0.00 | 0.00 | 0.00 | 0.00 | 0.00 | 0.00 | 0.00 | 0.00 | 0.00 | 0.00 | 0.00 |
| l2, Clearance Lost Time [s] | 0.00 | 3.80 | 3.80 | 0.00 | 3.80 | 3.80 | 4.20 | 4.20 | 4.20 | 4.20 | 0.00 |
| g_i, Effective Green Time [s] | 79 | 68 | 68 | 79 | 69 | 69 | 14 | 19 | 3 | 9 | 20 |
| g / C, Green / Cycle | 0.66 | 0.57 | 0.57 | 0.66 | 0.57 | 0.57 | 0.12 | 0.16 | 0.03 | 0.07 | 0.17 |
| (v / s)_i Volume / Saturation Flow Rate | 0.11 | 0.22 | 0.22 | 0.08 | 0.25 | 0.25 | 0.12 | 0.14 | 0.02 | 0.05 | 0.05 |
| s, saturation flow rate [veh/h] | 719 | 1810 | 1793 | 791 | 1810 | 1752 | 1774 | 1771 | 1774 | 1863 | 1583 |
| c, Capacity [veh/h] | 503 | 1028 | 1019 | 554 | 1037 | 1004 | 205 | 285 | 47 | 135 | 266 |
| d1, Uniform Delay [s] | 3.49 | 7.36 | 7.36 | 3.11 | 7.33 | 7.33 | 53.12 | 49.27 | 57.82 | 54.41 | 43.56 |
| k, delay calibration | 0.50 | 0.50 | 0.50 | 0.50 | 0.50 | 0.50 | 0.33 | 0.11 | 0.11 | 0.11 | 0.20 |
| I, Upstream Filtering Factor | 1.00 | 1.00 | 1.00 | 1.00 | 1.00 | 1.00 | 1.00 | 1.00 | 1.00 | 1.00 | 1.00 |
| d2, Incremental Delay [s] | 0.66 | 1.07 | 1.08 | 0.39 | 1.37 | 1.41 | 55.08 | 8.84 | 12.04 | 6.34 | 1.01 |
| d3, Initial Queue Delay [s] | 0.00 | 0.00 | 0.00 | 0.00 | 0.00 | 0.00 | 0.00 | 0.00 | 0.00 | 0.00 | 0.00 |
| Rp, platoon ratio | 1.33 | 1.33 | 1.33 | 1.33 | 1.33 | 1.33 | 1.00 | 1.00 | 1.00 | 1.00 | 1.00 |
| PF, progression factor | 1.00 | 1.00 | 1.00 | 1.00 | 1.00 | 1.00 | 1.00 | 1.00 | 1.00 | 1.00 | 1.00 |

**Lane Group Results**

| | | | | | | | | | | | |
|---|---|---|---|---|---|---|---|---|---|---|---|
| X, volume / capacity | 0.16 | 0.38 | 0.38 | 0.11 | 0.44 | 0.44 | 1.02 | 0.88 | 0.61 | 0.70 | 0.27 |
| d, Delay for Lane Group [s/veh] | 4.14 | 8.43 | 8.44 | 3.50 | 8.70 | 8.74 | 108.20 | 58.12 | 69.86 | 60.76 | 44.57 |
| Lane Group LOS | A | A | A | A | A | A | F | E | E | E | D |
| Critical Lane Group | Yes | No | No | No | No | Yes | Yes | No | No | Yes | No |
| 50th-Percentile Queue Length [veh] | 0.31 | 3.00 | 2.98 | 0.22 | 3.51 | 3.41 | 9.09 | 7.81 | 1.00 | 2.93 | 1.91 |
| 50th-Percentile Queue Length [ft] | 7.64 | 74.99 | 74.40 | 5.61 | 87.80 | 85.31 | 227.15 | 195.20 | 25.10 | 73.15 | 47.74 |
| 95th-Percentile Queue Length [veh] | 0.55 | 5.40 | 5.36 | 0.40 | 6.32 | 6.14 | 14.12 | 12.39 | 1.81 | 5.27 | 3.44 |
| 95th-Percentile Queue Length [ft] | 13.76 | 134.99 | 133.91 | 10.11 | 158.05 | 153.55 | 353.06 | 309.77 | 45.19 | 131.67 | 85.93 |

**Movement, Approach, & Intersection Results**

| | | | | | | | | | | | | |
|---|---|---|---|---|---|---|---|---|---|---|---|---|
| d_M, Delay for Movement [s/veh] | 4.14 | 8.43 | 8.44 | 3.50 | 8.72 | 8.74 | 108.20 | 58.12 | 58.12 | 69.86 | 60.76 | 44.57 |
| Movement LOS | A | A | A | A | A | A | F | E | E | E | E | D |
| d_A, Approach Delay [s/veh] | 8.04 | | | 8.39 | | | 80.76 | | | 56.08 | | |
| Approach LOS | A | | | A | | | F | | | E | | |
| d_I, Intersection Delay [s/veh] | 25.50 | | | | | | | | | | | |
| Intersection LOS | C | | | | | | | | | | | |
| Intersection V/C | 0.497 | | | | | | | | | | | |

## Sequence

| | | | | | | | | | | | | | | | | |
|---|---|---|---|---|---|---|---|---|---|---|---|---|---|---|---|---|
| Ring 1 | 1 | 2 | 3 | 4 | - | - | - | - | - | - | - | - | - | - | - | - |
| Ring 2 | 5 | 6 | 7 | 8 | - | - | - | - | - | - | - | - | - | - | - | - |
| Ring 3 | - | - | - | - | - | - | - | - | - | - | - | - | - | - | - | - |
| Ring 4 | - | - | - | - | - | - | - | - | - | - | - | - | - | - | - | - |

# Existing plus Project
# Level of Service Calculations

**Intersection Level Of Service Report**
**Intersection 1: Sierra Ave (NS) / San Bernardino Ave (EW)**

| | | | |
|---|---|---|---|
| Control Type: | Signalized | Delay (sec / veh): | 29.0 |
| Analysis Method: | HCM 2010 | Level Of Service: | C |
| Analysis Period: | 15 minutes | Volume to Capacity (v/c): | 0.622 |

**Intersection Setup**

| Name | Sierra Avenue | | | Sierra Avenue | | | San Bernardino Avenue | | | San Bernardino Avenue | | |
|---|---|---|---|---|---|---|---|---|---|---|---|---|
| Approach | Northbound | | | Southbound | | | Eastbound | | | Westbound | | |
| Lane Configuration | | | | | | | | | | | | |
| Turning Movement | Left | Thru | Right | Left | Thru | Right | Left | Thru | Right | Left | Thru | Right |
| Lane Width [ft] | 12.00 | 12.00 | 12.00 | 12.00 | 12.00 | 12.00 | 12.00 | 12.00 | 12.00 | 12.00 | 12.00 | 12.00 |
| No. of Lanes in Pocket | 1 | 0 | 1 | 1 | 0 | 0 | 1 | 0 | 0 | 1 | 0 | 0 |
| Pocket Length [ft] | 140.00 | 100.00 | 140.00 | 150.00 | 100.00 | 100.00 | 150.00 | 100.00 | 100.00 | 240.00 | 100.00 | 100.00 |
| Speed [mph] | 35.00 | | | 35.00 | | | 35.00 | | | 30.00 | | |
| Grade [%] | 0.00 | | | 0.00 | | | 0.00 | | | 0.00 | | |
| Crosswalk | Yes | | | Yes | | | Yes | | | Yes | | |

**volumes**

| Name | Sierra Avenue | | | Sierra Avenue | | | San Bernardino Avenue | | | San Bernardino Avenue | | |
|---|---|---|---|---|---|---|---|---|---|---|---|---|
| Base Volume Input [veh/h] | 51 | 621 | 106 | 34 | 893 | 35 | 47 | 193 | 74 | 223 | 186 | 27 |
| Base Volume Adjustment Factor | 1.0000 | 1.0000 | 1.0000 | 1.0000 | 1.0000 | 1.0000 | 1.0000 | 1.0000 | 1.0000 | 1.0000 | 1.0000 | 1.0000 |
| Heavy Vehicles Percentage [%] | 2.00 | 2.00 | 2.00 | 2.00 | 2.00 | 2.00 | 2.00 | 2.00 | 2.00 | 2.00 | 2.00 | 2.00 |
| Growth Rate | 1.00 | 1.00 | 1.00 | 1.00 | 1.00 | 1.00 | 1.00 | 1.00 | 1.00 | 1.00 | 1.00 | 1.00 |
| In-Process Volume [veh/h] | 0 | 0 | 0 | 0 | 0 | 0 | 0 | 0 | 0 | 0 | 0 | 0 |
| Site-Generated Trips [veh/h] | 5 | 5 | 0 | 0 | 11 | 0 | 0 | 0 | 11 | 0 | 0 | 0 |
| Diverted Trips [veh/h] | 0 | 0 | 0 | 0 | 0 | 0 | 0 | 0 | 0 | 0 | 0 | 0 |
| Pass-by Trips [veh/h] | 0 | 0 | 0 | 0 | 0 | 0 | 0 | 0 | 0 | 0 | 0 | 0 |
| Existing Site Adjustment Volume [veh/h] | 0 | 0 | 0 | 0 | 0 | 0 | 0 | 0 | 0 | 0 | 0 | 0 |
| Other Volume [veh/h] | 0 | 0 | 0 | 0 | 0 | 0 | 0 | 0 | 0 | 0 | 0 | 0 |
| Right-Turn on Red Volume [veh/h] | 0 | 0 | 0 | 0 | 0 | 0 | 0 | 0 | 0 | 0 | 0 | 0 |
| Total Hourly Volume [veh/h] | 56 | 626 | 106 | 34 | 904 | 35 | 47 | 193 | 85 | 223 | 186 | 27 |
| Peak Hour Factor | 0.9020 | 0.9020 | 0.9020 | 0.9020 | 0.9200 | 0.9020 | 0.9020 | 0.9020 | 0.9020 | 0.9020 | 0.9020 | 0.9020 |
| Other Adjustment Factor | 1.0000 | 1.0000 | 1.0000 | 1.0000 | 1.0000 | 1.0000 | 1.0000 | 1.0000 | 1.0000 | 1.0000 | 1.0000 | 1.0000 |
| Total 15-Minute Volume [veh/h] | 16 | 174 | 29 | 9 | 246 | 10 | 13 | 53 | 24 | 62 | 52 | 7 |
| Total Analysis Volume [veh/h] | 62 | 694 | 118 | 38 | 983 | 39 | 52 | 214 | 94 | 247 | 206 | 30 |
| Presence of On-Street Parking | No | | No | No | | No | No | | No | No | | No |
| On-Street Parking Maneuver Rate [/h] | 0 | 0 | 0 | 0 | 0 | 0 | 0 | 0 | 0 | 0 | 0 | 0 |
| Local Bus Stopping Rate [/h] | 0 | 0 | 0 | 0 | 0 | 0 | 0 | 0 | 0 | 0 | 0 | 0 |
| Pedestrian Volume [ped/h] | 0 | | | 0 | | | 0 | | | 0 | | |
| Bicycle Volume [bicycles/h] | 0 | | | 0 | | | 0 | | | 0 | | |

**Intersection Settings**

| | |
|---|---|
| Located in CBD | No |
| Signal Coordination Group | 1 - NS - Sierra |
| Cycle Length [s] | 120 |
| Coordination Type | Time of Day Pattern Coordinated |
| Actuation Type | Fully actuated |
| Offset [s] | 0.0 |
| Offset Reference | LagFO |
| Permissive Mode | SingleBand |
| Lost time [s] | 16.00 |

**Phasing & Timing**

| Control Type | Protecte | Permiss | Permiss | Protecte | Permiss | Permiss | Protecte | Permiss | Permiss | Protecte | Permiss | Permiss |
|---|---|---|---|---|---|---|---|---|---|---|---|---|
| Signal group | 5 | 2 | 0 | 1 | 6 | 0 | 3 | 8 | 0 | 7 | 4 | 0 |
| Auxiliary Signal Groups | | | | | | | | | | | | |
| Lead / Lag | Lead | - | - | Lead | - | - | Lead | - | - | Lead | - | - |
| Minimum Green [s] | 5 | 5 | 0 | 5 | 5 | 0 | 5 | 5 | 0 | 5 | 5 | 0 |
| Maximum Green [s] | 30 | 30 | 0 | 30 | 30 | 0 | 30 | 30 | 0 | 30 | 30 | 0 |
| Amber [s] | 4.1 | 4.1 | 0.0 | 4.1 | 4.1 | 0.0 | 4.1 | 4.1 | 0.0 | 3.7 | 3.7 | 0.0 |
| All red [s] | 1.0 | 1.0 | 0.0 | 1.0 | 1.0 | 0.0 | 1.0 | 1.0 | 0.0 | 1.0 | 1.0 | 0.0 |
| Split [s] | 11 | 46 | 0 | 11 | 46 | 0 | 13 | 41 | 0 | 22 | 50 | 0 |
| Vehicle Extension [s] | 3.0 | 3.0 | 0.0 | 3.0 | 3.0 | 0.0 | 3.0 | 3.0 | 0.0 | 3.0 | 3.0 | 0.0 |
| Walk [s] | 0 | 7 | 0 | 0 | 7 | 0 | 0 | 7 | 0 | 0 | 7 | 0 |
| Pedestrian Clearance [s] | 0 | 22 | 0 | 0 | 23 | 0 | 0 | 28 | 0 | 0 | 25 | 0 |
| I1, Start-Up Lost Time [s] | 2.0 | 2.0 | 0.0 | 2.0 | 2.0 | 0.0 | 2.0 | 2.0 | 0.0 | 2.0 | 2.0 | 0.0 |
| I2, Clearance Lost Time [s] | 3.1 | 3.1 | 0.0 | 3.1 | 3.1 | 0.0 | 3.1 | 3.1 | 0.0 | 2.7 | 2.7 | 0.0 |
| Minimum Recall | No | No | | No | No | | No | No | | No | No | |
| Maximum Recall | No | No | | No | No | | No | No | | No | No | |
| Pedestrian Recall | No | No | | No | No | | No | No | | No | No | |
| Detector Location [ft] | 0.0 | 0.0 | 0.0 | 0.0 | 0.0 | 0.0 | 0.0 | 0.0 | 0.0 | 0.0 | 0.0 | 0.0 |
| Detector Length [ft] | 0.0 | 0.0 | 0.0 | 0.0 | 0.0 | 0.0 | 0.0 | 0.0 | 0.0 | 0.0 | 0.0 | 0.0 |
| I, Upstream Filtering Factor | 1.00 | 1.00 | 1.00 | 1.00 | 1.00 | 1.00 | 1.00 | 1.00 | 1.00 | 1.00 | 1.00 | 1.00 |

**Exclusive Pedestrian Phase**

| | |
|---|---|
| Pedestrian Signal Group | 0 |
| Pedestrian Walk [s] | 0 |
| Pedestrian Clearance [s] | 0 |

**Lane Group Calculations**

| Lane Group | L | C | R | L | C | C | L | C | C | L | C | C |
|---|---|---|---|---|---|---|---|---|---|---|---|---|
| L, Total Lost Time per Cycle [s] | 5.10 | 5.10 | 5.10 | 5.10 | 5.10 | 5.10 | 5.10 | 5.10 | 5.10 | 4.70 | 4.70 | 4.70 |
| l1_p, Permitted Start-Up Lost Time [s] | 0.00 | 0.00 | 0.00 | 0.00 | 0.00 | 0.00 | 0.00 | 0.00 | 0.00 | 0.00 | 0.00 | 0.00 |
| l2, Clearance Lost Time [s] | 3.10 | 3.10 | 3.10 | 3.10 | 3.10 | 3.10 | 3.10 | 3.10 | 3.10 | 2.70 | 2.70 | 2.70 |
| g_i, Effective Green Time [s] | 5 | 66 | 66 | 4 | 64 | 64 | 5 | 13 | 13 | 17 | 26 | 26 |
| g / C, Green / Cycle | 0.05 | 0.55 | 0.55 | 0.03 | 0.53 | 0.53 | 0.04 | 0.11 | 0.11 | 0.14 | 0.22 | 0.22 |
| (v / s)_i Volume / Saturation Flow Rate | 0.03 | 0.20 | 0.07 | 0.02 | 0.28 | 0.28 | 0.03 | 0.09 | 0.09 | 0.14 | 0.06 | 0.07 |
| s, saturation flow rate [veh/h] | 1774 | 3547 | 1583 | 1774 | 1863 | 1838 | 1774 | 1863 | 1676 | 1774 | 1863 | 1781 |
| c, Capacity [veh/h] | 81 | 1945 | 868 | 55 | 994 | 981 | 68 | 204 | 184 | 256 | 402 | 384 |
| d1, Uniform Delay [s] | 55.79 | 8.43 | 7.65 | 57.01 | 10.24 | 10.25 | 57.17 | 52.03 | 52.23 | 51.05 | 39.48 | 39.51 |
| k, delay calibration | 0.11 | 0.50 | 0.50 | 0.11 | 0.50 | 0.50 | 0.11 | 0.11 | 0.11 | 0.37 | 0.11 | 0.11 |
| I, Upstream Filtering Factor | 1.00 | 1.00 | 1.00 | 1.00 | 1.00 | 1.00 | 1.00 | 1.00 | 1.00 | 1.00 | 1.00 | 1.00 |
| d2, Incremental Delay [s] | 14.19 | 0.51 | 0.33 | 14.62 | 1.92 | 1.95 | 15.73 | 6.28 | 8.25 | 40.07 | 0.41 | 0.44 |
| d3, Initial Queue Delay [s] | 0.00 | 0.00 | 0.00 | 0.00 | 0.00 | 0.00 | 0.00 | 0.00 | 0.00 | 0.00 | 0.00 | 0.00 |
| Rp, platoon ratio | 1.33 | 1.33 | 1.33 | 1.33 | 1.33 | 1.33 | 1.00 | 1.00 | 1.00 | 1.00 | 1.00 | 1.00 |
| PF, progression factor | 1.00 | 1.00 | 1.00 | 1.00 | 1.00 | 1.00 | 1.00 | 1.00 | 1.00 | 1.00 | 1.00 | 1.00 |

**Lane Group Results**

| | | | | | | | | | | | | |
|---|---|---|---|---|---|---|---|---|---|---|---|---|
| X, volume / capacity | 0.77 | 0.36 | 0.14 | 0.69 | 0.52 | 0.52 | 0.76 | 0.78 | 0.81 | 0.96 | 0.30 | 0.30 |
| d, Delay for Lane Group [s/veh] | 69.98 | 8.95 | 7.97 | 71.64 | 12.17 | 12.19 | 72.90 | 58.31 | 60.48 | 91.12 | 39.89 | 39.95 |
| Lane Group LOS | E | A | A | E | B | B | E | E | E | F | D | D |
| Critical Lane Group | Yes | No | No | No | No | Yes | No | No | Yes | Yes | No | No |
| 50th-Percentile Queue Length [veh] | 2.13 | 2.92 | 0.95 | 1.34 | 5.28 | 5.22 | 1.85 | 4.98 | 4.77 | 10.21 | 3.03 | 2.93 |
| 50th-Percentile Queue Length [ft] | 53.33 | 72.94 | 23.81 | 33.62 | 131.99 | 130.42 | 46.26 | 124.45 | 119.21 | 255.32 | 75.75 | 73.37 |
| 95th-Percentile Queue Length [veh] | 3.84 | 5.25 | 1.71 | 2.42 | 9.05 | 8.96 | 3.33 | 8.64 | 8.35 | 15.45 | 5.45 | 5.28 |
| 95th-Percentile Queue Length [ft] | 96.00 | 131.30 | 42.86 | 60.51 | 226.20 | 224.06 | 83.26 | 215.93 | 208.75 | 386.35 | 136.35 | 132.06 |

**Movement, Approach, & Intersection Results**

| | | | | | | | | | | | | |
|---|---|---|---|---|---|---|---|---|---|---|---|---|
| d_M, Delay for Movement [s/veh] | 69.98 | 8.95 | 7.97 | 71.64 | 12.18 | 12.19 | 72.90 | 58.87 | 60.48 | 91.12 | 39.92 | 39.95 |
| Movement LOS | E | A | A | E | B | B | E | E | E | F | D | D |
| d_A, Approach Delay [s/veh] | 13.14 | | | 14.31 | | | 61.32 | | | 66.11 | | |
| Approach LOS | B | | | B | | | E | | | E | | |
| d_I, Intersection Delay [s/veh] | 29.05 | | | | | | | | | | | |
| Intersection LOS | C | | | | | | | | | | | |
| Intersection V/C | 0.622 | | | | | | | | | | | |

## Sequence

| | | | | | | | | | | | | | | | | |
|---|---|---|---|---|---|---|---|---|---|---|---|---|---|---|---|---|
| Ring 1 | 1 | 2 | 3 | 4 | - | - | - | - | - | - | - | - | - | - | - | - |
| Ring 2 | 5 | 6 | 7 | 8 | - | - | - | - | - | - | - | - | - | - | - | - |
| Ring 3 | - | - | - | - | - | - | - | - | - | - | - | - | - | - | - | - |
| Ring 4 | - | - | - | - | - | - | - | - | - | - | - | - | - | - | - | - |

**Intersection Level Of Service Report**
**Intersection 2: Sierra Ave (NS) / Valley Blvd (EW)**

| | | | |
|---|---|---|---|
| Control Type: | Signalized | Delay (sec / veh): | 29.2 |
| Analysis Method: | HCM 2010 | Level Of Service: | C |
| Analysis Period: | 15 minutes | Volume to Capacity (v/c): | 0.941 |

**Intersection Setup**

| Name | Sierra Avenue | | | Sierra Avenue | | | Valley Boulevard | | | Valley Boulevard | | |
|---|---|---|---|---|---|---|---|---|---|---|---|---|
| Approach | Northbound | | | Southbound | | | Eastbound | | | Westbound | | |
| Lane Configuration | | | | | | | | | | | | |
| Turning Movement | Left | Thru | Right | Left | Thru | Right | Left | Thru | Right | Left | Thru | Right |
| Lane Width [ft] | 12.00 | 12.00 | 12.00 | 12.00 | 12.00 | 12.00 | 12.00 | 12.00 | 12.00 | 12.00 | 12.00 | 12.00 |
| No. of Lanes in Pocket | 2 | 0 | 0 | 2 | 0 | 0 | 2 | 0 | 0 | 2 | 0 | 0 |
| Pocket Length [ft] | 370.00 | 100.00 | 100.00 | 165.00 | 100.00 | 100.00 | 260.00 | 100.00 | 100.00 | 355.00 | 100.00 | 100.00 |
| Speed [mph] | 35.00 | | | 35.00 | | | 40.00 | | | 40.00 | | |
| Grade [%] | 0.00 | | | 0.00 | | | 0.00 | | | 0.00 | | |
| Crosswalk | Yes | | | Yes | | | Yes | | | Yes | | |

**volumes**

| Name | Sierra Avenue | | | Sierra Avenue | | | Valley Boulevard | | | Valley Boulevard | | |
|---|---|---|---|---|---|---|---|---|---|---|---|---|
| Base Volume Input [veh/h] | 169 | 1085 | 948 | 58 | 1252 | 74 | 96 | 240 | 293 | 590 | 300 | 97 |
| Base Volume Adjustment Factor | 1.0000 | 1.0000 | 1.0000 | 1.0000 | 1.0000 | 1.0000 | 1.0000 | 1.0000 | 1.0000 | 1.0000 | 1.0000 | 1.0000 |
| Heavy Vehicles Percentage [%] | 2.00 | 2.00 | 2.00 | 2.00 | 2.00 | 2.00 | 4.00 | 4.00 | 4.00 | 4.00 | 4.00 | 4.00 |
| Growth Rate | 1.00 | 1.00 | 1.00 | 1.00 | 1.00 | 1.00 | 1.00 | 1.00 | 1.00 | 1.00 | 1.00 | 1.00 |
| In-Process Volume [veh/h] | 0 | 0 | 0 | 0 | 0 | 0 | 0 | 0 | 0 | 0 | 0 | 0 |
| Site-Generated Trips [veh/h] | 0 | 0 | 33 | 34 | 0 | 0 | 0 | 5 | 0 | 23 | 10 | 15 |
| Diverted Trips [veh/h] | 0 | 0 | 0 | 0 | 0 | 0 | 0 | 0 | 0 | 0 | 0 | 0 |
| Pass-by Trips [veh/h] | 0 | 0 | 0 | 0 | 0 | 0 | 0 | 0 | 0 | 0 | 0 | 0 |
| Existing Site Adjustment Volume [veh/h] | 0 | 0 | 0 | 0 | 0 | 0 | 0 | 0 | 0 | 0 | 0 | 0 |
| Other Volume [veh/h] | 0 | 0 | 0 | 0 | 0 | 0 | 0 | 0 | 0 | 0 | 0 | 0 |
| Right-Turn on Red Volume [veh/h] | 0 | 0 | 0 | 0 | 0 | 0 | 0 | 0 | 0 | 0 | 0 | 0 |
| Total Hourly Volume [veh/h] | 169 | 1085 | 981 | 92 | 1252 | 74 | 96 | 245 | 293 | 613 | 310 | 112 |
| Peak Hour Factor | 0.9720 | 0.9720 | 0.9720 | 0.9720 | 0.9720 | 0.9720 | 0.9720 | 0.9720 | 0.9720 | 0.9720 | 0.9720 | 0.9720 |
| Other Adjustment Factor | 1.0000 | 1.0000 | 1.0000 | 1.0000 | 1.0000 | 1.0000 | 1.0000 | 1.0000 | 1.0000 | 1.0000 | 1.0000 | 1.0000 |
| Total 15-Minute Volume [veh/h] | 43 | 279 | 252 | 24 | 322 | 19 | 25 | 63 | 75 | 158 | 80 | 29 |
| Total Analysis Volume [veh/h] | 174 | 1116 | 1009 | 95 | 1288 | 76 | 99 | 252 | 301 | 631 | 319 | 115 |
| Presence of On-Street Parking | No | | No | No | | No | No | | No | No | | No |
| On-Street Parking Maneuver Rate [/h] | 0 | 0 | 0 | 0 | 0 | 0 | 0 | 0 | 0 | 0 | 0 | 0 |
| Local Bus Stopping Rate [/h] | 0 | 0 | 0 | 0 | 0 | 0 | 0 | 0 | 0 | 0 | 0 | 0 |
| Pedestrian Volume [ped/h] | 0 | | | 0 | | | 0 | | | 0 | | |
| Bicycle Volume [bicycles/h] | 0 | | | 0 | | | 0 | | | 0 | | |

**Intersection Settings**

| | |
|---|---|
| Located in CBD | No |
| Signal Coordination Group | 1 - NS - Sierra |
| Cycle Length [s] | 120 |
| Coordination Type | Time of Day Pattern Coordinated |
| Actuation Type | Fully actuated |
| Offset [s] | 69.0 |
| Offset Reference | LagFO |
| Permissive Mode | SingleBand |
| Lost time [s] | 16.00 |

**Phasing & Timing**

| Control Type | Protecte | Permiss | Overlap | Protecte | Permiss | Permiss | Protecte | Permiss | Overlap | Protecte | Permiss | Overlap |
|---|---|---|---|---|---|---|---|---|---|---|---|---|
| Signal group | 5 | 2 | 2 | 1 | 6 | 0 | 3 | 8 | 8 | 7 | 4 | 4 |
| Auxiliary Signal Groups | | | 2,7 | | | | | | 5,8 | | | 1,4 |
| Lead / Lag | Lead | - | - | Lead | - | - | Lead | - | - | Lead | - | - |
| Minimum Green [s] | 5 | 5 | 5 | 5 | 5 | 0 | 5 | 5 | 5 | 5 | 5 | 5 |
| Maximum Green [s] | 30 | 30 | 30 | 30 | 30 | 0 | 30 | 30 | 30 | 30 | 30 | 30 |
| Amber [s] | 4.1 | 4.1 | 4.1 | 4.1 | 4.1 | 0.0 | 4.4 | 4.4 | 4.4 | 4.4 | 4.4 | 4.4 |
| All red [s] | 1.0 | 1.0 | 1.0 | 1.0 | 1.0 | 0.0 | 1.0 | 1.0 | 1.0 | 1.0 | 1.0 | 1.0 |
| Split [s] | 14 | 60 | 60 | 11 | 57 | 0 | 12 | 21 | 21 | 28 | 37 | 37 |
| Vehicle Extension [s] | 3.0 | 3.0 | 3.0 | 3.0 | 3.0 | 0.0 | 3.0 | 3.0 | 3.0 | 3.0 | 3.0 | 3.0 |
| Walk [s] | 0 | 7 | 7 | 0 | 7 | 0 | 0 | 5 | 5 | 0 | 5 | 5 |
| Pedestrian Clearance [s] | 0 | 24 | 24 | 0 | 26 | 0 | 0 | 10 | 10 | 0 | 10 | 10 |
| I1, Start-Up Lost Time [s] | 2.0 | 2.0 | 2.0 | 2.0 | 2.0 | 0.0 | 2.0 | 2.0 | 2.0 | 2.0 | 2.0 | 2.0 |
| I2, Clearance Lost Time [s] | 3.1 | 3.1 | 3.1 | 3.1 | 3.1 | 0.0 | 3.4 | 3.4 | 3.4 | 3.4 | 3.4 | 3.4 |
| Minimum Recall | No | No | No | No | No | | No | No | No | No | No | No |
| Maximum Recall | No | No | No | No | No | | No | No | No | No | No | No |
| Pedestrian Recall | No | No | No | No | No | | No | No | No | No | No | No |
| Detector Location [ft] | 0.0 | 0.0 | 0.0 | 0.0 | 0.0 | 0.0 | 0.0 | 0.0 | 0.0 | 0.0 | 0.0 | 0.0 |
| Detector Length [ft] | 0.0 | 0.0 | 0.0 | 0.0 | 0.0 | 0.0 | 0.0 | 0.0 | 0.0 | 0.0 | 0.0 | 0.0 |
| I, Upstream Filtering Factor | 1.00 | 1.00 | 1.00 | 1.00 | 1.00 | 1.00 | 1.00 | 1.00 | 1.00 | 1.00 | 1.00 | 1.00 |

**Exclusive Pedestrian Phase**

| | |
|---|---|
| Pedestrian Signal Group | 0 |
| Pedestrian Walk [s] | 0 |
| Pedestrian Clearance [s] | 0 |

**Lane Group Calculations**

| Lane Group | L | C | R | L | C | C | L | C | R | L | C | R |
|---|---|---|---|---|---|---|---|---|---|---|---|---|
| L, Total Lost Time per Cycle [s] | 5.10 | 5.10 | 5.40 | 5.10 | 5.10 | 5.10 | 5.40 | 5.40 | 5.10 | 5.40 | 5.40 | 5.10 |
| l1_p, Permitted Start-Up Lost Time [s] | 0.00 | 0.00 | 0.00 | 0.00 | 0.00 | 0.00 | 0.00 | 0.00 | 0.00 | 0.00 | 0.00 | 0.00 |
| l2, Clearance Lost Time [s] | 3.10 | 3.10 | 0.00 | 3.10 | 3.10 | 3.10 | 3.40 | 3.40 | 0.00 | 3.40 | 3.40 | 0.00 |
| g_i, Effective Green Time [s] | 9 | 59 | 87 | 6 | 56 | 56 | 5 | 11 | 26 | 23 | 28 | 40 |
| g / C, Green / Cycle | 0.07 | 0.49 | 0.72 | 0.05 | 0.47 | 0.47 | 0.04 | 0.09 | 0.21 | 0.19 | 0.24 | 0.33 |
| (v / s)_i Volume / Saturation Flow Rate | 0.05 | 0.31 | 0.64 | 0.03 | 0.25 | 0.25 | 0.03 | 0.07 | 0.19 | 0.19 | 0.09 | 0.07 |
| s, saturation flow rate [veh/h] | 3445 | 3547 | 1583 | 3445 | 3547 | 1810 | 3379 | 3478 | 1553 | 3379 | 3478 | 1553 |
| c, Capacity [veh/h] | 260 | 1746 | 1145 | 175 | 1658 | 846 | 153 | 326 | 333 | 637 | 824 | 517 |
| d1, Uniform Delay [s] | 52.59 | 14.33 | 0.92 | 54.68 | 15.34 | 15.34 | 55.51 | 51.33 | 41.75 | 44.87 | 34.29 | 23.84 |
| k, delay calibration | 0.11 | 0.50 | 0.50 | 0.11 | 0.50 | 0.50 | 0.11 | 0.11 | 0.50 | 0.11 | 0.11 | 0.49 |
| I, Upstream Filtering Factor | 1.00 | 1.00 | 1.00 | 1.00 | 1.00 | 1.00 | 1.00 | 1.00 | 1.00 | 1.00 | 1.00 | 1.00 |
| d2, Incremental Delay [s] | 2.97 | 1.81 | 9.84 | 2.63 | 1.29 | 2.51 | 4.51 | 3.90 | 30.22 | 14.47 | 0.30 | 0.98 |
| d3, Initial Queue Delay [s] | 0.00 | 0.00 | 0.00 | 0.00 | 0.00 | 0.00 | 0.00 | 0.00 | 0.00 | 0.00 | 0.00 | 0.00 |
| Rp, platoon ratio | 1.33 | 1.33 | 1.33 | 1.33 | 1.33 | 1.33 | 1.33 | 1.33 | 1.33 | 1.33 | 1.33 | 1.33 |
| PF, progression factor | 1.00 | 1.00 | 1.00 | 1.00 | 1.00 | 1.00 | 1.00 | 1.00 | 1.00 | 1.00 | 1.00 | 1.00 |

**Lane Group Results**

| | | | | | | | | | | | | |
|---|---|---|---|---|---|---|---|---|---|---|---|---|
| X, volume / capacity | 0.67 | 0.64 | 0.88 | 0.54 | 0.54 | 0.54 | 0.65 | 0.77 | 0.91 | 0.99 | 0.39 | 0.22 |
| d, Delay for Lane Group [s/veh] | 55.57 | 16.14 | 10.76 | 57.31 | 16.63 | 17.86 | 60.02 | 55.22 | 71.97 | 59.34 | 34.59 | 24.82 |
| Lane Group LOS | E | B | B | E | B | B | E | E | E | E | C | C |
| Critical Lane Group | No | No | Yes | Yes | No | No | No | No | Yes | Yes | No | No |
| 50th-Percentile Queue Length [veh] | 2.58 | 7.43 | 3.96 | 1.43 | 6.02 | 6.44 | 1.53 | 3.70 | 10.52 | 9.90 | 3.48 | 2.08 |
| 50th-Percentile Queue Length [ft] | 64.45 | 185.64 | 99.05 | 35.87 | 150.58 | 160.88 | 38.19 | 92.40 | 262.96 | 247.58 | 86.92 | 51.92 |
| 95th-Percentile Queue Length [veh] | 4.64 | 11.89 | 7.13 | 2.58 | 10.05 | 10.60 | 2.75 | 6.65 | 15.84 | 15.06 | 6.26 | 3.74 |
| 95th-Percentile Queue Length [ft] | 116.01 | 297.36 | 178.29 | 64.56 | 251.20 | 264.89 | 68.74 | 166.32 | 395.94 | 376.60 | 156.46 | 93.45 |

**Movement, Approach, & Intersection Results**

| | | | | | | | | | | | | |
|---|---|---|---|---|---|---|---|---|---|---|---|---|
| d_M, Delay for Movement [s/veh] | 55.57 | 16.14 | 10.76 | 57.31 | 17.00 | 17.86 | 60.02 | 55.22 | 71.97 | 59.34 | 34.59 | 24.82 |
| Movement LOS | E | B | B | E | B | B | E | E | E | E | C | C |
| d_A, Approach Delay [s/veh] | 16.76 | | | 19.67 | | | 63.68 | | | 48.20 | | |
| Approach LOS | B | | | B | | | E | | | D | | |
| d_I, Intersection Delay [s/veh] | 29.24 | | | | | | | | | | | |
| Intersection LOS | C | | | | | | | | | | | |
| Intersection V/C | 0.941 | | | | | | | | | | | |

## Sequence

| | | | | | | | | | | | | | | | | |
|---|---|---|---|---|---|---|---|---|---|---|---|---|---|---|---|---|
| Ring 1 | 1 | 2 | 3 | 4 | - | - | - | - | - | - | - | - | - | - | - | - |
| Ring 2 | 5 | 6 | 7 | 8 | - | - | - | - | - | - | - | - | - | - | - | - |
| Ring 3 | - | - | - | - | - | - | - | - | - | - | - | - | - | - | - | - |
| Ring 4 | - | - | - | - | - | - | - | - | - | - | - | - | - | - | - | - |

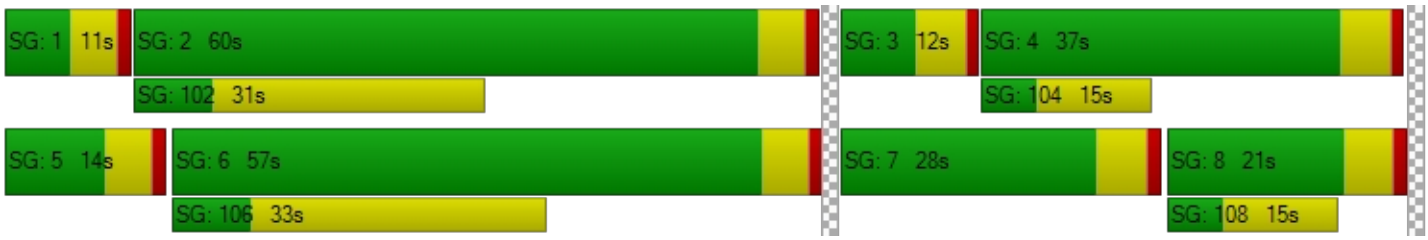

**Intersection Level Of Service Report**
**Intersection 3: Sierra Ave (NS) / I-10 Ramps (EW)**

| | | | |
|---|---|---|---|
| Control Type: | Signalized | Delay (sec / veh): | 25.8 |
| Analysis Method: | HCM 2010 | Level Of Service: | C |
| Analysis Period: | 15 minutes | Volume to Capacity (v/c): | 0.737 |

**Intersection Setup**

| Name | Sierra Avenue | | | Sierra Avenue | | | I-10 Ramps | | | | | |
|---|---|---|---|---|---|---|---|---|---|---|---|---|
| Approach | Northbound | | | Southbound | | | Eastbound | | | Westbound | | |
| Lane Configuration | | | | | | | | | | | | |
| Turning Movement | Left | Thru | Right | Left | Thru | Right | Left | Thru | Right | Left | Thru | Right |
| Lane Width [ft] | 12.00 | 12.00 | 12.00 | 12.00 | 12.00 | 12.00 | 12.00 | 12.00 | 12.00 | 12.00 | 12.00 | 12.00 |
| No. of Lanes in Pocket | 2 | 0 | 0 | 2 | 0 | 0 | 1 | 0 | 0 | 0 | 0 | 1 |
| Pocket Length [ft] | 540.00 | 100.00 | 100.00 | 295.00 | 100.00 | 100.00 | 430.00 | 100.00 | 100.00 | 100.00 | 100.00 | 520.00 |
| Speed [mph] | 40.00 | | | 35.00 | | | 30.00 | | | 30.00 | | |
| Grade [%] | 0.00 | | | 0.00 | | | 0.00 | | | 0.00 | | |
| Crosswalk | No | | | No | | | Yes | | | Yes | | |

**volumes**

| Name | Sierra Avenue | | | Sierra Avenue | | | I-10 Ramps | | | | | |
|---|---|---|---|---|---|---|---|---|---|---|---|---|
| Base Volume Input [veh/h] | 390 | 775 | 509 | 530 | 685 | 870 | 821 | 0 | 326 | 516 | 0 | 557 |
| Base Volume Adjustment Factor | 1.0000 | 1.0000 | 1.0000 | 1.0000 | 1.0000 | 1.0000 | 1.0000 | 1.0000 | 1.0000 | 1.0000 | 1.0000 | 1.0000 |
| Heavy Vehicles Percentage [%] | 2.00 | 2.00 | 2.00 | 2.00 | 2.00 | 2.00 | 2.00 | 2.00 | 2.00 | 2.00 | 2.00 | 2.00 |
| Growth Rate | 1.00 | 1.00 | 1.00 | 1.00 | 1.00 | 1.00 | 1.00 | 1.00 | 1.00 | 1.00 | 1.00 | 1.00 |
| In-Process Volume [veh/h] | 0 | 0 | 0 | 0 | 0 | 0 | 0 | 0 | 0 | 0 | 0 | 0 |
| Site-Generated Trips [veh/h] | 0 | 33 | 0 | 0 | 23 | 0 | 0 | 0 | 0 | -1 | 0 | 0 |
| Diverted Trips [veh/h] | 0 | 0 | 0 | 0 | 0 | 0 | 0 | 0 | 0 | 0 | 0 | 0 |
| Pass-by Trips [veh/h] | 0 | 0 | 0 | 0 | 0 | 0 | 0 | 0 | 0 | 0 | 0 | 0 |
| Existing Site Adjustment Volume [veh/h] | 0 | 0 | 0 | 0 | 0 | 0 | 0 | 0 | 0 | 0 | 0 | 0 |
| Other Volume [veh/h] | 0 | 0 | 0 | 0 | 0 | 0 | 0 | 0 | 0 | 0 | 0 | 0 |
| Right-Turn on Red Volume [veh/h] | 0 | 0 | 0 | 0 | 0 | 0 | 0 | 0 | 0 | 0 | 0 | 0 |
| Total Hourly Volume [veh/h] | 390 | 808 | 509 | 530 | 708 | 870 | 821 | 0 | 326 | 515 | 0 | 557 |
| Peak Hour Factor | 0.9830 | 0.9830 | 0.9830 | 0.9830 | 0.9830 | 0.9830 | 0.9830 | 1.0000 | 0.9830 | 0.9830 | 1.0000 | 0.9830 |
| Other Adjustment Factor | 1.0000 | 1.0000 | 1.0000 | 1.0000 | 1.0000 | 1.0000 | 1.0000 | 1.0000 | 1.0000 | 1.0000 | 1.0000 | 1.0000 |
| Total 15-Minute Volume [veh/h] | 99 | 205 | 129 | 135 | 180 | 221 | 209 | 0 | 83 | 131 | 0 | 142 |
| Total Analysis Volume [veh/h] | 397 | 822 | 518 | 539 | 720 | 885 | 835 | 0 | 332 | 524 | 0 | 567 |
| Presence of On-Street Parking | No | | No | No | | No | No | | No | No | | No |
| On-Street Parking Maneuver Rate [/h] | 0 | 0 | 0 | 0 | 0 | 0 | 0 | 0 | 0 | 0 | 0 | 0 |
| Local Bus Stopping Rate [/h] | 0 | 0 | 0 | 0 | 0 | 0 | 0 | 0 | 0 | 0 | 0 | 0 |
| Pedestrian Volume [ped/h] | 0 | | | 0 | | | 0 | | | 0 | | |
| Bicycle Volume [bicycles/h] | 0 | | | 0 | | | 0 | | | 0 | | |

**Intersection Settings**

| | |
|---|---|
| Located in CBD | No |
| Signal Coordination Group | 1 - NS - Sierra |
| Cycle Length [s] | 120 |
| Coordination Type | Time of Day Pattern Coordinated |
| Actuation Type | Fully actuated |
| Offset [s] | 90.0 |
| Offset Reference | LagFO |
| Permissive Mode | SingleBand |
| Lost time [s] | 12.00 |

**Phasing & Timing**

| Control Type | Permiss | Permiss | Overlap | Permiss | Permiss | Overlap | Permiss | Permiss | Overlap | Permiss | Permiss | Overlap |
|---|---|---|---|---|---|---|---|---|---|---|---|---|
| Signal group | 2 | 2 | 2 | 6 | 6 | 6 | 3 | 0 | 3 | 7 | 0 | 7 |
| Auxiliary Signal Groups | | | 2,3,6,7 | | | 2,3,6,7 | | | 2,3,6 | | | 2,6,7 |
| Lead / Lag | Lag | - | - | Lag | - | - | Lead | - | - | Lead | - | - |
| Minimum Green [s] | 5 | 5 | 5 | 5 | 5 | 5 | 5 | 0 | 5 | 5 | 0 | 5 |
| Maximum Green [s] | 30 | 30 | 30 | 30 | 30 | 30 | 30 | 0 | 30 | 30 | 0 | 30 |
| Amber [s] | 4.4 | 4.4 | 4.4 | 4.1 | 4.1 | 4.1 | 3.7 | 0.0 | 3.7 | 3.7 | 0.0 | 3.7 |
| All red [s] | 3.0 | 3.0 | 3.0 | 3.0 | 3.0 | 3.0 | 3.0 | 0.0 | 3.0 | 3.0 | 0.0 | 3.0 |
| Split [s] | 31 | 31 | 31 | 42 | 42 | 42 | 47 | 0 | 47 | 47 | 0 | 47 |
| Vehicle Extension [s] | 3.0 | 3.0 | 3.0 | 3.0 | 3.0 | 3.0 | 3.0 | 0.0 | 3.0 | 3.0 | 0.0 | 3.0 |
| Walk [s] | 7 | 7 | 7 | 7 | 7 | 7 | 7 | 0 | 7 | 7 | 0 | 7 |
| Pedestrian Clearance [s] | 15 | 15 | 15 | 15 | 15 | 15 | 15 | 0 | 15 | 15 | 0 | 15 |
| I1, Start-Up Lost Time [s] | 2.0 | 2.0 | 2.0 | 2.0 | 2.0 | 2.0 | 2.0 | 0.0 | 2.0 | 2.0 | 0.0 | 2.0 |
| I2, Clearance Lost Time [s] | 5.4 | 5.4 | 5.4 | 5.1 | 5.1 | 5.1 | 4.7 | 0.0 | 4.7 | 4.7 | 0.0 | 4.7 |
| Minimum Recall | | No | No | | No | No | No | | No | No | | No |
| Maximum Recall | | No | No | | No | No | No | | No | No | | No |
| Pedestrian Recall | | No | No | | No | No | No | | No | No | | No |
| Detector Location [ft] | 0.0 | 0.0 | 0.0 | 0.0 | 0.0 | 0.0 | 0.0 | 0.0 | 0.0 | 0.0 | 0.0 | 0.0 |
| Detector Length [ft] | 0.0 | 0.0 | 0.0 | 0.0 | 0.0 | 0.0 | 0.0 | 0.0 | 0.0 | 0.0 | 0.0 | 0.0 |
| I, Upstream Filtering Factor | 1.00 | 1.00 | 1.00 | 1.00 | 1.00 | 1.00 | 1.00 | 1.00 | 1.00 | 1.00 | 1.00 | 1.00 |

**Exclusive Pedestrian Phase**

| | |
|---|---|
| Pedestrian Signal Group | 0 |
| Pedestrian Walk [s] | 0 |
| Pedestrian Clearance [s] | 0 |

**Lane Group Calculations**

| Lane Group | L | C | R | L | C | R | L | R | L | R |
|---|---|---|---|---|---|---|---|---|---|---|
| L, Total Lost Time per Cycle [s] | 7.40 | 7.40 | 7.10 | 7.10 | 7.10 | 7.10 | 6.70 | 7.10 | 6.70 | 7.10 |
| l1_p, Permitted Start-Up Lost Time [s] | 2.00 | 0.00 | 0.00 | 2.00 | 0.00 | 0.00 | 2.00 | 0.00 | 2.00 | 0.00 |
| l2, Clearance Lost Time [s] | 5.40 | 5.40 | 0.00 | 5.10 | 5.10 | 0.00 | 4.70 | 5.40 | 4.70 | 0.00 |
| g_i, Effective Green Time [s] | 29 | 29 | 146 | 29 | 29 | 146 | 40 | 142 | 40 | 105 |
| g / C, Green / Cycle | 0.24 | 0.24 | 1.21 | 0.25 | 0.25 | 1.21 | 0.34 | 1.18 | 0.34 | 0.88 |
| (v / s)_i Volume / Saturation Flow Rate | 0.14 | 0.16 | 0.33 | 0.20 | 0.14 | 0.56 | 0.30 | 0.21 | 0.19 | 0.36 |
| s, saturation flow rate [veh/h] | 2741 | 5074 | 1583 | 2741 | 5074 | 1583 | 2741 | 1583 | 2741 | 1583 |
| c, Capacity [veh/h] | 680 | 1232 | 1923 | 688 | 1245 | 1923 | 927 | 1874 | 927 | 1392 |
| d1, Uniform Delay [s] | 37.34 | 36.37 | 0.00 | 39.49 | 35.21 | 0.00 | 40.30 | 0.00 | 34.64 | 0.68 |
| k, delay calibration | 0.50 | 0.50 | 0.50 | 0.50 | 0.50 | 0.50 | 0.11 | 0.50 | 0.11 | 0.50 |
| I, Upstream Filtering Factor | 1.00 | 1.00 | 1.00 | 1.00 | 1.00 | 1.00 | 1.00 | 1.00 | 1.00 | 1.00 |
| d2, Incremental Delay [s] | 3.65 | 2.87 | 0.34 | 8.68 | 1.96 | 0.80 | 3.51 | 0.21 | 0.54 | 0.89 |
| d3, Initial Queue Delay [s] | 0.00 | 0.00 | 0.00 | 0.00 | 0.00 | 0.00 | 0.00 | 0.00 | 0.00 | 0.00 |
| Rp, platoon ratio | 1.33 | 1.33 | 1.01 | 1.33 | 1.33 | 1.01 | 1.00 | 1.00 | 1.00 | 1.00 |
| PF, progression factor | 1.00 | 1.00 | 1.00 | 1.00 | 1.00 | 1.00 | 1.00 | 1.00 | 1.00 | 1.00 |

**Lane Group Results**

| | | | | | | | | | | |
|---|---|---|---|---|---|---|---|---|---|---|
| X, volume / capacity | 0.58 | 0.67 | 0.27 | 0.78 | 0.58 | 0.46 | 0.90 | 0.18 | 0.57 | 0.41 |
| d, Delay for Lane Group [s/veh] | 40.98 | 39.25 | 0.34 | 48.16 | 37.18 | 0.80 | 43.81 | 0.21 | 35.19 | 1.57 |
| Lane Group LOS | D | D | A | D | D | A | D | A | D | A |
| Critical Lane Group | No | Yes | No | Yes | No | No | Yes | No | No | No |
| 50th-Percentile Queue Length [veh] | 4.98 | 6.65 | 0.18 | 7.77 | 5.64 | 0.43 | 12.39 | 0.11 | 6.51 | 0.34 |
| 50th-Percentile Queue Length [ft] | 124.43 | 166.25 | 4.61 | 194.21 | 140.95 | 10.63 | 309.82 | 2.69 | 162.80 | 8.56 |
| 95th-Percentile Queue Length [veh] | 8.64 | 10.88 | 0.33 | 12.34 | 9.53 | 0.77 | 18.17 | 0.19 | 10.70 | 0.62 |
| 95th-Percentile Queue Length [ft] | 215.90 | 271.99 | 8.29 | 308.49 | 238.30 | 19.13 | 454.15 | 4.84 | 267.43 | 15.41 |

**Movement, Approach, & Intersection Results**

| | | | | | | | | | | | | |
|---|---|---|---|---|---|---|---|---|---|---|---|---|
| d_M, Delay for Movement [s/veh] | 40.98 | 39.25 | 0.34 | 48.16 | 37.18 | 0.80 | 43.81 | 0.00 | 0.21 | 35.19 | 0.00 | 1.57 |
| Movement LOS | D | D | A | D | D | A | D | | A | D | | A |
| d_A, Approach Delay [s/veh] | 28.04 | | | 24.92 | | | 31.40 | | | 17.72 | | |
| Approach LOS | C | | | C | | | C | | | B | | |
| d_I, Intersection Delay [s/veh] | 25.76 | | | | | | | | | | | |
| Intersection LOS | C | | | | | | | | | | | |
| Intersection V/C | 0.737 | | | | | | | | | | | |

## Sequence

| | | | | | | | | | | | | | | | | |
|---|---|---|---|---|---|---|---|---|---|---|---|---|---|---|---|---|
| Ring 1 | 2 | 6 | 3 | - | - | - | - | - | - | - | - | - | - | - | - | - |
| Ring 2 | - | - | 7 | - | - | - | - | - | - | - | - | - | - | - | - | - |
| Ring 3 | - | - | - | - | - | - | - | - | - | - | - | - | - | - | - | - |
| Ring 4 | - | - | - | - | - | - | - | - | - | - | - | - | - | - | - | - |

**Intersection Level Of Service Report**
**Intersection 4: Sierra Ave (NS) / Slover Ave (EW)**

| | | | |
|---|---|---|---|
| Control Type: | Signalized | Delay (sec / veh): | 28.2 |
| Analysis Method: | HCM 2010 | Level Of Service: | C |
| Analysis Period: | 15 minutes | Volume to Capacity (v/c): | 0.653 |

**Intersection Setup**

| Name | Sierra Avenue | | | Sierra Avenue | | | Slover Avenue | | | Slover Avenue | | |
|---|---|---|---|---|---|---|---|---|---|---|---|---|
| Approach | Northbound | | | Southbound | | | Eastbound | | | Westbound | | |
| Lane Configuration | | | | | | | | | | | | |
| Turning Movement | Left | Thru | Right | Left | Thru | Right | Left | Thru | Right | Left | Thru | Right |
| Lane Width [ft] | 12.00 | 12.00 | 12.00 | 12.00 | 12.00 | 12.00 | 12.00 | 12.00 | 12.00 | 12.00 | 12.00 | 12.00 |
| No. of Lanes in Pocket | 2 | 0 | 0 | 2 | 0 | 0 | 2 | 0 | 1 | 2 | 0 | 1 |
| Pocket Length [ft] | 195.00 | 100.00 | 100.00 | 615.00 | 100.00 | 100.00 | 290.00 | 100.00 | 290.00 | 230.00 | 100.00 | 300.00 |
| Speed [mph] | 50.00 | | | 40.00 | | | 45.00 | | | 45.00 | | |
| Grade [%] | 0.00 | | | 0.00 | | | 0.00 | | | 0.00 | | |
| Crosswalk | Yes | | | Yes | | | Yes | | | Yes | | |

**volumes**

| Name | Sierra Avenue | | | Sierra Avenue | | | Slover Avenue | | | Slover Avenue | | |
|---|---|---|---|---|---|---|---|---|---|---|---|---|
| Base Volume Input [veh/h] | 93 | 1079 | 112 | 486 | 716 | 229 | 276 | 173 | 49 | 64 | 174 | 349 |
| Base Volume Adjustment Factor | 1.0000 | 1.0000 | 1.0000 | 1.0000 | 1.0000 | 1.0000 | 1.0000 | 1.0000 | 1.0000 | 1.0000 | 1.0000 | 1.0000 |
| Heavy Vehicles Percentage [%] | 2.00 | 2.00 | 2.00 | 2.00 | 2.00 | 2.00 | 2.00 | 2.00 | 2.00 | 2.00 | 2.00 | 2.00 |
| Growth Rate | 1.00 | 1.00 | 1.00 | 1.00 | 1.00 | 1.00 | 1.00 | 1.00 | 1.00 | 1.00 | 1.00 | 1.00 |
| In-Process Volume [veh/h] | 0 | 0 | 0 | 0 | 0 | 0 | 0 | 0 | 0 | 0 | 0 | 0 |
| Site-Generated Trips [veh/h] | 0 | 22 | 0 | 0 | 17 | 5 | 11 | 0 | 0 | 0 | 0 | 0 |
| Diverted Trips [veh/h] | 0 | 0 | 0 | 0 | 0 | 0 | 0 | 0 | 0 | 0 | 0 | 0 |
| Pass-by Trips [veh/h] | 0 | 0 | 0 | 0 | 0 | 0 | 0 | 0 | 0 | 0 | 0 | 0 |
| Existing Site Adjustment Volume [veh/h] | 0 | 0 | 0 | 0 | 0 | 0 | 0 | 0 | 0 | 0 | 0 | 0 |
| Other Volume [veh/h] | 0 | 0 | 0 | 0 | 0 | 0 | 0 | 0 | 0 | 0 | 0 | 0 |
| Right-Turn on Red Volume [veh/h] | 0 | 0 | 0 | 0 | 0 | 0 | 0 | 0 | 0 | 0 | 0 | 0 |
| Total Hourly Volume [veh/h] | 93 | 1101 | 112 | 486 | 733 | 234 | 287 | 173 | 49 | 64 | 174 | 349 |
| Peak Hour Factor | 0.9580 | 0.9580 | 0.9580 | 0.9580 | 0.9580 | 0.9580 | 0.9580 | 0.9580 | 0.9580 | 0.9580 | 0.9580 | 0.9580 |
| Other Adjustment Factor | 1.0000 | 1.0000 | 1.0000 | 1.0000 | 1.0000 | 1.0000 | 1.0000 | 1.0000 | 1.0000 | 1.0000 | 1.0000 | 1.0000 |
| Total 15-Minute Volume [veh/h] | 24 | 287 | 29 | 127 | 191 | 61 | 75 | 45 | 13 | 17 | 45 | 91 |
| Total Analysis Volume [veh/h] | 97 | 1149 | 117 | 507 | 765 | 244 | 300 | 181 | 51 | 67 | 182 | 364 |
| Presence of On-Street Parking | No | | No | No | | No | No | | No | No | | No |
| On-Street Parking Maneuver Rate [/h] | 0 | 0 | 0 | 0 | 0 | 0 | 0 | 0 | 0 | 0 | 0 | 0 |
| Local Bus Stopping Rate [/h] | 0 | 0 | 0 | 0 | 0 | 0 | 0 | 0 | 0 | 0 | 0 | 0 |
| Pedestrian Volume [ped/h] | 0 | | | 0 | | | 0 | | | 0 | | |
| Bicycle Volume [bicycles/h] | 0 | | | 0 | | | 0 | | | 0 | | |

**Intersection Settings**

| | |
|---|---|
| Located in CBD | No |
| Signal Coordination Group | 1 - NS - Sierra |
| Cycle Length [s] | 120 |
| Coordination Type | Time of Day Pattern Coordinated |
| Actuation Type | Fully actuated |
| Offset [s] | 22.0 |
| Offset Reference | LagFO |
| Permissive Mode | SingleBand |
| Lost time [s] | 16.00 |

**Phasing & Timing**

| Control Type | Protecte | Permiss | Permiss | Protecte | Permiss | Permiss | Protecte | Permiss | Permiss | Protecte | Permiss | Overlap |
|---|---|---|---|---|---|---|---|---|---|---|---|---|
| Signal group | 5 | 2 | 0 | 1 | 6 | 0 | 3 | 8 | 0 | 7 | 4 | 4 |
| Auxiliary Signal Groups | | | | | | | | | | | | 1,4 |
| Lead / Lag | Lead | - | - | Lead | - | - | Lead | - | - | Lead | - | - |
| Minimum Green [s] | 5 | 5 | 0 | 5 | 5 | 0 | 5 | 5 | 0 | 5 | 5 | 5 |
| Maximum Green [s] | 30 | 30 | 0 | 30 | 30 | 0 | 30 | 30 | 0 | 30 | 30 | 30 |
| Amber [s] | 5.2 | 5.2 | 0.0 | 4.4 | 4.4 | 0.0 | 4.8 | 4.8 | 0.0 | 4.8 | 4.8 | 4.8 |
| All red [s] | 1.0 | 1.0 | 0.0 | 1.0 | 1.0 | 0.0 | 1.0 | 1.0 | 0.0 | 1.0 | 1.0 | 1.0 |
| Split [s] | 12 | 50 | 0 | 30 | 68 | 0 | 19 | 28 | 0 | 12 | 21 | 21 |
| Vehicle Extension [s] | 3.0 | 3.0 | 0.0 | 3.0 | 3.0 | 0.0 | 3.0 | 3.0 | 0.0 | 3.0 | 3.0 | 3.0 |
| Walk [s] | 0 | 7 | 0 | 0 | 7 | 0 | 0 | 5 | 0 | 0 | 5 | 5 |
| Pedestrian Clearance [s] | 0 | 22 | 0 | 0 | 20 | 0 | 0 | 10 | 0 | 0 | 10 | 10 |
| I1, Start-Up Lost Time [s] | 2.0 | 2.0 | 0.0 | 2.0 | 2.0 | 0.0 | 2.0 | 2.0 | 0.0 | 2.0 | 2.0 | 2.0 |
| I2, Clearance Lost Time [s] | 4.2 | 4.2 | 0.0 | 3.4 | 3.4 | 0.0 | 3.8 | 3.8 | 0.0 | 3.8 | 3.8 | 3.8 |
| Minimum Recall | No | No | | No | No | | No | No | | No | No | No |
| Maximum Recall | No | No | | No | No | | No | No | | No | No | No |
| Pedestrian Recall | No | No | | No | No | | No | No | | No | No | No |
| Detector Location [ft] | 0.0 | 0.0 | 0.0 | 0.0 | 0.0 | 0.0 | 0.0 | 0.0 | 0.0 | 0.0 | 0.0 | 0.0 |
| Detector Length [ft] | 0.0 | 0.0 | 0.0 | 0.0 | 0.0 | 0.0 | 0.0 | 0.0 | 0.0 | 0.0 | 0.0 | 0.0 |
| I, Upstream Filtering Factor | 1.00 | 1.00 | 1.00 | 1.00 | 1.00 | 1.00 | 1.00 | 1.00 | 1.00 | 1.00 | 1.00 | 1.00 |

**Exclusive Pedestrian Phase**

| | |
|---|---|
| Pedestrian Signal Group | 0 |
| Pedestrian Walk [s] | 0 |
| Pedestrian Clearance [s] | 0 |

**Lane Group Calculations**

| Lane Group | L | C | R | L | C | C | L | C | R | L | C | R |
|---|---|---|---|---|---|---|---|---|---|---|---|---|
| L, Total Lost Time per Cycle [s] | 6.20 | 6.20 | 6.20 | 5.40 | 5.40 | 5.40 | 5.80 | 5.80 | 5.80 | 5.80 | 5.80 | 5.40 |
| l1_p, Permitted Start-Up Lost Time [s] | 0.00 | 0.00 | 0.00 | 0.00 | 0.00 | 0.00 | 0.00 | 0.00 | 0.00 | 0.00 | 0.00 | 0.00 |
| l2, Clearance Lost Time [s] | 4.20 | 4.20 | 4.20 | 3.40 | 3.40 | 3.40 | 3.80 | 3.80 | 3.80 | 3.80 | 3.80 | 0.00 |
| g_i, Effective Green Time [s] | 5 | 55 | 55 | 20 | 70 | 70 | 12 | 17 | 17 | 5 | 9 | 35 |
| g / C, Green / Cycle | 0.04 | 0.46 | 0.46 | 0.17 | 0.59 | 0.59 | 0.10 | 0.14 | 0.14 | 0.04 | 0.07 | 0.29 |
| (v / s)_i Volume / Saturation Flow Rate | 0.03 | 0.23 | 0.07 | 0.15 | 0.19 | 0.19 | 0.09 | 0.05 | 0.03 | 0.02 | 0.05 | 0.13 |
| s, saturation flow rate [veh/h] | 3445 | 5074 | 1583 | 3445 | 3547 | 1641 | 3445 | 3547 | 1583 | 3445 | 3547 | 2803 |
| c, Capacity [veh/h] | 149 | 2323 | 725 | 588 | 2076 | 961 | 357 | 497 | 222 | 131 | 265 | 823 |
| d1, Uniform Delay [s] | 55.68 | 15.64 | 13.43 | 45.01 | 6.23 | 6.23 | 52.85 | 46.78 | 45.87 | 56.66 | 54.19 | 34.42 |
| k, delay calibration | 0.11 | 0.50 | 0.50 | 0.11 | 0.50 | 0.50 | 0.11 | 0.11 | 0.11 | 0.11 | 0.11 | 0.11 |
| I, Upstream Filtering Factor | 1.00 | 1.00 | 1.00 | 1.00 | 1.00 | 1.00 | 1.00 | 1.00 | 1.00 | 1.00 | 1.00 | 1.00 |
| d2, Incremental Delay [s] | 4.69 | 0.76 | 0.48 | 3.88 | 0.43 | 0.93 | 5.36 | 0.45 | 0.52 | 3.06 | 3.16 | 0.37 |
| d3, Initial Queue Delay [s] | 0.00 | 0.00 | 0.00 | 0.00 | 0.00 | 0.00 | 0.00 | 0.00 | 0.00 | 0.00 | 0.00 | 0.00 |
| Rp, platoon ratio | 1.33 | 1.33 | 1.33 | 1.33 | 1.33 | 1.33 | 1.00 | 1.00 | 1.00 | 1.00 | 1.00 | 1.00 |
| PF, progression factor | 1.00 | 1.00 | 1.00 | 1.00 | 1.00 | 1.00 | 1.00 | 1.00 | 1.00 | 1.00 | 1.00 | 1.00 |

**Lane Group Results**

| | | | | | | | | | | | | |
|---|---|---|---|---|---|---|---|---|---|---|---|---|
| X, volume / capacity | 0.65 | 0.49 | 0.16 | 0.86 | 0.33 | 0.33 | 0.84 | 0.36 | 0.23 | 0.51 | 0.69 | 0.44 |
| d, Delay for Lane Group [s/veh] | 60.38 | 16.39 | 13.91 | 48.90 | 6.66 | 7.16 | 58.21 | 47.23 | 46.39 | 59.72 | 57.35 | 34.80 |
| Lane Group LOS | E | B | B | D | A | A | E | D | D | E | E | C |
| Critical Lane Group | No | Yes | No | Yes | No | No | Yes | No | No | No | No | Yes |
| 50th-Percentile Queue Length [veh] | 1.48 | 4.85 | 1.36 | 7.04 | 2.25 | 2.22 | 4.59 | 2.43 | 1.36 | 1.03 | 2.73 | 4.23 |
| 50th-Percentile Queue Length [ft] | 36.98 | 121.21 | 34.05 | 175.97 | 56.26 | 55.41 | 114.82 | 60.63 | 33.88 | 25.76 | 68.35 | 105.63 |
| 95th-Percentile Queue Length [veh] | 2.66 | 8.46 | 2.45 | 11.39 | 4.05 | 3.99 | 8.11 | 4.37 | 2.44 | 1.85 | 4.92 | 7.60 |
| 95th-Percentile Queue Length [ft] | 66.56 | 211.49 | 61.29 | 284.74 | 101.27 | 99.74 | 202.69 | 109.13 | 60.98 | 46.36 | 123.04 | 189.90 |

**Movement, Approach, & Intersection Results**

| | | | | | | | | | | | | |
|---|---|---|---|---|---|---|---|---|---|---|---|---|
| d_M, Delay for Movement [s/veh] | 60.38 | 16.39 | 13.91 | 48.90 | 6.71 | 7.16 | 58.21 | 47.23 | 46.39 | 59.72 | 57.35 | 34.80 |
| Movement LOS | E | B | B | D | A | A | E | D | D | E | E | C |
| d_A, Approach Delay [s/veh] | 19.31 | | | 20.89 | | | 53.34 | | | 44.22 | | |
| Approach LOS | B | | | C | | | D | | | D | | |
| d_I, Intersection Delay [s/veh] | 28.20 | | | | | | | | | | | |
| Intersection LOS | C | | | | | | | | | | | |
| Intersection V/C | 0.653 | | | | | | | | | | | |

## Sequence

| | | | | | | | | | | | | | | | | |
|---|---|---|---|---|---|---|---|---|---|---|---|---|---|---|---|---|
| Ring 1 | 1 | 2 | 3 | 4 | - | - | - | - | - | - | - | - | - | - | - | - |
| Ring 2 | 5 | 6 | 7 | 8 | - | - | - | - | - | - | - | - | - | - | - | - |
| Ring 3 | - | - | - | - | - | - | - | - | - | - | - | - | - | - | - | - |
| Ring 4 | - | - | - | - | - | - | - | - | - | - | - | - | - | - | - | - |

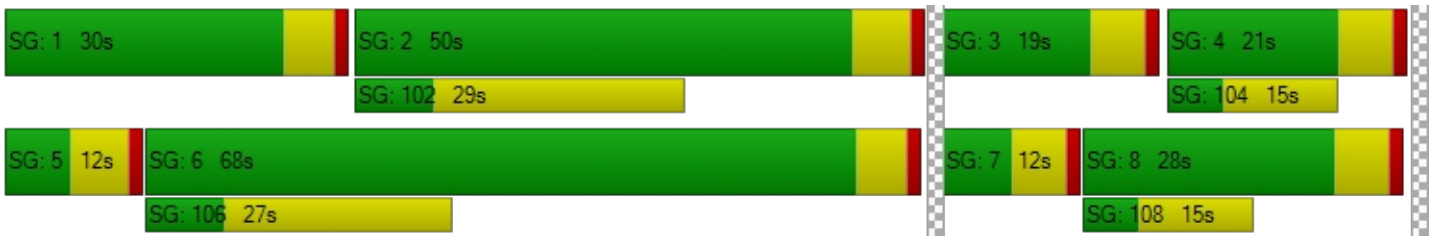

**Intersection Level Of Service Report**
**Intersection 5: Palmetto Ave (NS) / Valley Blvd (EW)**

| | | | |
|---|---|---|---|
| Control Type: | Signalized | Delay (sec / veh): | 21.2 |
| Analysis Method: | HCM 2010 | Level Of Service: | C |
| Analysis Period: | 15 minutes | Volume to Capacity (v/c): | 0.473 |

**Intersection Setup**

| Name | Palmetto Avenue | | Valley Boulevard | | Valley Boulevard | |
|---|---|---|---|---|---|---|
| Approach | Southbound | | Eastbound | | Westbound | |
| Lane Configuration | | | | | | |
| Turning Movement | Left | Right | Left | Thru | Thru | Right |
| Lane Width [ft] | 12.00 | 12.00 | 12.00 | 12.00 | 12.00 | 12.00 |
| No. of Lanes in Pocket | 0 | 0 | 1 | 0 | 0 | 0 |
| Pocket Length [ft] | 100.00 | 100.00 | 150.00 | 100.00 | 100.00 | 100.00 |
| Speed [mph] | 35.00 | | 40.00 | | 40.00 | |
| Grade [%] | 0.00 | | 0.00 | | 0.00 | |
| Crosswalk | Yes | | Yes | | No | |

**volumes**

| Name | Palmetto Avenue | | Valley Boulevard | | Valley Boulevard | |
|---|---|---|---|---|---|---|
| Base Volume Input [veh/h] | 31 | 262 | 137 | 358 | 528 | 33 |
| Base Volume Adjustment Factor | 1.0000 | 1.0000 | 1.0000 | 1.0000 | 1.0000 | 1.0000 |
| Heavy Vehicles Percentage [%] | 2.00 | 2.00 | 4.00 | 4.00 | 4.00 | 4.00 |
| Growth Rate | 1.00 | 1.00 | 1.00 | 1.00 | 1.00 | 1.00 |
| In-Process Volume [veh/h] | 0 | 0 | 0 | 0 | 0 | 0 |
| Site-Generated Trips [veh/h] | 22 | 0 | 0 | 77 | 58 | 8 |
| Diverted Trips [veh/h] | 0 | 0 | 0 | 0 | 0 | 0 |
| Pass-by Trips [veh/h] | 0 | 0 | 0 | 0 | 0 | 0 |
| Existing Site Adjustment Volume [veh/h] | 0 | 0 | 0 | 0 | 0 | 0 |
| Other Volume [veh/h] | 0 | 0 | 0 | 0 | 0 | 0 |
| Right-Turn on Red Volume [veh/h] | 0 | 0 | 0 | 0 | 0 | 0 |
| Total Hourly Volume [veh/h] | 53 | 262 | 137 | 435 | 586 | 41 |
| Peak Hour Factor | 0.9270 | 0.9270 | 0.9270 | 0.9270 | 0.9270 | 0.9270 |
| Other Adjustment Factor | 1.0000 | 1.0000 | 1.0000 | 1.0000 | 1.0000 | 1.0000 |
| Total 15-Minute Volume [veh/h] | 14 | 71 | 37 | 117 | 158 | 11 |
| Total Analysis Volume [veh/h] | 57 | 283 | 148 | 469 | 632 | 44 |
| Presence of On-Street Parking | No | No | No | No | No | No |
| On-Street Parking Maneuver Rate [/h] | 0 | 0 | 0 | 0 | 0 | 0 |
| Local Bus Stopping Rate [/h] | 0 | 0 | 0 | 0 | 0 | 0 |
| Pedestrian Volume [ped/h] | 0 | | 0 | | 0 | |
| Bicycle Volume [bicycles/h] | 0 | | 0 | | 0 | |

**Intersection Settings**

| | |
|---|---|
| Located in CBD | No |
| Signal Coordination Group | 3 - EW - Valley |
| Cycle Length [s] | 120 |
| Coordination Type | Time of Day Pattern Coordinated |
| Actuation Type | Fully actuated |
| Offset [s] | 0.0 |
| Offset Reference | LagFO |
| Permissive Mode | SingleBand |
| Lost time [s] | 12.00 |

**Phasing & Timing**

| Control Type | Split | Split | Protected | Permissive | Permissive | Permissive |
|---|---|---|---|---|---|---|
| Signal group | 1 | 0 | 3 | 8 | 4 | 0 |
| Auxiliary Signal Groups | | | | | | |
| Lead / Lag | Lead | - | Lead | - | - | - |
| Minimum Green [s] | 5 | 0 | 5 | 5 | 5 | 0 |
| Maximum Green [s] | 30 | 0 | 30 | 30 | 30 | 0 |
| Amber [s] | 4.1 | 0.0 | 4.4 | 4.4 | 4.4 | 0.0 |
| All red [s] | 1.0 | 0.0 | 1.0 | 1.0 | 1.0 | 0.0 |
| Split [s] | 54 | 0 | 24 | 66 | 42 | 0 |
| Vehicle Extension [s] | 3.0 | 0.0 | 3.0 | 3.0 | 3.0 | 0.0 |
| Walk [s] | 7 | 0 | 0 | 7 | 7 | 0 |
| Pedestrian Clearance [s] | 26 | 0 | 0 | 17 | 17 | 0 |
| I1, Start-Up Lost Time [s] | 2.0 | 0.0 | 2.0 | 2.0 | 2.0 | 0.0 |
| I2, Clearance Lost Time [s] | 3.1 | 0.0 | 3.4 | 3.4 | 3.4 | 0.0 |
| Minimum Recall | No | | No | No | No | |
| Maximum Recall | No | | No | No | No | |
| Pedestrian Recall | No | | No | No | No | |
| Detector Location [ft] | 0.0 | 0.0 | 0.0 | 0.0 | 0.0 | 0.0 |
| Detector Length [ft] | 0.0 | 0.0 | 0.0 | 0.0 | 0.0 | 0.0 |
| I, Upstream Filtering Factor | 1.00 | 1.00 | 1.00 | 1.00 | 1.00 | 1.00 |

**Exclusive Pedestrian Phase**

| | |
|---|---|
| Pedestrian Signal Group | 0 |
| Pedestrian Walk [s] | 0 |
| Pedestrian Clearance [s] | 0 |

**Lane Group Calculations**

| Lane Group | C | L | C | C | C |
|---|---|---|---|---|---|
| L, Total Lost Time per Cycle [s] | 5.10 | 5.40 | 5.40 | 5.40 | 5.40 |
| l1_p, Permitted Start-Up Lost Time [s] | 0.00 | 0.00 | 0.00 | 0.00 | 0.00 |
| l2, Clearance Lost Time [s] | 3.10 | 3.40 | 3.40 | 3.40 | 3.40 |
| g_i, Effective Green Time [s] | 28 | 12 | 82 | 64 | 64 |
| g / C, Green / Cycle | 0.23 | 0.10 | 0.68 | 0.54 | 0.54 |
| (v / s)_i Volume / Saturation Flow Rate | 0.21 | 0.09 | 0.13 | 0.13 | 0.13 |
| s, saturation flow rate [veh/h] | 1612 | 1740 | 3478 | 3478 | 1766 |
| c, Capacity [veh/h] | 370 | 177 | 2375 | 1866 | 947 |
| d1, Uniform Delay [s] | 45.11 | 50.89 | 1.78 | 8.68 | 8.67 |
| k, delay calibration | 0.11 | 0.11 | 0.50 | 0.50 | 0.50 |
| I, Upstream Filtering Factor | 1.00 | 1.00 | 1.00 | 1.00 | 1.00 |
| d2, Incremental Delay [s] | 9.42 | 10.02 | 0.19 | 0.31 | 0.59 |
| d3, Initial Queue Delay [s] | 0.00 | 0.00 | 0.00 | 0.00 | 0.00 |
| Rp, platoon ratio | 1.00 | 1.33 | 1.33 | 1.33 | 1.33 |
| PF, progression factor | 1.00 | 1.00 | 1.00 | 1.00 | 1.00 |

**Lane Group Results**

| | | | | | |
|---|---|---|---|---|---|
| X, volume / capacity | 0.92 | 0.84 | 0.20 | 0.24 | 0.24 |
| d, Delay for Lane Group [s/veh] | 54.52 | 60.91 | 1.97 | 8.99 | 9.26 |
| Lane Group LOS | D | E | A | A | A |
| Critical Lane Group | Yes | Yes | No | Yes | No |
| 50th-Percentile Queue Length [veh] | 10.69 | 4.62 | 0.56 | 1.90 | 1.98 |
| 50th-Percentile Queue Length [ft] | 267.19 | 115.47 | 14.00 | 47.56 | 49.41 |
| 95th-Percentile Queue Length [veh] | 16.05 | 8.14 | 1.01 | 3.42 | 3.56 |
| 95th-Percentile Queue Length [ft] | 401.23 | 203.59 | 25.20 | 85.61 | 88.93 |

**Movement, Approach, & Intersection Results**

| | | | | | | |
|---|---|---|---|---|---|---|
| d_M, Delay for Movement [s/veh] | 54.52 | 54.52 | 60.91 | 1.97 | 9.07 | 9.26 |
| Movement LOS | D | D | E | A | A | A |
| d_A, Approach Delay [s/veh] | 54.52 | | 16.11 | | 9.08 | |
| Approach LOS | D | | B | | A | |
| d_I, Intersection Delay [s/veh] | 21.20 | | | | | |
| Intersection LOS | C | | | | | |
| Intersection V/C | 0.473 | | | | | |

## Sequence

| | | | | | | | | | | | | | | | | |
|---|---|---|---|---|---|---|---|---|---|---|---|---|---|---|---|---|
| Ring 1 | 1 | 3 | 4 | - | - | - | - | - | - | - | - | - | - | - | - | - |
| Ring 2 | - | - | 8 | - | - | - | - | - | - | - | - | - | - | - | - | - |
| Ring 3 | - | - | - | - | - | - | - | - | - | - | - | - | - | - | - | - |
| Ring 4 | - | - | - | - | - | - | - | - | - | - | - | - | - | - | - | - |

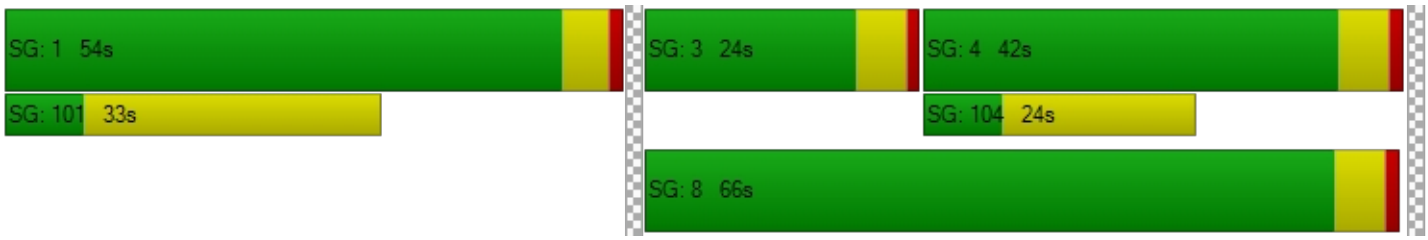

**Intersection Level Of Service Report**
**Intersection 6: Alder Ave (NS) / San Bernardino Ave (EW)**

| | | | |
|---|---|---|---|
| Control Type: | Signalized | Delay (sec / veh): | 15.9 |
| Analysis Method: | HCM 2010 | Level Of Service: | B |
| Analysis Period: | 15 minutes | Volume to Capacity (v/c): | 0.468 |

**Intersection Setup**

| Name | Alder Avenue | | | Alder Avenue | | | San Bernardino Avenue | | | San Bernardino Avenue | | |
|---|---|---|---|---|---|---|---|---|---|---|---|---|
| Approach | Northbound | | | Southbound | | | Eastbound | | | Westbound | | |
| Lane Configuration | | | | | | | | | | | | |
| Turning Movement | Left | Thru | Right | Left | Thru | Right | Left | Thru | Right | Left | Thru | Right |
| Lane Width [ft] | 12.00 | 12.00 | 12.00 | 12.00 | 12.00 | 12.00 | 12.00 | 12.00 | 12.00 | 12.00 | 12.00 | 12.00 |
| No. of Lanes in Pocket | 1 | 0 | 0 | 1 | 0 | 0 | 1 | 0 | 0 | 1 | 0 | 0 |
| Pocket Length [ft] | 100.00 | 100.00 | 100.00 | 100.00 | 100.00 | 100.00 | 100.00 | 100.00 | 100.00 | 80.00 | 100.00 | 100.00 |
| Speed [mph] | 40.00 | | | 40.00 | | | 35.00 | | | 35.00 | | |
| Grade [%] | 0.00 | | | 0.00 | | | 0.00 | | | 0.00 | | |
| Crosswalk | Yes | | | Yes | | | Yes | | | Yes | | |

**volumes**

| Name | Alder Avenue | | | Alder Avenue | | | San Bernardino Avenue | | | San Bernardino Avenue | | |
|---|---|---|---|---|---|---|---|---|---|---|---|---|
| Base Volume Input [veh/h] | 7 | 153 | 28 | 19 | 398 | 66 | 31 | 93 | 44 | 76 | 153 | 20 |
| Base Volume Adjustment Factor | 1.0000 | 1.0000 | 1.0000 | 1.0000 | 1.0000 | 1.0000 | 1.0000 | 1.0000 | 1.0000 | 1.0000 | 1.0000 | 1.0000 |
| Heavy Vehicles Percentage [%] | 2.00 | 2.00 | 2.00 | 2.00 | 2.00 | 2.00 | 2.00 | 2.00 | 2.00 | 2.00 | 2.00 | 2.00 |
| Growth Rate | 1.00 | 1.00 | 1.00 | 1.00 | 1.00 | 1.00 | 1.00 | 1.00 | 1.00 | 1.00 | 1.00 | 1.00 |
| In-Process Volume [veh/h] | 0 | 0 | 0 | 0 | 0 | 0 | 0 | 0 | 0 | 0 | 0 | 0 |
| Site-Generated Trips [veh/h] | 5 | 15 | 0 | 0 | 37 | 0 | 0 | 0 | 11 | 0 | 0 | 0 |
| Diverted Trips [veh/h] | 0 | 0 | 0 | 0 | 0 | 0 | 0 | 0 | 0 | 0 | 0 | 0 |
| Pass-by Trips [veh/h] | 0 | 0 | 0 | 0 | 0 | 0 | 0 | 0 | 0 | 0 | 0 | 0 |
| Existing Site Adjustment Volume [veh/h] | 0 | 0 | 0 | 0 | 0 | 0 | 0 | 0 | 0 | 0 | 0 | 0 |
| Other Volume [veh/h] | 0 | 0 | 0 | 0 | 0 | 0 | 0 | 0 | 0 | 0 | 0 | 0 |
| Right-Turn on Red Volume [veh/h] | 0 | 0 | 0 | 0 | 0 | 0 | 0 | 0 | 0 | 0 | 0 | 0 |
| Total Hourly Volume [veh/h] | 12 | 168 | 28 | 19 | 435 | 66 | 31 | 93 | 55 | 76 | 153 | 20 |
| Peak Hour Factor | 0.8530 | 0.8530 | 0.8530 | 0.8530 | 0.8530 | 0.8530 | 0.8530 | 0.8530 | 0.8530 | 0.8530 | 0.8530 | 0.8530 |
| Other Adjustment Factor | 1.0000 | 1.0000 | 1.0000 | 1.0000 | 1.0000 | 1.0000 | 1.0000 | 1.0000 | 1.0000 | 1.0000 | 1.0000 | 1.0000 |
| Total 15-Minute Volume [veh/h] | 4 | 49 | 8 | 6 | 127 | 19 | 9 | 27 | 16 | 22 | 45 | 6 |
| Total Analysis Volume [veh/h] | 14 | 197 | 33 | 22 | 510 | 77 | 36 | 109 | 64 | 89 | 179 | 23 |
| Presence of On-Street Parking | No | | No | No | | No | No | | No | No | | No |
| On-Street Parking Maneuver Rate [/h] | 0 | 0 | 0 | 0 | 0 | 0 | 0 | 0 | 0 | 0 | 0 | 0 |
| Local Bus Stopping Rate [/h] | 0 | 0 | 0 | 0 | 0 | 0 | 0 | 0 | 0 | 0 | 0 | 0 |
| Pedestrian Volume [ped/h] | 0 | | | 0 | | | 0 | | | 0 | | |
| Bicycle Volume [bicycles/h] | 0 | | | 0 | | | 0 | | | 0 | | |

**Intersection Settings**

| | |
|---|---|
| Located in CBD | No |
| Signal Coordination Group | - |
| Cycle Length [s] | 100 |
| Coordination Type | Time of Day Pattern Isolated |
| Actuation Type | Fully actuated |
| Offset [s] | 0.0 |
| Offset Reference | LagFO |
| Permissive Mode | SingleBand |
| Lost time [s] | 16.00 |

**Phasing & Timing**

| Control Type | Protecte | Permiss | Permiss | Protecte | Permiss | Permiss | Protecte | Permiss | Permiss | Protecte | Permiss | Permiss |
|---|---|---|---|---|---|---|---|---|---|---|---|---|
| Signal group | 5 | 2 | 0 | 1 | 6 | 0 | 3 | 8 | 0 | 7 | 4 | 0 |
| Auxiliary Signal Groups | | | | | | | | | | | | |
| Lead / Lag | Lead | - | - | Lead | - | - | Lead | - | - | Lead | - | - |
| Minimum Green [s] | 5 | 5 | 0 | 5 | 5 | 0 | 5 | 5 | 0 | 5 | 5 | 0 |
| Maximum Green [s] | 30 | 30 | 0 | 30 | 30 | 0 | 30 | 30 | 0 | 30 | 30 | 0 |
| Amber [s] | 4.4 | 4.4 | 0.0 | 4.4 | 4.4 | 0.0 | 4.1 | 4.1 | 0.0 | 4.1 | 4.1 | 0.0 |
| All red [s] | 1.0 | 1.0 | 0.0 | 1.0 | 1.0 | 0.0 | 1.0 | 1.0 | 0.0 | 1.0 | 1.0 | 0.0 |
| Split [s] | 15 | 40 | 0 | 12 | 37 | 0 | 11 | 37 | 0 | 11 | 37 | 0 |
| Vehicle Extension [s] | 3.0 | 3.0 | 0.0 | 3.0 | 3.0 | 0.0 | 3.0 | 3.0 | 0.0 | 3.0 | 3.0 | 0.0 |
| Walk [s] | 0 | 7 | 0 | 0 | 7 | 0 | 0 | 7 | 0 | 0 | 7 | 0 |
| Pedestrian Clearance [s] | 0 | 24 | 0 | 0 | 24 | 0 | 0 | 24 | 0 | 0 | 24 | 0 |
| I1, Start-Up Lost Time [s] | 2.0 | 2.0 | 0.0 | 2.0 | 2.0 | 0.0 | 2.0 | 2.0 | 0.0 | 2.0 | 2.0 | 0.0 |
| I2, Clearance Lost Time [s] | 3.4 | 3.4 | 0.0 | 3.4 | 3.4 | 0.0 | 3.1 | 3.1 | 0.0 | 3.1 | 3.1 | 0.0 |
| Minimum Recall | No | No | | No | No | | No | No | | No | No | |
| Maximum Recall | No | No | | No | No | | No | No | | No | No | |
| Pedestrian Recall | No | No | | No | No | | No | No | | No | No | |
| Detector Location [ft] | 0.0 | 0.0 | 0.0 | 0.0 | 0.0 | 0.0 | 0.0 | 0.0 | 0.0 | 0.0 | 0.0 | 0.0 |
| Detector Length [ft] | 0.0 | 0.0 | 0.0 | 0.0 | 0.0 | 0.0 | 0.0 | 0.0 | 0.0 | 0.0 | 0.0 | 0.0 |
| I, Upstream Filtering Factor | 1.00 | 1.00 | 1.00 | 1.00 | 1.00 | 1.00 | 1.00 | 1.00 | 1.00 | 1.00 | 1.00 | 1.00 |

**Exclusive Pedestrian Phase**

| | |
|---|---|
| Pedestrian Signal Group | 0 |
| Pedestrian Walk [s] | 0 |
| Pedestrian Clearance [s] | 0 |

**Lane Group Calculations**

| Lane Group | L | C | C | L | C | C | L | C | C | L | C | C |
|---|---|---|---|---|---|---|---|---|---|---|---|---|
| L, Total Lost Time per Cycle [s] | 5.40 | 5.40 | 5.40 | 5.40 | 5.40 | 5.40 | 5.10 | 5.10 | 5.10 | 5.10 | 5.10 | 5.10 |
| l1_p, Permitted Start-Up Lost Time [s] | 0.00 | 0.00 | 0.00 | 0.00 | 0.00 | 0.00 | 0.00 | 0.00 | 0.00 | 0.00 | 0.00 | 0.00 |
| l2, Clearance Lost Time [s] | 3.40 | 3.40 | 3.40 | 3.40 | 3.40 | 3.40 | 3.10 | 3.10 | 3.10 | 3.10 | 3.10 | 3.10 |
| g_i, Effective Green Time [s] | 1 | 9 | 9 | 1 | 9 | 9 | 2 | 4 | 4 | 3 | 6 | 6 |
| g / C, Green / Cycle | 0.02 | 0.23 | 0.23 | 0.03 | 0.24 | 0.24 | 0.04 | 0.11 | 0.11 | 0.08 | 0.15 | 0.15 |
| (v / s)_i Volume / Saturation Flow Rate | 0.01 | 0.06 | 0.06 | 0.01 | 0.16 | 0.16 | 0.02 | 0.05 | 0.05 | 0.05 | 0.05 | 0.06 |
| s, saturation flow rate [veh/h] | 1774 | 1863 | 1772 | 1774 | 1863 | 1779 | 1774 | 1863 | 1643 | 1774 | 1863 | 1790 |
| c, Capacity [veh/h] | 34 | 425 | 404 | 50 | 442 | 422 | 76 | 208 | 183 | 145 | 280 | 269 |
| d1, Uniform Delay [s] | 18.51 | 12.13 | 12.15 | 18.24 | 13.22 | 13.24 | 17.84 | 15.81 | 15.88 | 16.93 | 14.57 | 14.59 |
| k, delay calibration | 0.11 | 0.11 | 0.11 | 0.11 | 0.11 | 0.11 | 0.11 | 0.11 | 0.11 | 0.11 | 0.11 | 0.11 |
| I, Upstream Filtering Factor | 1.00 | 1.00 | 1.00 | 1.00 | 1.00 | 1.00 | 1.00 | 1.00 | 1.00 | 1.00 | 1.00 | 1.00 |
| d2, Incremental Delay [s] | 7.98 | 0.35 | 0.38 | 5.86 | 1.82 | 1.94 | 4.48 | 1.39 | 1.80 | 4.15 | 0.79 | 0.85 |
| d3, Initial Queue Delay [s] | 0.00 | 0.00 | 0.00 | 0.00 | 0.00 | 0.00 | 0.00 | 0.00 | 0.00 | 0.00 | 0.00 | 0.00 |
| Rp, platoon ratio | 1.00 | 1.00 | 1.00 | 1.00 | 1.00 | 1.00 | 1.00 | 1.00 | 1.00 | 1.00 | 1.00 | 1.00 |
| PF, progression factor | 1.00 | 1.00 | 1.00 | 1.00 | 1.00 | 1.00 | 1.00 | 1.00 | 1.00 | 1.00 | 1.00 | 1.00 |

**Lane Group Results**

| | | | | | | | | | | | | |
|---|---|---|---|---|---|---|---|---|---|---|---|---|
| X, volume / capacity | 0.42 | 0.27 | 0.28 | 0.44 | 0.68 | 0.68 | 0.47 | 0.43 | 0.46 | 0.61 | 0.36 | 0.37 |
| d, Delay for Lane Group [s/veh] | 26.49 | 12.48 | 12.53 | 24.10 | 15.05 | 15.18 | 22.31 | 17.20 | 17.67 | 21.08 | 15.36 | 15.44 |
| Lane Group LOS | C | B | B | C | B | B | C | B | B | C | B | B |
| Critical Lane Group | Yes | No | No | No | No | Yes | No | No | Yes | Yes | No | No |
| 50th-Percentile Queue Length [veh] | 0.17 | 0.64 | 0.63 | 0.24 | 1.91 | 1.85 | 0.35 | 0.66 | 0.65 | 0.78 | 0.69 | 0.68 |
| 50th-Percentile Queue Length [ft] | 4.34 | 15.97 | 15.71 | 5.90 | 47.72 | 46.23 | 8.80 | 16.60 | 16.22 | 19.61 | 17.36 | 17.11 |
| 95th-Percentile Queue Length [veh] | 0.31 | 1.15 | 1.13 | 0.43 | 3.44 | 3.33 | 0.63 | 1.19 | 1.17 | 1.41 | 1.25 | 1.23 |
| 95th-Percentile Queue Length [ft] | 7.82 | 28.75 | 28.28 | 10.63 | 85.90 | 83.21 | 15.84 | 29.87 | 29.20 | 35.30 | 31.25 | 30.79 |

**Movement, Approach, & Intersection Results**

| | | | | | | | | | | | | |
|---|---|---|---|---|---|---|---|---|---|---|---|---|
| d_M, Delay for Movement [s/veh] | 26.49 | 12.50 | 12.53 | 24.10 | 15.10 | 15.18 | 22.31 | 17.29 | 17.67 | 21.08 | 15.40 | 15.44 |
| Movement LOS | C | B | B | C | B | B | C | B | B | C | B | B |
| d_A, Approach Delay [s/veh] | 13.31 | | | 15.44 | | | 18.27 | | | 17.14 | | |
| Approach LOS | B | | | B | | | B | | | B | | |
| d_I, Intersection Delay [s/veh] | 15.86 | | | | | | | | | | | |
| Intersection LOS | B | | | | | | | | | | | |
| Intersection V/C | 0.468 | | | | | | | | | | | |

## Sequence

| | | | | | | | | | | | | | | | | |
|---|---|---|---|---|---|---|---|---|---|---|---|---|---|---|---|---|
| Ring 1 | 1 | 2 | 3 | 4 | - | - | - | - | - | - | - | - | - | - | - | - |
| Ring 2 | 5 | 6 | 7 | 8 | - | - | - | - | - | - | - | - | - | - | - | - |
| Ring 3 | - | - | - | - | - | - | - | - | - | - | - | - | - | - | - | - |
| Ring 4 | - | - | - | - | - | - | - | - | - | - | - | - | - | - | - | - |

**Intersection Level Of Service Report**
**Intersection 7: Alder Ave (NS) / Marygold Ave (EW)**

| | | | |
|---|---|---|---|
| Control Type: | All-way stop | Delay (sec / veh): | 13.8 |
| Analysis Method: | HCM 2010 | Level Of Service: | B |
| Analysis Period: | 15 minutes | | |

**Intersection Setup**

| Name | Alder Avenue | | | Alder Avenue | | | Marygold Avenue | | | Marygold Avenue | | |
|---|---|---|---|---|---|---|---|---|---|---|---|---|
| Approach | Northbound | | | Southbound | | | Eastbound | | | Westbound | | |
| Lane Configuration | | | | | | | | | | | | |
| Turning Movement | Left | Thru | Right | Left | Thru | Right | Left | Thru | Right | Left | Thru | Right |
| Lane Width [ft] | 12.00 | 12.00 | 12.00 | 12.00 | 12.00 | 12.00 | 12.00 | 12.00 | 12.00 | 12.00 | 12.00 | 12.00 |
| No. of Lanes in Pocket | 0 | 0 | 1 | 0 | 0 | 0 | 0 | 0 | 0 | 0 | 0 | 0 |
| Pocket Length [ft] | 100.00 | 100.00 | 200.00 | 100.00 | 100.00 | 100.00 | 100.00 | 100.00 | 100.00 | 100.00 | 100.00 | 100.00 |
| Speed [mph] | 40.00 | | | 40.00 | | | 35.00 | | | 25.00 | | |
| Grade [%] | 0.00 | | | 0.00 | | | 0.00 | | | 0.00 | | |
| Crosswalk | Yes | | | Yes | | | Yes | | | Yes | | |

**volumes**

| Name | Alder Avenue | | | Alder Avenue | | | Marygold Avenue | | | Marygold Avenue | | |
|---|---|---|---|---|---|---|---|---|---|---|---|---|
| Base Volume Input [veh/h] | 11 | 195 | 15 | 40 | 255 | 123 | 41 | 45 | 15 | 11 | 102 | 17 |
| Base Volume Adjustment Factor | 1.0000 | 1.0000 | 1.0000 | 1.0000 | 1.0000 | 1.0000 | 1.0000 | 1.0000 | 1.0000 | 1.0000 | 1.0000 | 1.0000 |
| Heavy Vehicles Percentage [%] | 2.00 | 2.00 | 2.00 | 2.00 | 2.00 | 2.00 | 2.00 | 2.00 | 2.00 | 2.00 | 2.00 | 2.00 |
| Growth Rate | 1.00 | 1.00 | 1.00 | 1.00 | 1.00 | 1.00 | 1.00 | 1.00 | 1.00 | 1.00 | 1.00 | 1.00 |
| In-Process Volume [veh/h] | 0 | 0 | 0 | 0 | 0 | 0 | 0 | 0 | 0 | 0 | 0 | 0 |
| Site-Generated Trips [veh/h] | 1 | 20 | 8 | 0 | 48 | 0 | 0 | 8 | 5 | 18 | 20 | 0 |
| Diverted Trips [veh/h] | 0 | 0 | 0 | 0 | 0 | 0 | 0 | 0 | 0 | 0 | 0 | 0 |
| Pass-by Trips [veh/h] | 0 | 0 | 0 | 0 | 0 | 0 | 0 | 0 | 0 | 0 | 0 | 0 |
| Existing Site Adjustment Volume [veh/h] | 0 | 0 | 0 | 0 | 0 | 0 | 0 | 0 | 0 | 0 | 0 | 0 |
| Other Volume [veh/h] | 0 | 0 | 0 | 0 | 0 | 0 | 0 | 0 | 0 | 0 | 0 | 0 |
| Total Hourly Volume [veh/h] | 12 | 215 | 23 | 40 | 303 | 123 | 41 | 53 | 20 | 29 | 122 | 17 |
| Peak Hour Factor | 0.9220 | 0.9220 | 0.9220 | 0.9220 | 0.9220 | 0.9220 | 0.9220 | 0.9220 | 0.9220 | 0.9220 | 0.9220 | 0.9220 |
| Other Adjustment Factor | 1.0000 | 1.0000 | 1.0000 | 1.0000 | 1.0000 | 1.0000 | 1.0000 | 1.0000 | 1.0000 | 1.0000 | 1.0000 | 1.0000 |
| Total 15-Minute Volume [veh/h] | 3 | 58 | 6 | 11 | 82 | 33 | 11 | 14 | 5 | 8 | 33 | 5 |
| Total Analysis Volume [veh/h] | 13 | 233 | 25 | 43 | 329 | 133 | 44 | 57 | 22 | 31 | 132 | 18 |
| Pedestrian Volume [ped/h] | 0 | | | 0 | | | 0 | | | 0 | | |

**Intersection Settings**

**Lanes**

**Movement, Approach, & Intersection Results**

| | | | | | | |
|---|---|---|---|---|---|---|
| 95th-Percentile Queue Length [veh] | 2.13 | 0.12 | 4.24 | 0.71 | 0.81 | 1.30 |
| 95th-Percentile Queue Length [ft] | 53.13 | 2.98 | 105.94 | 17.73 | 20.18 | 32.62 |
| Approach Delay [s/veh] | 13.05 | | 15.59 | | 10.98 | 11.85 |
| Approach LOS | B | | C | | B | B |
| Intersection Delay [s/veh] | 13.80 | | | | | |
| Intersection LOS | B | | | | | |

**Intersection Level Of Service Report**
**Intersection 8: Alder Ave (NS) / Valley Blvd (EW)**

| | | | |
|---|---|---|---|
| Control Type: | Signalized | Delay (sec / veh): | 30.8 |
| Analysis Method: | HCM 2010 | Level Of Service: | C |
| Analysis Period: | 15 minutes | Volume to Capacity (v/c): | 0.611 |

**Intersection Setup**

| Name | Alder Avenue | | | Alder Avenue | | | Valley Boulevard | | | | | |
|---|---|---|---|---|---|---|---|---|---|---|---|---|
| Approach | Northbound | | | Southbound | | | Eastbound | | | Westbound | | |
| Lane Configuration | | | | | | | | | | | | |
| Turning Movement | Left | Thru | Right | Left | Thru | Right | Left | Thru | Right | Left | Thru | Right |
| Lane Width [ft] | 12.00 | 12.00 | 12.00 | 12.00 | 12.00 | 12.00 | 12.00 | 12.00 | 12.00 | 12.00 | 12.00 | 12.00 |
| No. of Lanes in Pocket | 0 | 0 | 1 | 0 | 0 | 0 | 1 | 0 | 0 | 1 | 0 | 0 |
| Pocket Length [ft] | 100.00 | 100.00 | 55.00 | 100.00 | 100.00 | 100.00 | 100.00 | 100.00 | 100.00 | 100.00 | 100.00 | 100.00 |
| Speed [mph] | 40.00 | | | 40.00 | | | 40.00 | | | 30.00 | | |
| Grade [%] | 0.00 | | | 0.00 | | | 0.00 | | | 0.00 | | |
| Crosswalk | Yes | | | Yes | | | Yes | | | Yes | | |

**volumes**

| Name | Alder Avenue | | | Alder Avenue | | | Valley Boulevard | | | | | |
|---|---|---|---|---|---|---|---|---|---|---|---|---|
| Base Volume Input [veh/h] | 15 | 8 | 4 | 107 | 13 | 162 | 144 | 244 | 13 | 4 | 339 | 60 |
| Base Volume Adjustment Factor | 1.0000 | 1.0000 | 1.0000 | 1.0000 | 1.0000 | 1.0000 | 1.0000 | 1.0000 | 1.0000 | 1.0000 | 1.0000 | 1.0000 |
| Heavy Vehicles Percentage [%] | 2.00 | 2.00 | 2.00 | 2.00 | 2.00 | 2.00 | 4.00 | 4.00 | 4.00 | 4.00 | 4.00 | 4.00 |
| Growth Rate | 1.00 | 1.00 | 1.00 | 1.00 | 1.00 | 1.00 | 1.00 | 1.00 | 1.00 | 1.00 | 1.00 | 1.00 |
| In-Process Volume [veh/h] | 0 | 0 | 0 | 0 | 0 | 0 | 0 | 0 | 0 | 0 | 0 | 0 |
| Site-Generated Trips [veh/h] | 3 | 4 | 11 | 61 | 15 | 18 | 6 | 81 | 13 | 39 | 46 | 27 |
| Diverted Trips [veh/h] | 0 | 0 | 0 | 0 | 0 | 0 | 0 | 0 | 0 | 0 | 0 | 0 |
| Pass-by Trips [veh/h] | 0 | 0 | 0 | 0 | 0 | 0 | 0 | 0 | 0 | 0 | 0 | 0 |
| Existing Site Adjustment Volume [veh/h] | 0 | 0 | 0 | 0 | 0 | 0 | 0 | 0 | 0 | 0 | 0 | 0 |
| Other Volume [veh/h] | 0 | 0 | 0 | 0 | 0 | 0 | 0 | 0 | 0 | 0 | 0 | 0 |
| Right-Turn on Red Volume [veh/h] | 0 | 0 | 0 | 0 | 0 | 0 | 0 | 0 | 0 | 0 | 0 | 0 |
| Total Hourly Volume [veh/h] | 18 | 12 | 15 | 168 | 28 | 180 | 150 | 325 | 26 | 43 | 385 | 87 |
| Peak Hour Factor | 0.8890 | 0.8890 | 0.8890 | 0.8890 | 0.8890 | 0.8890 | 0.8890 | 0.8890 | 0.8890 | 0.8890 | 0.8890 | 0.8890 |
| Other Adjustment Factor | 1.0000 | 1.0000 | 1.0000 | 1.0000 | 1.0000 | 1.0000 | 1.0000 | 1.0000 | 1.0000 | 1.0000 | 1.0000 | 1.0000 |
| Total 15-Minute Volume [veh/h] | 5 | 3 | 4 | 47 | 8 | 51 | 42 | 91 | 7 | 12 | 108 | 24 |
| Total Analysis Volume [veh/h] | 20 | 13 | 17 | 189 | 31 | 202 | 169 | 366 | 29 | 48 | 433 | 98 |
| Presence of On-Street Parking | No | | No | No | | No | No | | No | No | | No |
| On-Street Parking Maneuver Rate [/h] | 0 | 0 | 0 | 0 | 0 | 0 | 0 | 0 | 0 | 0 | 0 | 0 |
| Local Bus Stopping Rate [/h] | 0 | 0 | 0 | 0 | 0 | 0 | 0 | 0 | 0 | 0 | 0 | 0 |
| Pedestrian Volume [ped/h] | 0 | | | 0 | | | 0 | | | 0 | | |
| Bicycle Volume [bicycles/h] | 0 | | | 0 | | | 0 | | | 0 | | |

**Intersection Settings**

| | |
|---|---|
| Located in CBD | No |
| Signal Coordination Group | 3 - EW - Valley |
| Cycle Length [s] | 120 |
| Coordination Type | Time of Day Pattern Coordinated |
| Actuation Type | Fully actuated |
| Offset [s] | 76.0 |
| Offset Reference | LagFO |
| Permissive Mode | SingleBand |
| Lost time [s] | 12.00 |

**Phasing & Timing**

| Control Type | Permiss | Permiss | Permiss | Permiss | Permiss | Permiss | Protecte | Permiss | Permiss | Protecte | Permiss | Permiss |
|---|---|---|---|---|---|---|---|---|---|---|---|---|
| Signal group | 0 | 2 | 0 | 0 | 6 | 0 | 3 | 8 | 0 | 7 | 4 | 0 |
| Auxiliary Signal Groups | | | | | | | | | | | | |
| Lead / Lag | - | - | - | - | - | - | Lead | - | - | Lead | - | - |
| Minimum Green [s] | 0 | 5 | 0 | 0 | 5 | 0 | 5 | 5 | 0 | 5 | 5 | 0 |
| Maximum Green [s] | 0 | 30 | 0 | 0 | 30 | 0 | 30 | 30 | 0 | 30 | 30 | 0 |
| Amber [s] | 0.0 | 4.4 | 0.0 | 0.0 | 4.4 | 0.0 | 4.4 | 4.4 | 0.0 | 3.7 | 3.7 | 0.0 |
| All red [s] | 0.0 | 1.0 | 0.0 | 0.0 | 1.0 | 0.0 | 1.0 | 1.0 | 0.0 | 1.0 | 1.0 | 0.0 |
| Split [s] | 0 | 56 | 0 | 0 | 56 | 0 | 23 | 53 | 0 | 11 | 41 | 0 |
| Vehicle Extension [s] | 0.0 | 3.0 | 0.0 | 0.0 | 3.0 | 0.0 | 3.0 | 3.0 | 0.0 | 3.0 | 3.0 | 0.0 |
| Walk [s] | 0 | 7 | 0 | 0 | 7 | 0 | 0 | 7 | 0 | 0 | 7 | 0 |
| Pedestrian Clearance [s] | 0 | 25 | 0 | 0 | 29 | 0 | 0 | 22 | 0 | 0 | 21 | 0 |
| I1, Start-Up Lost Time [s] | 0.0 | 2.0 | 0.0 | 0.0 | 2.0 | 0.0 | 2.0 | 2.0 | 0.0 | 2.0 | 2.0 | 0.0 |
| I2, Clearance Lost Time [s] | 0.0 | 3.4 | 0.0 | 0.0 | 3.4 | 0.0 | 3.4 | 3.4 | 0.0 | 2.7 | 2.7 | 0.0 |
| Minimum Recall | | No | | | No | | No | No | | No | No | |
| Maximum Recall | | No | | | No | | No | No | | No | No | |
| Pedestrian Recall | | No | | | No | | No | No | | No | No | |
| Detector Location [ft] | 0.0 | 0.0 | 0.0 | 0.0 | 0.0 | 0.0 | 0.0 | 0.0 | 0.0 | 0.0 | 0.0 | 0.0 |
| Detector Length [ft] | 0.0 | 0.0 | 0.0 | 0.0 | 0.0 | 0.0 | 0.0 | 0.0 | 0.0 | 0.0 | 0.0 | 0.0 |
| I, Upstream Filtering Factor | 1.00 | 1.00 | 1.00 | 1.00 | 1.00 | 1.00 | 1.00 | 1.00 | 1.00 | 1.00 | 1.00 | 1.00 |

**Exclusive Pedestrian Phase**

| | |
|---|---|
| Pedestrian Signal Group | 0 |
| Pedestrian Walk [s] | 0 |
| Pedestrian Clearance [s] | 0 |

**Lane Group Calculations**

| Lane Group | C | R | C | L | C | C | L | C | C |
|---|---|---|---|---|---|---|---|---|---|
| L, Total Lost Time per Cycle [s] | 5.40 | 5.40 | 5.40 | 5.40 | 5.40 | 5.40 | 4.70 | 4.70 | 4.70 |
| l1_p, Permitted Start-Up Lost Time [s] | 2.00 | 0.00 | 2.00 | 0.00 | 0.00 | 0.00 | 0.00 | 0.00 | 0.00 |
| l2, Clearance Lost Time [s] | 3.40 | 3.40 | 3.40 | 3.40 | 3.40 | 3.40 | 2.70 | 2.70 | 2.70 |
| g_i, Effective Green Time [s] | 39 | 39 | 39 | 14 | 62 | 62 | 4 | 52 | 52 |
| g / C, Green / Cycle | 0.32 | 0.32 | 0.32 | 0.11 | 0.51 | 0.51 | 0.04 | 0.44 | 0.44 |
| (v / s)_i Volume / Saturation Flow Rate | 0.03 | 0.01 | 0.30 | 0.10 | 0.11 | 0.11 | 0.03 | 0.15 | 0.15 |
| s, saturation flow rate [veh/h] | 1101 | 1583 | 1397 | 1740 | 1827 | 1780 | 1740 | 1827 | 1712 |
| c, Capacity [veh/h] | 402 | 508 | 492 | 197 | 940 | 916 | 62 | 797 | 747 |
| d1, Uniform Delay [s] | 28.16 | 27.95 | 41.08 | 49.96 | 9.91 | 9.92 | 56.70 | 16.10 | 16.13 |
| k, delay calibration | 0.11 | 0.11 | 0.24 | 0.11 | 0.50 | 0.50 | 0.11 | 0.50 | 0.50 |
| I, Upstream Filtering Factor | 1.00 | 1.00 | 1.00 | 1.00 | 1.00 | 1.00 | 1.00 | 1.00 | 1.00 |
| d2, Incremental Delay [s] | 0.09 | 0.03 | 9.32 | 10.13 | 0.52 | 0.53 | 18.71 | 1.17 | 1.27 |
| d3, Initial Queue Delay [s] | 0.00 | 0.00 | 0.00 | 0.00 | 0.00 | 0.00 | 0.00 | 0.00 | 0.00 |
| Rp, platoon ratio | 1.00 | 1.00 | 1.00 | 1.33 | 1.33 | 1.33 | 1.33 | 1.33 | 1.33 |
| PF, progression factor | 1.00 | 1.00 | 1.00 | 1.00 | 1.00 | 1.00 | 1.00 | 1.00 | 1.00 |

**Lane Group Results**

| | | | | | | | | | |
|---|---|---|---|---|---|---|---|---|---|
| X, volume / capacity | 0.08 | 0.03 | 0.86 | 0.86 | 0.21 | 0.21 | 0.78 | 0.34 | 0.35 |
| d, Delay for Lane Group [s/veh] | 28.25 | 27.98 | 50.41 | 60.09 | 10.43 | 10.45 | 75.41 | 17.27 | 17.40 |
| Lane Group LOS | C | C | D | E | B | B | E | B | B |
| Critical Lane Group | No | No | Yes | Yes | No | No | No | No | Yes |
| 50th-Percentile Queue Length [veh] | 0.66 | 0.34 | 13.04 | 5.23 | 1.92 | 1.88 | 1.75 | 3.88 | 3.70 |
| 50th-Percentile Queue Length [ft] | 16.44 | 8.38 | 326.03 | 130.77 | 48.02 | 47.11 | 43.67 | 96.99 | 92.40 |
| 95th-Percentile Queue Length [veh] | 1.18 | 0.60 | 18.96 | 8.98 | 3.46 | 3.39 | 3.14 | 6.98 | 6.65 |
| 95th-Percentile Queue Length [ft] | 29.60 | 15.09 | 474.09 | 224.55 | 86.43 | 84.79 | 78.61 | 174.58 | 166.32 |

**Movement, Approach, & Intersection Results**

| | | | | | | | | | | | | |
|---|---|---|---|---|---|---|---|---|---|---|---|---|
| d_M, Delay for Movement [s/veh] | 28.25 | 28.25 | 27.98 | 50.41 | 50.41 | 50.41 | 60.09 | 10.44 | 10.45 | 75.41 | 17.32 | 17.40 |
| Movement LOS | C | C | C | D | D | D | E | B | B | E | B | B |
| d_A, Approach Delay [s/veh] | 28.16 | | | 50.41 | | | 25.32 | | | 22.15 | | |
| Approach LOS | C | | | D | | | C | | | C | | |
| d_I, Intersection Delay [s/veh] | 30.83 | | | | | | | | | | | |
| Intersection LOS | C | | | | | | | | | | | |
| Intersection V/C | 0.611 | | | | | | | | | | | |

## Sequence

| | | | | | | | | | | | | | | | | |
|---|---|---|---|---|---|---|---|---|---|---|---|---|---|---|---|---|
| Ring 1 | 2 | 3 | 4 | - | - | - | - | - | - | - | - | - | - | - | - | - |
| Ring 2 | 6 | 7 | 8 | - | - | - | - | - | - | - | - | - | - | - | - | - |
| Ring 3 | - | - | - | - | - | - | - | - | - | - | - | - | - | - | - | - |
| Ring 4 | - | - | - | - | - | - | - | - | - | - | - | - | - | - | - | - |

**Intersection Level Of Service Report**
**Intersection 9: Locust Ave (NS) / Marygold Ave (EW)**

| | | | |
|---|---|---|---|
| Control Type: | All-way stop | Delay (sec / veh): | 9.6 |
| Analysis Method: | HCM 2010 | Level Of Service: | A |
| Analysis Period: | 15 minutes | | |

**Intersection Setup**

| Name | Locust Avenue | | | Locust Avenue | | | Marygold Avenue | | | | | |
|---|---|---|---|---|---|---|---|---|---|---|---|---|
| Approach | Northbound | | | Southbound | | | Eastbound | | | Westbound | | |
| Lane Configuration | | | | | | | | | | | | |
| Turning Movement | Left | Thru | Right | Left | Thru | Right | Left | Thru | Right | Left | Thru | Right |
| Lane Width [ft] | 12.00 | 12.00 | 12.00 | 12.00 | 12.00 | 12.00 | 12.00 | 12.00 | 12.00 | 12.00 | 12.00 | 12.00 |
| No. of Lanes in Pocket | 0 | 0 | 1 | 0 | 0 | 1 | 0 | 0 | 0 | 0 | 0 | 0 |
| Pocket Length [ft] | 100.00 | 100.00 | 100.00 | 100.00 | 100.00 | 325.00 | 100.00 | 100.00 | 100.00 | 100.00 | 100.00 | 100.00 |
| Speed [mph] | 30.00 | | | 40.00 | | | 30.00 | | | 30.00 | | |
| Grade [%] | 0.00 | | | 0.00 | | | 0.00 | | | 0.00 | | |
| Crosswalk | Yes | | | Yes | | | Yes | | | Yes | | |

**volumes**

| Name | Locust Avenue | | | Locust Avenue | | | Marygold Avenue | | | | | |
|---|---|---|---|---|---|---|---|---|---|---|---|---|
| Base Volume Input [veh/h] | 13 | 96 | 11 | 14 | 153 | 47 | 16 | 68 | 19 | 5 | 51 | 5 |
| Base Volume Adjustment Factor | 1.0000 | 1.0000 | 1.0000 | 1.0000 | 1.0000 | 1.0000 | 1.0000 | 1.0000 | 1.0000 | 1.0000 | 1.0000 | 1.0000 |
| Heavy Vehicles Percentage [%] | 2.00 | 2.00 | 2.00 | 2.00 | 2.00 | 2.00 | 2.00 | 2.00 | 2.00 | 2.00 | 2.00 | 2.00 |
| Growth Rate | 1.00 | 1.00 | 1.00 | 1.00 | 1.00 | 1.00 | 1.00 | 1.00 | 1.00 | 1.00 | 1.00 | 1.00 |
| In-Process Volume [veh/h] | 0 | 0 | 0 | 0 | 0 | 0 | 0 | 0 | 0 | 0 | 0 | 0 |
| Site-Generated Trips [veh/h] | 25 | 5 | 7 | 0 | 11 | 0 | 0 | 4 | 75 | 15 | 8 | 0 |
| Diverted Trips [veh/h] | 0 | 0 | 0 | 0 | 0 | 0 | 0 | 0 | 0 | 0 | 0 | 0 |
| Pass-by Trips [veh/h] | 0 | 0 | 0 | 0 | 0 | 0 | 0 | 0 | 0 | 0 | 0 | 0 |
| Existing Site Adjustment Volume [veh/h] | 0 | 0 | 0 | 0 | 0 | 0 | 0 | 0 | 0 | 0 | 0 | 0 |
| Other Volume [veh/h] | 0 | 0 | 0 | 0 | 0 | 0 | 0 | 0 | 0 | 0 | 0 | 0 |
| Total Hourly Volume [veh/h] | 38 | 101 | 18 | 14 | 164 | 47 | 16 | 72 | 94 | 20 | 59 | 5 |
| Peak Hour Factor | 0.9500 | 0.9500 | 0.9500 | 0.9500 | 0.9500 | 0.9500 | 0.9500 | 0.9500 | 0.9500 | 0.9500 | 0.9500 | 0.9500 |
| Other Adjustment Factor | 1.0000 | 1.0000 | 1.0000 | 1.0000 | 1.0000 | 1.0000 | 1.0000 | 1.0000 | 1.0000 | 1.0000 | 1.0000 | 1.0000 |
| Total 15-Minute Volume [veh/h] | 10 | 27 | 5 | 4 | 43 | 12 | 4 | 19 | 25 | 5 | 16 | 1 |
| Total Analysis Volume [veh/h] | 40 | 106 | 19 | 15 | 173 | 49 | 17 | 76 | 99 | 21 | 62 | 5 |
| Pedestrian Volume [ped/h] | 0 | | | 0 | | | 0 | | | 0 | | |

**Intersection Settings**

**Lanes**

**Movement, Approach, & Intersection Results**

| | | | | | | |
|---|---|---|---|---|---|---|
| 95th-Percentile Queue Length [veh] | 0.88 | 0.08 | 1.19 | 0.21 | 1.01 | 0.44 |
| 95th-Percentile Queue Length [ft] | 22.10 | 1.96 | 29.63 | 5.18 | 25.37 | 10.96 |
| Approach Delay [s/veh] | 9.79 | | 9.86 | | 9.43 | 9.01 |
| Approach LOS | A | | A | | A | A |
| Intersection Delay [s/veh] | 9.61 | | | | | |
| Intersection LOS | A | | | | | |

**Intersection Level Of Service Report**
**Intersection 10: Locust Ave (NS) / Valley Blvd (EW)**

| | | | |
|---|---|---|---|
| Control Type: | Signalized | Delay (sec / veh): | 23.0 |
| Analysis Method: | HCM 2010 | Level Of Service: | C |
| Analysis Period: | 15 minutes | Volume to Capacity (v/c): | 0.525 |

**Intersection Setup**

| Name | Locust Avenue | | | Locust Avenue | | | Valley Boulevard | | | Valley Boulevard | | |
|---|---|---|---|---|---|---|---|---|---|---|---|---|
| Approach | Northbound | | | Southbound | | | Eastbound | | | Westbound | | |
| Lane Configuration | | | | | | | | | | | | |
| Turning Movement | Left | Thru | Right | Left | Thru | Right | Left | Thru | Right | Left | Thru | Right |
| Lane Width [ft] | 12.00 | 12.00 | 12.00 | 12.00 | 12.00 | 12.00 | 12.00 | 12.00 | 12.00 | 12.00 | 12.00 | 12.00 |
| No. of Lanes in Pocket | 0 | 0 | 0 | 0 | 0 | 0 | 1 | 0 | 0 | 1 | 0 | 0 |
| Pocket Length [ft] | 100.00 | 100.00 | 100.00 | 100.00 | 100.00 | 100.00 | 100.00 | 100.00 | 100.00 | 200.00 | 100.00 | 100.00 |
| Speed [mph] | 30.00 | | | 40.00 | | | 45.00 | | | 45.00 | | |
| Grade [%] | 0.00 | | | 0.00 | | | 0.00 | | | 0.00 | | |
| Crosswalk | Yes | | | Yes | | | No | | | Yes | | |

**volumes**

| Name | Locust Avenue | | | Locust Avenue | | | Valley Boulevard | | | Valley Boulevard | | |
|---|---|---|---|---|---|---|---|---|---|---|---|---|
| Base Volume Input [veh/h] | 1 | 5 | 16 | 87 | 5 | 78 | 41 | 274 | 3 | 48 | 385 | 58 |
| Base Volume Adjustment Factor | 1.0000 | 1.0000 | 1.0000 | 1.0000 | 1.0000 | 1.0000 | 1.0000 | 1.0000 | 1.0000 | 1.0000 | 1.0000 | 1.0000 |
| Heavy Vehicles Percentage [%] | 2.00 | 2.00 | 2.00 | 2.00 | 2.00 | 2.00 | 4.00 | 4.00 | 4.00 | 4.00 | 4.00 | 4.00 |
| Growth Rate | 1.00 | 1.00 | 1.00 | 1.00 | 1.00 | 1.00 | 1.00 | 1.00 | 1.00 | 1.00 | 1.00 | 1.00 |
| In-Process Volume [veh/h] | 0 | 0 | 0 | 0 | 0 | 0 | 0 | 0 | 0 | 0 | 0 | 0 |
| Site-Generated Trips [veh/h] | 0 | 1 | 13 | 101 | 8 | 21 | 10 | 198 | 0 | 53 | 173 | 37 |
| Diverted Trips [veh/h] | 0 | 0 | 0 | 0 | 0 | 0 | 0 | 0 | 0 | 0 | 0 | 0 |
| Pass-by Trips [veh/h] | 0 | 0 | 0 | 0 | 0 | 0 | 0 | 0 | 0 | 0 | 0 | 0 |
| Existing Site Adjustment Volume [veh/h] | 0 | 0 | 0 | 0 | 0 | 0 | 0 | 0 | 0 | 0 | 0 | 0 |
| Other Volume [veh/h] | 0 | 0 | 0 | 0 | 0 | 0 | 0 | 0 | 0 | 0 | 0 | 0 |
| Right-Turn on Red Volume [veh/h] | 0 | 0 | 0 | 0 | 0 | 0 | 0 | 0 | 0 | 0 | 0 | 0 |
| Total Hourly Volume [veh/h] | 1 | 6 | 29 | 188 | 13 | 99 | 51 | 472 | 3 | 101 | 558 | 95 |
| Peak Hour Factor | 0.9100 | 0.9100 | 0.9100 | 0.9100 | 0.9100 | 0.9100 | 0.9100 | 0.9100 | 0.9100 | 0.9100 | 0.9100 | 0.9100 |
| Other Adjustment Factor | 1.0000 | 1.0000 | 1.0000 | 1.0000 | 1.0000 | 1.0000 | 1.0000 | 1.0000 | 1.0000 | 1.0000 | 1.0000 | 1.0000 |
| Total 15-Minute Volume [veh/h] | 0 | 2 | 8 | 52 | 4 | 27 | 14 | 130 | 1 | 28 | 153 | 26 |
| Total Analysis Volume [veh/h] | 1 | 7 | 32 | 207 | 14 | 109 | 56 | 519 | 3 | 111 | 613 | 104 |
| Presence of On-Street Parking | No | | No | No | | No | No | | No | No | | No |
| On-Street Parking Maneuver Rate [/h] | 0 | 0 | 0 | 0 | 0 | 0 | 0 | 0 | 0 | 0 | 0 | 0 |
| Local Bus Stopping Rate [/h] | 0 | 0 | 0 | 0 | 0 | 0 | 0 | 0 | 0 | 0 | 0 | 0 |
| Pedestrian Volume [ped/h] | 0 | | | 0 | | | 0 | | | 0 | | |
| Bicycle Volume [bicycles/h] | 0 | | | 0 | | | 0 | | | 0 | | |

**Intersection Settings**

| | |
|---|---|
| Located in CBD | No |
| Signal Coordination Group | 3 - EW - Valley |
| Cycle Length [s] | 120 |
| Coordination Type | Time of Day Pattern Coordinated |
| Actuation Type | Fully actuated |
| Offset [s] | 26.0 |
| Offset Reference | LagFO |
| Permissive Mode | SingleBand |
| Lost time [s] | 12.00 |

**Phasing & Timing**

| Control Type | Permiss | Permiss | Permiss | Permiss | Permiss | Permiss | Protecte | Permiss | Permiss | Protecte | Permiss | Permiss |
|---|---|---|---|---|---|---|---|---|---|---|---|---|
| Signal group | 0 | 2 | 0 | 0 | 6 | 0 | 3 | 8 | 0 | 7 | 4 | 0 |
| Auxiliary Signal Groups | | | | | | | | | | | | |
| Lead / Lag | - | - | - | - | - | - | Lead | - | - | Lead | - | - |
| Minimum Green [s] | 0 | 5 | 0 | 0 | 5 | 0 | 5 | 5 | 0 | 5 | 5 | 0 |
| Maximum Green [s] | 0 | 30 | 0 | 0 | 30 | 0 | 30 | 30 | 0 | 30 | 30 | 0 |
| Amber [s] | 0.0 | 3.7 | 0.0 | 0.0 | 4.4 | 0.0 | 4.8 | 4.8 | 0.0 | 4.8 | 4.8 | 0.0 |
| All red [s] | 0.0 | 1.0 | 0.0 | 0.0 | 1.0 | 0.0 | 1.0 | 1.0 | 0.0 | 1.0 | 1.0 | 0.0 |
| Split [s] | 0 | 50 | 0 | 0 | 50 | 0 | 13 | 51 | 0 | 19 | 57 | 0 |
| Vehicle Extension [s] | 0.0 | 3.0 | 0.0 | 0.0 | 3.0 | 0.0 | 3.0 | 3.0 | 0.0 | 3.0 | 3.0 | 0.0 |
| Walk [s] | 0 | 7 | 0 | 0 | 7 | 0 | 0 | 7 | 0 | 0 | 7 | 0 |
| Pedestrian Clearance [s] | 0 | 26 | 0 | 0 | 10 | 0 | 0 | 16 | 0 | 0 | 19 | 0 |
| I1, Start-Up Lost Time [s] | 0.0 | 2.0 | 0.0 | 0.0 | 2.0 | 0.0 | 2.0 | 2.0 | 0.0 | 2.0 | 2.0 | 0.0 |
| I2, Clearance Lost Time [s] | 0.0 | 2.7 | 0.0 | 0.0 | 3.4 | 0.0 | 3.8 | 3.8 | 0.0 | 3.8 | 3.8 | 0.0 |
| Minimum Recall | | No | | | No | | No | No | | No | No | |
| Maximum Recall | | No | | | No | | No | No | | No | No | |
| Pedestrian Recall | | No | | | No | | No | No | | No | No | |
| Detector Location [ft] | 0.0 | 0.0 | 0.0 | 0.0 | 0.0 | 0.0 | 0.0 | 0.0 | 0.0 | 0.0 | 0.0 | 0.0 |
| Detector Length [ft] | 0.0 | 0.0 | 0.0 | 0.0 | 0.0 | 0.0 | 0.0 | 0.0 | 0.0 | 0.0 | 0.0 | 0.0 |
| I, Upstream Filtering Factor | 1.00 | 1.00 | 1.00 | 1.00 | 1.00 | 1.00 | 1.00 | 1.00 | 1.00 | 1.00 | 1.00 | 1.00 |

**Exclusive Pedestrian Phase**

| | |
|---|---|
| Pedestrian Signal Group | 0 |
| Pedestrian Walk [s] | 0 |
| Pedestrian Clearance [s] | 0 |

**Lane Group Calculations**

| Lane Group | C | C | L | C | C | L | C | C |
|---|---|---|---|---|---|---|---|---|
| L, Total Lost Time per Cycle [s] | 4.70 | 5.40 | 5.80 | 5.80 | 5.80 | 5.80 | 5.80 | 5.80 |
| l1_p, Permitted Start-Up Lost Time [s] | 2.00 | 2.00 | 0.00 | 0.00 | 0.00 | 0.00 | 0.00 | 0.00 |
| l2, Clearance Lost Time [s] | 0.00 | 3.40 | 3.80 | 3.80 | 3.80 | 3.80 | 3.80 | 3.80 |
| g_i, Effective Green Time [s] | 31 | 31 | 5 | 63 | 63 | 9 | 67 | 67 |
| g / C, Green / Cycle | 0.26 | 0.26 | 0.04 | 0.52 | 0.52 | 0.08 | 0.56 | 0.56 |
| (v / s)_i Volume / Saturation Flow Rate | 0.02 | 0.24 | 0.03 | 0.14 | 0.14 | 0.06 | 0.20 | 0.20 |
| s, saturation flow rate [veh/h] | 1664 | 1384 | 1740 | 1827 | 1823 | 1740 | 1827 | 1736 |
| c, Capacity [veh/h] | 439 | 403 | 74 | 956 | 954 | 138 | 1022 | 971 |
| d1, Uniform Delay [s] | 33.49 | 44.20 | 55.94 | 9.62 | 9.62 | 52.72 | 7.76 | 7.76 |
| k, delay calibration | 0.11 | 0.18 | 0.11 | 0.50 | 0.50 | 0.11 | 0.50 | 0.50 |
| I, Upstream Filtering Factor | 1.00 | 1.00 | 1.00 | 1.00 | 1.00 | 1.00 | 1.00 | 1.00 |
| d2, Incremental Delay [s] | 0.09 | 6.82 | 14.42 | 0.71 | 0.71 | 10.48 | 0.98 | 1.04 |
| d3, Initial Queue Delay [s] | 0.00 | 0.00 | 0.00 | 0.00 | 0.00 | 0.00 | 0.00 | 0.00 |
| Rp, platoon ratio | 1.00 | 1.00 | 1.33 | 1.33 | 1.33 | 1.33 | 1.33 | 1.33 |
| PF, progression factor | 1.00 | 1.00 | 1.00 | 1.00 | 1.00 | 1.00 | 1.00 | 1.00 |

**Lane Group Results**

| | | | | | | | | |
|---|---|---|---|---|---|---|---|---|
| X, volume / capacity | 0.09 | 0.82 | 0.76 | 0.27 | 0.27 | 0.81 | 0.36 | 0.36 |
| d, Delay for Lane Group [s/veh] | 33.58 | 51.02 | 70.35 | 10.33 | 10.33 | 63.20 | 8.74 | 8.80 |
| Lane Group LOS | C | D | E | B | B | E | A | A |
| Critical Lane Group | No | Yes | Yes | No | No | No | No | Yes |
| 50th-Percentile Queue Length [veh] | 0.90 | 10.09 | 1.91 | 2.43 | 2.43 | 3.52 | 2.93 | 2.81 |
| 50th-Percentile Queue Length [ft] | 22.52 | 252.20 | 47.81 | 60.84 | 60.75 | 87.99 | 73.36 | 70.14 |
| 95th-Percentile Queue Length [veh] | 1.62 | 15.30 | 3.44 | 4.38 | 4.37 | 6.34 | 5.28 | 5.05 |
| 95th-Percentile Queue Length [ft] | 40.53 | 382.43 | 86.07 | 109.51 | 109.35 | 158.38 | 132.05 | 126.25 |

**Movement, Approach, & Intersection Results**

| | | | | | | | | | | | | |
|---|---|---|---|---|---|---|---|---|---|---|---|---|
| d_M, Delay for Movement [s/veh] | 33.58 | 33.58 | 33.58 | 51.02 | 51.02 | 51.02 | 70.35 | 10.33 | 10.33 | 63.20 | 8.77 | 8.80 |
| Movement LOS | C | C | C | D | D | D | E | B | B | E | A | A |
| d_A, Approach Delay [s/veh] | 33.58 | | | 51.02 | | | 16.14 | | | 16.07 | | |
| Approach LOS | C | | | D | | | B | | | B | | |
| d_I, Intersection Delay [s/veh] | 22.98 | | | | | | | | | | | |
| Intersection LOS | C | | | | | | | | | | | |
| Intersection V/C | 0.525 | | | | | | | | | | | |

## Sequence

| | | | | | | | | | | | | | | | | |
|---|---|---|---|---|---|---|---|---|---|---|---|---|---|---|---|---|
| Ring 1 | 2 | 3 | 4 | - | - | - | - | - | - | - | - | - | - | - | - | - |
| Ring 2 | 6 | 7 | 8 | - | - | - | - | - | - | - | - | - | - | - | - | - |
| Ring 3 | - | - | - | - | - | - | - | - | - | - | - | - | - | - | - | - |
| Ring 4 | - | - | - | - | - | - | - | - | - | - | - | - | - | - | - | - |

**Intersection Level Of Service Report**
**Intersection 11: Cedar Ave (NS) / San Bernardino Ave (EW)**

| | | | |
|---|---|---|---|
| Control Type: | Signalized | Delay (sec / veh): | 18.7 |
| Analysis Method: | HCM 2010 | Level Of Service: | B |
| Analysis Period: | 15 minutes | Volume to Capacity (v/c): | 0.492 |

**Intersection Setup**

| Name | Cedar Avenue | | | Cedar Avenue | | | | | | San Bernardino Avenue | | |
|---|---|---|---|---|---|---|---|---|---|---|---|---|
| Approach | Northbound | | | Southbound | | | Eastbound | | | Westbound | | |
| Lane Configuration | | | | | | | | | | | | |
| Turning Movement | Left | Thru | Right | Left | Thru | Right | Left | Thru | Right | Left | Thru | Right |
| Lane Width [ft] | 12.00 | 12.00 | 12.00 | 12.00 | 12.00 | 12.00 | 12.00 | 12.00 | 12.00 | 12.00 | 12.00 | 12.00 |
| No. of Lanes in Pocket | 1 | 0 | 0 | 1 | 0 | 0 | 1 | 0 | 1 | 1 | 0 | 0 |
| Pocket Length [ft] | 125.00 | 100.00 | 100.00 | 125.00 | 100.00 | 100.00 | 100.00 | 100.00 | 100.00 | 100.00 | 100.00 | 100.00 |
| Speed [mph] | 40.00 | | | 40.00 | | | 30.00 | | | 40.00 | | |
| Grade [%] | 0.00 | | | 0.00 | | | 0.00 | | | 0.00 | | |
| Crosswalk | Yes | | | Yes | | | Yes | | | Yes | | |

**volumes**

| Name | Cedar Avenue | | | Cedar Avenue | | | | | | San Bernardino Avenue | | |
|---|---|---|---|---|---|---|---|---|---|---|---|---|
| Base Volume Input [veh/h] | 55 | 664 | 38 | 94 | 875 | 39 | 18 | 110 | 29 | 52 | 112 | 54 |
| Base Volume Adjustment Factor | 1.0000 | 1.0000 | 1.0000 | 1.0000 | 1.0000 | 1.0000 | 1.0000 | 1.0000 | 1.0000 | 1.0000 | 1.0000 | 1.0000 |
| Heavy Vehicles Percentage [%] | 4.00 | 4.00 | 4.00 | 4.00 | 4.00 | 4.00 | 2.00 | 2.00 | 2.00 | 2.00 | 2.00 | 2.00 |
| Growth Rate | 1.00 | 1.00 | 1.00 | 1.00 | 1.00 | 1.00 | 1.00 | 1.00 | 1.00 | 1.00 | 1.00 | 1.00 |
| In-Process Volume [veh/h] | 0 | 0 | 0 | 0 | 0 | 0 | 0 | 0 | 0 | 0 | 0 | 0 |
| Site-Generated Trips [veh/h] | 0 | 13 | 0 | 0 | 21 | 2 | 4 | 0 | -1 | 0 | 0 | 0 |
| Diverted Trips [veh/h] | 0 | 0 | 0 | 0 | 0 | 0 | 0 | 0 | 0 | 0 | 0 | 0 |
| Pass-by Trips [veh/h] | 0 | 0 | 0 | 0 | 0 | 0 | 0 | 0 | 0 | 0 | 0 | 0 |
| Existing Site Adjustment Volume [veh/h] | 0 | 0 | 0 | 0 | 0 | 0 | 0 | 0 | 0 | 0 | 0 | 0 |
| Other Volume [veh/h] | 0 | 0 | 0 | 0 | 0 | 0 | 0 | 0 | 0 | 0 | 0 | 0 |
| Right-Turn on Red Volume [veh/h] | 0 | 0 | 0 | 0 | 0 | 0 | 0 | 0 | 0 | 0 | 0 | 0 |
| Total Hourly Volume [veh/h] | 55 | 677 | 38 | 94 | 896 | 41 | 22 | 110 | 28 | 52 | 112 | 54 |
| Peak Hour Factor | 0.8870 | 0.8870 | 0.8870 | 0.8870 | 0.8870 | 0.8870 | 0.8870 | 0.8870 | 0.8870 | 0.8870 | 0.8870 | 0.8870 |
| Other Adjustment Factor | 1.0000 | 1.0000 | 1.0000 | 1.0000 | 1.0000 | 1.0000 | 1.0000 | 1.0000 | 1.0000 | 1.0000 | 1.0000 | 1.0000 |
| Total 15-Minute Volume [veh/h] | 16 | 191 | 11 | 26 | 253 | 12 | 6 | 31 | 8 | 15 | 32 | 15 |
| Total Analysis Volume [veh/h] | 62 | 763 | 43 | 106 | 1010 | 46 | 25 | 124 | 32 | 59 | 126 | 61 |
| Presence of On-Street Parking | No | | No | No | | No | No | | No | No | | No |
| On-Street Parking Maneuver Rate [/h] | 0 | 0 | 0 | 0 | 0 | 0 | 0 | 0 | 0 | 0 | 0 | 0 |
| Local Bus Stopping Rate [/h] | 0 | 0 | 0 | 0 | 0 | 0 | 0 | 0 | 0 | 0 | 0 | 0 |
| Pedestrian Volume [ped/h] | 0 | | | 0 | | | 0 | | | 0 | | |
| Bicycle Volume [bicycles/h] | 0 | | | 0 | | | 0 | | | 0 | | |

**Intersection Settings**

| | |
|---|---|
| Located in CBD | No |
| Signal Coordination Group | 2 - NS - Cedar |
| Cycle Length [s] | 120 |
| Coordination Type | Time of Day Pattern Coordinated |
| Actuation Type | Fully actuated |
| Offset [s] | 0.0 |
| Offset Reference | LagFO |
| Permissive Mode | SingleBand |
| Lost time [s] | 16.00 |

**Phasing & Timing**

| Control Type | Protecte | Permiss | Permiss | Protecte | Permiss | Permiss | Protecte | Permiss | Permiss | Protecte | Permiss | Permiss |
|---|---|---|---|---|---|---|---|---|---|---|---|---|
| Signal group | 5 | 2 | 0 | 1 | 6 | 0 | 3 | 8 | 0 | 7 | 4 | 0 |
| Auxiliary Signal Groups | | | | | | | | | | | | |
| Lead / Lag | Lead | - | - | Lead | - | - | Lead | - | - | Lead | - | - |
| Minimum Green [s] | 5 | 5 | 0 | 5 | 5 | 0 | 5 | 5 | 0 | 5 | 5 | 0 |
| Maximum Green [s] | 30 | 30 | 0 | 30 | 30 | 0 | 30 | 30 | 0 | 30 | 30 | 0 |
| Amber [s] | 4.4 | 4.4 | 0.0 | 4.4 | 4.4 | 0.0 | 3.7 | 3.7 | 0.0 | 4.4 | 4.4 | 0.0 |
| All red [s] | 1.0 | 1.0 | 0.0 | 1.0 | 1.0 | 0.0 | 1.0 | 1.0 | 0.0 | 1.0 | 1.0 | 0.0 |
| Split [s] | 11 | 53 | 0 | 15 | 57 | 0 | 10 | 41 | 0 | 11 | 42 | 0 |
| Vehicle Extension [s] | 3.0 | 3.0 | 0.0 | 3.0 | 3.0 | 0.0 | 3.0 | 3.0 | 0.0 | 3.0 | 3.0 | 0.0 |
| Walk [s] | 0 | 7 | 0 | 0 | 7 | 0 | 0 | 7 | 0 | 0 | 7 | 0 |
| Pedestrian Clearance [s] | 0 | 24 | 0 | 0 | 24 | 0 | 0 | 29 | 0 | 0 | 29 | 0 |
| I1, Start-Up Lost Time [s] | 2.0 | 2.0 | 0.0 | 2.0 | 2.0 | 0.0 | 2.0 | 2.0 | 0.0 | 2.0 | 2.0 | 0.0 |
| I2, Clearance Lost Time [s] | 3.4 | 3.4 | 0.0 | 3.4 | 3.4 | 0.0 | 2.7 | 2.7 | 0.0 | 3.4 | 3.4 | 0.0 |
| Minimum Recall | No | No | | No | No | | No | No | | No | No | |
| Maximum Recall | No | No | | No | No | | No | No | | No | No | |
| Pedestrian Recall | No | No | | No | No | | No | No | | No | No | |
| Detector Location [ft] | 0.0 | 0.0 | 0.0 | 0.0 | 0.0 | 0.0 | 0.0 | 0.0 | 0.0 | 0.0 | 0.0 | 0.0 |
| Detector Length [ft] | 0.0 | 0.0 | 0.0 | 0.0 | 0.0 | 0.0 | 0.0 | 0.0 | 0.0 | 0.0 | 0.0 | 0.0 |
| I, Upstream Filtering Factor | 1.00 | 1.00 | 1.00 | 1.00 | 1.00 | 1.00 | 1.00 | 1.00 | 1.00 | 1.00 | 1.00 | 1.00 |

**Exclusive Pedestrian Phase**

| | |
|---|---|
| Pedestrian Signal Group | 0 |
| Pedestrian Walk [s] | 0 |
| Pedestrian Clearance [s] | 0 |

**Lane Group Calculations**

| Lane Group | L | C | C | L | C | C | L | C | R | L | C | C |
|---|---|---|---|---|---|---|---|---|---|---|---|---|
| L, Total Lost Time per Cycle [s] | 5.40 | 5.40 | 5.40 | 5.40 | 5.40 | 5.40 | 4.70 | 4.70 | 4.70 | 5.40 | 5.40 | 5.40 |
| l1_p, Permitted Start-Up Lost Time [s] | 0.00 | 0.00 | 0.00 | 0.00 | 0.00 | 0.00 | 0.00 | 0.00 | 0.00 | 0.00 | 0.00 | 0.00 |
| l2, Clearance Lost Time [s] | 3.40 | 3.40 | 3.40 | 3.40 | 3.40 | 3.40 | 2.70 | 2.70 | 2.70 | 3.40 | 3.40 | 3.40 |
| g_i, Effective Green Time [s] | 5 | 75 | 75 | 9 | 78 | 78 | 3 | 10 | 10 | 5 | 12 | 12 |
| g / C, Green / Cycle | 0.05 | 0.62 | 0.62 | 0.07 | 0.65 | 0.65 | 0.02 | 0.08 | 0.08 | 0.04 | 0.10 | 0.10 |
| (v / s)_i Volume / Saturation Flow Rate | 0.04 | 0.22 | 0.22 | 0.06 | 0.29 | 0.29 | 0.01 | 0.07 | 0.02 | 0.03 | 0.05 | 0.05 |
| s, saturation flow rate [veh/h] | 1740 | 1827 | 1793 | 1740 | 1827 | 1799 | 1774 | 1863 | 1583 | 1774 | 1863 | 1666 |
| c, Capacity [veh/h] | 80 | 1138 | 1117 | 130 | 1191 | 1172 | 43 | 158 | 134 | 77 | 193 | 173 |
| d1, Uniform Delay [s] | 55.74 | 4.38 | 4.38 | 53.23 | 3.23 | 3.23 | 57.95 | 53.88 | 51.33 | 56.82 | 50.85 | 51.02 |
| k, delay calibration | 0.11 | 0.50 | 0.50 | 0.16 | 0.50 | 0.50 | 0.11 | 0.11 | 0.11 | 0.11 | 0.11 | 0.11 |
| I, Upstream Filtering Factor | 1.00 | 1.00 | 1.00 | 1.00 | 1.00 | 1.00 | 1.00 | 1.00 | 1.00 | 1.00 | 1.00 | 1.00 |
| d2, Incremental Delay [s] | 14.59 | 0.88 | 0.89 | 15.99 | 1.21 | 1.23 | 11.44 | 8.31 | 0.91 | 14.44 | 1.97 | 2.48 |
| d3, Initial Queue Delay [s] | 0.00 | 0.00 | 0.00 | 0.00 | 0.00 | 0.00 | 0.00 | 0.00 | 0.00 | 0.00 | 0.00 | 0.00 |
| Rp, platoon ratio | 1.33 | 1.33 | 1.33 | 1.33 | 1.33 | 1.33 | 1.00 | 1.00 | 1.00 | 1.00 | 1.00 | 1.00 |
| PF, progression factor | 1.00 | 1.00 | 1.00 | 1.00 | 1.00 | 1.00 | 1.00 | 1.00 | 1.00 | 1.00 | 1.00 | 1.00 |

**Lane Group Results**

| | | | | | | | | | | | | |
|---|---|---|---|---|---|---|---|---|---|---|---|---|
| X, volume / capacity | 0.77 | 0.36 | 0.36 | 0.81 | 0.45 | 0.45 | 0.58 | 0.79 | 0.24 | 0.76 | 0.50 | 0.53 |
| d, Delay for Lane Group [s/veh] | 70.34 | 5.26 | 5.28 | 69.23 | 4.45 | 4.47 | 69.39 | 62.19 | 52.24 | 71.27 | 52.82 | 53.51 |
| Lane Group LOS | E | A | A | E | A | A | E | E | D | E | D | D |
| Critical Lane Group | Yes | No | No | No | No | Yes | No | Yes | No | Yes | No | No |
| 50th-Percentile Queue Length [veh] | 2.13 | 2.14 | 2.10 | 3.60 | 2.24 | 2.21 | 0.89 | 4.04 | 0.94 | 2.05 | 2.79 | 2.68 |
| 50th-Percentile Queue Length [ft] | 53.14 | 53.42 | 52.57 | 89.91 | 55.97 | 55.31 | 22.25 | 100.92 | 23.41 | 51.33 | 69.74 | 66.97 |
| 95th-Percentile Queue Length [veh] | 3.83 | 3.85 | 3.79 | 6.47 | 4.03 | 3.98 | 1.60 | 7.27 | 1.69 | 3.70 | 5.02 | 4.82 |
| 95th-Percentile Queue Length [ft] | 95.65 | 96.16 | 94.63 | 161.84 | 100.75 | 99.56 | 40.06 | 181.65 | 42.15 | 92.39 | 125.54 | 120.55 |

**Movement, Approach, & Intersection Results**

| | | | | | | | | | | | | |
|---|---|---|---|---|---|---|---|---|---|---|---|---|
| d_M, Delay for Movement [s/veh] | 70.34 | 5.27 | 5.28 | 69.23 | 4.45 | 4.47 | 69.39 | 62.19 | 52.24 | 71.27 | 52.98 | 53.51 |
| Movement LOS | E | A | A | E | A | A | E | E | D | E | D | D |
| d_A, Approach Delay [s/veh] | 9.92 | | | 10.36 | | | 61.43 | | | 57.50 | | |
| Approach LOS | A | | | B | | | E | | | E | | |
| d_I, Intersection Delay [s/veh] | 18.69 | | | | | | | | | | | |
| Intersection LOS | B | | | | | | | | | | | |
| Intersection V/C | 0.492 | | | | | | | | | | | |

## Sequence

| | | | | | | | | | | | | | | | | |
|---|---|---|---|---|---|---|---|---|---|---|---|---|---|---|---|---|
| Ring 1 | 1 | 2 | 3 | 4 | - | - | - | - | - | - | - | - | - | - | - | - |
| Ring 2 | 5 | 6 | 7 | 8 | - | - | - | - | - | - | - | - | - | - | - | - |
| Ring 3 | - | - | - | - | - | - | - | - | - | - | - | - | - | - | - | - |
| Ring 4 | - | - | - | - | - | - | - | - | - | - | - | - | - | - | - | - |

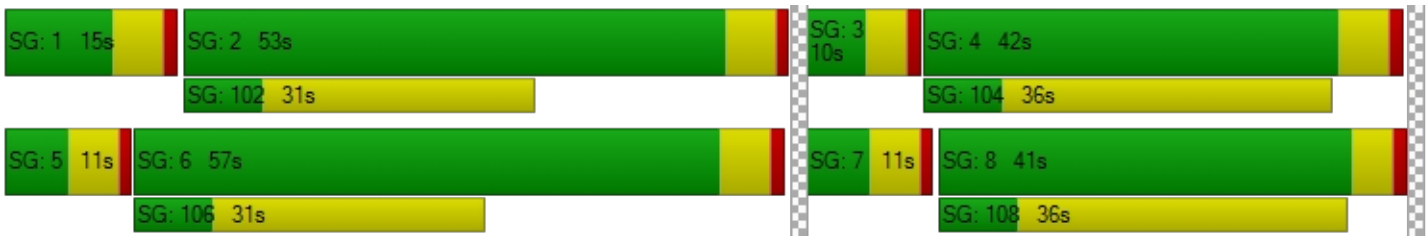

**Intersection Level Of Service Report**
**Intersection 12: Cedar Ave (NS) / Bloomington Ave (EW)**

| | | | |
|---|---|---|---|
| Control Type: | Signalized | Delay (sec / veh): | 13.0 |
| Analysis Method: | HCM 2010 | Level Of Service: | B |
| Analysis Period: | 15 minutes | Volume to Capacity (v/c): | 0.472 |

**Intersection Setup**

| Name | Cedar Avenue | | Cedar Avenue | | Bloomington Avenue | |
|---|---|---|---|---|---|---|
| Approach | Northbound | | Southbound | | Westbound | |
| Lane Configuration | | | | | | |
| Turning Movement | Thru | Right | Left | Thru | Left | Right |
| Lane Width [ft] | 12.00 | 12.00 | 12.00 | 12.00 | 12.00 | 12.00 |
| No. of Lanes in Pocket | 0 | 0 | 1 | 0 | 0 | 1 |
| Pocket Length [ft] | 100.00 | 100.00 | 100.00 | 100.00 | 100.00 | 125.00 |
| Speed [mph] | 40.00 | | 40.00 | | 45.00 | |
| Grade [%] | 0.00 | | 0.00 | | 0.00 | |
| Crosswalk | No | | Yes | | No | |

**volumes**

| Name | Cedar Avenue | | Cedar Avenue | | Bloomington Avenue | |
|---|---|---|---|---|---|---|
| Base Volume Input [veh/h] | 724 | 282 | 68 | 1006 | 315 | 56 |
| Base Volume Adjustment Factor | 1.0000 | 0.0000 | 1.0000 | 1.0000 | 1.0000 | 1.0000 |
| Heavy Vehicles Percentage [%] | 4.00 | 4.00 | 4.00 | 4.00 | 4.00 | 4.00 |
| Growth Rate | 1.00 | 1.00 | 1.00 | 1.00 | 1.00 | 1.00 |
| In-Process Volume [veh/h] | 0 | 0 | 0 | 0 | 0 | 0 |
| Site-Generated Trips [veh/h] | 13 | 40 | 0 | 20 | 49 | 0 |
| Diverted Trips [veh/h] | 0 | 0 | 0 | 0 | 0 | 0 |
| Pass-by Trips [veh/h] | 0 | 0 | 0 | 0 | 0 | 0 |
| Existing Site Adjustment Volume [veh/h] | 0 | 0 | 0 | 0 | 0 | 0 |
| Other Volume [veh/h] | 0 | 0 | 0 | 0 | 0 | 0 |
| Right-Turn on Red Volume [veh/h] | 0 | 0 | 0 | 0 | 0 | 0 |
| Total Hourly Volume [veh/h] | 737 | 40 | 68 | 1026 | 364 | 56 |
| Peak Hour Factor | 0.9480 | 0.9480 | 0.9480 | 0.9480 | 0.9480 | 0.9480 |
| Other Adjustment Factor | 1.0000 | 1.0000 | 1.0000 | 1.0000 | 1.0000 | 1.0000 |
| Total 15-Minute Volume [veh/h] | 194 | 11 | 18 | 271 | 96 | 15 |
| Total Analysis Volume [veh/h] | 777 | 42 | 72 | 1082 | 384 | 59 |
| Presence of On-Street Parking | No | No | No | No | No | No |
| On-Street Parking Maneuver Rate [/h] | 0 | 0 | 0 | 0 | 0 | 0 |
| Local Bus Stopping Rate [/h] | 0 | 0 | 0 | 0 | 0 | 0 |
| Pedestrian Volume [ped/h] | 0 | | 0 | | 0 | |
| Bicycle Volume [bicycles/h] | 0 | | 0 | | 0 | |

**Intersection Settings**

| | |
|---|---|
| Located in CBD | No |
| Signal Coordination Group | 2 - NS - Cedar |
| Cycle Length [s] | 120 |
| Coordination Type | Time of Day Pattern Coordinated |
| Actuation Type | Fully actuated |
| Offset [s] | 71.0 |
| Offset Reference | LagFO |
| Permissive Mode | SingleBand |
| Lost time [s] | 12.00 |

**Phasing & Timing**

| Control Type | Permissive | Permissive | Protected | Permissive | Split | Split |
|---|---|---|---|---|---|---|
| Signal group | 2 | 0 | 1 | 6 | 7 | 0 |
| Auxiliary Signal Groups | | | | | | |
| Lead / Lag | - | - | Lead | - | Lead | - |
| Minimum Green [s] | 5 | 0 | 5 | 5 | 5 | 0 |
| Maximum Green [s] | 30 | 0 | 30 | 30 | 30 | 0 |
| Amber [s] | 4.4 | 0.0 | 4.4 | 4.4 | 4.8 | 0.0 |
| All red [s] | 1.0 | 0.0 | 1.0 | 1.0 | 1.0 | 0.0 |
| Split [s] | 64 | 0 | 20 | 84 | 36 | 0 |
| Vehicle Extension [s] | 3.0 | 0.0 | 3.0 | 3.0 | 3.0 | 0.0 |
| Walk [s] | 7 | 0 | 0 | 7 | 7 | 0 |
| Pedestrian Clearance [s] | 10 | 0 | 0 | 10 | 23 | 0 |
| I1, Start-Up Lost Time [s] | 2.0 | 0.0 | 2.0 | 2.0 | 2.0 | 0.0 |
| I2, Clearance Lost Time [s] | 3.4 | 0.0 | 3.4 | 3.4 | 3.8 | 0.0 |
| Minimum Recall | No | | No | No | No | |
| Maximum Recall | No | | No | No | No | |
| Pedestrian Recall | No | | No | No | No | |
| Detector Location [ft] | 0.0 | 0.0 | 0.0 | 0.0 | 0.0 | 0.0 |
| Detector Length [ft] | 0.0 | 0.0 | 0.0 | 0.0 | 0.0 | 0.0 |
| I, Upstream Filtering Factor | 1.00 | 1.00 | 1.00 | 1.00 | 1.00 | 1.00 |

**Exclusive Pedestrian Phase**

| | |
|---|---|
| Pedestrian Signal Group | 0 |
| Pedestrian Walk [s] | 0 |
| Pedestrian Clearance [s] | 0 |

**Lane Group Calculations**

| Lane Group | C | C | R | L | C | L | R |
|---|---|---|---|---|---|---|---|
| L, Total Lost Time per Cycle [s] | 5.40 | 5.40 | 5.40 | 5.40 | 5.40 | 5.80 | 5.80 |
| l1_p, Permitted Start-Up Lost Time [s] | 0.00 | 0.00 | 0.00 | 0.00 | 0.00 | 0.00 | 0.00 |
| l2, Clearance Lost Time [s] | 3.40 | 3.40 | 3.40 | 3.40 | 3.40 | 3.80 | 3.80 |
| g_i, Effective Green Time [s] | 81 | 81 | 81 | 6 | 92 | 16 | 16 |
| g / C, Green / Cycle | 0.67 | 0.67 | 0.67 | 0.05 | 0.77 | 0.14 | 0.14 |
| (v / s)_i Volume / Saturation Flow Rate | 0.21 | 0.22 | 0.03 | 0.04 | 0.31 | 0.11 | 0.04 |
| s, saturation flow rate [veh/h] | 1827 | 1794 | 1553 | 1740 | 3478 | 3379 | 1553 |
| c, Capacity [veh/h] | 1228 | 1206 | 1044 | 92 | 2679 | 461 | 212 |
| d1, Uniform Delay [s] | 2.24 | 2.24 | 2.06 | 55.05 | 0.00 | 50.45 | 46.48 |
| k, delay calibration | 0.50 | 0.50 | 0.50 | 0.11 | 0.50 | 0.11 | 0.11 |
| I, Upstream Filtering Factor | 1.00 | 1.00 | 1.00 | 1.00 | 1.00 | 1.00 | 1.00 |
| d2, Incremental Delay [s] | 0.68 | 0.71 | 0.07 | 13.21 | 0.45 | 3.97 | 0.71 |
| d3, Initial Queue Delay [s] | 0.00 | 0.00 | 0.00 | 0.00 | 0.00 | 0.00 | 0.00 |
| Rp, platoon ratio | 1.33 | 1.33 | 1.33 | 1.33 | 1.33 | 1.00 | 1.00 |
| PF, progression factor | 1.00 | 1.00 | 1.00 | 1.00 | 1.00 | 1.00 | 1.00 |

**Lane Group Results**

| | | | | | | | |
|---|---|---|---|---|---|---|---|
| X, volume / capacity | 0.32 | 0.32 | 0.04 | 0.78 | 0.40 | 0.83 | 0.28 |
| d, Delay for Lane Group [s/veh] | 2.91 | 2.95 | 2.14 | 68.26 | 0.45 | 54.42 | 47.18 |
| Lane Group LOS | A | A | A | E | A | D | D |
| Critical Lane Group | No | No | No | No | Yes | Yes | No |
| 50th-Percentile Queue Length [veh] | 1.23 | 1.24 | 0.12 | 2.42 | 0.17 | 5.72 | 1.59 |
| 50th-Percentile Queue Length [ft] | 30.75 | 30.93 | 3.06 | 60.44 | 4.23 | 142.89 | 39.69 |
| 95th-Percentile Queue Length [veh] | 2.21 | 2.23 | 0.22 | 4.35 | 0.30 | 9.64 | 2.86 |
| 95th-Percentile Queue Length [ft] | 55.35 | 55.68 | 5.52 | 108.80 | 7.61 | 240.90 | 71.45 |

**Movement, Approach, & Intersection Results**

| | | | | | | |
|---|---|---|---|---|---|---|
| d_M, Delay for Movement [s/veh] | 2.93 | 2.14 | 68.26 | 0.45 | 54.42 | 47.18 |
| Movement LOS | A | A | E | A | D | D |
| d_A, Approach Delay [s/veh] | 2.89 | | 4.69 | | 53.45 | |
| Approach LOS | A | | A | | D | |
| d_I, Intersection Delay [s/veh] | 13.02 | | | | | |
| Intersection LOS | B | | | | | |
| Intersection V/C | 0.472 | | | | | |

## Sequence

| | | | | | | | | | | | | | | | | |
|---|---|---|---|---|---|---|---|---|---|---|---|---|---|---|---|---|
| Ring 1 | 1 | 2 | - | - | - | - | - | - | - | - | - | - | - | - | - | - |
| Ring 2 | - | 6 | 7 | - | - | - | - | - | - | - | - | - | - | - | - | - |
| Ring 3 | - | - | - | - | - | - | - | - | - | - | - | - | - | - | - | - |
| Ring 4 | - | - | - | - | - | - | - | - | - | - | - | - | - | - | - | - |

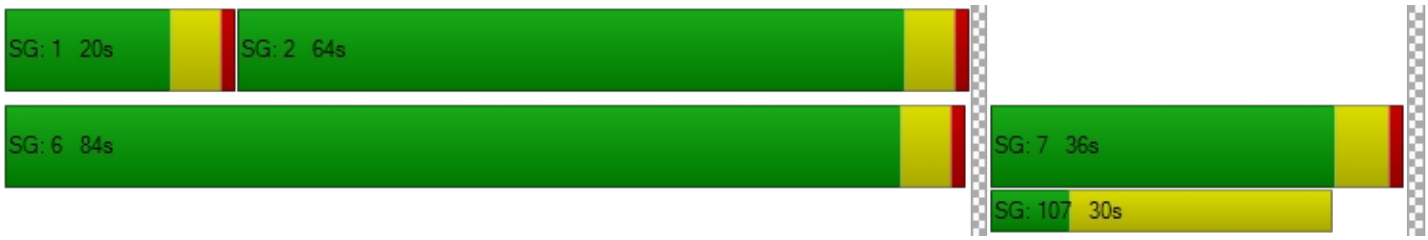

**Intersection Level Of Service Report**
**Intersection 13: Cedar Ave (NS) / Valley Blvd (EW)**

| | | | |
|---|---|---|---|
| Control Type: | Signalized | Delay (sec / veh): | 30.8 |
| Analysis Method: | HCM 2010 | Level Of Service: | C |
| Analysis Period: | 15 minutes | Volume to Capacity (v/c): | 0.847 |

**Intersection Setup**

| Name | Cedar Avenue | | | Cedar Avenue | | | | | | Valley Boulevard | | |
|---|---|---|---|---|---|---|---|---|---|---|---|---|
| Approach | Northbound | | | Southbound | | | Eastbound | | | Westbound | | |
| Lane Configuration | | | | | | | | | | | | |
| Turning Movement | Left | Thru | Right | Left | Thru | Right | Left | Thru | Right | Left | Thru | Right |
| Lane Width [ft] | 12.00 | 12.00 | 12.00 | 12.00 | 12.00 | 12.00 | 12.00 | 12.00 | 12.00 | 12.00 | 12.00 | 12.00 |
| No. of Lanes in Pocket | 2 | 0 | 1 | 2 | 0 | 0 | 2 | 0 | 1 | 2 | 0 | 0 |
| Pocket Length [ft] | 235.00 | 100.00 | 100.00 | 155.00 | 100.00 | 100.00 | 300.00 | 100.00 | 300.00 | 375.00 | 100.00 | 100.00 |
| Speed [mph] | 40.00 | | | 40.00 | | | 30.00 | | | 40.00 | | |
| Grade [%] | 0.00 | | | 0.00 | | | 0.00 | | | 0.00 | | |
| Crosswalk | Yes | | | Yes | | | Yes | | | Yes | | |

**volumes**

| Name | Cedar Avenue | | | Cedar Avenue | | | | | | Valley Boulevard | | |
|---|---|---|---|---|---|---|---|---|---|---|---|---|
| Base Volume Input [veh/h] | 313 | 986 | 211 | 58 | 1196 | 40 | 35 | 154 | 498 | 351 | 186 | 43 |
| Base Volume Adjustment Factor | 1.0000 | 1.0000 | 1.0000 | 1.0000 | 1.0000 | 1.0000 | 1.0000 | 1.0000 | 1.0000 | 1.0000 | 1.0000 | 1.0000 |
| Heavy Vehicles Percentage [%] | 5.00 | 5.00 | 5.00 | 4.00 | 4.00 | 4.00 | 4.00 | 4.00 | 4.00 | 4.00 | 4.00 | 4.00 |
| Growth Rate | 1.00 | 1.00 | 1.00 | 1.00 | 1.00 | 1.00 | 1.00 | 1.00 | 1.00 | 1.00 | 1.00 | 1.00 |
| In-Process Volume [veh/h] | 0 | 0 | 0 | 0 | 0 | 0 | 0 | 0 | 0 | 0 | 0 | 0 |
| Site-Generated Trips [veh/h] | 390 | 0 | -3 | -1 | 0 | 70 | 55 | 20 | 242 | -7 | 18 | -2 |
| Diverted Trips [veh/h] | 0 | 0 | 0 | 0 | 0 | 0 | 0 | 0 | 0 | 0 | 0 | 0 |
| Pass-by Trips [veh/h] | 0 | 0 | 0 | 0 | 0 | 0 | 0 | 0 | 0 | 0 | 0 | 0 |
| Existing Site Adjustment Volume [veh/h] | 0 | 0 | 0 | 0 | 0 | 0 | 0 | 0 | 0 | 0 | 0 | 0 |
| Other Volume [veh/h] | 0 | 0 | 0 | 0 | 0 | 0 | 0 | 0 | 0 | 0 | 0 | 0 |
| Right-Turn on Red Volume [veh/h] | 0 | 0 | 0 | 0 | 0 | 0 | 0 | 0 | 0 | 0 | 0 | 0 |
| Total Hourly Volume [veh/h] | 703 | 986 | 208 | 57 | 1196 | 110 | 90 | 174 | 740 | 344 | 204 | 41 |
| Peak Hour Factor | 0.9760 | 0.9760 | 0.9760 | 0.9760 | 0.9760 | 0.9760 | 0.9760 | 0.9760 | 0.9760 | 0.9760 | 0.9760 | 0.9760 |
| Other Adjustment Factor | 1.0000 | 1.0000 | 1.0000 | 1.0000 | 1.0000 | 1.0000 | 1.0000 | 1.0000 | 1.0000 | 1.0000 | 1.0000 | 1.0000 |
| Total 15-Minute Volume [veh/h] | 180 | 253 | 53 | 15 | 306 | 28 | 23 | 45 | 190 | 88 | 52 | 11 |
| Total Analysis Volume [veh/h] | 720 | 1010 | 213 | 58 | 1225 | 113 | 92 | 178 | 758 | 352 | 209 | 42 |
| Presence of On-Street Parking | No | | No | No | | No | No | | No | No | | No |
| On-Street Parking Maneuver Rate [/h] | 0 | 0 | 0 | 0 | 0 | 0 | 0 | 0 | 0 | 0 | 0 | 0 |
| Local Bus Stopping Rate [/h] | 0 | 0 | 0 | 0 | 0 | 0 | 0 | 0 | 0 | 0 | 0 | 0 |
| Pedestrian Volume [ped/h] | 0 | | | 0 | | | 0 | | | 0 | | |
| Bicycle Volume [bicycles/h] | 0 | | | 0 | | | 0 | | | 0 | | |

**Intersection Settings**

| | |
|---|---|
| Located in CBD | No |
| Signal Coordination Group | 2 - NS - Cedar |
| Cycle Length [s] | 120 |
| Coordination Type | Time of Day Pattern Coordinated |
| Actuation Type | Fully actuated |
| Offset [s] | 62.0 |
| Offset Reference | LagFO |
| Permissive Mode | SingleBand |
| Lost time [s] | 16.00 |

**Phasing & Timing**

| Control Type | Protecte | Permiss | Overlap | Protecte | Permiss | Permiss | Protecte | Permiss | Overlap | Protecte | Permiss | Permiss |
|---|---|---|---|---|---|---|---|---|---|---|---|---|
| Signal group | 5 | 2 | 2 | 1 | 6 | 0 | 3 | 8 | 8 | 7 | 4 | 0 |
| Auxiliary Signal Groups | | | 2,7 | | | | | | 5,8 | | | |
| Lead / Lag | Lead | - | - | Lead | - | - | Lead | - | - | Lead | - | - |
| Minimum Green [s] | 5 | 5 | 5 | 5 | 5 | 0 | 5 | 5 | 5 | 5 | 5 | 0 |
| Maximum Green [s] | 30 | 30 | 30 | 30 | 30 | 0 | 30 | 30 | 30 | 30 | 30 | 0 |
| Amber [s] | 4.4 | 4.4 | 4.4 | 4.4 | 4.4 | 0.0 | 3.7 | 3.7 | 3.7 | 4.4 | 4.4 | 0.0 |
| All red [s] | 1.0 | 1.0 | 1.0 | 1.0 | 1.0 | 0.0 | 1.0 | 1.0 | 1.0 | 1.0 | 1.0 | 0.0 |
| Split [s] | 38 | 47 | 47 | 32 | 41 | 0 | 20 | 21 | 21 | 20 | 21 | 0 |
| Vehicle Extension [s] | 3.0 | 3.0 | 3.0 | 3.0 | 3.0 | 0.0 | 3.0 | 3.0 | 3.0 | 3.0 | 3.0 | 0.0 |
| Walk [s] | 0 | 7 | 7 | 0 | 7 | 0 | 0 | 5 | 5 | 0 | 5 | 0 |
| Pedestrian Clearance [s] | 0 | 28 | 28 | 0 | 27 | 0 | 0 | 10 | 10 | 0 | 10 | 0 |
| I1, Start-Up Lost Time [s] | 2.0 | 2.0 | 2.0 | 2.0 | 2.0 | 0.0 | 2.0 | 2.0 | 2.0 | 2.0 | 2.0 | 0.0 |
| I2, Clearance Lost Time [s] | 3.4 | 3.4 | 3.4 | 3.4 | 3.4 | 0.0 | 2.7 | 2.7 | 2.7 | 3.4 | 3.4 | 0.0 |
| Minimum Recall | No | No | No | No | No | | No | No | No | No | No | |
| Maximum Recall | No | No | No | No | No | | No | No | No | No | No | |
| Pedestrian Recall | No | No | No | No | No | | No | No | No | No | No | |
| Detector Location [ft] | 0.0 | 0.0 | 0.0 | 0.0 | 0.0 | 0.0 | 0.0 | 0.0 | 0.0 | 0.0 | 0.0 | 0.0 |
| Detector Length [ft] | 0.0 | 0.0 | 0.0 | 0.0 | 0.0 | 0.0 | 0.0 | 0.0 | 0.0 | 0.0 | 0.0 | 0.0 |
| I, Upstream Filtering Factor | 1.00 | 1.00 | 1.00 | 1.00 | 1.00 | 1.00 | 1.00 | 1.00 | 1.00 | 1.00 | 1.00 | 1.00 |

**Exclusive Pedestrian Phase**

| | |
|---|---|
| Pedestrian Signal Group | 0 |
| Pedestrian Walk [s] | 0 |
| Pedestrian Clearance [s] | 0 |

**Lane Group Calculations**

| Lane Group | L | C | R | L | C | C | L | C | R | L | C | C |
|---|---|---|---|---|---|---|---|---|---|---|---|---|
| L, Total Lost Time per Cycle [s] | 5.40 | 5.40 | 5.40 | 5.40 | 5.40 | 5.40 | 4.70 | 4.70 | 5.40 | 5.40 | 5.40 | 5.40 |
| l1_p, Permitted Start-Up Lost Time [s] | 0.00 | 0.00 | 0.00 | 0.00 | 0.00 | 0.00 | 0.00 | 0.00 | 0.00 | 0.00 | 0.00 | 0.00 |
| l2, Clearance Lost Time [s] | 3.40 | 3.40 | 0.00 | 3.40 | 3.40 | 3.40 | 2.70 | 2.70 | 0.00 | 3.40 | 3.40 | 3.40 |
| g_i, Effective Green Time [s] | 29 | 66 | 86 | 4 | 41 | 41 | 5 | 14 | 48 | 14 | 24 | 24 |
| g / C, Green / Cycle | 0.24 | 0.55 | 0.71 | 0.04 | 0.34 | 0.34 | 0.04 | 0.12 | 0.40 | 0.12 | 0.20 | 0.20 |
| (v / s)_i Volume / Saturation Flow Rate | 0.22 | 0.29 | 0.14 | 0.02 | 0.26 | 0.26 | 0.03 | 0.10 | 0.28 | 0.10 | 0.07 | 0.07 |
| s, saturation flow rate [veh/h] | 3347 | 3445 | 1538 | 3379 | 3478 | 1749 | 3379 | 1827 | 2749 | 3379 | 1827 | 1723 |
| c, Capacity [veh/h] | 818 | 1896 | 1099 | 123 | 1192 | 599 | 145 | 218 | 1108 | 404 | 358 | 338 |
| d1, Uniform Delay [s] | 38.83 | 9.23 | 0.83 | 55.99 | 28.33 | 28.33 | 55.67 | 49.18 | 22.19 | 49.57 | 38.20 | 38.22 |
| k, delay calibration | 0.11 | 0.50 | 0.50 | 0.11 | 0.50 | 0.50 | 0.11 | 0.19 | 0.11 | 0.11 | 0.11 | 0.11 |
| I, Upstream Filtering Factor | 1.00 | 1.00 | 1.00 | 1.00 | 1.00 | 1.00 | 1.00 | 1.00 | 1.00 | 1.00 | 1.00 | 1.00 |
| d2, Incremental Delay [s] | 3.31 | 1.08 | 0.39 | 2.77 | 4.30 | 8.28 | 4.48 | 12.27 | 0.76 | 5.93 | 0.61 | 0.65 |
| d3, Initial Queue Delay [s] | 0.00 | 0.00 | 0.00 | 0.00 | 0.00 | 0.00 | 0.00 | 0.00 | 0.00 | 0.00 | 0.00 | 0.00 |
| Rp, platoon ratio | 1.33 | 1.33 | 1.33 | 1.33 | 1.33 | 1.33 | 1.33 | 1.33 | 1.33 | 1.33 | 1.33 | 1.33 |
| PF, progression factor | 1.00 | 1.00 | 1.00 | 1.00 | 1.00 | 1.00 | 1.00 | 1.00 | 1.00 | 1.00 | 1.00 | 1.00 |

**Lane Group Results**

| | | | | | | | | | | | | |
|---|---|---|---|---|---|---|---|---|---|---|---|---|
| X, volume / capacity | 0.88 | 0.53 | 0.19 | 0.47 | 0.75 | 0.75 | 0.63 | 0.81 | 0.68 | 0.87 | 0.36 | 0.36 |
| d, Delay for Lane Group [s/veh] | 42.14 | 10.31 | 1.22 | 58.75 | 32.63 | 36.61 | 60.15 | 61.45 | 22.95 | 55.50 | 38.81 | 38.87 |
| Lane Group LOS | D | B | A | E | C | D | E | E | C | E | D | D |
| Critical Lane Group | Yes | No | No | No | No | Yes | No | No | Yes | Yes | No | No |
| 50th-Percentile Queue Length [veh] | 9.48 | 4.49 | 0.34 | 0.89 | 9.95 | 10.67 | 1.44 | 5.70 | 6.97 | 5.19 | 3.02 | 2.88 |
| 50th-Percentile Queue Length [ft] | 237.04 | 112.36 | 8.53 | 22.16 | 248.71 | 266.68 | 36.07 | 142.53 | 174.29 | 129.75 | 75.59 | 72.00 |
| 95th-Percentile Queue Length [veh] | 14.53 | 7.97 | 0.61 | 1.60 | 15.12 | 16.02 | 2.60 | 9.62 | 11.30 | 8.93 | 5.44 | 5.18 |
| 95th-Percentile Queue Length [ft] | 363.29 | 199.29 | 15.35 | 39.89 | 378.02 | 400.59 | 64.92 | 240.43 | 282.55 | 223.15 | 136.06 | 129.60 |

**Movement, Approach, & Intersection Results**

| | | | | | | | | | | | | |
|---|---|---|---|---|---|---|---|---|---|---|---|---|
| d_M, Delay for Movement [s/veh] | 42.14 | 10.31 | 1.22 | 58.75 | 33.72 | 36.61 | 60.15 | 61.45 | 22.95 | 55.50 | 38.83 | 38.87 |
| Movement LOS | D | B | A | E | C | D | E | E | C | E | D | D |
| d_A, Approach Delay [s/veh] | 21.11 | | | 34.99 | | | 32.94 | | | 48.57 | | |
| Approach LOS | C | | | C | | | C | | | D | | |
| d_I, Intersection Delay [s/veh] | 30.79 | | | | | | | | | | | |
| Intersection LOS | C | | | | | | | | | | | |
| Intersection V/C | 0.847 | | | | | | | | | | | |

## Sequence

| | | | | | | | | | | | | | | | | |
|---|---|---|---|---|---|---|---|---|---|---|---|---|---|---|---|---|
| Ring 1 | 1 | 2 | 3 | 4 | - | - | - | - | - | - | - | - | - | - | - | - |
| Ring 2 | 5 | 6 | 7 | 8 | - | - | - | - | - | - | - | - | - | - | - | - |
| Ring 3 | - | - | - | - | - | - | - | - | - | - | - | - | - | - | - | - |
| Ring 4 | - | - | - | - | - | - | - | - | - | - | - | - | - | - | - | - |

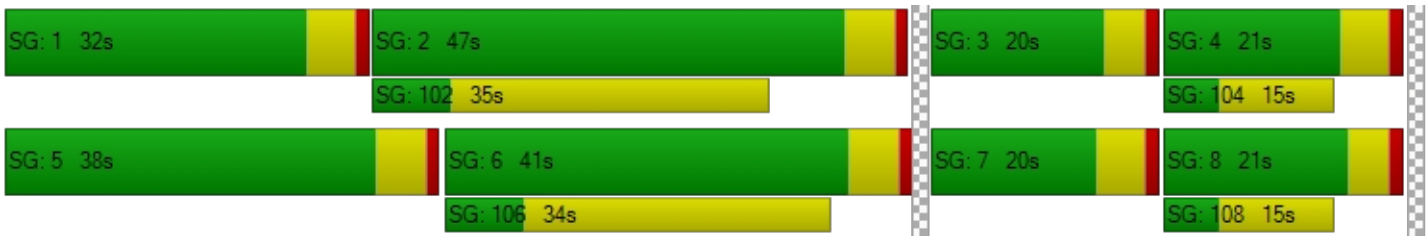

**Intersection Level Of Service Report**
**Intersection 14: Cedar Ave (NS) / I-10 Westbound Ramps (EW)**

| | | | |
|---|---|---|---|
| Control Type: | Signalized | Delay (sec / veh): | 91.3 |
| Analysis Method: | HCM 2010 | Level Of Service: | F |
| Analysis Period: | 15 minutes | Volume to Capacity (v/c): | 1.271 |

**Intersection Setup**

| Name | Cedar Avenue | | | Cedar Avenue | | | | | | I-10 Westbound Ramps | | |
|---|---|---|---|---|---|---|---|---|---|---|---|---|
| Approach | Northbound | | | Southbound | | | Eastbound | | | Westbound | | |
| Lane Configuration | | | | | | | | | | | | |
| Turning Movement | Left | Thru | Right | Left | Thru | Right | Left | Thru | Right | Left | Thru | Right |
| Lane Width [ft] | 12.00 | 12.00 | 12.00 | 12.00 | 12.00 | 12.00 | 12.00 | 12.00 | 12.00 | 12.00 | 12.00 | 12.00 |
| No. of Lanes in Pocket | 1 | 0 | 0 | 0 | 0 | 1 | 0 | 0 | 0 | 0 | 0 | 1 |
| Pocket Length [ft] | 305.00 | 100.00 | 100.00 | 100.00 | 100.00 | 100.00 | 100.00 | 100.00 | 100.00 | 100.00 | 100.00 | 485.00 |
| Speed [mph] | 40.00 | | | 40.00 | | | 30.00 | | | 30.00 | | |
| Grade [%] | 0.00 | | | 0.00 | | | 0.00 | | | 0.00 | | |
| Crosswalk | No | | | No | | | Yes | | | Yes | | |

**volumes**

| Name | Cedar Avenue | | | Cedar Avenue | | | | | | I-10 Westbound Ramps | | |
|---|---|---|---|---|---|---|---|---|---|---|---|---|
| Base Volume Input [veh/h] | 293 | 1096 | 0 | 0 | 1147 | 889 | 0 | 0 | 0 | 239 | 1 | 394 |
| Base Volume Adjustment Factor | 1.0000 | 1.0000 | 1.0000 | 1.0000 | 1.0000 | 1.0000 | 1.0000 | 1.0000 | 1.0000 | 1.0000 | 1.0000 | 1.0000 |
| Heavy Vehicles Percentage [%] | 5.00 | 5.00 | 2.00 | 2.00 | 5.00 | 5.00 | 2.00 | 2.00 | 2.00 | 6.00 | 6.00 | 6.00 |
| Growth Rate | 1.00 | 1.00 | 1.00 | 1.00 | 1.00 | 1.00 | 1.00 | 1.00 | 1.00 | 1.00 | 1.00 | 1.00 |
| In-Process Volume [veh/h] | 0 | 0 | 0 | 0 | 0 | 0 | 0 | 0 | 0 | 0 | 0 | 0 |
| Site-Generated Trips [veh/h] | 0 | 235 | 0 | 0 | 126 | 109 | 8 | 0 | 0 | 0 | 0 | 144 |
| Diverted Trips [veh/h] | 0 | 0 | 0 | 0 | 0 | 0 | 0 | 0 | 0 | 0 | 0 | 0 |
| Pass-by Trips [veh/h] | 0 | 0 | 0 | 0 | 0 | 0 | 0 | 0 | 0 | 0 | 0 | 0 |
| Existing Site Adjustment Volume [veh/h] | 0 | 0 | 0 | 0 | 0 | 0 | 0 | 0 | 0 | 0 | 0 | 0 |
| Other Volume [veh/h] | 0 | 0 | 0 | 0 | 0 | 0 | 0 | 0 | 0 | 0 | 0 | 0 |
| Right-Turn on Red Volume [veh/h] | 0 | 0 | 0 | 0 | 0 | 0 | 0 | 0 | 0 | 0 | 0 | 0 |
| Total Hourly Volume [veh/h] | 293 | 1331 | 0 | 0 | 1273 | 998 | 8 | 0 | 0 | 239 | 1 | 538 |
| Peak Hour Factor | 0.9350 | 0.9350 | 1.0000 | 1.0000 | 0.9350 | 0.9350 | 1.0000 | 1.0000 | 1.0000 | 0.9350 | 0.9350 | 0.9350 |
| Other Adjustment Factor | 1.0000 | 1.0000 | 1.0000 | 1.0000 | 1.0000 | 1.0000 | 1.0000 | 1.0000 | 1.0000 | 1.0000 | 1.0000 | 1.0000 |
| Total 15-Minute Volume [veh/h] | 78 | 356 | 0 | 0 | 340 | 267 | 2 | 0 | 0 | 64 | 0 | 144 |
| Total Analysis Volume [veh/h] | 313 | 1424 | 0 | 0 | 1361 | 1067 | 8 | 0 | 0 | 256 | 1 | 575 |
| Presence of On-Street Parking | No | | No | No | | No | | | | No | | No |
| On-Street Parking Maneuver Rate [/h] | 0 | 0 | 0 | 0 | 0 | 0 | 0 | 0 | 0 | 0 | 0 | 0 |
| Local Bus Stopping Rate [/h] | 0 | 0 | 0 | 0 | 0 | 0 | 0 | 0 | 0 | 0 | 0 | 0 |
| Pedestrian Volume [ped/h] | 0 | | | 0 | | | 0 | | | 0 | | |
| Bicycle Volume [bicycles/h] | 0 | | | 0 | | | 0 | | | 0 | | |

**Intersection Settings**

| | |
|---|---|
| Located in CBD | No |
| Signal Coordination Group | 2 - NS - Cedar |
| Cycle Length [s] | 120 |
| Coordination Type | Time of Day Pattern Coordinated |
| Actuation Type | Fully actuated |
| Offset [s] | 71.0 |
| Offset Reference | LagFO |
| Permissive Mode | SingleBand |
| Lost time [s] | 12.00 |

**Phasing & Timing**

| Control Type | Protecte | Permiss | Permiss | Permiss | Permiss | Permiss | Permiss | Permiss | Permiss | Permiss | Permiss | Permiss |
|---|---|---|---|---|---|---|---|---|---|---|---|---|
| Signal group | 5 | 2 | 0 | 0 | 6 | 0 | 0 | 0 | 0 | 0 | 4 | 0 |
| Auxiliary Signal Groups | | | | | | | | | | | | |
| Lead / Lag | Lead | - | - | - | - | - | - | - | - | - | - | - |
| Minimum Green [s] | 5 | 5 | 0 | 0 | 5 | 0 | 0 | 0 | 0 | 0 | 5 | 0 |
| Maximum Green [s] | 30 | 30 | 0 | 0 | 30 | 0 | 0 | 0 | 0 | 0 | 30 | 0 |
| Amber [s] | 4.4 | 4.4 | 0.0 | 0.0 | 4.4 | 0.0 | 0.0 | 0.0 | 0.0 | 0.0 | 3.7 | 0.0 |
| All red [s] | 1.0 | 1.0 | 0.0 | 0.0 | 1.0 | 0.0 | 0.0 | 0.0 | 0.0 | 0.0 | 1.0 | 0.0 |
| Split [s] | 21 | 85 | 0 | 0 | 64 | 0 | 0 | 0 | 0 | 0 | 35 | 0 |
| Vehicle Extension [s] | 3.0 | 3.0 | 0.0 | 0.0 | 3.0 | 0.0 | 0.0 | 0.0 | 0.0 | 0.0 | 3.0 | 0.0 |
| Walk [s] | 0 | 7 | 0 | 0 | 7 | 0 | 0 | 0 | 0 | 0 | 7 | 0 |
| Pedestrian Clearance [s] | 0 | 17 | 0 | 0 | 17 | 0 | 0 | 0 | 0 | 0 | 10 | 0 |
| I1, Start-Up Lost Time [s] | 2.0 | 2.0 | 0.0 | 0.0 | 2.0 | 0.0 | 0.0 | 0.0 | 0.0 | 0.0 | 2.0 | 0.0 |
| I2, Clearance Lost Time [s] | 3.4 | 3.4 | 0.0 | 0.0 | 3.4 | 0.0 | 0.0 | 0.0 | 0.0 | 0.0 | 2.7 | 0.0 |
| Minimum Recall | No | No | | | No | | | | | | No | |
| Maximum Recall | No | No | | | No | | | | | | No | |
| Pedestrian Recall | No | No | | | No | | | | | | No | |
| Detector Location [ft] | 0.0 | 0.0 | 0.0 | 0.0 | 0.0 | 0.0 | 0.0 | 0.0 | 0.0 | 0.0 | 0.0 | 0.0 |
| Detector Length [ft] | 0.0 | 0.0 | 0.0 | 0.0 | 0.0 | 0.0 | 0.0 | 0.0 | 0.0 | 0.0 | 0.0 | 0.0 |
| I, Upstream Filtering Factor | 1.00 | 1.00 | 1.00 | 1.00 | 1.00 | 1.00 | 1.00 | 1.00 | 1.00 | 1.00 | 1.00 | 1.00 |

**Exclusive Pedestrian Phase**

| | |
|---|---|
| Pedestrian Signal Group | 0 |
| Pedestrian Walk [s] | 0 |
| Pedestrian Clearance [s] | 0 |

**Lane Group Calculations**

| Lane Group | L | C | C | R | | C | R |
|---|---|---|---|---|---|---|---|
| L, Total Lost Time per Cycle [s] | 5.40 | 5.40 | 5.40 | 5.40 | | 4.70 | 4.70 |
| l1_p, Permitted Start-Up Lost Time [s] | 0.00 | 0.00 | 0.00 | 0.00 | | 0.00 | 0.00 |
| l2, Clearance Lost Time [s] | 3.40 | 3.40 | 3.40 | 3.40 | | 2.70 | 2.70 |
| g_i, Effective Green Time [s] | 16 | 80 | 59 | 59 | | 30 | 30 |
| g / C, Green / Cycle | 0.13 | 0.66 | 0.49 | 0.49 | | 0.25 | 0.25 |
| (v / s)_i Volume / Saturation Flow Rate | 0.18 | 0.41 | 0.28 | 0.69 | | 0.26 | 0.27 |
| s, saturation flow rate [veh/h] | 1723 | 3445 | 4929 | 1538 | | 1630 | 1524 |
| c, Capacity [veh/h] | 225 | 2285 | 2404 | 750 | | 412 | 385 |
| d1, Uniform Delay [s] | 52.14 | 11.60 | 21.75 | 30.73 | | 44.82 | 44.82 |
| k, delay calibration | 0.50 | 0.50 | 0.50 | 0.50 | | 0.46 | 0.48 |
| I, Upstream Filtering Factor | 1.00 | 1.00 | 1.00 | 1.00 | | 1.00 | 1.00 |
| d2, Incremental Delay [s] | 201.06 | 1.29 | 0.97 | 197.94 | | 49.78 | 62.21 |
| d3, Initial Queue Delay [s] | 0.00 | 0.00 | 0.00 | 0.00 | | 0.00 | 0.00 |
| Rp, platoon ratio | 1.00 | 1.00 | 1.00 | 1.00 | | 1.00 | 1.00 |
| PF, progression factor | 1.00 | 1.00 | 1.00 | 1.00 | | 1.00 | 1.00 |

**Lane Group Results**

| | | | | | | | |
|---|---|---|---|---|---|---|---|
| X, volume / capacity | 1.39 | 0.62 | 0.57 | 1.42 | | 1.03 | 1.06 |
| d, Delay for Lane Group [s/veh] | 253.20 | 12.89 | 22.72 | 228.67 | | 94.61 | 107.03 |
| Lane Group LOS | F | B | C | F | | F | F |
| Critical Lane Group | Yes | No | No | Yes | | No | Yes |
| 50th-Percentile Queue Length [veh] | 19.20 | 9.98 | 8.82 | 61.33 | | 17.83 | 17.99 |
| 50th-Percentile Queue Length [ft] | 479.97 | 249.47 | 220.46 | 1533.27 | | 445.73 | 449.82 |
| 95th-Percentile Queue Length [veh] | 29.98 | 15.16 | 13.69 | 92.83 | | 25.17 | 25.84 |
| 95th-Percentile Queue Length [ft] | 749.47 | 378.99 | 342.21 | 2320.80 | | 629.36 | 646.10 |

**Movement, Approach, & Intersection Results**

| | | | | | | | | | | | | |
|---|---|---|---|---|---|---|---|---|---|---|---|---|
| d_M, Delay for Movement [s/veh] | 253.20 | 12.89 | 0.00 | 0.00 | 22.72 | 228.67 | 0.00 | 0.00 | 0.00 | 94.61 | 94.61 | 103.51 |
| Movement LOS | F | B | | | C | F | | | | F | F | F |
| d_A, Approach Delay [s/veh] | 56.19 | | | 113.23 | | | 0.00 | | | 100.71 | | |
| Approach LOS | E | | | F | | | A | | | F | | |
| d_I, Intersection Delay [s/veh] | 91.32 | | | | | | | | | | | |
| Intersection LOS | F | | | | | | | | | | | |
| Intersection V/C | 1.271 | | | | | | | | | | | |

## Sequence

| | | | | | | | | | | | | | | | | |
|---|---|---|---|---|---|---|---|---|---|---|---|---|---|---|---|---|
| Ring 1 | - | 2 | 4 | - | - | - | - | - | - | - | - | - | - | - | - | - |
| Ring 2 | 5 | 6 | - | - | - | - | - | - | - | - | - | - | - | - | - | - |
| Ring 3 | - | - | - | - | - | - | - | - | - | - | - | - | - | - | - | - |
| Ring 4 | - | - | - | - | - | - | - | - | - | - | - | - | - | - | - | - |

**Intersection Level Of Service Report**
**Intersection 15: Cedar Ave (NS) / I-10 Eastbound Ramps (EW)**

| | | | |
|---|---|---|---|
| Control Type: | Signalized | Delay (sec / veh): | 55.7 |
| Analysis Method: | HCM 2010 | Level Of Service: | E |
| Analysis Period: | 15 minutes | Volume to Capacity (v/c): | 0.961 |

**Intersection Setup**

| Name | Cedar Avenue | | | Cedar Avenue | | | | | | I-10 Eastbound Ramps | | |
|---|---|---|---|---|---|---|---|---|---|---|---|---|
| Approach | Northbound | | | Southbound | | | Eastbound | | | Westbound | | |
| Lane Configuration | | | | | | | | | | | | |
| Turning Movement | Left | Thru | Right | Left | Thru | Right | Left | Thru | Right | Left | Thru | Right |
| Lane Width [ft] | 12.00 | 12.00 | 12.00 | 12.00 | 12.00 | 12.00 | 12.00 | 12.00 | 12.00 | 12.00 | 12.00 | 12.00 |
| No. of Lanes in Pocket | 0 | 0 | 1 | 1 | 0 | 0 | 1 | 0 | 0 | 0 | 0 | 0 |
| Pocket Length [ft] | 100.00 | 100.00 | 555.00 | 305.00 | 100.00 | 100.00 | 340.00 | 100.00 | 100.00 | 100.00 | 100.00 | 100.00 |
| Speed [mph] | 40.00 | | | 40.00 | | | 30.00 | | | 30.00 | | |
| Grade [%] | 0.00 | | | 0.00 | | | 0.00 | | | 0.00 | | |
| Crosswalk | No | | | No | | | Yes | | | Yes | | |

**volumes**

| Name | Cedar Avenue | | | Cedar Avenue | | | | | | I-10 Eastbound Ramps | | |
|---|---|---|---|---|---|---|---|---|---|---|---|---|
| Base Volume Input [veh/h] | 0 | 928 | 313 | 467 | 924 | 0 | 468 | 2 | 221 | 0 | 0 | 0 |
| Base Volume Adjustment Factor | 1.0000 | 1.0000 | 1.0000 | 1.0000 | 1.0000 | 1.0000 | 1.0000 | 1.0000 | 1.0000 | 1.0000 | 1.0000 | 1.0000 |
| Heavy Vehicles Percentage [%] | 2.00 | 5.00 | 5.00 | 5.00 | 5.00 | 2.00 | 6.00 | 6.00 | 6.00 | 2.00 | 2.00 | 2.00 |
| Growth Rate | 1.00 | 1.00 | 1.00 | 1.00 | 1.00 | 1.00 | 1.00 | 1.00 | 1.00 | 1.00 | 1.00 | 1.00 |
| In-Process Volume [veh/h] | 0 | 0 | 0 | 0 | 0 | 0 | 0 | 0 | 0 | 0 | 0 | 0 |
| Site-Generated Trips [veh/h] | 0 | 51 | 0 | 93 | 33 | 0 | 184 | 0 | 0 | 0 | 0 | 0 |
| Diverted Trips [veh/h] | 0 | 0 | 0 | 0 | 0 | 0 | 0 | 0 | 0 | 0 | 0 | 0 |
| Pass-by Trips [veh/h] | 0 | 0 | 0 | 0 | 0 | 0 | 0 | 0 | 0 | 0 | 0 | 0 |
| Existing Site Adjustment Volume [veh/h] | 0 | 0 | 0 | 0 | 0 | 0 | 0 | 0 | 0 | 0 | 0 | 0 |
| Other Volume [veh/h] | 0 | 0 | 0 | 0 | 0 | 0 | 0 | 0 | 0 | 0 | 0 | 0 |
| Right-Turn on Red Volume [veh/h] | 0 | 0 | 0 | 0 | 0 | 0 | 0 | 0 | 0 | 0 | 0 | 0 |
| Total Hourly Volume [veh/h] | 0 | 979 | 313 | 560 | 957 | 0 | 652 | 2 | 221 | 0 | 0 | 0 |
| Peak Hour Factor | 1.0000 | 0.9240 | 0.9240 | 0.9240 | 0.9240 | 1.0000 | 0.9240 | 0.9240 | 0.9240 | 1.0000 | 1.0000 | 1.0000 |
| Other Adjustment Factor | 1.0000 | 1.0000 | 1.0000 | 1.0000 | 1.0000 | 1.0000 | 1.0000 | 1.0000 | 1.0000 | 1.0000 | 1.0000 | 1.0000 |
| Total 15-Minute Volume [veh/h] | 0 | 265 | 85 | 152 | 259 | 0 | 176 | 1 | 60 | 0 | 0 | 0 |
| Total Analysis Volume [veh/h] | 0 | 1060 | 339 | 606 | 1036 | 0 | 706 | 2 | 239 | 0 | 0 | 0 |
| Presence of On-Street Parking | No | | No | No | | No | No | | No | | | |
| On-Street Parking Maneuver Rate [/h] | 0 | 0 | 0 | 0 | 0 | 0 | 0 | 0 | 0 | 0 | 0 | 0 |
| Local Bus Stopping Rate [/h] | 0 | 0 | 0 | 0 | 0 | 0 | 0 | 0 | 0 | 0 | 0 | 0 |
| Pedestrian Volume [ped/h] | 0 | | | 0 | | | 0 | | | 0 | | |
| Bicycle Volume [bicycles/h] | 0 | | | 0 | | | 0 | | | 0 | | |

**Intersection Settings**

| | |
|---|---|
| Located in CBD | No |
| Signal Coordination Group | 2 - NS - Cedar |
| Cycle Length [s] | 120 |
| Coordination Type | Time of Day Pattern Coordinated |
| Actuation Type | Fully actuated |
| Offset [s] | 65.0 |
| Offset Reference | LagFO |
| Permissive Mode | SingleBand |
| Lost time [s] | 12.00 |

**Phasing & Timing**

| Control Type | Permiss | Permiss | Permiss | Protecte | Permiss | Permiss | Permiss | Permiss | Permiss | Permiss | Permiss | Permiss |
|---|---|---|---|---|---|---|---|---|---|---|---|---|
| Signal group | 0 | 2 | 0 | 1 | 6 | 0 | 0 | 8 | 0 | 0 | 0 | 0 |
| Auxiliary Signal Groups | | | | | | | | | | | | |
| Lead / Lag | - | - | - | Lead | - | - | - | - | - | - | - | - |
| Minimum Green [s] | 0 | 5 | 0 | 5 | 5 | 0 | 0 | 5 | 0 | 0 | 0 | 0 |
| Maximum Green [s] | 0 | 30 | 0 | 30 | 30 | 0 | 0 | 30 | 0 | 0 | 0 | 0 |
| Amber [s] | 0.0 | 4.4 | 0.0 | 4.4 | 4.4 | 0.0 | 0.0 | 3.7 | 0.0 | 0.0 | 0.0 | 0.0 |
| All red [s] | 0.0 | 1.0 | 0.0 | 1.0 | 1.0 | 0.0 | 0.0 | 1.0 | 0.0 | 0.0 | 0.0 | 0.0 |
| Split [s] | 0 | 34 | 0 | 47 | 81 | 0 | 0 | 39 | 0 | 0 | 0 | 0 |
| Vehicle Extension [s] | 0.0 | 3.0 | 0.0 | 3.0 | 3.0 | 0.0 | 0.0 | 3.0 | 0.0 | 0.0 | 0.0 | 0.0 |
| Walk [s] | 0 | 7 | 0 | 0 | 7 | 0 | 0 | 7 | 0 | 0 | 0 | 0 |
| Pedestrian Clearance [s] | 0 | 21 | 0 | 0 | 16 | 0 | 0 | 10 | 0 | 0 | 0 | 0 |
| I1, Start-Up Lost Time [s] | 0.0 | 2.0 | 0.0 | 2.0 | 2.0 | 0.0 | 0.0 | 2.0 | 0.0 | 0.0 | 0.0 | 0.0 |
| I2, Clearance Lost Time [s] | 0.0 | 3.4 | 0.0 | 3.4 | 3.4 | 0.0 | 0.0 | 2.7 | 0.0 | 0.0 | 0.0 | 0.0 |
| Minimum Recall | | No | | No | No | | | No | | | | |
| Maximum Recall | | No | | No | No | | | No | | | | |
| Pedestrian Recall | | No | | No | No | | | No | | | | |
| Detector Location [ft] | 0.0 | 0.0 | 0.0 | 0.0 | 0.0 | 0.0 | 0.0 | 0.0 | 0.0 | 0.0 | 0.0 | 0.0 |
| Detector Length [ft] | 0.0 | 0.0 | 0.0 | 0.0 | 0.0 | 0.0 | 0.0 | 0.0 | 0.0 | 0.0 | 0.0 | 0.0 |
| I, Upstream Filtering Factor | 1.00 | 1.00 | 1.00 | 1.00 | 1.00 | 1.00 | 1.00 | 1.00 | 1.00 | 1.00 | 1.00 | 1.00 |

**Exclusive Pedestrian Phase**

| | |
|---|---|
| Pedestrian Signal Group | 0 |
| Pedestrian Walk [s] | 0 |
| Pedestrian Clearance [s] | 0 |

**Lane Group Calculations**

| Lane Group | C | R | L | C | L | C | |
|---|---|---|---|---|---|---|---|
| L, Total Lost Time per Cycle [s] | 5.40 | 5.40 | 5.40 | 5.40 | 4.70 | 4.70 | |
| l1_p, Permitted Start-Up Lost Time [s] | 0.00 | 0.00 | 0.00 | 0.00 | 0.00 | 0.00 | |
| l2, Clearance Lost Time [s] | 3.40 | 3.40 | 3.40 | 3.40 | 2.70 | 2.70 | |
| g_i, Effective Green Time [s] | 29 | 29 | 42 | 76 | 34 | 34 | |
| g / C, Green / Cycle | 0.24 | 0.24 | 0.35 | 0.63 | 0.29 | 0.29 | |
| (v / s)_i Volume / Saturation Flow Rate | 0.22 | 0.22 | 0.35 | 0.30 | 0.28 | 0.29 | |
| s, saturation flow rate [veh/h] | 4929 | 1538 | 1723 | 3445 | 1707 | 1609 | |
| c, Capacity [veh/h] | 1179 | 368 | 596 | 2170 | 488 | 460 | |
| d1, Uniform Delay [s] | 44.22 | 44.53 | 39.24 | 11.74 | 42.38 | 42.83 | |
| k, delay calibration | 0.50 | 0.50 | 0.45 | 0.50 | 0.42 | 0.46 | |
| I, Upstream Filtering Factor | 1.00 | 1.00 | 1.00 | 1.00 | 1.00 | 1.00 | |
| d2, Incremental Delay [s] | 10.95 | 30.70 | 39.35 | 0.75 | 31.53 | 47.11 | |
| d3, Initial Queue Delay [s] | 0.00 | 0.00 | 0.00 | 0.00 | 0.00 | 0.00 | |
| Rp, platoon ratio | 1.00 | 1.00 | 1.00 | 1.00 | 1.00 | 1.00 | |
| PF, progression factor | 1.00 | 1.00 | 1.00 | 1.00 | 1.00 | 1.00 | |

**Lane Group Results**

| | | | | | | | |
|---|---|---|---|---|---|---|---|
| X, volume / capacity | 0.90 | 0.92 | 1.02 | 0.48 | 0.97 | 1.03 | |
| d, Delay for Lane Group [s/veh] | 55.17 | 75.22 | 78.59 | 12.50 | 73.91 | 89.94 | |
| Lane Group LOS | E | E | F | B | E | F | |
| Critical Lane Group | No | Yes | Yes | No | No | Yes | |
| 50th-Percentile Queue Length [veh] | 11.11 | 12.72 | 23.32 | 6.89 | 18.04 | 19.49 | |
| 50th-Percentile Queue Length [ft] | 277.80 | 317.93 | 582.91 | 172.23 | 451.02 | 487.25 | |
| 95th-Percentile Queue Length [veh] | 16.58 | 18.57 | 31.61 | 11.19 | 25.01 | 27.17 | |
| 95th-Percentile Queue Length [ft] | 414.48 | 464.14 | 790.19 | 279.84 | 625.16 | 679.30 | |

**Movement, Approach, & Intersection Results**

| | | | | | | | | | | | | |
|---|---|---|---|---|---|---|---|---|---|---|---|---|
| d_M, Delay for Movement [s/veh] | 0.00 | 55.17 | 75.22 | 78.59 | 12.50 | 0.00 | 79.17 | 89.94 | 89.94 | 0.00 | 0.00 | 0.00 |
| Movement LOS | | E | E | F | B | | E | F | F | | | |
| d_A, Approach Delay [s/veh] | 60.03 | | | 36.89 | | | 81.90 | | | 0.00 | | |
| Approach LOS | E | | | D | | | F | | | A | | |
| d_I, Intersection Delay [s/veh] | 55.70 | | | | | | | | | | | |
| Intersection LOS | E | | | | | | | | | | | |
| Intersection V/C | 0.961 | | | | | | | | | | | |

## Sequence

| | | | | | | | | | | | | | | | | |
|---|---|---|---|---|---|---|---|---|---|---|---|---|---|---|---|---|
| Ring 1 | 1 | 2 | - | - | - | - | - | - | - | - | - | - | - | - | - | - |
| Ring 2 | - | 6 | 8 | - | - | - | - | - | - | - | - | - | - | - | - | - |
| Ring 3 | - | - | - | - | - | - | - | - | - | - | - | - | - | - | - | - |
| Ring 4 | - | - | - | - | - | - | - | - | - | - | - | - | - | - | - | - |

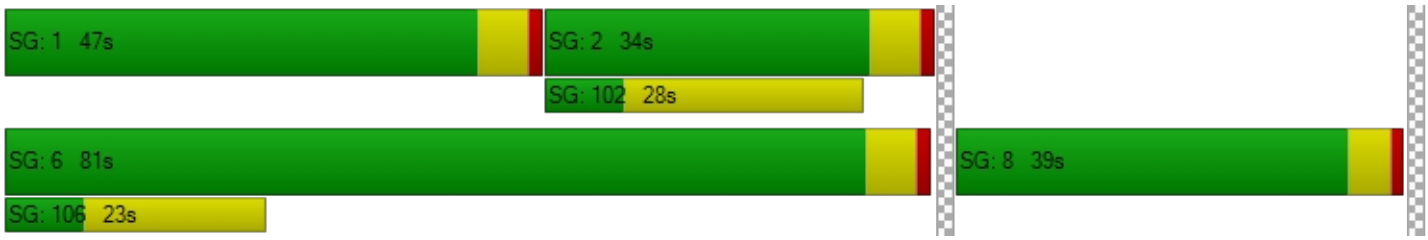

**Intersection Level Of Service Report**
**Intersection 16: Cedar Ave (NS) / Slover Ave (EW)**

| | | | |
|---|---|---|---|
| Control Type: | Signalized | Delay (sec / veh): | 22.6 |
| Analysis Method: | HCM 2010 | Level Of Service: | C |
| Analysis Period: | 15 minutes | Volume to Capacity (v/c): | 0.573 |

**Intersection Setup**

| Name | Cedar Avenue | | | Cedar Avenue | | | Slover Avenue | | | Slover Avenue | | |
|---|---|---|---|---|---|---|---|---|---|---|---|---|
| Approach | Northbound | | | Southbound | | | Eastbound | | | Westbound | | |
| Lane Configuration | | | | | | | | | | | | |
| Turning Movement | Left | Thru | Right | Left | Thru | Right | Left | Thru | Right | Left | Thru | Right |
| Lane Width [ft] | 12.00 | 12.00 | 12.00 | 12.00 | 12.00 | 12.00 | 12.00 | 12.00 | 12.00 | 12.00 | 12.00 | 12.00 |
| No. of Lanes in Pocket | 1 | 0 | 0 | 1 | 0 | 0 | 1 | 0 | 0 | 1 | 0 | 0 |
| Pocket Length [ft] | 200.00 | 100.00 | 100.00 | 85.00 | 100.00 | 100.00 | 185.00 | 100.00 | 100.00 | 150.00 | 100.00 | 100.00 |
| Speed [mph] | 45.00 | | | 45.00 | | | 50.00 | | | 50.00 | | |
| Grade [%] | 0.00 | | | 0.00 | | | 0.00 | | | 0.00 | | |
| Crosswalk | Yes | | | Yes | | | Yes | | | Yes | | |

**volumes**

| Name | Cedar Avenue | | | Cedar Avenue | | | Slover Avenue | | | Slover Avenue | | |
|---|---|---|---|---|---|---|---|---|---|---|---|---|
| Base Volume Input [veh/h] | 45 | 790 | 55 | 77 | 704 | 16 | 19 | 108 | 72 | 150 | 68 | 32 |
| Base Volume Adjustment Factor | 1.0000 | 1.0000 | 1.0000 | 1.0000 | 1.0000 | 1.0000 | 1.0000 | 1.0000 | 1.0000 | 1.0000 | 1.0000 | 1.0000 |
| Heavy Vehicles Percentage [%] | 5.00 | 5.00 | 5.00 | 5.00 | 5.00 | 5.00 | 2.00 | 2.00 | 2.00 | 2.00 | 2.00 | 2.00 |
| Growth Rate | 1.00 | 1.00 | 1.00 | 1.00 | 1.00 | 1.00 | 1.00 | 1.00 | 1.00 | 1.00 | 1.00 | 1.00 |
| In-Process Volume [veh/h] | 0 | 0 | 0 | 0 | 0 | 0 | 0 | 0 | 0 | 0 | 0 | 0 |
| Site-Generated Trips [veh/h] | 0 | 16 | 0 | 4 | 15 | 14 | 24 | 0 | 0 | 0 | 0 | 11 |
| Diverted Trips [veh/h] | 0 | 0 | 0 | 0 | 0 | 0 | 0 | 0 | 0 | 0 | 0 | 0 |
| Pass-by Trips [veh/h] | 0 | 0 | 0 | 0 | 0 | 0 | 0 | 0 | 0 | 0 | 0 | 0 |
| Existing Site Adjustment Volume [veh/h] | 0 | 0 | 0 | 0 | 0 | 0 | 0 | 0 | 0 | 0 | 0 | 0 |
| Other Volume [veh/h] | 0 | 0 | 0 | 0 | 0 | 0 | 0 | 0 | 0 | 0 | 0 | 0 |
| Right-Turn on Red Volume [veh/h] | 0 | 0 | 0 | 0 | 0 | 0 | 0 | 0 | 0 | 0 | 0 | 0 |
| Total Hourly Volume [veh/h] | 45 | 806 | 55 | 81 | 719 | 30 | 43 | 108 | 72 | 150 | 68 | 43 |
| Peak Hour Factor | 0.8589 | 0.8890 | 0.8890 | 0.8890 | 0.8890 | 0.8890 | 0.8890 | 0.8890 | 0.8890 | 0.8890 | 0.8890 | 0.8890 |
| Other Adjustment Factor | 1.0000 | 1.0000 | 1.0000 | 1.0000 | 1.0000 | 1.0000 | 1.0000 | 1.0000 | 1.0000 | 1.0000 | 1.0000 | 1.0000 |
| Total 15-Minute Volume [veh/h] | 13 | 227 | 15 | 23 | 202 | 8 | 12 | 30 | 20 | 42 | 19 | 12 |
| Total Analysis Volume [veh/h] | 52 | 907 | 62 | 91 | 809 | 34 | 48 | 121 | 81 | 169 | 76 | 48 |
| Presence of On-Street Parking | No | | No | No | | No | No | | No | No | | No |
| On-Street Parking Maneuver Rate [/h] | 0 | 0 | 0 | 0 | 0 | 0 | 0 | 0 | 0 | 0 | 0 | 0 |
| Local Bus Stopping Rate [/h] | 0 | 0 | 0 | 0 | 0 | 0 | 0 | 0 | 0 | 0 | 0 | 0 |
| Pedestrian Volume [ped/h] | 0 | | | 0 | | | 0 | | | 0 | | |
| Bicycle Volume [bicycles/h] | 0 | | | 0 | | | 0 | | | 0 | | |

**Intersection Settings**

| | |
|---|---|
| Located in CBD | No |
| Signal Coordination Group | 2 - NS - Cedar |
| Cycle Length [s] | 120 |
| Coordination Type | Time of Day Pattern Coordinated |
| Actuation Type | Fully actuated |
| Offset [s] | 36.0 |
| Offset Reference | LagFO |
| Permissive Mode | SingleBand |
| Lost time [s] | 16.00 |

**Phasing & Timing**

| Control Type | Protecte | Permiss | Permiss | Protecte | Permiss | Permiss | Protecte | Permiss | Permiss | Protecte | Permiss | Overlap |
|---|---|---|---|---|---|---|---|---|---|---|---|---|
| Signal group | 5 | 2 | 0 | 1 | 6 | 0 | 3 | 8 | 0 | 7 | 4 | 4 |
| Auxiliary Signal Groups | | | | | | | | | | | | 1,4 |
| Lead / Lag | Lead | - | - | Lead | - | - | Lead | - | - | Lead | - | - |
| Minimum Green [s] | 5 | 5 | 0 | 5 | 5 | 0 | 5 | 5 | 0 | 5 | 5 | 5 |
| Maximum Green [s] | 30 | 30 | 0 | 30 | 30 | 0 | 30 | 30 | 0 | 30 | 30 | 30 |
| Amber [s] | 4.8 | 4.8 | 0.0 | 4.8 | 4.8 | 0.0 | 5.2 | 5.2 | 0.0 | 5.2 | 5.2 | 5.2 |
| All red [s] | 1.0 | 1.0 | 0.0 | 1.0 | 1.0 | 0.0 | 1.0 | 1.0 | 0.0 | 1.0 | 1.0 | 1.0 |
| Split [s] | 11 | 49 | 0 | 11 | 49 | 0 | 15 | 40 | 0 | 20 | 45 | 45 |
| Vehicle Extension [s] | 3.0 | 3.0 | 0.0 | 3.0 | 3.0 | 0.0 | 3.0 | 3.0 | 0.0 | 3.0 | 3.0 | 3.0 |
| Walk [s] | 0 | 7 | 0 | 0 | 7 | 0 | 0 | 7 | 0 | 0 | 7 | 7 |
| Pedestrian Clearance [s] | 0 | 31 | 0 | 0 | 20 | 0 | 0 | 26 | 0 | 0 | 31 | 31 |
| I1, Start-Up Lost Time [s] | 2.0 | 2.0 | 0.0 | 2.0 | 2.0 | 0.0 | 2.0 | 2.0 | 0.0 | 2.0 | 2.0 | 2.0 |
| I2, Clearance Lost Time [s] | 3.8 | 3.8 | 0.0 | 3.8 | 3.8 | 0.0 | 4.2 | 4.2 | 0.0 | 4.2 | 4.2 | 4.2 |
| Minimum Recall | No | No | | No | No | | No | No | | No | No | No |
| Maximum Recall | No | No | | No | No | | No | No | | No | No | No |
| Pedestrian Recall | No | No | | No | No | | No | No | | No | No | No |
| Detector Location [ft] | 0.0 | 0.0 | 0.0 | 0.0 | 0.0 | 0.0 | 0.0 | 0.0 | 0.0 | 0.0 | 0.0 | 0.0 |
| Detector Length [ft] | 0.0 | 0.0 | 0.0 | 0.0 | 0.0 | 0.0 | 0.0 | 0.0 | 0.0 | 0.0 | 0.0 | 0.0 |
| I, Upstream Filtering Factor | 1.00 | 1.00 | 1.00 | 1.00 | 1.00 | 1.00 | 1.00 | 1.00 | 1.00 | 1.00 | 1.00 | 1.00 |

**Exclusive Pedestrian Phase**

| | |
|---|---|
| Pedestrian Signal Group | 0 |
| Pedestrian Walk [s] | 0 |
| Pedestrian Clearance [s] | 0 |

**Lane Group Calculations**

| Lane Group | L | C | C | L | C | C | L | C | L | C | R |
|---|---|---|---|---|---|---|---|---|---|---|---|
| L, Total Lost Time per Cycle [s] | 5.80 | 5.80 | 5.80 | 5.80 | 5.80 | 5.80 | 6.20 | 6.20 | 6.20 | 6.20 | 5.80 |
| l1_p, Permitted Start-Up Lost Time [s] | 0.00 | 0.00 | 0.00 | 0.00 | 0.00 | 0.00 | 0.00 | 0.00 | 0.00 | 0.00 | 0.00 |
| l2, Clearance Lost Time [s] | 0.00 | 3.80 | 3.80 | 0.00 | 3.80 | 3.80 | 4.20 | 4.20 | 4.20 | 4.20 | 0.00 |
| g_i, Effective Green Time [s] | 73 | 63 | 63 | 73 | 63 | 63 | 4 | 16 | 13 | 25 | 35 |
| g / C, Green / Cycle | 0.60 | 0.52 | 0.52 | 0.60 | 0.52 | 0.52 | 0.04 | 0.13 | 0.11 | 0.21 | 0.29 |
| (v / s)_i Volume / Saturation Flow Rate | 0.07 | 0.27 | 0.27 | 0.13 | 0.23 | 0.23 | 0.03 | 0.12 | 0.10 | 0.04 | 0.03 |
| s, saturation flow rate [veh/h] | 753 | 1810 | 1769 | 688 | 1810 | 1784 | 1774 | 1740 | 1774 | 1863 | 1583 |
| c, Capacity [veh/h] | 471 | 943 | 922 | 425 | 941 | 928 | 63 | 233 | 196 | 390 | 467 |
| d1, Uniform Delay [s] | 5.89 | 11.15 | 11.15 | 6.78 | 10.76 | 10.76 | 57.39 | 50.93 | 52.49 | 39.15 | 30.78 |
| k, delay calibration | 0.50 | 0.50 | 0.50 | 0.50 | 0.50 | 0.50 | 0.11 | 0.11 | 0.21 | 0.11 | 0.11 |
| I, Upstream Filtering Factor | 1.00 | 1.00 | 1.00 | 1.00 | 1.00 | 1.00 | 1.00 | 1.00 | 1.00 | 1.00 | 1.00 |
| d2, Incremental Delay [s] | 0.47 | 2.05 | 2.09 | 1.15 | 1.56 | 1.58 | 16.68 | 9.29 | 18.66 | 0.24 | 0.10 |
| d3, Initial Queue Delay [s] | 0.00 | 0.00 | 0.00 | 0.00 | 0.00 | 0.00 | 0.00 | 0.00 | 0.00 | 0.00 | 0.00 |
| Rp, platoon ratio | 1.33 | 1.33 | 1.33 | 1.33 | 1.33 | 1.33 | 1.00 | 1.00 | 1.00 | 1.00 | 1.00 |
| PF, progression factor | 1.00 | 1.00 | 1.00 | 1.00 | 1.00 | 1.00 | 1.00 | 1.00 | 1.00 | 1.00 | 1.00 |

**Lane Group Results**

| | | | | | | | | | | | |
|---|---|---|---|---|---|---|---|---|---|---|---|
| X, volume / capacity | 0.11 | 0.52 | 0.52 | 0.21 | 0.45 | 0.45 | 0.76 | 0.87 | 0.86 | 0.20 | 0.10 |
| d, Delay for Lane Group [s/veh] | 6.37 | 13.19 | 13.24 | 7.93 | 12.32 | 12.35 | 74.07 | 60.22 | 71.14 | 39.39 | 30.88 |
| Lane Group LOS | A | B | B | A | B | B | E | E | E | D | C |
| Critical Lane Group | No | No | Yes | Yes | No | No | No | Yes | Yes | No | No |
| 50th-Percentile Queue Length [veh] | 0.31 | 5.19 | 5.09 | 0.58 | 4.36 | 4.30 | 1.69 | 6.34 | 5.85 | 1.82 | 0.99 |
| 50th-Percentile Queue Length [ft] | 7.80 | 129.84 | 127.25 | 14.46 | 108.92 | 107.53 | 42.34 | 158.39 | 146.27 | 45.38 | 24.73 |
| 95th-Percentile Queue Length [veh] | 0.56 | 8.93 | 8.79 | 1.04 | 7.78 | 7.70 | 3.05 | 10.46 | 9.82 | 3.27 | 1.78 |
| 95th-Percentile Queue Length [ft] | 14.04 | 223.28 | 219.75 | 26.03 | 194.50 | 192.56 | 76.20 | 261.59 | 245.44 | 81.69 | 44.52 |

**Movement, Approach, & Intersection Results**

| | | | | | | | | | | | | |
|---|---|---|---|---|---|---|---|---|---|---|---|---|
| d_M, Delay for Movement [s/veh] | 6.37 | 13.21 | 13.24 | 7.93 | 12.33 | 12.35 | 74.07 | 60.22 | 60.22 | 71.14 | 39.39 | 30.88 |
| Movement LOS | A | B | B | A | B | B | E | E | E | E | D | C |
| d_A, Approach Delay [s/veh] | 12.87 | | | 11.91 | | | 62.88 | | | 56.31 | | |
| Approach LOS | B | | | B | | | E | | | E | | |
| d_I, Intersection Delay [s/veh] | 22.61 | | | | | | | | | | | |
| Intersection LOS | C | | | | | | | | | | | |
| Intersection V/C | 0.573 | | | | | | | | | | | |

## Sequence

| | | | | | | | | | | | | | | | | |
|---|---|---|---|---|---|---|---|---|---|---|---|---|---|---|---|---|
| Ring 1 | 1 | 2 | 3 | 4 | - | - | - | - | - | - | - | - | - | - | - | - |
| Ring 2 | 5 | 6 | 7 | 8 | - | - | - | - | - | - | - | - | - | - | - | - |
| Ring 3 | - | - | - | - | - | - | - | - | - | - | - | - | - | - | - | - |
| Ring 4 | - | - | - | - | - | - | - | - | - | - | - | - | - | - | - | - |

**Intersection Level Of Service Report**
**Intersection 1: Sierra Ave (NS) / San Bernardino Ave (EW)**

| | | | |
|---|---|---|---|
| Control Type: | Signalized | Delay (sec / veh): | 39.3 |
| Analysis Method: | HCM 2010 | Level Of Service: | D |
| Analysis Period: | 15 minutes | Volume to Capacity (v/c): | 0.781 |

**Intersection Setup**

| Name | Sierra Avenue | | | Sierra Avenue | | | San Bernardino Avenue | | | San Bernardino Avenue | | |
|---|---|---|---|---|---|---|---|---|---|---|---|---|
| Approach | Northbound | | | Southbound | | | Eastbound | | | Westbound | | |
| Lane Configuration | | | | | | | | | | | | |
| Turning Movement | Left | Thru | Right | Left | Thru | Right | Left | Thru | Right | Left | Thru | Right |
| Lane Width [ft] | 12.00 | 12.00 | 12.00 | 12.00 | 12.00 | 12.00 | 12.00 | 12.00 | 12.00 | 12.00 | 12.00 | 12.00 |
| No. of Lanes in Pocket | 1 | 0 | 1 | 1 | 0 | 0 | 1 | 0 | 0 | 1 | 0 | 0 |
| Pocket Length [ft] | 140.00 | 100.00 | 140.00 | 150.00 | 100.00 | 100.00 | 150.00 | 100.00 | 100.00 | 240.00 | 100.00 | 100.00 |
| Speed [mph] | 35.00 | | | 35.00 | | | 35.00 | | | 30.00 | | |
| Grade [%] | 0.00 | | | 0.00 | | | 0.00 | | | 0.00 | | |
| Crosswalk | Yes | | | Yes | | | Yes | | | Yes | | |

**volumes**

| Name | Sierra Avenue | | | Sierra Avenue | | | San Bernardino Avenue | | | San Bernardino Avenue | | |
|---|---|---|---|---|---|---|---|---|---|---|---|---|
| Base Volume Input [veh/h] | 228 | 1051 | 251 | 46 | 871 | 51 | 72 | 243 | 145 | 192 | 174 | 37 |
| Base Volume Adjustment Factor | 1.0000 | 1.0000 | 1.0000 | 1.0000 | 1.0000 | 1.0000 | 1.0000 | 1.0000 | 1.0000 | 1.0000 | 1.0000 | 1.0000 |
| Heavy Vehicles Percentage [%] | 2.00 | 2.00 | 2.00 | 2.00 | 2.00 | 2.00 | 2.00 | 2.00 | 2.00 | 2.00 | 2.00 | 2.00 |
| Growth Rate | 1.00 | 1.00 | 1.00 | 1.00 | 1.00 | 1.00 | 1.00 | 1.00 | 1.00 | 1.00 | 1.00 | 1.00 |
| In-Process Volume [veh/h] | 0 | 0 | 0 | 0 | 0 | 0 | 0 | 0 | 0 | 0 | 0 | 0 |
| Site-Generated Trips [veh/h] | 16 | 16 | 0 | 0 | 11 | 0 | 0 | 0 | 11 | 0 | 0 | 0 |
| Diverted Trips [veh/h] | 0 | 0 | 0 | 0 | 0 | 0 | 0 | 0 | 0 | 0 | 0 | 0 |
| Pass-by Trips [veh/h] | 0 | 0 | 0 | 0 | 0 | 0 | 0 | 0 | 0 | 0 | 0 | 0 |
| Existing Site Adjustment Volume [veh/h] | 0 | 0 | 0 | 0 | 0 | 0 | 0 | 0 | 0 | 0 | 0 | 0 |
| Other Volume [veh/h] | 0 | 0 | 0 | 0 | 0 | 0 | 0 | 0 | 0 | 0 | 0 | 0 |
| Right-Turn on Red Volume [veh/h] | 0 | 0 | 0 | 0 | 0 | 0 | 0 | 0 | 0 | 0 | 0 | 0 |
| Total Hourly Volume [veh/h] | 244 | 1067 | 251 | 46 | 882 | 51 | 72 | 243 | 156 | 192 | 174 | 37 |
| Peak Hour Factor | 0.9020 | 0.9020 | 0.9020 | 0.9020 | 0.9200 | 0.9020 | 0.9020 | 0.9020 | 0.9020 | 0.9020 | 0.9020 | 0.9020 |
| Other Adjustment Factor | 1.0000 | 1.0000 | 1.0000 | 1.0000 | 1.0000 | 1.0000 | 1.0000 | 1.0000 | 1.0000 | 1.0000 | 1.0000 | 1.0000 |
| Total 15-Minute Volume [veh/h] | 68 | 296 | 70 | 13 | 240 | 14 | 20 | 67 | 43 | 53 | 48 | 10 |
| Total Analysis Volume [veh/h] | 271 | 1183 | 278 | 51 | 959 | 57 | 80 | 269 | 173 | 213 | 193 | 41 |
| Presence of On-Street Parking | No | | No | No | | No | No | | No | No | | No |
| On-Street Parking Maneuver Rate [/h] | 0 | 0 | 0 | 0 | 0 | 0 | 0 | 0 | 0 | 0 | 0 | 0 |
| Local Bus Stopping Rate [/h] | 0 | 0 | 0 | 0 | 0 | 0 | 0 | 0 | 0 | 0 | 0 | 0 |
| Pedestrian Volume [ped/h] | 0 | | | 0 | | | 0 | | | 0 | | |
| Bicycle Volume [bicycles/h] | 0 | | | 0 | | | 0 | | | 0 | | |

**Intersection Settings**

| | |
|---|---|
| Located in CBD | No |
| Signal Coordination Group | 1 - NS - Sierra |
| Cycle Length [s] | 120 |
| Coordination Type | Time of Day Pattern Coordinated |
| Actuation Type | Fully actuated |
| Offset [s] | 0.0 |
| Offset Reference | LagFO |
| Permissive Mode | SingleBand |
| Lost time [s] | 16.00 |

**Phasing & Timing**

| Control Type | Protecte | Permiss | Permiss | Protecte | Permiss | Permiss | Protecte | Permiss | Permiss | Protecte | Permiss | Permiss |
|---|---|---|---|---|---|---|---|---|---|---|---|---|
| Signal group | 5 | 2 | 0 | 1 | 6 | 0 | 3 | 8 | 0 | 7 | 4 | 0 |
| Auxiliary Signal Groups | | | | | | | | | | | | |
| Lead / Lag | Lead | - | - | Lead | - | - | Lead | - | - | Lead | - | - |
| Minimum Green [s] | 5 | 5 | 0 | 5 | 5 | 0 | 5 | 5 | 0 | 5 | 5 | 0 |
| Maximum Green [s] | 30 | 30 | 0 | 30 | 30 | 0 | 30 | 30 | 0 | 30 | 30 | 0 |
| Amber [s] | 4.1 | 4.1 | 0.0 | 4.1 | 4.1 | 0.0 | 4.1 | 4.1 | 0.0 | 3.7 | 3.7 | 0.0 |
| All red [s] | 1.0 | 1.0 | 0.0 | 1.0 | 1.0 | 0.0 | 1.0 | 1.0 | 0.0 | 1.0 | 1.0 | 0.0 |
| Split [s] | 22 | 50 | 0 | 11 | 39 | 0 | 18 | 41 | 0 | 18 | 41 | 0 |
| Vehicle Extension [s] | 3.0 | 3.0 | 0.0 | 3.0 | 3.0 | 0.0 | 3.0 | 3.0 | 0.0 | 3.0 | 3.0 | 0.0 |
| Walk [s] | 0 | 7 | 0 | 0 | 7 | 0 | 0 | 7 | 0 | 0 | 7 | 0 |
| Pedestrian Clearance [s] | 0 | 22 | 0 | 0 | 23 | 0 | 0 | 28 | 0 | 0 | 25 | 0 |
| I1, Start-Up Lost Time [s] | 2.0 | 2.0 | 0.0 | 2.0 | 2.0 | 0.0 | 2.0 | 2.0 | 0.0 | 2.0 | 2.0 | 0.0 |
| I2, Clearance Lost Time [s] | 3.1 | 3.1 | 0.0 | 3.1 | 3.1 | 0.0 | 3.1 | 3.1 | 0.0 | 2.7 | 2.7 | 0.0 |
| Minimum Recall | No | No | | No | No | | No | No | | No | No | |
| Maximum Recall | No | No | | No | No | | No | No | | No | No | |
| Pedestrian Recall | No | No | | No | No | | No | No | | No | No | |
| Detector Location [ft] | 0.0 | 0.0 | 0.0 | 0.0 | 0.0 | 0.0 | 0.0 | 0.0 | 0.0 | 0.0 | 0.0 | 0.0 |
| Detector Length [ft] | 0.0 | 0.0 | 0.0 | 0.0 | 0.0 | 0.0 | 0.0 | 0.0 | 0.0 | 0.0 | 0.0 | 0.0 |
| I, Upstream Filtering Factor | 1.00 | 1.00 | 1.00 | 1.00 | 1.00 | 1.00 | 1.00 | 1.00 | 1.00 | 1.00 | 1.00 | 1.00 |

**Exclusive Pedestrian Phase**

| | |
|---|---|
| Pedestrian Signal Group | 0 |
| Pedestrian Walk [s] | 0 |
| Pedestrian Clearance [s] | 0 |

**Lane Group Calculations**

| Lane Group | L | C | R | L | C | C | L | C | C | L | C | C |
|---|---|---|---|---|---|---|---|---|---|---|---|---|
| L, Total Lost Time per Cycle [s] | 5.10 | 5.10 | 5.10 | 5.10 | 5.10 | 5.10 | 5.10 | 5.10 | 5.10 | 4.70 | 4.70 | 4.70 |
| l1_p, Permitted Start-Up Lost Time [s] | 0.00 | 0.00 | 0.00 | 0.00 | 0.00 | 0.00 | 0.00 | 0.00 | 0.00 | 0.00 | 0.00 | 0.00 |
| l2, Clearance Lost Time [s] | 3.10 | 3.10 | 3.10 | 3.10 | 3.10 | 3.10 | 3.10 | 3.10 | 3.10 | 2.70 | 2.70 | 2.70 |
| g_i, Effective Green Time [s] | 17 | 64 | 64 | 4 | 52 | 52 | 7 | 18 | 18 | 13 | 24 | 24 |
| g / C, Green / Cycle | 0.14 | 0.53 | 0.53 | 0.04 | 0.43 | 0.43 | 0.06 | 0.15 | 0.15 | 0.11 | 0.20 | 0.20 |
| (v / s)_i Volume / Saturation Flow Rate | 0.15 | 0.33 | 0.18 | 0.03 | 0.28 | 0.28 | 0.05 | 0.13 | 0.13 | 0.12 | 0.06 | 0.07 |
| s, saturation flow rate [veh/h] | 1774 | 3547 | 1583 | 1774 | 1863 | 1826 | 1774 | 1863 | 1625 | 1774 | 1863 | 1752 |
| c, Capacity [veh/h] | 250 | 1893 | 845 | 67 | 801 | 786 | 103 | 281 | 245 | 197 | 380 | 357 |
| d1, Uniform Delay [s] | 48.74 | 11.07 | 9.22 | 56.50 | 19.34 | 19.34 | 55.79 | 49.49 | 49.69 | 53.36 | 40.65 | 40.70 |
| k, delay calibration | 0.44 | 0.50 | 0.50 | 0.11 | 0.50 | 0.50 | 0.11 | 0.11 | 0.11 | 0.42 | 0.11 | 0.11 |
| I, Upstream Filtering Factor | 1.00 | 1.00 | 1.00 | 1.00 | 1.00 | 1.00 | 1.00 | 1.00 | 1.00 | 1.00 | 1.00 | 1.00 |
| d2, Incremental Delay [s] | 76.67 | 1.57 | 1.04 | 16.28 | 3.90 | 3.98 | 11.76 | 6.23 | 8.19 | 81.37 | 0.47 | 0.51 |
| d3, Initial Queue Delay [s] | 0.00 | 0.00 | 0.00 | 0.00 | 0.00 | 0.00 | 0.00 | 0.00 | 0.00 | 0.00 | 0.00 | 0.00 |
| Rp, platoon ratio | 1.33 | 1.33 | 1.33 | 1.33 | 1.33 | 1.33 | 1.00 | 1.00 | 1.00 | 1.00 | 1.00 | 1.00 |
| PF, progression factor | 1.00 | 1.00 | 1.00 | 1.00 | 1.00 | 1.00 | 1.00 | 1.00 | 1.00 | 1.00 | 1.00 | 1.00 |

**Lane Group Results**

| | | | | | | | | | | | | |
|---|---|---|---|---|---|---|---|---|---|---|---|---|
| X, volume / capacity | 1.08 | 0.62 | 0.33 | 0.76 | 0.64 | 0.64 | 0.78 | 0.83 | 0.85 | 1.08 | 0.31 | 0.32 |
| d, Delay for Lane Group [s/veh] | 125.41 | 12.64 | 10.26 | 72.78 | 23.24 | 23.32 | 67.54 | 55.72 | 57.88 | 134.72 | 41.12 | 41.21 |
| Lane Group LOS | F | B | B | E | C | C | E | E | E | F | D | D |
| Critical Lane Group | Yes | No | No | No | No | Yes | No | No | Yes | Yes | No | No |
| 50th-Percentile Queue Length [veh] | 12.41 | 6.20 | 2.63 | 1.80 | 9.01 | 8.86 | 2.71 | 7.20 | 6.61 | 10.41 | 3.07 | 2.95 |
| 50th-Percentile Queue Length [ft] | 310.17 | 155.04 | 65.83 | 45.11 | 225.31 | 221.38 | 67.70 | 180.01 | 165.13 | 260.20 | 76.81 | 73.69 |
| 95th-Percentile Queue Length [veh] | 18.85 | 10.29 | 4.74 | 3.25 | 13.94 | 13.74 | 4.87 | 11.60 | 10.82 | 16.19 | 5.53 | 5.31 |
| 95th-Percentile Queue Length [ft] | 471.21 | 257.15 | 118.49 | 81.19 | 348.39 | 343.38 | 121.86 | 290.02 | 270.50 | 404.87 | 138.25 | 132.64 |

**Movement, Approach, & Intersection Results**

| | | | | | | | | | | | | |
|---|---|---|---|---|---|---|---|---|---|---|---|---|
| d_M, Delay for Movement [s/veh] | 125.41 | 12.64 | 10.26 | 72.78 | 23.28 | 23.32 | 67.54 | 56.01 | 57.88 | 134.72 | 41.15 | 41.21 |
| Movement LOS | F | B | B | E | C | C | E | E | E | F | D | D |
| d_A, Approach Delay [s/veh] | 29.90 | | | 25.64 | | | 58.40 | | | 85.75 | | |
| Approach LOS | C | | | C | | | E | | | F | | |
| d_I, Intersection Delay [s/veh] | 39.27 | | | | | | | | | | | |
| Intersection LOS | D | | | | | | | | | | | |
| Intersection V/C | 0.781 | | | | | | | | | | | |

## Sequence

| | | | | | | | | | | | | | | | | |
|---|---|---|---|---|---|---|---|---|---|---|---|---|---|---|---|---|
| Ring 1 | 1 | 2 | 3 | 4 | - | - | - | - | - | - | - | - | - | - | - | - |
| Ring 2 | 5 | 6 | 7 | 8 | - | - | - | - | - | - | - | - | - | - | - | - |
| Ring 3 | - | - | - | - | - | - | - | - | - | - | - | - | - | - | - | - |
| Ring 4 | - | - | - | - | - | - | - | - | - | - | - | - | - | - | - | - |

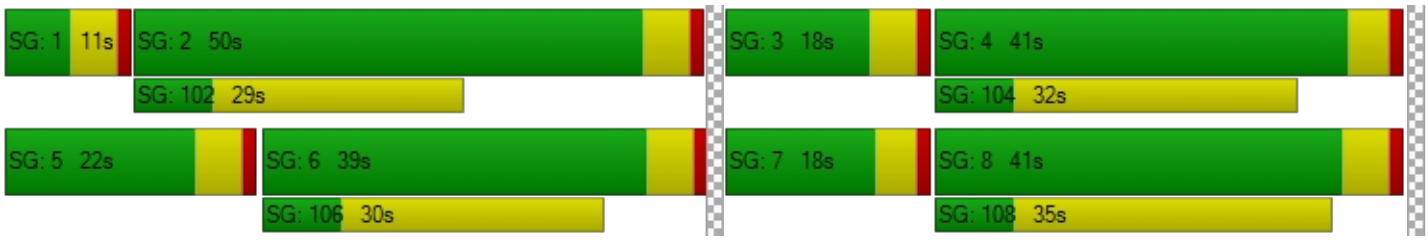

**Intersection Level Of Service Report**
**Intersection 2: Sierra Ave (NS) / Valley Blvd (EW)**

| | | | |
|---|---|---|---|
| Control Type: | Signalized | Delay (sec / veh): | 38.1 |
| Analysis Method: | HCM 2010 | Level Of Service: | D |
| Analysis Period: | 15 minutes | Volume to Capacity (v/c): | 1.008 |

**Intersection Setup**

| Name | Sierra Avenue | | | Sierra Avenue | | | Valley Boulevard | | | Valley Boulevard | | |
|---|---|---|---|---|---|---|---|---|---|---|---|---|
| Approach | Northbound | | | Southbound | | | Eastbound | | | Westbound | | |
| Lane Configuration | | | | | | | | | | | | |
| Turning Movement | Left | Thru | Right | Left | Thru | Right | Left | Thru | Right | Left | Thru | Right |
| Lane Width [ft] | 12.00 | 12.00 | 12.00 | 12.00 | 12.00 | 12.00 | 12.00 | 12.00 | 12.00 | 12.00 | 12.00 | 12.00 |
| No. of Lanes in Pocket | 2 | 0 | 0 | 2 | 0 | 0 | 2 | 0 | 0 | 2 | 0 | 0 |
| Pocket Length [ft] | 370.00 | 100.00 | 100.00 | 165.00 | 100.00 | 100.00 | 260.00 | 100.00 | 100.00 | 355.00 | 100.00 | 100.00 |
| Speed [mph] | 35.00 | | | 35.00 | | | 40.00 | | | 40.00 | | |
| Grade [%] | 0.00 | | | 0.00 | | | 0.00 | | | 0.00 | | |
| Crosswalk | Yes | | | Yes | | | Yes | | | Yes | | |

**volumes**

| Name | Sierra Avenue | | | Sierra Avenue | | | Valley Boulevard | | | Valley Boulevard | | |
|---|---|---|---|---|---|---|---|---|---|---|---|---|
| Base Volume Input [veh/h] | 315 | 1188 | 907 | 188 | 1325 | 172 | 194 | 486 | 330 | 675 | 492 | 260 |
| Base Volume Adjustment Factor | 1.0000 | 1.0000 | 1.0000 | 1.0000 | 1.0000 | 1.0000 | 1.0000 | 1.0000 | 1.0000 | 1.0000 | 1.0000 | 1.0000 |
| Heavy Vehicles Percentage [%] | 2.00 | 2.00 | 2.00 | 2.00 | 2.00 | 2.00 | 4.00 | 4.00 | 4.00 | 4.00 | 4.00 | 4.00 |
| Growth Rate | 1.00 | 1.00 | 1.00 | 1.00 | 1.00 | 1.00 | 1.00 | 1.00 | 1.00 | 1.00 | 1.00 | 1.00 |
| In-Process Volume [veh/h] | 0 | 0 | 0 | 0 | 0 | 0 | 0 | 0 | 0 | 0 | 0 | 0 |
| Site-Generated Trips [veh/h] | 0 | 0 | 32 | 31 | 0 | 0 | 0 | 4 | 0 | 40 | 3 | 46 |
| Diverted Trips [veh/h] | 0 | 0 | 0 | 0 | 0 | 0 | 0 | 0 | 0 | 0 | 0 | 0 |
| Pass-by Trips [veh/h] | 0 | 0 | 0 | 0 | 0 | 0 | 0 | 0 | 0 | 0 | 0 | 0 |
| Existing Site Adjustment Volume [veh/h] | 0 | 0 | 0 | 0 | 0 | 0 | 0 | 0 | 0 | 0 | 0 | 0 |
| Other Volume [veh/h] | 0 | 0 | 0 | 0 | 0 | 0 | 0 | 0 | 0 | 0 | 0 | 0 |
| Right-Turn on Red Volume [veh/h] | 0 | 0 | 0 | 0 | 0 | 0 | 0 | 0 | 0 | 0 | 0 | 0 |
| Total Hourly Volume [veh/h] | 315 | 1188 | 939 | 219 | 1325 | 172 | 194 | 490 | 330 | 715 | 495 | 306 |
| Peak Hour Factor | 0.9720 | 0.9720 | 0.9720 | 0.9720 | 0.9720 | 0.9720 | 0.9720 | 0.9720 | 0.9720 | 0.9720 | 0.9720 | 0.9720 |
| Other Adjustment Factor | 1.0000 | 1.0000 | 1.0000 | 1.0000 | 1.0000 | 1.0000 | 1.0000 | 1.0000 | 1.0000 | 1.0000 | 1.0000 | 1.0000 |
| Total 15-Minute Volume [veh/h] | 81 | 306 | 242 | 56 | 341 | 44 | 50 | 126 | 85 | 184 | 127 | 79 |
| Total Analysis Volume [veh/h] | 324 | 1222 | 966 | 225 | 1363 | 177 | 200 | 504 | 340 | 736 | 509 | 315 |
| Presence of On-Street Parking | No | | No | No | | No | No | | No | No | | No |
| On-Street Parking Maneuver Rate [/h] | 0 | 0 | 0 | 0 | 0 | 0 | 0 | 0 | 0 | 0 | 0 | 0 |
| Local Bus Stopping Rate [/h] | 0 | 0 | 0 | 0 | 0 | 0 | 0 | 0 | 0 | 0 | 0 | 0 |
| Pedestrian Volume [ped/h] | 0 | | | 0 | | | 0 | | | 0 | | |
| Bicycle Volume [bicycles/h] | 0 | | | 0 | | | 0 | | | 0 | | |

**Intersection Settings**

| | |
|---|---|
| Located in CBD | No |
| Signal Coordination Group | 1 - NS - Sierra |
| Cycle Length [s] | 120 |
| Coordination Type | Time of Day Pattern Coordinated |
| Actuation Type | Fully actuated |
| Offset [s] | 69.0 |
| Offset Reference | LagFO |
| Permissive Mode | SingleBand |
| Lost time [s] | 16.00 |

**Phasing & Timing**

| Control Type | Protecte | Permiss | Overlap | Protecte | Permiss | Permiss | Protecte | Permiss | Overlap | Protecte | Permiss | Overlap |
|---|---|---|---|---|---|---|---|---|---|---|---|---|
| Signal group | 5 | 2 | 2 | 1 | 6 | 0 | 3 | 8 | 8 | 7 | 4 | 4 |
| Auxiliary Signal Groups | | | 2,7 | | | | | | 5,8 | | | 1,4 |
| Lead / Lag | Lead | - | - | Lead | - | - | Lead | - | - | Lead | - | - |
| Minimum Green [s] | 5 | 5 | 5 | 5 | 5 | 0 | 5 | 5 | 5 | 5 | 5 | 5 |
| Maximum Green [s] | 30 | 30 | 30 | 30 | 30 | 0 | 30 | 30 | 30 | 30 | 30 | 30 |
| Amber [s] | 4.1 | 4.1 | 4.1 | 4.1 | 4.1 | 0.0 | 4.4 | 4.4 | 4.4 | 4.4 | 4.4 | 4.4 |
| All red [s] | 1.0 | 1.0 | 1.0 | 1.0 | 1.0 | 0.0 | 1.0 | 1.0 | 1.0 | 1.0 | 1.0 | 1.0 |
| Split [s] | 18 | 53 | 53 | 13 | 48 | 0 | 15 | 22 | 22 | 32 | 39 | 39 |
| Vehicle Extension [s] | 3.0 | 3.0 | 3.0 | 3.0 | 3.0 | 0.0 | 3.0 | 3.0 | 3.0 | 3.0 | 3.0 | 3.0 |
| Walk [s] | 0 | 7 | 7 | 0 | 7 | 0 | 0 | 5 | 5 | 0 | 5 | 5 |
| Pedestrian Clearance [s] | 0 | 24 | 24 | 0 | 26 | 0 | 0 | 10 | 10 | 0 | 10 | 10 |
| I1, Start-Up Lost Time [s] | 2.0 | 2.0 | 2.0 | 2.0 | 2.0 | 0.0 | 2.0 | 2.0 | 2.0 | 2.0 | 2.0 | 2.0 |
| I2, Clearance Lost Time [s] | 3.1 | 3.1 | 3.1 | 3.1 | 3.1 | 0.0 | 3.4 | 3.4 | 3.4 | 3.4 | 3.4 | 3.4 |
| Minimum Recall | No | No | No | No | No | | No | No | No | No | No | No |
| Maximum Recall | No | No | No | No | No | | No | No | No | No | No | No |
| Pedestrian Recall | No | No | No | No | No | | No | No | No | No | No | No |
| Detector Location [ft] | 0.0 | 0.0 | 0.0 | 0.0 | 0.0 | 0.0 | 0.0 | 0.0 | 0.0 | 0.0 | 0.0 | 0.0 |
| Detector Length [ft] | 0.0 | 0.0 | 0.0 | 0.0 | 0.0 | 0.0 | 0.0 | 0.0 | 0.0 | 0.0 | 0.0 | 0.0 |
| I, Upstream Filtering Factor | 1.00 | 1.00 | 1.00 | 1.00 | 1.00 | 1.00 | 1.00 | 1.00 | 1.00 | 1.00 | 1.00 | 1.00 |

**Exclusive Pedestrian Phase**

| | |
|---|---|
| Pedestrian Signal Group | 0 |
| Pedestrian Walk [s] | 0 |
| Pedestrian Clearance [s] | 0 |

**Lane Group Calculations**

| Lane Group | L | C | R | L | C | C | L | C | R | L | C | R |
|---|---|---|---|---|---|---|---|---|---|---|---|---|
| L, Total Lost Time per Cycle [s] | 5.10 | 5.10 | 5.40 | 5.10 | 5.10 | 5.10 | 5.40 | 5.40 | 5.10 | 5.40 | 5.40 | 5.10 |
| l1_p, Permitted Start-Up Lost Time [s] | 0.00 | 0.00 | 0.00 | 0.00 | 0.00 | 0.00 | 0.00 | 0.00 | 0.00 | 0.00 | 0.00 | 0.00 |
| l2, Clearance Lost Time [s] | 3.10 | 3.10 | 0.00 | 3.10 | 3.10 | 3.10 | 3.40 | 3.40 | 0.00 | 3.40 | 3.40 | 0.00 |
| g_i, Effective Green Time [s] | 13 | 48 | 80 | 8 | 43 | 43 | 9 | 17 | 35 | 27 | 34 | 48 |
| g / C, Green / Cycle | 0.11 | 0.40 | 0.66 | 0.07 | 0.36 | 0.36 | 0.07 | 0.14 | 0.29 | 0.22 | 0.29 | 0.40 |
| (v / s)_i Volume / Saturation Flow Rate | 0.09 | 0.33 | 0.61 | 0.06 | 0.28 | 0.28 | 0.06 | 0.14 | 0.22 | 0.21 | 0.14 | 0.20 |
| s, saturation flow rate [veh/h] | 3548 | 3725 | 1583 | 3548 | 3725 | 1752 | 3480 | 3654 | 1553 | 3480 | 3654 | 1553 |
| c, Capacity [veh/h] | 385 | 1486 | 1050 | 238 | 1333 | 627 | 258 | 502 | 452 | 771 | 1041 | 616 |
| d1, Uniform Delay [s] | 50.39 | 24.57 | 4.99 | 54.48 | 27.57 | 27.60 | 53.15 | 49.07 | 33.04 | 41.74 | 30.61 | 20.76 |
| k, delay calibration | 0.11 | 0.50 | 0.50 | 0.11 | 0.50 | 0.50 | 0.11 | 0.11 | 0.50 | 0.11 | 0.11 | 0.50 |
| I, Upstream Filtering Factor | 1.00 | 1.00 | 1.00 | 1.00 | 1.00 | 1.00 | 1.00 | 1.00 | 1.00 | 1.00 | 1.00 | 1.00 |
| d2, Incremental Delay [s] | 5.03 | 5.25 | 14.17 | 16.58 | 4.71 | 9.66 | 4.91 | 19.48 | 11.04 | 7.69 | 0.36 | 3.01 |
| d3, Initial Queue Delay [s] | 0.00 | 0.00 | 0.00 | 0.00 | 0.00 | 0.00 | 0.00 | 0.00 | 0.00 | 0.00 | 0.00 | 0.00 |
| Rp, platoon ratio | 1.33 | 1.33 | 1.33 | 1.33 | 1.33 | 1.33 | 1.33 | 1.33 | 1.33 | 1.33 | 1.33 | 1.33 |
| PF, progression factor | 1.00 | 1.00 | 1.00 | 1.00 | 1.00 | 1.00 | 1.00 | 1.00 | 1.00 | 1.00 | 1.00 | 1.00 |

**Lane Group Results**

| | | | | | | | | | | | | |
|---|---|---|---|---|---|---|---|---|---|---|---|---|
| X, volume / capacity | 0.84 | 0.82 | 0.92 | 0.94 | 0.79 | 0.79 | 0.77 | 1.00 | 0.75 | 0.95 | 0.49 | 0.51 |
| d, Delay for Lane Group [s/veh] | 55.42 | 29.82 | 19.16 | 71.05 | 32.28 | 37.26 | 58.05 | 68.55 | 44.08 | 49.43 | 30.97 | 23.78 |
| Lane Group LOS | E | C | B | E | C | D | E | F | D | D | C | C |
| Critical Lane Group | No | No | Yes | Yes | No | No | No | No | Yes | Yes | No | No |
| 50th-Percentile Queue Length [veh] | 4.81 | 13.52 | 7.54 | 3.83 | 12.00 | 12.19 | 3.02 | 8.36 | 9.06 | 10.59 | 5.19 | 5.41 |
| 50th-Percentile Queue Length [ft] | 120.21 | 338.06 | 188.50 | 95.75 | 299.97 | 304.75 | 75.45 | 209.08 | 226.39 | 264.68 | 129.78 | 135.33 |
| 95th-Percentile Queue Length [veh] | 8.40 | 19.55 | 12.04 | 6.89 | 17.68 | 17.92 | 5.43 | 13.13 | 13.99 | 15.92 | 8.93 | 9.23 |
| 95th-Percentile Queue Length [ft] | 210.12 | 488.83 | 301.09 | 172.36 | 441.99 | 447.90 | 135.81 | 328.15 | 349.77 | 398.08 | 223.19 | 230.72 |

**Movement, Approach, & Intersection Results**

| | | | | | | | | | | | | |
|---|---|---|---|---|---|---|---|---|---|---|---|---|
| d_M, Delay for Movement [s/veh] | 55.42 | 29.82 | 19.16 | 71.05 | 33.43 | 37.26 | 58.05 | 68.55 | 44.08 | 49.43 | 30.97 | 23.78 |
| Movement LOS | E | C | B | E | C | D | E | F | D | D | C | C |
| d_A, Approach Delay [s/veh] | 29.02 | | | 38.61 | | | 58.57 | | | 38.23 | | |
| Approach LOS | C | | | D | | | E | | | D | | |
| d_I, Intersection Delay [s/veh] | 38.05 | | | | | | | | | | | |
| Intersection LOS | D | | | | | | | | | | | |
| Intersection V/C | 1.008 | | | | | | | | | | | |

## Sequence

| | | | | | | | | | | | | | | | | |
|---|---|---|---|---|---|---|---|---|---|---|---|---|---|---|---|---|
| Ring 1 | 1 | 2 | 3 | 4 | - | - | - | - | - | - | - | - | - | - | - | - |
| Ring 2 | 5 | 6 | 7 | 8 | - | - | - | - | - | - | - | - | - | - | - | - |
| Ring 3 | - | - | - | - | - | - | - | - | - | - | - | - | - | - | - | - |
| Ring 4 | - | - | - | - | - | - | - | - | - | - | - | - | - | - | - | - |

**Intersection Level Of Service Report**
**Intersection 3: Sierra Ave (NS) / I-10 Ramps (EW)**

| | | | |
|---|---|---|---|
| Control Type: | Signalized | Delay (sec / veh): | 28.6 |
| Analysis Method: | HCM 2010 | Level Of Service: | C |
| Analysis Period: | 15 minutes | Volume to Capacity (v/c): | 0.826 |

**Intersection Setup**

| Name | Sierra Avenue | | | Sierra Avenue | | | I-10 Ramps | | | | | |
|---|---|---|---|---|---|---|---|---|---|---|---|---|
| Approach | Northbound | | | Southbound | | | Eastbound | | | Westbound | | |
| Lane Configuration | | | | | | | | | | | | |
| Turning Movement | Left | Thru | Right | Left | Thru | Right | Left | Thru | Right | Left | Thru | Right |
| Lane Width [ft] | 12.00 | 12.00 | 12.00 | 12.00 | 12.00 | 12.00 | 12.00 | 12.00 | 12.00 | 12.00 | 12.00 | 12.00 |
| No. of Lanes in Pocket | 2 | 0 | 0 | 2 | 0 | 0 | 1 | 0 | 0 | 0 | 0 | 1 |
| Pocket Length [ft] | 540.00 | 100.00 | 100.00 | 295.00 | 100.00 | 100.00 | 430.00 | 100.00 | 100.00 | 100.00 | 100.00 | 520.00 |
| Speed [mph] | 40.00 | | | 35.00 | | | 30.00 | | | 30.00 | | |
| Grade [%] | 0.00 | | | 0.00 | | | 0.00 | | | 0.00 | | |
| Crosswalk | No | | | No | | | Yes | | | Yes | | |

**volumes**

| Name | Sierra Avenue | | | Sierra Avenue | | | I-10 Ramps | | | | | |
|---|---|---|---|---|---|---|---|---|---|---|---|---|
| Base Volume Input [veh/h] | 369 | 1078 | 653 | 636 | 1022 | 878 | 767 | 0 | 472 | 460 | 0 | 544 |
| Base Volume Adjustment Factor | 1.0000 | 1.0000 | 1.0000 | 1.0000 | 1.0000 | 1.0000 | 1.0000 | 1.0000 | 1.0000 | 1.0000 | 1.0000 | 1.0000 |
| Heavy Vehicles Percentage [%] | 2.00 | 2.00 | 2.00 | 2.00 | 2.00 | 2.00 | 2.00 | 2.00 | 2.00 | 2.00 | 2.00 | 2.00 |
| Growth Rate | 1.00 | 1.00 | 1.00 | 1.00 | 1.00 | 1.00 | 1.00 | 1.00 | 1.00 | 1.00 | 1.00 | 1.00 |
| In-Process Volume [veh/h] | 0 | 0 | 0 | 0 | 0 | 0 | 0 | 0 | 0 | 0 | 0 | 0 |
| Site-Generated Trips [veh/h] | 0 | 32 | -1 | 0 | 40 | 0 | 0 | 0 | 0 | -1 | 0 | 0 |
| Diverted Trips [veh/h] | 0 | 0 | 0 | 0 | 0 | 0 | 0 | 0 | 0 | 0 | 0 | 0 |
| Pass-by Trips [veh/h] | 0 | 0 | 0 | 0 | 0 | 0 | 0 | 0 | 0 | 0 | 0 | 0 |
| Existing Site Adjustment Volume [veh/h] | 0 | 0 | 0 | 0 | 0 | 0 | 0 | 0 | 0 | 0 | 0 | 0 |
| Other Volume [veh/h] | 0 | 0 | 0 | 0 | 0 | 0 | 0 | 0 | 0 | 0 | 0 | 0 |
| Right-Turn on Red Volume [veh/h] | 0 | 0 | 0 | 0 | 0 | 0 | 0 | 0 | 0 | 0 | 0 | 0 |
| Total Hourly Volume [veh/h] | 369 | 1110 | 652 | 636 | 1062 | 878 | 767 | 0 | 472 | 459 | 0 | 544 |
| Peak Hour Factor | 0.9830 | 0.9830 | 0.9830 | 0.9830 | 0.9830 | 0.9830 | 0.9830 | 1.0000 | 0.9830 | 0.9830 | 1.0000 | 0.9830 |
| Other Adjustment Factor | 1.0000 | 1.0000 | 1.0000 | 1.0000 | 1.0000 | 1.0000 | 1.0000 | 1.0000 | 1.0000 | 1.0000 | 1.0000 | 1.0000 |
| Total 15-Minute Volume [veh/h] | 94 | 282 | 166 | 162 | 270 | 223 | 195 | 0 | 120 | 117 | 0 | 138 |
| Total Analysis Volume [veh/h] | 375 | 1129 | 663 | 647 | 1080 | 893 | 780 | 0 | 480 | 467 | 0 | 553 |
| Presence of On-Street Parking | No | | No | No | | No | No | | No | No | | No |
| On-Street Parking Maneuver Rate [/h] | 0 | 0 | 0 | 0 | 0 | 0 | 0 | 0 | 0 | 0 | 0 | 0 |
| Local Bus Stopping Rate [/h] | 0 | 0 | 0 | 0 | 0 | 0 | 0 | 0 | 0 | 0 | 0 | 0 |
| Pedestrian Volume [ped/h] | 0 | | | 0 | | | 0 | | | 0 | | |
| Bicycle Volume [bicycles/h] | 0 | | | 0 | | | 0 | | | 0 | | |

**Intersection Settings**

| | |
|---|---|
| Located in CBD | No |
| Signal Coordination Group | 1 - NS - Sierra |
| Cycle Length [s] | 120 |
| Coordination Type | Time of Day Pattern Coordinated |
| Actuation Type | Fully actuated |
| Offset [s] | 90.0 |
| Offset Reference | LagFO |
| Permissive Mode | SingleBand |
| Lost time [s] | 12.00 |

**Phasing & Timing**

| Control Type | Permiss | Permiss | Overlap | Permiss | Permiss | Overlap | Permiss | Permiss | Overlap | Permiss | Permiss | Overlap |
|---|---|---|---|---|---|---|---|---|---|---|---|---|
| Signal group | 2 | 2 | 2 | 6 | 6 | 6 | 3 | 0 | 3 | 7 | 0 | 7 |
| Auxiliary Signal Groups | | | 2,3,6,7 | | | 2,3,6,7 | | | 2,3,6 | | | 2,6,7 |
| Lead / Lag | Lag | - | - | Lag | - | - | Lead | - | - | Lead | - | - |
| Minimum Green [s] | 5 | 5 | 5 | 5 | 5 | 5 | 5 | 0 | 5 | 5 | 0 | 5 |
| Maximum Green [s] | 30 | 30 | 30 | 30 | 30 | 30 | 30 | 0 | 30 | 30 | 0 | 30 |
| Amber [s] | 4.4 | 4.4 | 4.4 | 4.1 | 4.1 | 4.1 | 3.7 | 0.0 | 3.7 | 3.7 | 0.0 | 3.7 |
| All red [s] | 3.0 | 3.0 | 3.0 | 3.0 | 3.0 | 3.0 | 3.0 | 0.0 | 3.0 | 3.0 | 0.0 | 3.0 |
| Split [s] | 35 | 35 | 35 | 44 | 44 | 44 | 41 | 0 | 41 | 41 | 0 | 41 |
| Vehicle Extension [s] | 3.0 | 3.0 | 3.0 | 3.0 | 3.0 | 3.0 | 3.0 | 0.0 | 3.0 | 3.0 | 0.0 | 3.0 |
| Walk [s] | 7 | 7 | 7 | 7 | 7 | 7 | 7 | 0 | 7 | 7 | 0 | 7 |
| Pedestrian Clearance [s] | 15 | 15 | 15 | 15 | 15 | 15 | 15 | 0 | 15 | 15 | 0 | 15 |
| I1, Start-Up Lost Time [s] | 2.0 | 2.0 | 2.0 | 2.0 | 2.0 | 2.0 | 2.0 | 0.0 | 2.0 | 2.0 | 0.0 | 2.0 |
| I2, Clearance Lost Time [s] | 5.4 | 5.4 | 5.4 | 5.1 | 5.1 | 5.1 | 4.7 | 0.0 | 4.7 | 4.7 | 0.0 | 4.7 |
| Minimum Recall | | No | No | | No | No | No | | No | No | | No |
| Maximum Recall | | No | No | | No | No | No | | No | No | | No |
| Pedestrian Recall | | No | No | | No | No | No | | No | No | | No |
| Detector Location [ft] | 0.0 | 0.0 | 0.0 | 0.0 | 0.0 | 0.0 | 0.0 | 0.0 | 0.0 | 0.0 | 0.0 | 0.0 |
| Detector Length [ft] | 0.0 | 0.0 | 0.0 | 0.0 | 0.0 | 0.0 | 0.0 | 0.0 | 0.0 | 0.0 | 0.0 | 0.0 |
| I, Upstream Filtering Factor | 1.00 | 1.00 | 1.00 | 1.00 | 1.00 | 1.00 | 1.00 | 1.00 | 1.00 | 1.00 | 1.00 | 1.00 |

**Exclusive Pedestrian Phase**

| | |
|---|---|
| Pedestrian Signal Group | 0 |
| Pedestrian Walk [s] | 0 |
| Pedestrian Clearance [s] | 0 |

**Lane Group Calculations**

| Lane Group | L | C | R | L | C | R | L | R | L | R |
|---|---|---|---|---|---|---|---|---|---|---|
| L, Total Lost Time per Cycle [s] | 7.40 | 7.40 | 7.10 | 7.10 | 7.10 | 7.10 | 6.70 | 7.10 | 6.70 | 7.10 |
| l1_p, Permitted Start-Up Lost Time [s] | 2.00 | 0.00 | 0.00 | 2.00 | 0.00 | 0.00 | 2.00 | 0.00 | 2.00 | 0.00 |
| l2, Clearance Lost Time [s] | 5.40 | 5.40 | 0.00 | 5.10 | 5.10 | 0.00 | 4.70 | 5.40 | 4.70 | 0.00 |
| g_i, Effective Green Time [s] | 32 | 32 | 140 | 32 | 32 | 140 | 34 | 145 | 34 | 105 |
| g / C, Green / Cycle | 0.27 | 0.27 | 1.16 | 0.27 | 0.27 | 1.16 | 0.29 | 1.21 | 0.29 | 0.88 |
| (v / s)_i Volume / Saturation Flow Rate | 0.14 | 0.22 | 0.42 | 0.24 | 0.21 | 0.56 | 0.28 | 0.30 | 0.17 | 0.35 |
| s, saturation flow rate [veh/h] | 2741 | 5074 | 1583 | 2741 | 5074 | 1583 | 2741 | 1583 | 2741 | 1583 |
| c, Capacity [veh/h] | 742 | 1358 | 1843 | 754 | 1370 | 1843 | 792 | 1913 | 792 | 1392 |
| d1, Uniform Delay [s] | 34.14 | 36.04 | 0.00 | 38.34 | 35.25 | 0.00 | 44.87 | 0.00 | 38.77 | 0.67 |
| k, delay calibration | 0.50 | 0.50 | 0.50 | 0.50 | 0.50 | 0.50 | 0.11 | 0.50 | 0.11 | 0.50 |
| I, Upstream Filtering Factor | 1.00 | 1.00 | 1.00 | 1.00 | 1.00 | 1.00 | 1.00 | 1.00 | 1.00 | 1.00 |
| d2, Incremental Delay [s] | 2.45 | 6.06 | 0.55 | 12.13 | 4.66 | 0.91 | 11.74 | 0.31 | 0.70 | 0.85 |
| d3, Initial Queue Delay [s] | 0.00 | 0.00 | 0.00 | 0.00 | 0.00 | 0.00 | 0.00 | 0.00 | 0.00 | 0.00 |
| Rp, platoon ratio | 1.33 | 1.33 | 1.01 | 1.33 | 1.33 | 1.01 | 1.00 | 1.00 | 1.00 | 1.00 |
| PF, progression factor | 1.00 | 1.00 | 1.00 | 1.00 | 1.00 | 1.00 | 1.00 | 1.00 | 1.00 | 1.00 |

**Lane Group Results**

| | | | | | | | | | | |
|---|---|---|---|---|---|---|---|---|---|---|
| X, volume / capacity | 0.51 | 0.83 | 0.36 | 0.86 | 0.79 | 0.48 | 0.98 | 0.25 | 0.59 | 0.40 |
| d, Delay for Lane Group [s/veh] | 36.59 | 42.10 | 0.55 | 50.47 | 39.92 | 0.91 | 56.61 | 0.31 | 39.48 | 1.53 |
| Lane Group LOS | D | D | A | D | D | A | E | A | D | A |
| Critical Lane Group | No | Yes | No | Yes | No | No | Yes | No | No | No |
| 50th-Percentile Queue Length [veh] | 4.33 | 9.84 | 0.28 | 9.73 | 9.22 | 0.47 | 13.02 | 0.17 | 6.13 | 0.33 |
| 50th-Percentile Queue Length [ft] | 108.34 | 246.02 | 7.01 | 243.14 | 230.44 | 11.70 | 325.45 | 4.18 | 153.31 | 8.22 |
| 95th-Percentile Queue Length [veh] | 7.75 | 14.99 | 0.50 | 14.84 | 14.20 | 0.84 | 18.94 | 0.30 | 10.19 | 0.59 |
| 95th-Percentile Queue Length [ft] | 193.70 | 374.64 | 12.61 | 371.00 | 354.92 | 21.06 | 473.39 | 7.53 | 254.84 | 14.79 |

**Movement, Approach, & Intersection Results**

| | | | | | | | | | | | | |
|---|---|---|---|---|---|---|---|---|---|---|---|---|
| d_M, Delay for Movement [s/veh] | 36.59 | 42.10 | 0.55 | 50.47 | 39.92 | 0.91 | 56.61 | 0.00 | 0.31 | 39.48 | 0.00 | 1.53 |
| Movement LOS | D | D | A | D | D | A | E | | A | D | | A |
| d_A, Approach Delay [s/veh] | 28.43 | | | 29.23 | | | 35.16 | | | 18.90 | | |
| Approach LOS | C | | | C | | | D | | | B | | |
| d_I, Intersection Delay [s/veh] | 28.55 | | | | | | | | | | | |
| Intersection LOS | C | | | | | | | | | | | |
| Intersection V/C | 0.826 | | | | | | | | | | | |

## Sequence

| | | | | | | | | | | | | | | | | |
|---|---|---|---|---|---|---|---|---|---|---|---|---|---|---|---|---|
| Ring 1 | 2 | 6 | 3 | - | - | - | - | - | - | - | - | - | - | - | - | - |
| Ring 2 | - | - | 7 | - | - | - | - | - | - | - | - | - | - | - | - | - |
| Ring 3 | - | - | - | - | - | - | - | - | - | - | - | - | - | - | - | - |
| Ring 4 | - | - | - | - | - | - | - | - | - | - | - | - | - | - | - | - |

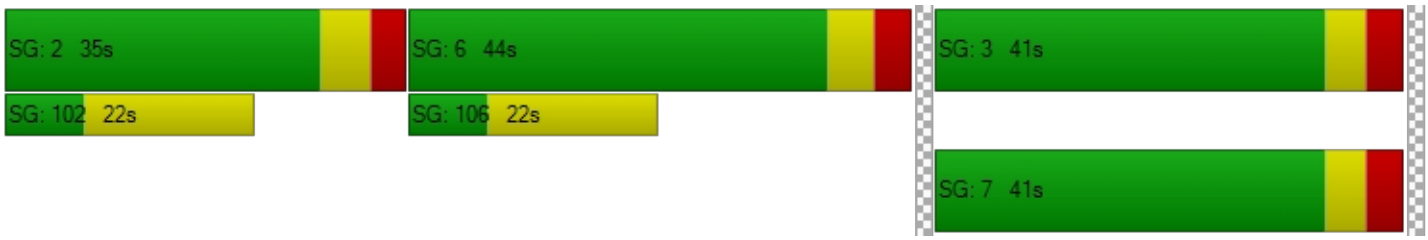

**Intersection Level Of Service Report**
**Intersection 4: Sierra Ave (NS) / Slover Ave (EW)**

| | | | |
|---|---|---|---|
| Control Type: | Signalized | Delay (sec / veh): | 34.7 |
| Analysis Method: | HCM 2010 | Level Of Service: | C |
| Analysis Period: | 15 minutes | Volume to Capacity (v/c): | 0.789 |

**Intersection Setup**

| Name | Sierra Avenue | | | Sierra Avenue | | | Slover Avenue | | | Slover Avenue | | |
|---|---|---|---|---|---|---|---|---|---|---|---|---|
| Approach | Northbound | | | Southbound | | | Eastbound | | | Westbound | | |
| Lane Configuration | | | | | | | | | | | | |
| Turning Movement | Left | Thru | Right | Left | Thru | Right | Left | Thru | Right | Left | Thru | Right |
| Lane Width [ft] | 12.00 | 12.00 | 12.00 | 12.00 | 12.00 | 12.00 | 12.00 | 12.00 | 12.00 | 12.00 | 12.00 | 12.00 |
| No. of Lanes in Pocket | 2 | 0 | 0 | 2 | 0 | 0 | 2 | 0 | 1 | 2 | 0 | 1 |
| Pocket Length [ft] | 195.00 | 100.00 | 100.00 | 615.00 | 100.00 | 100.00 | 290.00 | 100.00 | 290.00 | 230.00 | 100.00 | 300.00 |
| Speed [mph] | 50.00 | | | 40.00 | | | 45.00 | | | 45.00 | | |
| Grade [%] | 0.00 | | | 0.00 | | | 0.00 | | | 0.00 | | |
| Crosswalk | Yes | | | Yes | | | Yes | | | Yes | | |

**volumes**

| Name | Sierra Avenue | | | Sierra Avenue | | | Slover Avenue | | | Slover Avenue | | |
|---|---|---|---|---|---|---|---|---|---|---|---|---|
| Base Volume Input [veh/h] | 144 | 1047 | 199 | 668 | 1001 | 140 | 302 | 430 | 112 | 234 | 256 | 784 |
| Base Volume Adjustment Factor | 1.0000 | 1.0000 | 1.0000 | 1.0000 | 1.0000 | 1.0000 | 1.0000 | 1.0000 | 1.0000 | 1.0000 | 1.0000 | 1.0000 |
| Heavy Vehicles Percentage [%] | 2.00 | 2.00 | 2.00 | 2.00 | 2.00 | 2.00 | 2.00 | 2.00 | 2.00 | 2.00 | 2.00 | 2.00 |
| Growth Rate | 1.00 | 1.00 | 1.00 | 1.00 | 1.00 | 1.00 | 1.00 | 1.00 | 1.00 | 1.00 | 1.00 | 1.00 |
| In-Process Volume [veh/h] | 0 | 0 | 0 | 0 | 0 | 0 | 0 | 0 | 0 | 0 | 0 | 0 |
| Site-Generated Trips [veh/h] | 0 | 20 | 0 | 0 | 23 | 16 | 11 | 0 | 0 | 0 | 0 | 0 |
| Diverted Trips [veh/h] | 0 | 0 | 0 | 0 | 0 | 0 | 0 | 0 | 0 | 0 | 0 | 0 |
| Pass-by Trips [veh/h] | 0 | 0 | 0 | 0 | 0 | 0 | 0 | 0 | 0 | 0 | 0 | 0 |
| Existing Site Adjustment Volume [veh/h] | 0 | 0 | 0 | 0 | 0 | 0 | 0 | 0 | 0 | 0 | 0 | 0 |
| Other Volume [veh/h] | 0 | 0 | 0 | 0 | 0 | 0 | 0 | 0 | 0 | 0 | 0 | 0 |
| Right-Turn on Red Volume [veh/h] | 0 | 0 | 0 | 0 | 0 | 0 | 0 | 0 | 0 | 0 | 0 | 0 |
| Total Hourly Volume [veh/h] | 144 | 1067 | 199 | 668 | 1024 | 156 | 313 | 430 | 112 | 234 | 256 | 784 |
| Peak Hour Factor | 0.9580 | 0.9580 | 0.9580 | 0.9580 | 0.9580 | 0.9580 | 0.9580 | 0.9580 | 0.9580 | 0.9580 | 0.9580 | 0.9580 |
| Other Adjustment Factor | 1.0000 | 1.0000 | 1.0000 | 1.0000 | 1.0000 | 1.0000 | 1.0000 | 1.0000 | 1.0000 | 1.0000 | 1.0000 | 1.0000 |
| Total 15-Minute Volume [veh/h] | 38 | 278 | 52 | 174 | 267 | 41 | 82 | 112 | 29 | 61 | 67 | 205 |
| Total Analysis Volume [veh/h] | 150 | 1114 | 208 | 697 | 1069 | 163 | 327 | 449 | 117 | 244 | 267 | 818 |
| Presence of On-Street Parking | No | | No | No | | No | No | | No | No | | No |
| On-Street Parking Maneuver Rate [/h] | 0 | 0 | 0 | 0 | 0 | 0 | 0 | 0 | 0 | 0 | 0 | 0 |
| Local Bus Stopping Rate [/h] | 0 | 0 | 0 | 0 | 0 | 0 | 0 | 0 | 0 | 0 | 0 | 0 |
| Pedestrian Volume [ped/h] | 0 | | | 0 | | | 0 | | | 0 | | |
| Bicycle Volume [bicycles/h] | 0 | | | 0 | | | 0 | | | 0 | | |

**Intersection Settings**

| | |
|---|---|
| Located in CBD | No |
| Signal Coordination Group | 1 - NS - Sierra |
| Cycle Length [s] | 120 |
| Coordination Type | Time of Day Pattern Coordinated |
| Actuation Type | Fully actuated |
| Offset [s] | 20.0 |
| Offset Reference | LagFO |
| Permissive Mode | SingleBand |
| Lost time [s] | 16.00 |

**Phasing & Timing**

| Control Type | Protecte | Permiss | Permiss | Protecte | Permiss | Permiss | Protecte | Permiss | Permiss | Protecte | Permiss | Overlap |
|---|---|---|---|---|---|---|---|---|---|---|---|---|
| Signal group | 5 | 2 | 0 | 1 | 6 | 0 | 3 | 8 | 0 | 7 | 4 | 4 |
| Auxiliary Signal Groups | | | | | | | | | | | | 1,4 |
| Lead / Lag | Lead | - | - | Lead | - | - | Lead | - | - | Lead | - | - |
| Minimum Green [s] | 5 | 5 | 0 | 5 | 5 | 0 | 5 | 5 | 0 | 5 | 5 | 5 |
| Maximum Green [s] | 30 | 30 | 0 | 30 | 30 | 0 | 30 | 30 | 0 | 30 | 30 | 30 |
| Amber [s] | 5.2 | 5.2 | 0.0 | 4.4 | 4.4 | 0.0 | 4.8 | 4.8 | 0.0 | 4.8 | 4.8 | 4.8 |
| All red [s] | 1.0 | 1.0 | 0.0 | 1.0 | 1.0 | 0.0 | 1.0 | 1.0 | 0.0 | 1.0 | 1.0 | 1.0 |
| Split [s] | 13 | 45 | 0 | 35 | 67 | 0 | 19 | 24 | 0 | 16 | 21 | 21 |
| Vehicle Extension [s] | 3.0 | 3.0 | 0.0 | 3.0 | 3.0 | 0.0 | 3.0 | 3.0 | 0.0 | 3.0 | 3.0 | 3.0 |
| Walk [s] | 0 | 5 | 0 | 0 | 5 | 0 | 0 | 5 | 0 | 0 | 5 | 5 |
| Pedestrian Clearance [s] | 0 | 10 | 0 | 0 | 10 | 0 | 0 | 10 | 0 | 0 | 10 | 10 |
| I1, Start-Up Lost Time [s] | 2.0 | 2.0 | 0.0 | 2.0 | 2.0 | 0.0 | 2.0 | 2.0 | 0.0 | 2.0 | 2.0 | 2.0 |
| I2, Clearance Lost Time [s] | 4.2 | 4.2 | 0.0 | 3.4 | 3.4 | 0.0 | 3.8 | 3.8 | 0.0 | 3.8 | 3.8 | 3.8 |
| Minimum Recall | No | No | | No | No | | No | No | | No | No | No |
| Maximum Recall | No | No | | No | No | | No | No | | No | No | No |
| Pedestrian Recall | No | No | | No | No | | No | No | | No | No | No |
| Detector Location [ft] | 0.0 | 0.0 | 0.0 | 0.0 | 0.0 | 0.0 | 0.0 | 0.0 | 0.0 | 0.0 | 0.0 | 0.0 |
| Detector Length [ft] | 0.0 | 0.0 | 0.0 | 0.0 | 0.0 | 0.0 | 0.0 | 0.0 | 0.0 | 0.0 | 0.0 | 0.0 |
| I, Upstream Filtering Factor | 1.00 | 1.00 | 1.00 | 1.00 | 1.00 | 1.00 | 1.00 | 1.00 | 1.00 | 1.00 | 1.00 | 1.00 |

**Exclusive Pedestrian Phase**

| | |
|---|---|
| Pedestrian Signal Group | 0 |
| Pedestrian Walk [s] | 0 |
| Pedestrian Clearance [s] | 0 |

**Lane Group Calculations**

| Lane Group | L | C | R | L | C | C | L | C | R | L | C | R |
|---|---|---|---|---|---|---|---|---|---|---|---|---|
| L, Total Lost Time per Cycle [s] | 6.20 | 6.20 | 6.20 | 5.40 | 5.40 | 5.40 | 5.80 | 5.80 | 5.80 | 5.80 | 5.80 | 5.40 |
| l1_p, Permitted Start-Up Lost Time [s] | 0.00 | 0.00 | 0.00 | 0.00 | 0.00 | 0.00 | 0.00 | 0.00 | 0.00 | 0.00 | 0.00 | 0.00 |
| l2, Clearance Lost Time [s] | 4.20 | 4.20 | 4.20 | 3.40 | 3.40 | 3.40 | 3.80 | 3.80 | 3.80 | 3.80 | 3.80 | 0.00 |
| g_i, Effective Green Time [s] | 7 | 42 | 42 | 27 | 62 | 62 | 13 | 17 | 17 | 10 | 14 | 48 |
| g / C, Green / Cycle | 0.06 | 0.35 | 0.35 | 0.23 | 0.52 | 0.52 | 0.11 | 0.14 | 0.14 | 0.09 | 0.12 | 0.40 |
| (v / s)_i Volume / Saturation Flow Rate | 0.04 | 0.22 | 0.13 | 0.20 | 0.23 | 0.23 | 0.09 | 0.13 | 0.07 | 0.07 | 0.08 | 0.29 |
| s, saturation flow rate [veh/h] | 3445 | 5074 | 1583 | 3445 | 3547 | 1740 | 3445 | 3547 | 1583 | 3445 | 3547 | 2803 |
| c, Capacity [veh/h] | 200 | 1766 | 551 | 789 | 1841 | 903 | 382 | 509 | 227 | 297 | 421 | 1110 |
| d1, Uniform Delay [s] | 54.58 | 26.35 | 23.74 | 40.20 | 10.81 | 10.83 | 52.48 | 50.47 | 47.59 | 54.01 | 50.46 | 30.94 |
| k, delay calibration | 0.11 | 0.50 | 0.50 | 0.11 | 0.50 | 0.50 | 0.11 | 0.11 | 0.11 | 0.11 | 0.11 | 0.13 |
| I, Upstream Filtering Factor | 1.00 | 1.00 | 1.00 | 1.00 | 1.00 | 1.00 | 1.00 | 1.00 | 1.00 | 1.00 | 1.00 | 1.00 |
| d2, Incremental Delay [s] | 5.54 | 1.72 | 1.97 | 3.48 | 0.79 | 1.63 | 5.56 | 5.20 | 1.80 | 5.65 | 1.58 | 1.19 |
| d3, Initial Queue Delay [s] | 0.00 | 0.00 | 0.00 | 0.00 | 0.00 | 0.00 | 0.00 | 0.00 | 0.00 | 0.00 | 0.00 | 0.00 |
| Rp, platoon ratio | 1.33 | 1.33 | 1.33 | 1.33 | 1.33 | 1.33 | 1.00 | 1.00 | 1.00 | 1.00 | 1.00 | 1.00 |
| PF, progression factor | 1.00 | 1.00 | 1.00 | 1.00 | 1.00 | 1.00 | 1.00 | 1.00 | 1.00 | 1.00 | 1.00 | 1.00 |

**Lane Group Results**

| | | | | | | | | | | | | |
|---|---|---|---|---|---|---|---|---|---|---|---|---|
| X, volume / capacity | 0.75 | 0.63 | 0.38 | 0.88 | 0.45 | 0.45 | 0.86 | 0.88 | 0.51 | 0.82 | 0.63 | 0.74 |
| d, Delay for Lane Group [s/veh] | 60.12 | 28.07 | 25.70 | 43.68 | 11.60 | 12.46 | 58.04 | 55.66 | 49.39 | 59.66 | 52.05 | 32.13 |
| Lane Group LOS | E | C | C | D | B | B | E | E | D | E | D | C |
| Critical Lane Group | No | Yes | No | Yes | No | No | Yes | No | No | No | No | Yes |
| 50th-Percentile Queue Length [veh] | 2.28 | 7.01 | 3.74 | 9.32 | 4.13 | 4.29 | 5.01 | 6.79 | 3.27 | 3.77 | 3.82 | 9.75 |
| 50th-Percentile Queue Length [ft] | 56.91 | 175.28 | 93.55 | 233.00 | 103.29 | 107.36 | 125.28 | 169.72 | 81.74 | 94.25 | 95.48 | 243.81 |
| 95th-Percentile Queue Length [veh] | 4.10 | 11.35 | 6.74 | 14.33 | 7.44 | 7.69 | 8.68 | 11.06 | 5.89 | 6.79 | 6.87 | 14.87 |
| 95th-Percentile Queue Length [ft] | 102.44 | 283.84 | 168.39 | 358.17 | 185.92 | 192.32 | 217.07 | 276.55 | 147.14 | 169.65 | 171.86 | 371.85 |

**Movement, Approach, & Intersection Results**

| | | | | | | | | | | | | |
|---|---|---|---|---|---|---|---|---|---|---|---|---|
| d_M, Delay for Movement [s/veh] | 60.12 | 28.07 | 25.70 | 43.68 | 11.80 | 12.46 | 58.04 | 55.66 | 49.39 | 59.66 | 52.05 | 32.13 |
| Movement LOS | E | C | C | D | B | B | E | E | D | E | D | C |
| d_A, Approach Delay [s/veh] | 31.00 | | | 23.37 | | | 55.71 | | | 41.19 | | |
| Approach LOS | C | | | C | | | E | | | D | | |
| d_I, Intersection Delay [s/veh] | 34.72 | | | | | | | | | | | |
| Intersection LOS | C | | | | | | | | | | | |
| Intersection V/C | 0.789 | | | | | | | | | | | |

## Sequence

| | | | | | | | | | | | | | | | | |
|---|---|---|---|---|---|---|---|---|---|---|---|---|---|---|---|---|
| Ring 1 | 1 | 2 | 3 | 4 | - | - | - | - | - | - | - | - | - | - | - | - |
| Ring 2 | 5 | 6 | 7 | 8 | - | - | - | - | - | - | - | - | - | - | - | - |
| Ring 3 | - | - | - | - | - | - | - | - | - | - | - | - | - | - | - | - |
| Ring 4 | - | - | - | - | - | - | - | - | - | - | - | - | - | - | - | - |

**Intersection Level Of Service Report**
**Intersection 5: Palmetto Ave (NS) / Valley Blvd (EW)**

| | | | |
|---|---|---|---|
| Control Type: | Signalized | Delay (sec / veh): | 17.0 |
| Analysis Method: | HCM 2010 | Level Of Service: | B |
| Analysis Period: | 15 minutes | Volume to Capacity (v/c): | 0.564 |

**Intersection Setup**

| Name | Palmetto Avenue | | Valley Boulevard | | Valley Boulevard | |
|---|---|---|---|---|---|---|
| Approach | Southbound | | Eastbound | | Westbound | |
| Lane Configuration | | | | | | |
| Turning Movement | Left | Right | Left | Thru | Thru | Right |
| Lane Width [ft] | 12.00 | 12.00 | 12.00 | 12.00 | 12.00 | 12.00 |
| No. of Lanes in Pocket | 0 | 0 | 1 | 0 | 0 | 0 |
| Pocket Length [ft] | 100.00 | 100.00 | 150.00 | 100.00 | 100.00 | 100.00 |
| Speed [mph] | 35.00 | | 40.00 | | 40.00 | |
| Grade [%] | 0.00 | | 0.00 | | 0.00 | |
| Crosswalk | Yes | | Yes | | No | |

**volumes**

| Name | Palmetto Avenue | | Valley Boulevard | | Valley Boulevard | |
|---|---|---|---|---|---|---|
| Base Volume Input [veh/h] | 63 | 156 | 319 | 1037 | 560 | 70 |
| Base Volume Adjustment Factor | 1.0000 | 1.0000 | 1.0000 | 1.0000 | 1.0000 | 1.0000 |
| Heavy Vehicles Percentage [%] | 2.00 | 2.00 | 4.00 | 4.00 | 4.00 | 4.00 |
| Growth Rate | 1.00 | 1.00 | 1.00 | 1.00 | 1.00 | 1.00 |
| In-Process Volume [veh/h] | 0 | 0 | 0 | 0 | 0 | 0 |
| Site-Generated Trips [veh/h] | 16 | 0 | 0 | 71 | 92 | 22 |
| Diverted Trips [veh/h] | 0 | 0 | 0 | 0 | 0 | 0 |
| Pass-by Trips [veh/h] | 0 | 0 | 0 | 0 | 0 | 0 |
| Existing Site Adjustment Volume [veh/h] | 0 | 0 | 0 | 0 | 0 | 0 |
| Other Volume [veh/h] | 0 | 0 | 0 | 0 | 0 | 0 |
| Right-Turn on Red Volume [veh/h] | 0 | 0 | 0 | 0 | 0 | 0 |
| Total Hourly Volume [veh/h] | 79 | 156 | 319 | 1108 | 652 | 92 |
| Peak Hour Factor | 0.9270 | 0.9270 | 0.9270 | 0.9270 | 0.9270 | 0.9270 |
| Other Adjustment Factor | 1.0000 | 1.0000 | 1.0000 | 1.0000 | 1.0000 | 1.0000 |
| Total 15-Minute Volume [veh/h] | 21 | 42 | 86 | 299 | 176 | 25 |
| Total Analysis Volume [veh/h] | 85 | 168 | 344 | 1195 | 703 | 99 |
| Presence of On-Street Parking | No | No | No | No | No | No |
| On-Street Parking Maneuver Rate [/h] | 0 | 0 | 0 | 0 | 0 | 0 |
| Local Bus Stopping Rate [/h] | 0 | 0 | 0 | 0 | 0 | 0 |
| Pedestrian Volume [ped/h] | 0 | | 0 | | 0 | |
| Bicycle Volume [bicycles/h] | 0 | | 0 | | 0 | |

**Intersection Settings**

| | |
|---|---|
| Located in CBD | No |
| Signal Coordination Group | 3 - EW - Valley |
| Cycle Length [s] | 120 |
| Coordination Type | Time of Day Pattern Coordinated |
| Actuation Type | Fully actuated |
| Offset [s] | 0.0 |
| Offset Reference | LagFO |
| Permissive Mode | SingleBand |
| Lost time [s] | 12.00 |

**Phasing & Timing**

| Control Type | Split | Split | Protected | Permissive | Permissive | Permissive |
|---|---|---|---|---|---|---|
| Signal group | 1 | 0 | 3 | 8 | 4 | 0 |
| Auxiliary Signal Groups | | | | | | |
| Lead / Lag | Lead | - | Lead | - | - | - |
| Minimum Green [s] | 5 | 0 | 5 | 5 | 5 | 0 |
| Maximum Green [s] | 30 | 0 | 30 | 30 | 30 | 0 |
| Amber [s] | 4.1 | 0.0 | 4.4 | 4.4 | 4.4 | 0.0 |
| All red [s] | 1.0 | 0.0 | 1.0 | 1.0 | 1.0 | 0.0 |
| Split [s] | 39 | 0 | 42 | 81 | 39 | 0 |
| Vehicle Extension [s] | 3.0 | 0.0 | 3.0 | 3.0 | 3.0 | 0.0 |
| Walk [s] | 7 | 0 | 0 | 7 | 7 | 0 |
| Pedestrian Clearance [s] | 26 | 0 | 0 | 17 | 17 | 0 |
| I1, Start-Up Lost Time [s] | 2.0 | 0.0 | 2.0 | 2.0 | 2.0 | 0.0 |
| I2, Clearance Lost Time [s] | 3.1 | 0.0 | 3.4 | 3.4 | 3.4 | 0.0 |
| Minimum Recall | No | | No | No | No | |
| Maximum Recall | No | | No | No | No | |
| Pedestrian Recall | No | | No | No | No | |
| Detector Location [ft] | 0.0 | 0.0 | 0.0 | 0.0 | 0.0 | 0.0 |
| Detector Length [ft] | 0.0 | 0.0 | 0.0 | 0.0 | 0.0 | 0.0 |
| I, Upstream Filtering Factor | 1.00 | 1.00 | 1.00 | 1.00 | 1.00 | 1.00 |

**Exclusive Pedestrian Phase**

| | |
|---|---|
| Pedestrian Signal Group | 0 |
| Pedestrian Walk [s] | 0 |
| Pedestrian Clearance [s] | 0 |

**Lane Group Calculations**

| Lane Group | C | L | C | C | C |
|---|---|---|---|---|---|
| L, Total Lost Time per Cycle [s] | 5.10 | 5.40 | 5.40 | 5.40 | 5.40 |
| l1_p, Permitted Start-Up Lost Time [s] | 0.00 | 0.00 | 0.00 | 0.00 | 0.00 |
| l2, Clearance Lost Time [s] | 3.10 | 3.40 | 3.40 | 3.40 | 3.40 |
| g_i, Effective Green Time [s] | 21 | 26 | 89 | 58 | 58 |
| g / C, Green / Cycle | 0.17 | 0.21 | 0.74 | 0.48 | 0.48 |
| (v / s)_i Volume / Saturation Flow Rate | 0.15 | 0.20 | 0.34 | 0.15 | 0.16 |
| s, saturation flow rate [veh/h] | 1643 | 1740 | 3478 | 3478 | 1715 |
| c, Capacity [veh/h] | 282 | 373 | 2577 | 1674 | 825 |
| d1, Uniform Delay [s] | 48.65 | 41.82 | 0.20 | 12.64 | 12.67 |
| k, delay calibration | 0.11 | 0.11 | 0.50 | 0.50 | 0.50 |
| I, Upstream Filtering Factor | 1.00 | 1.00 | 1.00 | 1.00 | 1.00 |
| d2, Incremental Delay [s] | 9.93 | 9.57 | 0.60 | 0.50 | 1.04 |
| d3, Initial Queue Delay [s] | 0.00 | 0.00 | 0.00 | 0.00 | 0.00 |
| Rp, platoon ratio | 1.00 | 1.33 | 1.33 | 1.33 | 1.33 |
| PF, progression factor | 1.00 | 1.00 | 1.00 | 1.00 | 1.00 |

**Lane Group Results**

| | | | | | |
|---|---|---|---|---|---|
| X, volume / capacity | 0.90 | 0.92 | 0.46 | 0.32 | 0.32 |
| d, Delay for Lane Group [s/veh] | 58.58 | 51.40 | 0.80 | 13.15 | 13.71 |
| Lane Group LOS | E | D | A | B | B |
| Critical Lane Group | Yes | Yes | No | No | Yes |
| 50th-Percentile Queue Length [veh] | 8.10 | 10.02 | 0.37 | 3.00 | 3.13 |
| 50th-Percentile Queue Length [ft] | 202.57 | 250.60 | 9.21 | 75.06 | 78.22 |
| 95th-Percentile Queue Length [veh] | 12.77 | 15.22 | 0.66 | 5.40 | 5.63 |
| 95th-Percentile Queue Length [ft] | 319.28 | 380.41 | 16.58 | 135.11 | 140.80 |

**Movement, Approach, & Intersection Results**

| | | | | | | |
|---|---|---|---|---|---|---|
| d_M, Delay for Movement [s/veh] | 58.58 | 58.58 | 51.40 | 0.80 | 13.28 | 13.71 |
| Movement LOS | E | E | D | A | B | B |
| d_A, Approach Delay [s/veh] | 58.58 | | 12.11 | | 13.33 | |
| Approach LOS | E | | B | | B | |
| d_I, Intersection Delay [s/veh] | 17.02 | | | | | |
| Intersection LOS | B | | | | | |
| Intersection V/C | 0.564 | | | | | |

## Sequence

| | | | | | | | | | | | | | | | | |
|---|---|---|---|---|---|---|---|---|---|---|---|---|---|---|---|---|
| Ring 1 | 1 | 3 | 4 | - | - | - | - | - | - | - | - | - | - | - | - | - |
| Ring 2 | - | - | 8 | - | - | - | - | - | - | - | - | - | - | - | - | - |
| Ring 3 | - | - | - | - | - | - | - | - | - | - | - | - | - | - | - | - |
| Ring 4 | - | - | - | - | - | - | - | - | - | - | - | - | - | - | - | - |

**Intersection Level Of Service Report**
**Intersection 6: Alder Ave (NS) / San Bernardino Ave (EW)**

| | | | |
|---|---|---|---|
| Control Type: | Signalized | Delay (sec / veh): | 17.1 |
| Analysis Method: | HCM 2010 | Level Of Service: | B |
| Analysis Period: | 15 minutes | Volume to Capacity (v/c): | 0.495 |

**Intersection Setup**

| Name | Alder Avenue | | | Alder Avenue | | | San Bernardino Avenue | | | San Bernardino Avenue | | |
|---|---|---|---|---|---|---|---|---|---|---|---|---|
| Approach | Northbound | | | Southbound | | | Eastbound | | | Westbound | | |
| Lane Configuration | | | | | | | | | | | | |
| Turning Movement | Left | Thru | Right | Left | Thru | Right | Left | Thru | Right | Left | Thru | Right |
| Lane Width [ft] | 12.00 | 12.00 | 12.00 | 12.00 | 12.00 | 12.00 | 12.00 | 12.00 | 12.00 | 12.00 | 12.00 | 12.00 |
| No. of Lanes in Pocket | 1 | 0 | 0 | 1 | 0 | 0 | 1 | 0 | 0 | 1 | 0 | 0 |
| Pocket Length [ft] | 100.00 | 100.00 | 100.00 | 100.00 | 100.00 | 100.00 | 100.00 | 100.00 | 100.00 | 80.00 | 100.00 | 100.00 |
| Speed [mph] | 40.00 | | | 40.00 | | | 35.00 | | | 35.00 | | |
| Grade [%] | 0.00 | | | 0.00 | | | 0.00 | | | 0.00 | | |
| Crosswalk | Yes | | | Yes | | | Yes | | | Yes | | |

**volumes**

| Name | Alder Avenue | | | Alder Avenue | | | San Bernardino Avenue | | | San Bernardino Avenue | | |
|---|---|---|---|---|---|---|---|---|---|---|---|---|
| Base Volume Input [veh/h] | 35 | 392 | 59 | 29 | 214 | 47 | 76 | 231 | 52 | 29 | 154 | 16 |
| Base Volume Adjustment Factor | 1.0000 | 1.0000 | 1.0000 | 1.0000 | 1.0000 | 1.0000 | 1.0000 | 1.0000 | 1.0000 | 1.0000 | 1.0000 | 1.0000 |
| Heavy Vehicles Percentage [%] | 2.00 | 2.00 | 2.00 | 2.00 | 2.00 | 2.00 | 2.00 | 2.00 | 2.00 | 2.00 | 2.00 | 2.00 |
| Growth Rate | 1.00 | 1.00 | 1.00 | 1.00 | 1.00 | 1.00 | 1.00 | 1.00 | 1.00 | 1.00 | 1.00 | 1.00 |
| In-Process Volume [veh/h] | 0 | 0 | 0 | 0 | 0 | 0 | 0 | 0 | 0 | 0 | 0 | 0 |
| Site-Generated Trips [veh/h] | 16 | 45 | 0 | 0 | 30 | 0 | 0 | 0 | 11 | 0 | 0 | 0 |
| Diverted Trips [veh/h] | 0 | 0 | 0 | 0 | 0 | 0 | 0 | 0 | 0 | 0 | 0 | 0 |
| Pass-by Trips [veh/h] | 0 | 0 | 0 | 0 | 0 | 0 | 0 | 0 | 0 | 0 | 0 | 0 |
| Existing Site Adjustment Volume [veh/h] | 0 | 0 | 0 | 0 | 0 | 0 | 0 | 0 | 0 | 0 | 0 | 0 |
| Other Volume [veh/h] | 0 | 0 | 0 | 0 | 0 | 0 | 0 | 0 | 0 | 0 | 0 | 0 |
| Right-Turn on Red Volume [veh/h] | 0 | 0 | 0 | 0 | 0 | 0 | 0 | 0 | 0 | 0 | 0 | 0 |
| Total Hourly Volume [veh/h] | 51 | 437 | 59 | 29 | 244 | 47 | 76 | 231 | 63 | 29 | 154 | 16 |
| Peak Hour Factor | 0.8530 | 0.8530 | 0.8530 | 0.8530 | 0.8530 | 0.8530 | 0.8530 | 0.8530 | 0.8530 | 0.8530 | 0.8530 | 0.8530 |
| Other Adjustment Factor | 1.0000 | 1.0000 | 1.0000 | 1.0000 | 1.0000 | 1.0000 | 1.0000 | 1.0000 | 1.0000 | 1.0000 | 1.0000 | 1.0000 |
| Total 15-Minute Volume [veh/h] | 15 | 128 | 17 | 8 | 72 | 14 | 22 | 68 | 18 | 8 | 45 | 5 |
| Total Analysis Volume [veh/h] | 60 | 512 | 69 | 34 | 286 | 55 | 89 | 271 | 74 | 34 | 181 | 19 |
| Presence of On-Street Parking | No | | No | No | | No | No | | No | No | | No |
| On-Street Parking Maneuver Rate [/h] | 0 | 0 | 0 | 0 | 0 | 0 | 0 | 0 | 0 | 0 | 0 | 0 |
| Local Bus Stopping Rate [/h] | 0 | 0 | 0 | 0 | 0 | 0 | 0 | 0 | 0 | 0 | 0 | 0 |
| Pedestrian Volume [ped/h] | 0 | | | 0 | | | 0 | | | 0 | | |
| Bicycle Volume [bicycles/h] | 0 | | | 0 | | | 0 | | | 0 | | |

**Intersection Settings**

| | |
|---|---|
| Located in CBD | No |
| Signal Coordination Group | - |
| Cycle Length [s] | 100 |
| Coordination Type | Time of Day Pattern Isolated |
| Actuation Type | Fully actuated |
| Offset [s] | 0.0 |
| Offset Reference | LagFO |
| Permissive Mode | SingleBand |
| Lost time [s] | 16.00 |

**Phasing & Timing**

| Control Type | Protecte | Permiss | Permiss | Protecte | Permiss | Permiss | Protecte | Permiss | Permiss | Protecte | Permiss | Permiss |
|---|---|---|---|---|---|---|---|---|---|---|---|---|
| Signal group | 5 | 2 | 0 | 1 | 6 | 0 | 3 | 8 | 0 | 7 | 4 | 0 |
| Auxiliary Signal Groups | | | | | | | | | | | | |
| Lead / Lag | Lead | - | - | Lead | - | - | Lead | - | - | Lead | - | - |
| Minimum Green [s] | 5 | 5 | 0 | 5 | 5 | 0 | 5 | 5 | 0 | 5 | 5 | 0 |
| Maximum Green [s] | 30 | 30 | 0 | 30 | 30 | 0 | 30 | 30 | 0 | 30 | 30 | 0 |
| Amber [s] | 4.4 | 4.4 | 0.0 | 4.4 | 4.4 | 0.0 | 4.1 | 4.1 | 0.0 | 4.1 | 4.1 | 0.0 |
| All red [s] | 1.0 | 1.0 | 0.0 | 1.0 | 1.0 | 0.0 | 1.0 | 1.0 | 0.0 | 1.0 | 1.0 | 0.0 |
| Split [s] | 12 | 38 | 0 | 11 | 37 | 0 | 14 | 39 | 0 | 12 | 37 | 0 |
| Vehicle Extension [s] | 3.0 | 3.0 | 0.0 | 3.0 | 3.0 | 0.0 | 3.0 | 3.0 | 0.0 | 3.0 | 3.0 | 0.0 |
| Walk [s] | 0 | 7 | 0 | 0 | 7 | 0 | 0 | 7 | 0 | 0 | 7 | 0 |
| Pedestrian Clearance [s] | 0 | 24 | 0 | 0 | 24 | 0 | 0 | 24 | 0 | 0 | 24 | 0 |
| I1, Start-Up Lost Time [s] | 2.0 | 2.0 | 0.0 | 2.0 | 2.0 | 0.0 | 2.0 | 2.0 | 0.0 | 2.0 | 2.0 | 0.0 |
| I2, Clearance Lost Time [s] | 3.4 | 3.4 | 0.0 | 3.4 | 3.4 | 0.0 | 3.1 | 3.1 | 0.0 | 3.1 | 3.1 | 0.0 |
| Minimum Recall | No | No | | No | No | | No | No | | No | No | |
| Maximum Recall | No | No | | No | No | | No | No | | No | No | |
| Pedestrian Recall | No | No | | No | No | | No | No | | No | No | |
| Detector Location [ft] | 0.0 | 0.0 | 0.0 | 0.0 | 0.0 | 0.0 | 0.0 | 0.0 | 0.0 | 0.0 | 0.0 | 0.0 |
| Detector Length [ft] | 0.0 | 0.0 | 0.0 | 0.0 | 0.0 | 0.0 | 0.0 | 0.0 | 0.0 | 0.0 | 0.0 | 0.0 |
| I, Upstream Filtering Factor | 1.00 | 1.00 | 1.00 | 1.00 | 1.00 | 1.00 | 1.00 | 1.00 | 1.00 | 1.00 | 1.00 | 1.00 |

**Exclusive Pedestrian Phase**

| | |
|---|---|
| Pedestrian Signal Group | 0 |
| Pedestrian Walk [s] | 0 |
| Pedestrian Clearance [s] | 0 |

**Lane Group Calculations**

| Lane Group | L | C | C | L | C | C | L | C | C | L | C | C |
|---|---|---|---|---|---|---|---|---|---|---|---|---|
| L, Total Lost Time per Cycle [s] | 5.40 | 5.40 | 5.40 | 5.40 | 5.40 | 5.40 | 5.10 | 5.10 | 5.10 | 5.10 | 5.10 | 5.10 |
| l1_p, Permitted Start-Up Lost Time [s] | 0.00 | 0.00 | 0.00 | 0.00 | 0.00 | 0.00 | 0.00 | 0.00 | 0.00 | 0.00 | 0.00 | 0.00 |
| l2, Clearance Lost Time [s] | 3.40 | 3.40 | 3.40 | 3.40 | 3.40 | 3.40 | 3.10 | 3.10 | 3.10 | 3.10 | 3.10 | 3.10 |
| g_i, Effective Green Time [s] | 2 | 9 | 9 | 2 | 8 | 8 | 3 | 6 | 6 | 2 | 5 | 5 |
| g / C, Green / Cycle | 0.06 | 0.23 | 0.23 | 0.04 | 0.21 | 0.21 | 0.08 | 0.16 | 0.16 | 0.04 | 0.12 | 0.12 |
| (v / s)_i Volume / Saturation Flow Rate | 0.03 | 0.16 | 0.16 | 0.02 | 0.09 | 0.10 | 0.05 | 0.10 | 0.10 | 0.02 | 0.05 | 0.06 |
| s, saturation flow rate [veh/h] | 1774 | 1863 | 1786 | 1774 | 1863 | 1761 | 1774 | 1863 | 1728 | 1774 | 1863 | 1802 |
| c, Capacity [veh/h] | 111 | 433 | 415 | 72 | 392 | 371 | 143 | 297 | 276 | 72 | 223 | 216 |
| d1, Uniform Delay [s] | 18.14 | 13.97 | 13.98 | 18.71 | 13.71 | 13.74 | 17.75 | 15.57 | 15.61 | 18.71 | 16.34 | 16.36 |
| k, delay calibration | 0.11 | 0.11 | 0.11 | 0.11 | 0.11 | 0.11 | 0.11 | 0.11 | 0.11 | 0.11 | 0.11 | 0.11 |
| I, Upstream Filtering Factor | 1.00 | 1.00 | 1.00 | 1.00 | 1.00 | 1.00 | 1.00 | 1.00 | 1.00 | 1.00 | 1.00 | 1.00 |
| d2, Incremental Delay [s] | 4.02 | 1.91 | 2.02 | 4.65 | 0.78 | 0.86 | 4.38 | 1.91 | 2.18 | 4.65 | 1.43 | 1.53 |
| d3, Initial Queue Delay [s] | 0.00 | 0.00 | 0.00 | 0.00 | 0.00 | 0.00 | 0.00 | 0.00 | 0.00 | 0.00 | 0.00 | 0.00 |
| Rp, platoon ratio | 1.00 | 1.00 | 1.00 | 1.00 | 1.00 | 1.00 | 1.00 | 1.00 | 1.00 | 1.00 | 1.00 | 1.00 |
| PF, progression factor | 1.00 | 1.00 | 1.00 | 1.00 | 1.00 | 1.00 | 1.00 | 1.00 | 1.00 | 1.00 | 1.00 | 1.00 |

**Lane Group Results**

| | | | | | | | | | | | | |
|---|---|---|---|---|---|---|---|---|---|---|---|---|
| X, volume / capacity | 0.54 | 0.68 | 0.69 | 0.47 | 0.44 | 0.45 | 0.62 | 0.60 | 0.61 | 0.47 | 0.45 | 0.46 |
| d, Delay for Lane Group [s/veh] | 22.16 | 15.88 | 16.00 | 23.36 | 14.49 | 14.60 | 22.14 | 17.48 | 17.79 | 23.36 | 17.77 | 17.88 |
| Lane Group LOS | C | B | B | C | B | B | C | B | B | C | B | B |
| Critical Lane Group | No | No | Yes | Yes | No | No | No | No | Yes | Yes | No | No |
| 50th-Percentile Queue Length [veh] | 0.56 | 2.04 | 1.97 | 0.34 | 1.11 | 1.08 | 0.83 | 1.36 | 1.31 | 0.35 | 0.79 | 0.78 |
| 50th-Percentile Queue Length [ft] | 13.97 | 50.88 | 49.36 | 8.62 | 27.84 | 27.08 | 20.81 | 34.08 | 32.83 | 8.81 | 19.78 | 19.62 |
| 95th-Percentile Queue Length [veh] | 1.01 | 3.66 | 3.55 | 0.62 | 2.00 | 1.95 | 1.50 | 2.45 | 2.36 | 0.63 | 1.42 | 1.41 |
| 95th-Percentile Queue Length [ft] | 25.14 | 91.59 | 88.85 | 15.51 | 50.10 | 48.74 | 37.46 | 61.34 | 59.09 | 15.86 | 35.60 | 35.32 |

**Movement, Approach, & Intersection Results**

| | | | | | | | | | | | | |
|---|---|---|---|---|---|---|---|---|---|---|---|---|
| d_M, Delay for Movement [s/veh] | 22.16 | 15.93 | 16.00 | 23.36 | 14.53 | 14.60 | 22.14 | 17.59 | 17.79 | 23.36 | 17.82 | 17.88 |
| Movement LOS | C | B | B | C | B | B | C | B | B | C | B | B |
| d_A, Approach Delay [s/veh] | 16.52 | | | 15.34 | | | 18.56 | | | 18.63 | | |
| Approach LOS | B | | | B | | | B | | | B | | |
| d_I, Intersection Delay [s/veh] | 17.08 | | | | | | | | | | | |
| Intersection LOS | B | | | | | | | | | | | |
| Intersection V/C | 0.495 | | | | | | | | | | | |

## Sequence

| | | | | | | | | | | | | | | | | |
|---|---|---|---|---|---|---|---|---|---|---|---|---|---|---|---|---|
| Ring 1 | 1 | 2 | 3 | 4 | - | - | - | - | - | - | - | - | - | - | - | - |
| Ring 2 | 5 | 6 | 7 | 8 | - | - | - | - | - | - | - | - | - | - | - | - |
| Ring 3 | - | - | - | - | - | - | - | - | - | - | - | - | - | - | - | - |
| Ring 4 | - | - | - | - | - | - | - | - | - | - | - | - | - | - | - | - |

**Intersection Level Of Service Report**
**Intersection 7: Alder Ave (NS) / Marygold Ave (EW)**

| | | | |
|---|---|---|---|
| Control Type: | All-way stop | Delay (sec / veh): | 41.4 |
| Analysis Method: | HCM 2010 | Level Of Service: | E |
| Analysis Period: | 15 minutes | | |

**Intersection Setup**

| Name | Alder Avenue | | | Alder Avenue | | | Marygold Avenue | | | Marygold Avenue | | |
|---|---|---|---|---|---|---|---|---|---|---|---|---|
| Approach | Northbound | | | Southbound | | | Eastbound | | | Westbound | | |
| Lane Configuration | | | | | | | | | | | | |
| Turning Movement | Left | Thru | Right | Left | Thru | Right | Left | Thru | Right | Left | Thru | Right |
| Lane Width [ft] | 12.00 | 12.00 | 12.00 | 12.00 | 12.00 | 12.00 | 12.00 | 12.00 | 12.00 | 12.00 | 12.00 | 12.00 |
| No. of Lanes in Pocket | 0 | 0 | 1 | 0 | 0 | 0 | 0 | 0 | 0 | 0 | 0 | 0 |
| Pocket Length [ft] | 100.00 | 100.00 | 200.00 | 100.00 | 100.00 | 100.00 | 100.00 | 100.00 | 100.00 | 100.00 | 100.00 | 100.00 |
| Speed [mph] | 40.00 | | | 40.00 | | | 35.00 | | | 25.00 | | |
| Grade [%] | 0.00 | | | 0.00 | | | 0.00 | | | 0.00 | | |
| Crosswalk | Yes | | | Yes | | | Yes | | | Yes | | |

**volumes**

| Name | Alder Avenue | | | Alder Avenue | | | Marygold Avenue | | | Marygold Avenue | | |
|---|---|---|---|---|---|---|---|---|---|---|---|---|
| Base Volume Input [veh/h] | 28 | 367 | 32 | 42 | 242 | 74 | 134 | 127 | 20 | 14 | 76 | 22 |
| Base Volume Adjustment Factor | 1.0000 | 1.0000 | 1.0000 | 1.0000 | 1.0000 | 1.0000 | 1.0000 | 1.0000 | 1.0000 | 1.0000 | 1.0000 | 1.0000 |
| Heavy Vehicles Percentage [%] | 2.00 | 2.00 | 2.00 | 2.00 | 2.00 | 2.00 | 2.00 | 2.00 | 2.00 | 2.00 | 2.00 | 2.00 |
| Growth Rate | 1.00 | 1.00 | 1.00 | 1.00 | 1.00 | 1.00 | 1.00 | 1.00 | 1.00 | 1.00 | 1.00 | 1.00 |
| In-Process Volume [veh/h] | 0 | 0 | 0 | 0 | 0 | 0 | 0 | 0 | 0 | 0 | 0 | 0 |
| Site-Generated Trips [veh/h] | 5 | 61 | 18 | 0 | 41 | 0 | 0 | 13 | 2 | 9 | 10 | 0 |
| Diverted Trips [veh/h] | 0 | 0 | 0 | 0 | 0 | 0 | 0 | 0 | 0 | 0 | 0 | 0 |
| Pass-by Trips [veh/h] | 0 | 0 | 0 | 0 | 0 | 0 | 0 | 0 | 0 | 0 | 0 | 0 |
| Existing Site Adjustment Volume [veh/h] | 0 | 0 | 0 | 0 | 0 | 0 | 0 | 0 | 0 | 0 | 0 | 0 |
| Other Volume [veh/h] | 0 | 0 | 0 | 0 | 0 | 0 | 0 | 0 | 0 | 0 | 0 | 0 |
| Total Hourly Volume [veh/h] | 33 | 428 | 50 | 42 | 283 | 74 | 134 | 140 | 22 | 23 | 86 | 22 |
| Peak Hour Factor | 0.9220 | 0.9220 | 0.9220 | 0.9220 | 0.9220 | 0.9220 | 0.9220 | 0.9220 | 0.9220 | 0.9220 | 0.9220 | 0.9220 |
| Other Adjustment Factor | 1.0000 | 1.0000 | 1.0000 | 1.0000 | 1.0000 | 1.0000 | 1.0000 | 1.0000 | 1.0000 | 1.0000 | 1.0000 | 1.0000 |
| Total 15-Minute Volume [veh/h] | 9 | 116 | 14 | 11 | 77 | 20 | 36 | 38 | 6 | 6 | 23 | 6 |
| Total Analysis Volume [veh/h] | 36 | 464 | 54 | 46 | 307 | 80 | 145 | 152 | 24 | 25 | 93 | 24 |
| Pedestrian Volume [ped/h] | 0 | | | 0 | | | 0 | | | 0 | | |

**Intersection Settings**

**Lanes**

**Movement, Approach, & Intersection Results**

| | | | | | | |
|---|---|---|---|---|---|---|
| 95th-Percentile Queue Length [veh] | 14.72 | 0.33 | 6.22 | 0.53 | 4.80 | 1.36 |
| 95th-Percentile Queue Length [ft] | 368.06 | 8.30 | 155.40 | 13.30 | 119.95 | 34.07 |
| Approach Delay [s/veh] | 70.28 | | 25.93 | | 23.97 | 14.88 |
| Approach LOS | F | | D | | C | B |
| Intersection Delay [s/veh] | 41.36 | | | | | |
| Intersection LOS | E | | | | | |

**Intersection Level Of Service Report**
**Intersection 8: Alder Ave (NS) / Valley Blvd (EW)**

| | | | |
|---|---|---|---|
| Control Type: | Signalized | Delay (sec / veh): | 33.0 |
| Analysis Method: | HCM 2010 | Level Of Service: | C |
| Analysis Period: | 15 minutes | Volume to Capacity (v/c): | 0.815 |

**Intersection Setup**

| Name | Alder Avenue | | | Alder Avenue | | | Valley Boulevard | | | | | |
|---|---|---|---|---|---|---|---|---|---|---|---|---|
| Approach | Northbound | | | Southbound | | | Eastbound | | | Westbound | | |
| Lane Configuration | | | | | | | | | | | | |
| Turning Movement | Left | Thru | Right | Left | Thru | Right | Left | Thru | Right | Left | Thru | Right |
| Lane Width [ft] | 12.00 | 12.00 | 12.00 | 12.00 | 12.00 | 12.00 | 12.00 | 12.00 | 12.00 | 12.00 | 12.00 | 12.00 |
| No. of Lanes in Pocket | 0 | 0 | 1 | 0 | 0 | 0 | 1 | 0 | 0 | 1 | 0 | 0 |
| Pocket Length [ft] | 100.00 | 100.00 | 55.00 | 100.00 | 100.00 | 100.00 | 100.00 | 100.00 | 100.00 | 100.00 | 100.00 | 100.00 |
| Speed [mph] | 40.00 | | | 40.00 | | | 40.00 | | | 30.00 | | |
| Grade [%] | 0.00 | | | 0.00 | | | 0.00 | | | 0.00 | | |
| Crosswalk | Yes | | | Yes | | | Yes | | | Yes | | |

**volumes**

| Name | Alder Avenue | | | Alder Avenue | | | Valley Boulevard | | | | | |
|---|---|---|---|---|---|---|---|---|---|---|---|---|
| Base Volume Input [veh/h] | 35 | 26 | 15 | 123 | 15 | 123 | 272 | 681 | 38 | 6 | 416 | 143 |
| Base Volume Adjustment Factor | 1.0000 | 1.0000 | 1.0000 | 1.0000 | 1.0000 | 1.0000 | 1.0000 | 1.0000 | 1.0000 | 1.0000 | 1.0000 | 1.0000 |
| Heavy Vehicles Percentage [%] | 2.00 | 2.00 | 2.00 | 2.00 | 2.00 | 2.00 | 4.00 | 4.00 | 4.00 | 4.00 | 4.00 | 4.00 |
| Growth Rate | 1.00 | 1.00 | 1.00 | 1.00 | 1.00 | 1.00 | 1.00 | 1.00 | 1.00 | 1.00 | 1.00 | 1.00 |
| In-Process Volume [veh/h] | 0 | 0 | 0 | 0 | 0 | 0 | 0 | 0 | 0 | 0 | 0 | 0 |
| Site-Generated Trips [veh/h] | 13 | 18 | 39 | 49 | 5 | 9 | 11 | 71 | 5 | 12 | 93 | 69 |
| Diverted Trips [veh/h] | 0 | 0 | 0 | 0 | 0 | 0 | 0 | 0 | 0 | 0 | 0 | 0 |
| Pass-by Trips [veh/h] | 0 | 0 | 0 | 0 | 0 | 0 | 0 | 0 | 0 | 0 | 0 | 0 |
| Existing Site Adjustment Volume [veh/h] | 0 | 0 | 0 | 0 | 0 | 0 | 0 | 0 | 0 | 0 | 0 | 0 |
| Other Volume [veh/h] | 0 | 0 | 0 | 0 | 0 | 0 | 0 | 0 | 0 | 0 | 0 | 0 |
| Right-Turn on Red Volume [veh/h] | 0 | 0 | 0 | 0 | 0 | 0 | 0 | 0 | 0 | 0 | 0 | 0 |
| Total Hourly Volume [veh/h] | 48 | 44 | 54 | 172 | 20 | 132 | 283 | 752 | 43 | 18 | 509 | 212 |
| Peak Hour Factor | 0.8890 | 0.8890 | 0.8890 | 0.8890 | 0.8890 | 0.8890 | 0.8890 | 0.8890 | 0.8890 | 0.8890 | 0.8890 | 0.8890 |
| Other Adjustment Factor | 1.0000 | 1.0000 | 1.0000 | 1.0000 | 1.0000 | 1.0000 | 1.0000 | 1.0000 | 1.0000 | 1.0000 | 1.0000 | 1.0000 |
| Total 15-Minute Volume [veh/h] | 13 | 12 | 15 | 48 | 6 | 37 | 80 | 211 | 12 | 5 | 143 | 60 |
| Total Analysis Volume [veh/h] | 54 | 49 | 61 | 193 | 22 | 148 | 318 | 846 | 48 | 20 | 573 | 238 |
| Presence of On-Street Parking | No | | No | No | | No | No | | No | No | | No |
| On-Street Parking Maneuver Rate [/h] | 0 | 0 | 0 | 0 | 0 | 0 | 0 | 0 | 0 | 0 | 0 | 0 |
| Local Bus Stopping Rate [/h] | 0 | 0 | 0 | 0 | 0 | 0 | 0 | 0 | 0 | 0 | 0 | 0 |
| Pedestrian Volume [ped/h] | 0 | | | 0 | | | 0 | | | 0 | | |
| Bicycle Volume [bicycles/h] | 0 | | | 0 | | | 0 | | | 0 | | |

**Intersection Settings**

| | |
|---|---|
| Located in CBD | No |
| Signal Coordination Group | 3 - EW - Valley |
| Cycle Length [s] | 120 |
| Coordination Type | Time of Day Pattern Coordinated |
| Actuation Type | Fully actuated |
| Offset [s] | 45.0 |
| Offset Reference | LagFO |
| Permissive Mode | SingleBand |
| Lost time [s] | 12.00 |

**Phasing & Timing**

| Control Type | Permiss | Permiss | Permiss | Permiss | Permiss | Permiss | Protecte | Permiss | Permiss | Protecte | Permiss | Permiss |
|---|---|---|---|---|---|---|---|---|---|---|---|---|
| Signal group | 0 | 2 | 0 | 0 | 6 | 0 | 3 | 8 | 0 | 7 | 4 | 0 |
| Auxiliary Signal Groups | | | | | | | | | | | | |
| Lead / Lag | - | - | - | - | - | - | Lead | - | - | Lead | - | - |
| Minimum Green [s] | 0 | 5 | 0 | 0 | 5 | 0 | 5 | 5 | 0 | 5 | 5 | 0 |
| Maximum Green [s] | 0 | 30 | 0 | 0 | 30 | 0 | 30 | 30 | 0 | 30 | 30 | 0 |
| Amber [s] | 0.0 | 4.4 | 0.0 | 0.0 | 4.4 | 0.0 | 4.4 | 4.4 | 0.0 | 3.7 | 3.7 | 0.0 |
| All red [s] | 0.0 | 1.0 | 0.0 | 0.0 | 1.0 | 0.0 | 1.0 | 1.0 | 0.0 | 1.0 | 1.0 | 0.0 |
| Split [s] | 0 | 43 | 0 | 0 | 43 | 0 | 38 | 67 | 0 | 10 | 39 | 0 |
| Vehicle Extension [s] | 0.0 | 3.0 | 0.0 | 0.0 | 3.0 | 0.0 | 3.0 | 3.0 | 0.0 | 3.0 | 3.0 | 0.0 |
| Walk [s] | 0 | 7 | 0 | 0 | 7 | 0 | 0 | 7 | 0 | 0 | 7 | 0 |
| Pedestrian Clearance [s] | 0 | 25 | 0 | 0 | 29 | 0 | 0 | 22 | 0 | 0 | 21 | 0 |
| I1, Start-Up Lost Time [s] | 0.0 | 2.0 | 0.0 | 0.0 | 2.0 | 0.0 | 2.0 | 2.0 | 0.0 | 2.0 | 2.0 | 0.0 |
| I2, Clearance Lost Time [s] | 0.0 | 3.4 | 0.0 | 0.0 | 3.4 | 0.0 | 3.4 | 3.4 | 0.0 | 2.7 | 2.7 | 0.0 |
| Minimum Recall | | No | | | No | | No | No | | No | No | |
| Maximum Recall | | No | | | No | | No | No | | No | No | |
| Pedestrian Recall | | No | | | No | | No | No | | No | No | |
| Detector Location [ft] | 0.0 | 0.0 | 0.0 | 0.0 | 0.0 | 0.0 | 0.0 | 0.0 | 0.0 | 0.0 | 0.0 | 0.0 |
| Detector Length [ft] | 0.0 | 0.0 | 0.0 | 0.0 | 0.0 | 0.0 | 0.0 | 0.0 | 0.0 | 0.0 | 0.0 | 0.0 |
| I, Upstream Filtering Factor | 1.00 | 1.00 | 1.00 | 1.00 | 1.00 | 1.00 | 1.00 | 1.00 | 1.00 | 1.00 | 1.00 | 1.00 |

**Exclusive Pedestrian Phase**

| | |
|---|---|
| Pedestrian Signal Group | 0 |
| Pedestrian Walk [s] | 0 |
| Pedestrian Clearance [s] | 0 |

**Lane Group Calculations**

| Lane Group | C | R | C | L | C | C | L | C | C |
|---|---|---|---|---|---|---|---|---|---|
| L, Total Lost Time per Cycle [s] | 5.40 | 5.40 | 5.40 | 5.40 | 5.40 | 5.40 | 4.70 | 4.70 | 4.70 |
| l1_p, Permitted Start-Up Lost Time [s] | 2.00 | 0.00 | 2.00 | 0.00 | 0.00 | 0.00 | 0.00 | 0.00 | 0.00 |
| l2, Clearance Lost Time [s] | 3.40 | 3.40 | 3.40 | 3.40 | 3.40 | 3.40 | 2.70 | 2.70 | 2.70 |
| g_i, Effective Green Time [s] | 38 | 38 | 38 | 24 | 64 | 64 | 2 | 43 | 43 |
| g / C, Green / Cycle | 0.31 | 0.31 | 0.31 | 0.20 | 0.54 | 0.54 | 0.02 | 0.36 | 0.36 |
| (v / s)_i Volume / Saturation Flow Rate | 0.08 | 0.04 | 0.32 | 0.18 | 0.25 | 0.25 | 0.01 | 0.23 | 0.23 |
| s, saturation flow rate [veh/h] | 1303 | 1583 | 1147 | 1740 | 1827 | 1793 | 1740 | 1827 | 1647 |
| c, Capacity [veh/h] | 453 | 495 | 405 | 345 | 981 | 962 | 37 | 657 | 592 |
| d1, Uniform Delay [s] | 30.30 | 29.45 | 45.33 | 43.18 | 9.68 | 9.68 | 57.71 | 25.52 | 25.53 |
| k, delay calibration | 0.11 | 0.11 | 0.44 | 0.19 | 0.50 | 0.50 | 0.11 | 0.50 | 0.50 |
| I, Upstream Filtering Factor | 1.00 | 1.00 | 1.00 | 1.00 | 1.00 | 1.00 | 1.00 | 1.00 | 1.00 |
| d2, Incremental Delay [s] | 0.25 | 0.11 | 22.92 | 15.97 | 1.55 | 1.59 | 11.92 | 4.92 | 5.46 |
| d3, Initial Queue Delay [s] | 0.00 | 0.00 | 0.00 | 0.00 | 0.00 | 0.00 | 0.00 | 0.00 | 0.00 |
| Rp, platoon ratio | 1.00 | 1.00 | 1.00 | 1.33 | 1.33 | 1.33 | 1.33 | 1.33 | 1.33 |
| PF, progression factor | 1.00 | 1.00 | 1.00 | 1.00 | 1.00 | 1.00 | 1.00 | 1.00 | 1.00 |

**Lane Group Results**

| | | | | | | | | | |
|---|---|---|---|---|---|---|---|---|---|
| X, volume / capacity | 0.23 | 0.12 | 0.90 | 0.92 | 0.46 | 0.46 | 0.54 | 0.65 | 0.65 |
| d, Delay for Lane Group [s/veh] | 30.55 | 29.56 | 68.24 | 59.15 | 11.23 | 11.27 | 69.63 | 30.43 | 31.00 |
| Lane Group LOS | C | C | E | E | B | B | E | C | C |
| Critical Lane Group | No | No | Yes | Yes | No | No | No | No | Yes |
| 50th-Percentile Queue Length [veh] | 2.20 | 1.26 | 13.11 | 9.96 | 4.36 | 4.30 | 0.72 | 9.26 | 8.46 |
| 50th-Percentile Queue Length [ft] | 54.92 | 31.39 | 327.63 | 249.07 | 109.12 | 107.42 | 17.99 | 231.47 | 211.54 |
| 95th-Percentile Queue Length [veh] | 3.95 | 2.26 | 19.04 | 15.14 | 7.79 | 7.70 | 1.29 | 14.25 | 13.23 |
| 95th-Percentile Queue Length [ft] | 98.86 | 56.51 | 476.05 | 378.48 | 194.77 | 192.41 | 32.37 | 356.23 | 330.80 |

**Movement, Approach, & Intersection Results**

| | | | | | | | | | | | | |
|---|---|---|---|---|---|---|---|---|---|---|---|---|
| d_M, Delay for Movement [s/veh] | 30.55 | 30.55 | 29.56 | 68.24 | 68.24 | 68.24 | 59.15 | 11.25 | 11.27 | 69.63 | 30.58 | 31.00 |
| Movement LOS | C | C | C | E | E | E | E | B | B | E | C | C |
| d_A, Approach Delay [s/veh] | 30.18 | | | 68.24 | | | 23.82 | | | 31.64 | | |
| Approach LOS | C | | | E | | | C | | | C | | |
| d_I, Intersection Delay [s/veh] | 33.03 | | | | | | | | | | | |
| Intersection LOS | C | | | | | | | | | | | |
| Intersection V/C | 0.815 | | | | | | | | | | | |

## Sequence

| | | | | | | | | | | | | | | | | |
|---|---|---|---|---|---|---|---|---|---|---|---|---|---|---|---|---|
| Ring 1 | 2 | 3 | 4 | - | - | - | - | - | - | - | - | - | - | - | - | - |
| Ring 2 | 6 | 7 | 8 | - | - | - | - | - | - | - | - | - | - | - | - | - |
| Ring 3 | - | - | - | - | - | - | - | - | - | - | - | - | - | - | - | - |
| Ring 4 | - | - | - | - | - | - | - | - | - | - | - | - | - | - | - | - |

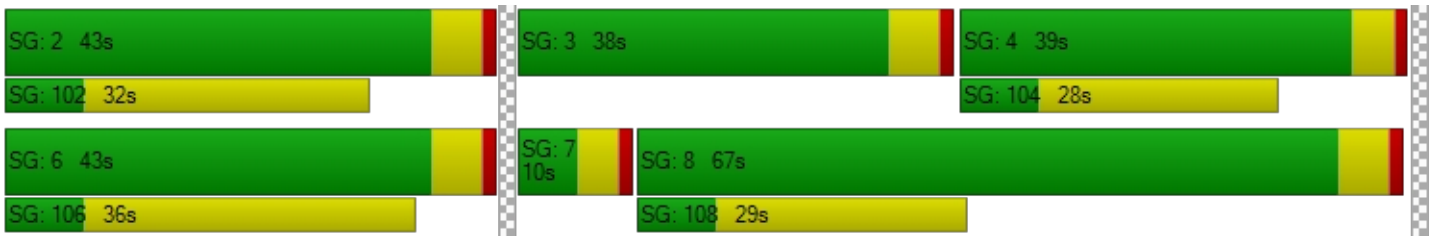

**Intersection Level Of Service Report**
**Intersection 9: Locust Ave (NS) / Marygold Ave (EW)**

| | | | |
|---|---|---|---|
| Control Type: | All-way stop | Delay (sec / veh): | 12.9 |
| Analysis Method: | HCM 2010 | Level Of Service: | B |
| Analysis Period: | 15 minutes | | |

**Intersection Setup**

| Name | Locust Avenue | | | Locust Avenue | | | Marygold Avenue | | | | | |
|---|---|---|---|---|---|---|---|---|---|---|---|---|
| Approach | Northbound | | | Southbound | | | Eastbound | | | Westbound | | |
| Lane Configuration | | | | | | | | | | | | |
| Turning Movement | Left | Thru | Right | Left | Thru | Right | Left | Thru | Right | Left | Thru | Right |
| Lane Width [ft] | 12.00 | 12.00 | 12.00 | 12.00 | 12.00 | 12.00 | 12.00 | 12.00 | 12.00 | 12.00 | 12.00 | 12.00 |
| No. of Lanes in Pocket | 0 | 0 | 1 | 0 | 0 | 1 | 0 | 0 | 0 | 0 | 0 | 0 |
| Pocket Length [ft] | 100.00 | 100.00 | 100.00 | 100.00 | 100.00 | 325.00 | 100.00 | 100.00 | 100.00 | 100.00 | 100.00 | 100.00 |
| Speed [mph] | 30.00 | | | 40.00 | | | 30.00 | | | 30.00 | | |
| Grade [%] | 0.00 | | | 0.00 | | | 0.00 | | | 0.00 | | |
| Crosswalk | Yes | | | Yes | | | Yes | | | Yes | | |

**volumes**

| Name | Locust Avenue | | | Locust Avenue | | | Marygold Avenue | | | | | |
|---|---|---|---|---|---|---|---|---|---|---|---|---|
| Base Volume Input [veh/h] | 19 | 260 | 29 | 12 | 128 | 34 | 55 | 96 | 17 | 5 | 44 | 9 |
| Base Volume Adjustment Factor | 1.0000 | 1.0000 | 1.0000 | 1.0000 | 1.0000 | 1.0000 | 1.0000 | 1.0000 | 1.0000 | 1.0000 | 1.0000 | 1.0000 |
| Heavy Vehicles Percentage [%] | 2.00 | 2.00 | 2.00 | 2.00 | 2.00 | 2.00 | 2.00 | 2.00 | 2.00 | 2.00 | 2.00 | 2.00 |
| Growth Rate | 1.00 | 1.00 | 1.00 | 1.00 | 1.00 | 1.00 | 1.00 | 1.00 | 1.00 | 1.00 | 1.00 | 1.00 |
| In-Process Volume [veh/h] | 0 | 0 | 0 | 0 | 0 | 0 | 0 | 0 | 0 | 0 | 0 | 0 |
| Site-Generated Trips [veh/h] | 48 | 15 | 13 | 0 | 10 | 0 | 0 | 6 | 43 | 11 | 4 | 0 |
| Diverted Trips [veh/h] | 0 | 0 | 0 | 0 | 0 | 0 | 0 | 0 | 0 | 0 | 0 | 0 |
| Pass-by Trips [veh/h] | 0 | 0 | 0 | 0 | 0 | 0 | 0 | 0 | 0 | 0 | 0 | 0 |
| Existing Site Adjustment Volume [veh/h] | 0 | 0 | 0 | 0 | 0 | 0 | 0 | 0 | 0 | 0 | 0 | 0 |
| Other Volume [veh/h] | 0 | 0 | 0 | 0 | 0 | 0 | 0 | 0 | 0 | 0 | 0 | 0 |
| Total Hourly Volume [veh/h] | 67 | 275 | 42 | 12 | 138 | 34 | 55 | 102 | 60 | 16 | 48 | 9 |
| Peak Hour Factor | 0.9500 | 0.9500 | 0.9500 | 0.9500 | 0.9500 | 0.9500 | 0.9500 | 0.9500 | 0.9500 | 0.9500 | 0.9500 | 0.9500 |
| Other Adjustment Factor | 1.0000 | 1.0000 | 1.0000 | 1.0000 | 1.0000 | 1.0000 | 1.0000 | 1.0000 | 1.0000 | 1.0000 | 1.0000 | 1.0000 |
| Total 15-Minute Volume [veh/h] | 18 | 72 | 11 | 3 | 36 | 9 | 14 | 27 | 16 | 4 | 13 | 2 |
| Total Analysis Volume [veh/h] | 71 | 289 | 44 | 13 | 145 | 36 | 58 | 107 | 63 | 17 | 51 | 9 |
| Pedestrian Volume [ped/h] | 0 | | | 0 | | | 0 | | | 0 | | |

**Intersection Settings**

**Lanes**

**Movement, Approach, & Intersection Results**

| | | | | | | |
|---|---|---|---|---|---|---|
| 95th-Percentile Queue Length [veh] | 3.74 | 0.20 | 1.06 | 0.17 | 1.58 | 0.43 |
| 95th-Percentile Queue Length [ft] | 93.43 | 4.88 | 26.51 | 4.18 | 39.39 | 10.86 |
| Approach Delay [s/veh] | 15.38 | | 10.41 | | 11.51 | 9.81 |
| Approach LOS | C | | B | | B | A |
| Intersection Delay [s/veh] | 12.86 | | | | | |
| Intersection LOS | B | | | | | |

**Intersection Level Of Service Report**
**Intersection 10: Locust Ave (NS) / Valley Blvd (EW)**

| | | | |
|---|---|---|---|
| Control Type: | Signalized | Delay (sec / veh): | 22.9 |
| Analysis Method: | HCM 2010 | Level Of Service: | C |
| Analysis Period: | 15 minutes | Volume to Capacity (v/c): | 0.682 |

**Intersection Setup**

| Name | Locust Avenue | | | Locust Avenue | | | Valley Boulevard | | | Valley Boulevard | | |
|---|---|---|---|---|---|---|---|---|---|---|---|---|
| Approach | Northbound | | | Southbound | | | Eastbound | | | Westbound | | |
| Lane Configuration | | | | | | | | | | | | |
| Turning Movement | Left | Thru | Right | Left | Thru | Right | Left | Thru | Right | Left | Thru | Right |
| Lane Width [ft] | 12.00 | 12.00 | 12.00 | 12.00 | 12.00 | 12.00 | 12.00 | 12.00 | 12.00 | 12.00 | 12.00 | 12.00 |
| No. of Lanes in Pocket | 0 | 0 | 0 | 0 | 0 | 0 | 1 | 0 | 0 | 1 | 0 | 0 |
| Pocket Length [ft] | 100.00 | 100.00 | 100.00 | 100.00 | 100.00 | 100.00 | 100.00 | 100.00 | 100.00 | 200.00 | 100.00 | 100.00 |
| Speed [mph] | 30.00 | | | 40.00 | | | 45.00 | | | 45.00 | | |
| Grade [%] | 0.00 | | | 0.00 | | | 0.00 | | | 0.00 | | |
| Crosswalk | Yes | | | Yes | | | No | | | Yes | | |

**volumes**

| Name | Locust Avenue | | | Locust Avenue | | | Valley Boulevard | | | Valley Boulevard | | |
|---|---|---|---|---|---|---|---|---|---|---|---|---|
| Base Volume Input [veh/h] | 12 | 10 | 37 | 78 | 7 | 48 | 159 | 722 | 17 | 71 | 505 | 126 |
| Base Volume Adjustment Factor | 1.0000 | 1.0000 | 1.0000 | 1.0000 | 1.0000 | 1.0000 | 1.0000 | 1.0000 | 1.0000 | 1.0000 | 1.0000 | 1.0000 |
| Heavy Vehicles Percentage [%] | 2.00 | 2.00 | 2.00 | 2.00 | 2.00 | 2.00 | 4.00 | 4.00 | 4.00 | 4.00 | 4.00 | 4.00 |
| Growth Rate | 1.00 | 1.00 | 1.00 | 1.00 | 1.00 | 1.00 | 1.00 | 1.00 | 1.00 | 1.00 | 1.00 | 1.00 |
| In-Process Volume [veh/h] | 0 | 0 | 0 | 0 | 0 | 0 | 0 | 0 | 0 | 0 | 0 | 0 |
| Site-Generated Trips [veh/h] | 0 | 5 | 53 | 60 | 3 | 16 | 18 | 238 | 0 | 18 | 245 | 72 |
| Diverted Trips [veh/h] | 0 | 0 | 0 | 0 | 0 | 0 | 0 | 0 | 0 | 0 | 0 | 0 |
| Pass-by Trips [veh/h] | 0 | 0 | 0 | 0 | 0 | 0 | 0 | 0 | 0 | 0 | 0 | 0 |
| Existing Site Adjustment Volume [veh/h] | 0 | 0 | 0 | 0 | 0 | 0 | 0 | 0 | 0 | 0 | 0 | 0 |
| Other Volume [veh/h] | 0 | 0 | 0 | 0 | 0 | 0 | 0 | 0 | 0 | 0 | 0 | 0 |
| Right-Turn on Red Volume [veh/h] | 0 | 0 | 0 | 0 | 0 | 0 | 0 | 0 | 0 | 0 | 0 | 0 |
| Total Hourly Volume [veh/h] | 12 | 15 | 90 | 138 | 10 | 64 | 177 | 960 | 17 | 89 | 750 | 198 |
| Peak Hour Factor | 0.9100 | 0.9100 | 0.9100 | 0.9100 | 0.9100 | 0.9100 | 0.9100 | 0.9100 | 0.9100 | 0.9100 | 0.9100 | 0.9100 |
| Other Adjustment Factor | 1.0000 | 1.0000 | 1.0000 | 1.0000 | 1.0000 | 1.0000 | 1.0000 | 1.0000 | 1.0000 | 1.0000 | 1.0000 | 1.0000 |
| Total 15-Minute Volume [veh/h] | 3 | 4 | 25 | 38 | 3 | 18 | 49 | 264 | 5 | 24 | 206 | 54 |
| Total Analysis Volume [veh/h] | 13 | 16 | 99 | 152 | 11 | 70 | 195 | 1055 | 19 | 98 | 824 | 218 |
| Presence of On-Street Parking | No | | No | No | | No | No | | No | No | | No |
| On-Street Parking Maneuver Rate [/h] | 0 | 0 | 0 | 0 | 0 | 0 | 0 | 0 | 0 | 0 | 0 | 0 |
| Local Bus Stopping Rate [/h] | 0 | 0 | 0 | 0 | 0 | 0 | 0 | 0 | 0 | 0 | 0 | 0 |
| Pedestrian Volume [ped/h] | 0 | | | 0 | | | 0 | | | 0 | | |
| Bicycle Volume [bicycles/h] | 0 | | | 0 | | | 0 | | | 0 | | |

**Intersection Settings**

| | |
|---|---|
| Located in CBD | No |
| Signal Coordination Group | 3 - EW - Valley |
| Cycle Length [s] | 120 |
| Coordination Type | Time of Day Pattern Coordinated |
| Actuation Type | Fully actuated |
| Offset [s] | 115.0 |
| Offset Reference | LagFO |
| Permissive Mode | SingleBand |
| Lost time [s] | 12.00 |

**Phasing & Timing**

| Control Type | Permiss | Permiss | Permiss | Permiss | Permiss | Permiss | Protecte | Permiss | Permiss | Protecte | Permiss | Permiss |
|---|---|---|---|---|---|---|---|---|---|---|---|---|
| Signal group | 0 | 2 | 0 | 0 | 6 | 0 | 3 | 8 | 0 | 7 | 4 | 0 |
| Auxiliary Signal Groups | | | | | | | | | | | | |
| Lead / Lag | - | - | - | - | - | - | Lead | - | - | Lead | - | - |
| Minimum Green [s] | 0 | 5 | 0 | 0 | 5 | 0 | 5 | 5 | 0 | 5 | 5 | 0 |
| Maximum Green [s] | 0 | 30 | 0 | 0 | 30 | 0 | 30 | 30 | 0 | 30 | 30 | 0 |
| Amber [s] | 0.0 | 3.7 | 0.0 | 0.0 | 4.4 | 0.0 | 4.8 | 4.8 | 0.0 | 4.8 | 4.8 | 0.0 |
| All red [s] | 0.0 | 1.0 | 0.0 | 0.0 | 1.0 | 0.0 | 1.0 | 1.0 | 0.0 | 1.0 | 1.0 | 0.0 |
| Split [s] | 0 | 38 | 0 | 0 | 38 | 0 | 23 | 67 | 0 | 15 | 59 | 0 |
| Vehicle Extension [s] | 0.0 | 3.0 | 0.0 | 0.0 | 3.0 | 0.0 | 3.0 | 3.0 | 0.0 | 3.0 | 3.0 | 0.0 |
| Walk [s] | 0 | 7 | 0 | 0 | 7 | 0 | 0 | 7 | 0 | 0 | 7 | 0 |
| Pedestrian Clearance [s] | 0 | 26 | 0 | 0 | 10 | 0 | 0 | 16 | 0 | 0 | 19 | 0 |
| I1, Start-Up Lost Time [s] | 0.0 | 2.0 | 0.0 | 0.0 | 2.0 | 0.0 | 2.0 | 2.0 | 0.0 | 2.0 | 2.0 | 0.0 |
| I2, Clearance Lost Time [s] | 0.0 | 2.7 | 0.0 | 0.0 | 3.4 | 0.0 | 3.8 | 3.8 | 0.0 | 3.8 | 3.8 | 0.0 |
| Minimum Recall | | No | | | No | | No | No | | No | No | |
| Maximum Recall | | No | | | No | | No | No | | No | No | |
| Pedestrian Recall | | No | | | No | | No | No | | No | No | |
| Detector Location [ft] | 0.0 | 0.0 | 0.0 | 0.0 | 0.0 | 0.0 | 0.0 | 0.0 | 0.0 | 0.0 | 0.0 | 0.0 |
| Detector Length [ft] | 0.0 | 0.0 | 0.0 | 0.0 | 0.0 | 0.0 | 0.0 | 0.0 | 0.0 | 0.0 | 0.0 | 0.0 |
| I, Upstream Filtering Factor | 1.00 | 1.00 | 1.00 | 1.00 | 1.00 | 1.00 | 1.00 | 1.00 | 1.00 | 1.00 | 1.00 | 1.00 |

**Exclusive Pedestrian Phase**

| | |
|---|---|
| Pedestrian Signal Group | 0 |
| Pedestrian Walk [s] | 0 |
| Pedestrian Clearance [s] | 0 |

**Lane Group Calculations**

| Lane Group | C | C | L | C | C | L | C | C |
|---|---|---|---|---|---|---|---|---|
| L, Total Lost Time per Cycle [s] | 4.70 | 5.40 | 5.80 | 5.80 | 5.80 | 5.80 | 5.80 | 5.80 |
| l1_p, Permitted Start-Up Lost Time [s] | 2.00 | 2.00 | 0.00 | 0.00 | 0.00 | 0.00 | 0.00 | 0.00 |
| l2, Clearance Lost Time [s] | 0.00 | 3.40 | 3.80 | 3.80 | 3.80 | 3.80 | 3.80 | 3.80 |
| g_i, Effective Green Time [s] | 28 | 27 | 15 | 68 | 68 | 8 | 61 | 61 |
| g / C, Green / Cycle | 0.23 | 0.23 | 0.13 | 0.56 | 0.56 | 0.07 | 0.51 | 0.51 |
| (v / s)_i Volume / Saturation Flow Rate | 0.08 | 0.21 | 0.11 | 0.29 | 0.29 | 0.06 | 0.30 | 0.30 |
| s, saturation flow rate [veh/h] | 1694 | 1135 | 1740 | 1827 | 1816 | 1740 | 1827 | 1697 |
| c, Capacity [veh/h] | 398 | 306 | 222 | 1028 | 1022 | 121 | 922 | 856 |
| d1, Uniform Delay [s] | 38.42 | 47.14 | 48.86 | 8.37 | 8.37 | 53.62 | 12.85 | 12.86 |
| k, delay calibration | 0.11 | 0.25 | 0.12 | 0.50 | 0.50 | 0.11 | 0.50 | 0.50 |
| I, Upstream Filtering Factor | 1.00 | 1.00 | 1.00 | 1.00 | 1.00 | 1.00 | 1.00 | 1.00 |
| d2, Incremental Delay [s] | 0.46 | 8.80 | 11.11 | 1.91 | 1.92 | 11.81 | 2.72 | 2.93 |
| d3, Initial Queue Delay [s] | 0.00 | 0.00 | 0.00 | 0.00 | 0.00 | 0.00 | 0.00 | 0.00 |
| Rp, platoon ratio | 1.00 | 1.00 | 1.33 | 1.33 | 1.33 | 1.33 | 1.33 | 1.33 |
| PF, progression factor | 1.00 | 1.00 | 1.00 | 1.00 | 1.00 | 1.00 | 1.00 | 1.00 |

**Lane Group Results**

| | | | | | | | | |
|---|---|---|---|---|---|---|---|---|
| X, volume / capacity | 0.32 | 0.76 | 0.88 | 0.52 | 0.52 | 0.81 | 0.59 | 0.59 |
| d, Delay for Lane Group [s/veh] | 38.88 | 55.94 | 59.97 | 10.28 | 10.29 | 65.43 | 15.56 | 15.79 |
| Lane Group LOS | D | E | E | B | B | E | B | B |
| Critical Lane Group | No | Yes | Yes | No | No | No | No | Yes |
| 50th-Percentile Queue Length [veh] | 3.21 | 7.42 | 5.98 | 4.60 | 4.58 | 3.17 | 6.41 | 6.02 |
| 50th-Percentile Queue Length [ft] | 80.25 | 185.59 | 149.55 | 115.08 | 114.53 | 79.32 | 160.30 | 150.55 |
| 95th-Percentile Queue Length [veh] | 5.78 | 11.89 | 9.99 | 8.12 | 8.09 | 5.71 | 10.56 | 10.05 |
| 95th-Percentile Queue Length [ft] | 144.44 | 297.30 | 249.82 | 203.04 | 202.29 | 142.77 | 264.12 | 251.16 |

**Movement, Approach, & Intersection Results**

| | | | | | | | | | | | | |
|---|---|---|---|---|---|---|---|---|---|---|---|---|
| d_M, Delay for Movement [s/veh] | 38.88 | 38.88 | 38.88 | 55.94 | 55.94 | 55.94 | 59.97 | 10.29 | 10.29 | 65.43 | 15.64 | 15.79 |
| Movement LOS | D | D | D | E | E | E | E | B | B | E | B | B |
| d_A, Approach Delay [s/veh] | 38.88 | | | 55.94 | | | 17.92 | | | 19.95 | | |
| Approach LOS | D | | | E | | | B | | | B | | |
| d_I, Intersection Delay [s/veh] | 22.92 | | | | | | | | | | | |
| Intersection LOS | C | | | | | | | | | | | |
| Intersection V/C | 0.682 | | | | | | | | | | | |

## Sequence

| | | | | | | | | | | | | | | | | |
|---|---|---|---|---|---|---|---|---|---|---|---|---|---|---|---|---|
| Ring 1 | 2 | 3 | 4 | - | - | - | - | - | - | - | - | - | - | - | - | - |
| Ring 2 | 6 | 7 | 8 | - | - | - | - | - | - | - | - | - | - | - | - | - |
| Ring 3 | - | - | - | - | - | - | - | - | - | - | - | - | - | - | - | - |
| Ring 4 | - | - | - | - | - | - | - | - | - | - | - | - | - | - | - | - |

**Intersection Level Of Service Report**
**Intersection 11: Cedar Ave (NS) / San Bernardino Ave (EW)**

| | | | |
|---|---|---|---|
| Control Type: | Signalized | Delay (sec / veh): | 16.7 |
| Analysis Method: | HCM 2010 | Level Of Service: | B |
| Analysis Period: | 15 minutes | Volume to Capacity (v/c): | 0.511 |

**Intersection Setup**

| Name | Cedar Avenue | | | Cedar Avenue | | | | | | San Bernardino Avenue | | |
|---|---|---|---|---|---|---|---|---|---|---|---|---|
| Approach | Northbound | | | Southbound | | | Eastbound | | | Westbound | | |
| Lane Configuration | | | | | | | | | | | | |
| Turning Movement | Left | Thru | Right | Left | Thru | Right | Left | Thru | Right | Left | Thru | Right |
| Lane Width [ft] | 12.00 | 12.00 | 12.00 | 12.00 | 12.00 | 12.00 | 12.00 | 12.00 | 12.00 | 12.00 | 12.00 | 12.00 |
| No. of Lanes in Pocket | 1 | 0 | 0 | 1 | 0 | 0 | 1 | 0 | 1 | 1 | 0 | 0 |
| Pocket Length [ft] | 125.00 | 100.00 | 100.00 | 125.00 | 100.00 | 100.00 | 100.00 | 100.00 | 100.00 | 100.00 | 100.00 | 100.00 |
| Speed [mph] | 40.00 | | | 40.00 | | | 30.00 | | | 40.00 | | |
| Grade [%] | 0.00 | | | 0.00 | | | 0.00 | | | 0.00 | | |
| Crosswalk | Yes | | | Yes | | | Yes | | | Yes | | |

**volumes**

| Name | Cedar Avenue | | | Cedar Avenue | | | | | | San Bernardino Avenue | | |
|---|---|---|---|---|---|---|---|---|---|---|---|---|
| Base Volume Input [veh/h] | 37 | 907 | 53 | 39 | 744 | 35 | 36 | 151 | 50 | 30 | 106 | 47 |
| Base Volume Adjustment Factor | 1.0000 | 1.0000 | 1.0000 | 1.0000 | 1.0000 | 1.0000 | 1.0000 | 1.0000 | 1.0000 | 1.0000 | 1.0000 | 1.0000 |
| Heavy Vehicles Percentage [%] | 4.00 | 4.00 | 4.00 | 4.00 | 4.00 | 4.00 | 2.00 | 2.00 | 2.00 | 2.00 | 2.00 | 2.00 |
| Growth Rate | 1.00 | 1.00 | 1.00 | 1.00 | 1.00 | 1.00 | 1.00 | 1.00 | 1.00 | 1.00 | 1.00 | 1.00 |
| In-Process Volume [veh/h] | 0 | 0 | 0 | 0 | 0 | 0 | 0 | 0 | 0 | 0 | 0 | 0 |
| Site-Generated Trips [veh/h] | 0 | 25 | 0 | 0 | 21 | 3 | 2 | 0 | 1 | 0 | 0 | 0 |
| Diverted Trips [veh/h] | 0 | 0 | 0 | 0 | 0 | 0 | 0 | 0 | 0 | 0 | 0 | 0 |
| Pass-by Trips [veh/h] | 0 | 0 | 0 | 0 | 0 | 0 | 0 | 0 | 0 | 0 | 0 | 0 |
| Existing Site Adjustment Volume [veh/h] | 0 | 0 | 0 | 0 | 0 | 0 | 0 | 0 | 0 | 0 | 0 | 0 |
| Other Volume [veh/h] | 0 | 0 | 0 | 0 | 0 | 0 | 0 | 0 | 0 | 0 | 0 | 0 |
| Right-Turn on Red Volume [veh/h] | 0 | 0 | 0 | 0 | 0 | 0 | 0 | 0 | 0 | 0 | 0 | 0 |
| Total Hourly Volume [veh/h] | 37 | 932 | 53 | 39 | 765 | 38 | 38 | 151 | 51 | 30 | 106 | 47 |
| Peak Hour Factor | 0.8870 | 0.8870 | 0.8870 | 0.8870 | 0.8870 | 0.8870 | 0.8870 | 0.8870 | 0.8870 | 0.8870 | 0.8870 | 0.8870 |
| Other Adjustment Factor | 1.0000 | 1.0000 | 1.0000 | 1.0000 | 1.0000 | 1.0000 | 1.0000 | 1.0000 | 1.0000 | 1.0000 | 1.0000 | 1.0000 |
| Total 15-Minute Volume [veh/h] | 10 | 263 | 15 | 11 | 216 | 11 | 11 | 43 | 14 | 8 | 30 | 13 |
| Total Analysis Volume [veh/h] | 42 | 1051 | 60 | 44 | 862 | 43 | 43 | 170 | 57 | 34 | 120 | 53 |
| Presence of On-Street Parking | No | | No | No | | No | No | | No | No | | No |
| On-Street Parking Maneuver Rate [/h] | 0 | 0 | 0 | 0 | 0 | 0 | 0 | 0 | 0 | 0 | 0 | 0 |
| Local Bus Stopping Rate [/h] | 0 | 0 | 0 | 0 | 0 | 0 | 0 | 0 | 0 | 0 | 0 | 0 |
| Pedestrian Volume [ped/h] | 0 | | | 0 | | | 0 | | | 0 | | |
| Bicycle Volume [bicycles/h] | 0 | | | 0 | | | 0 | | | 0 | | |

**Intersection Settings**

| | |
|---|---|
| Located in CBD | No |
| Signal Coordination Group | 2 - NS - Cedar |
| Cycle Length [s] | 120 |
| Coordination Type | Time of Day Pattern Coordinated |
| Actuation Type | Fully actuated |
| Offset [s] | 0.0 |
| Offset Reference | LagFO |
| Permissive Mode | SingleBand |
| Lost time [s] | 16.00 |

**Phasing & Timing**

| Control Type | Protecte | Permiss | Permiss | Protecte | Permiss | Permiss | Protecte | Permiss | Permiss | Protecte | Permiss | Permiss |
|---|---|---|---|---|---|---|---|---|---|---|---|---|
| Signal group | 5 | 2 | 0 | 1 | 6 | 0 | 3 | 8 | 0 | 7 | 4 | 0 |
| Auxiliary Signal Groups | | | | | | | | | | | | |
| Lead / Lag | Lead | - | - | Lead | - | - | Lead | - | - | Lead | - | - |
| Minimum Green [s] | 5 | 5 | 0 | 5 | 5 | 0 | 5 | 5 | 0 | 5 | 5 | 0 |
| Maximum Green [s] | 30 | 30 | 0 | 30 | 30 | 0 | 30 | 30 | 0 | 30 | 30 | 0 |
| Amber [s] | 4.4 | 4.4 | 0.0 | 4.4 | 4.4 | 0.0 | 3.7 | 3.7 | 0.0 | 4.4 | 4.4 | 0.0 |
| All red [s] | 1.0 | 1.0 | 0.0 | 1.0 | 1.0 | 0.0 | 1.0 | 1.0 | 0.0 | 1.0 | 1.0 | 0.0 |
| Split [s] | 11 | 57 | 0 | 11 | 57 | 0 | 10 | 41 | 0 | 11 | 42 | 0 |
| Vehicle Extension [s] | 3.0 | 3.0 | 0.0 | 3.0 | 3.0 | 0.0 | 3.0 | 3.0 | 0.0 | 3.0 | 3.0 | 0.0 |
| Walk [s] | 0 | 7 | 0 | 0 | 7 | 0 | 0 | 7 | 0 | 0 | 7 | 0 |
| Pedestrian Clearance [s] | 0 | 24 | 0 | 0 | 24 | 0 | 0 | 29 | 0 | 0 | 29 | 0 |
| I1, Start-Up Lost Time [s] | 2.0 | 2.0 | 0.0 | 2.0 | 2.0 | 0.0 | 2.0 | 2.0 | 0.0 | 2.0 | 2.0 | 0.0 |
| I2, Clearance Lost Time [s] | 3.4 | 3.4 | 0.0 | 3.4 | 3.4 | 0.0 | 2.7 | 2.7 | 0.0 | 3.4 | 3.4 | 0.0 |
| Minimum Recall | No | No | | No | No | | No | No | | No | No | |
| Maximum Recall | No | No | | No | No | | No | No | | No | No | |
| Pedestrian Recall | No | No | | No | No | | No | No | | No | No | |
| Detector Location [ft] | 0.0 | 0.0 | 0.0 | 0.0 | 0.0 | 0.0 | 0.0 | 0.0 | 0.0 | 0.0 | 0.0 | 0.0 |
| Detector Length [ft] | 0.0 | 0.0 | 0.0 | 0.0 | 0.0 | 0.0 | 0.0 | 0.0 | 0.0 | 0.0 | 0.0 | 0.0 |
| I, Upstream Filtering Factor | 1.00 | 1.00 | 1.00 | 1.00 | 1.00 | 1.00 | 1.00 | 1.00 | 1.00 | 1.00 | 1.00 | 1.00 |

**Exclusive Pedestrian Phase**

| | |
|---|---|
| Pedestrian Signal Group | 0 |
| Pedestrian Walk [s] | 0 |
| Pedestrian Clearance [s] | 0 |

**Lane Group Calculations**

| Lane Group | L | C | C | L | C | C | L | C | R | L | C | C |
|---|---|---|---|---|---|---|---|---|---|---|---|---|
| L, Total Lost Time per Cycle [s] | 5.40 | 5.40 | 5.40 | 5.40 | 5.40 | 5.40 | 4.70 | 4.70 | 4.70 | 5.40 | 5.40 | 5.40 |
| l1_p, Permitted Start-Up Lost Time [s] | 0.00 | 0.00 | 0.00 | 0.00 | 0.00 | 0.00 | 0.00 | 0.00 | 0.00 | 0.00 | 0.00 | 0.00 |
| l2, Clearance Lost Time [s] | 3.40 | 3.40 | 3.40 | 3.40 | 3.40 | 3.40 | 2.70 | 2.70 | 2.70 | 3.40 | 3.40 | 3.40 |
| g_i, Effective Green Time [s] | 4 | 79 | 79 | 4 | 79 | 79 | 4 | 13 | 13 | 3 | 13 | 13 |
| g / C, Green / Cycle | 0.03 | 0.65 | 0.65 | 0.03 | 0.66 | 0.66 | 0.03 | 0.11 | 0.11 | 0.03 | 0.11 | 0.11 |
| (v / s)_i Volume / Saturation Flow Rate | 0.02 | 0.31 | 0.31 | 0.03 | 0.25 | 0.25 | 0.02 | 0.09 | 0.04 | 0.02 | 0.05 | 0.05 |
| s, saturation flow rate [veh/h] | 1740 | 1827 | 1792 | 1740 | 1827 | 1797 | 1774 | 1863 | 1583 | 1774 | 1863 | 1678 |
| c, Capacity [veh/h] | 55 | 1195 | 1173 | 57 | 1197 | 1177 | 57 | 206 | 175 | 51 | 199 | 179 |
| d1, Uniform Delay [s] | 57.01 | 3.15 | 3.16 | 56.99 | 2.98 | 2.98 | 57.62 | 52.28 | 49.28 | 57.73 | 50.26 | 50.43 |
| k, delay calibration | 0.11 | 0.50 | 0.50 | 0.11 | 0.50 | 0.50 | 0.11 | 0.11 | 0.11 | 0.11 | 0.11 | 0.11 |
| I, Upstream Filtering Factor | 1.00 | 1.00 | 1.00 | 1.00 | 1.00 | 1.00 | 1.00 | 1.00 | 1.00 | 1.00 | 1.00 | 1.00 |
| d2, Incremental Delay [s] | 18.75 | 1.32 | 1.35 | 19.98 | 0.92 | 0.94 | 17.90 | 8.20 | 1.07 | 14.01 | 1.55 | 1.93 |
| d3, Initial Queue Delay [s] | 0.00 | 0.00 | 0.00 | 0.00 | 0.00 | 0.00 | 0.00 | 0.00 | 0.00 | 0.00 | 0.00 | 0.00 |
| Rp, platoon ratio | 1.33 | 1.33 | 1.33 | 1.33 | 1.33 | 1.33 | 1.00 | 1.00 | 1.00 | 1.00 | 1.00 | 1.00 |
| PF, progression factor | 1.00 | 1.00 | 1.00 | 1.00 | 1.00 | 1.00 | 1.00 | 1.00 | 1.00 | 1.00 | 1.00 | 1.00 |

**Lane Group Results**

| | | | | | | | | | | | | |
|---|---|---|---|---|---|---|---|---|---|---|---|---|
| X, volume / capacity | 0.76 | 0.47 | 0.47 | 0.78 | 0.38 | 0.38 | 0.75 | 0.83 | 0.33 | 0.67 | 0.44 | 0.47 |
| d, Delay for Lane Group [s/veh] | 75.77 | 4.48 | 4.50 | 76.96 | 3.91 | 3.92 | 75.52 | 60.48 | 50.36 | 71.74 | 51.81 | 52.35 |
| Lane Group LOS | E | A | A | E | A | A | E | E | D | E | D | D |
| Critical Lane Group | No | No | Yes | Yes | No | No | No | Yes | No | Yes | No | No |
| 50th-Percentile Queue Length [veh] | 1.52 | 2.34 | 2.30 | 1.60 | 1.80 | 1.78 | 1.58 | 5.48 | 1.64 | 1.21 | 2.54 | 2.46 |
| 50th-Percentile Queue Length [ft] | 38.01 | 58.41 | 57.56 | 40.12 | 45.06 | 44.44 | 39.48 | 136.95 | 40.89 | 30.13 | 63.40 | 61.39 |
| 95th-Percentile Queue Length [veh] | 2.74 | 4.21 | 4.14 | 2.89 | 3.24 | 3.20 | 2.84 | 9.32 | 2.94 | 2.17 | 4.56 | 4.42 |
| 95th-Percentile Queue Length [ft] | 68.43 | 105.14 | 103.62 | 72.22 | 81.12 | 80.00 | 71.06 | 232.91 | 73.60 | 54.24 | 114.12 | 110.50 |

**Movement, Approach, & Intersection Results**

| | | | | | | | | | | | | |
|---|---|---|---|---|---|---|---|---|---|---|---|---|
| d_M, Delay for Movement [s/veh] | 75.77 | 4.49 | 4.50 | 76.96 | 3.91 | 3.92 | 75.52 | 60.48 | 50.36 | 71.74 | 51.95 | 52.35 |
| Movement LOS | E | A | A | E | A | A | E | E | D | E | D | D |
| d_A, Approach Delay [s/veh] | 7.09 | | | 7.30 | | | 60.73 | | | 55.30 | | |
| Approach LOS | A | | | A | | | E | | | E | | |
| d_I, Intersection Delay [s/veh] | 16.65 | | | | | | | | | | | |
| Intersection LOS | B | | | | | | | | | | | |
| Intersection V/C | 0.511 | | | | | | | | | | | |

## Sequence

| | | | | | | | | | | | | | | | | |
|---|---|---|---|---|---|---|---|---|---|---|---|---|---|---|---|---|
| Ring 1 | 1 | 2 | 3 | 4 | - | - | - | - | - | - | - | - | - | - | - | - |
| Ring 2 | 5 | 6 | 7 | 8 | - | - | - | - | - | - | - | - | - | - | - | - |
| Ring 3 | - | - | - | - | - | - | - | - | - | - | - | - | - | - | - | - |
| Ring 4 | - | - | - | - | - | - | - | - | - | - | - | - | - | - | - | - |

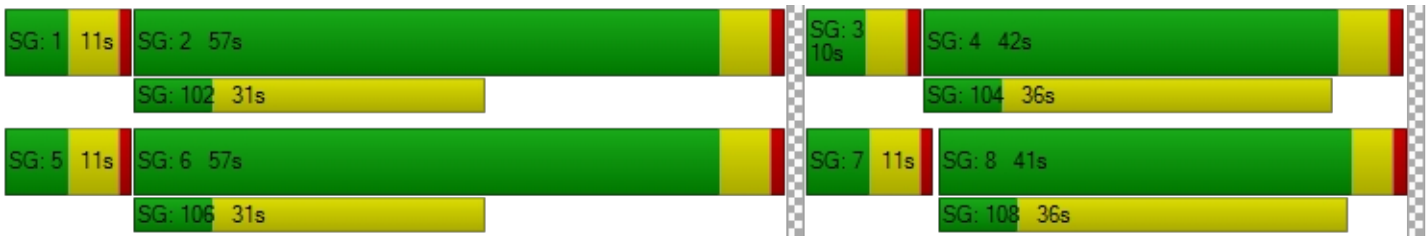

**Intersection Level Of Service Report**
**Intersection 12: Cedar Ave (NS) / Bloomington Ave (EW)**

| | | | |
|---|---|---|---|
| Control Type: | Signalized | Delay (sec / veh): | 12.7 |
| Analysis Method: | HCM 2010 | Level Of Service: | B |
| Analysis Period: | 15 minutes | Volume to Capacity (v/c): | 0.483 |

**Intersection Setup**

| Name | Cedar Avenue | | Cedar Avenue | | Bloomington Avenue | |
|---|---|---|---|---|---|---|
| Approach | Northbound | | Southbound | | Westbound | |
| Lane Configuration | | | | | | |
| Turning Movement | Thru | Right | Left | Thru | Left | Right |
| Lane Width [ft] | 12.00 | 12.00 | 12.00 | 12.00 | 12.00 | 12.00 |
| No. of Lanes in Pocket | 0 | 0 | 1 | 0 | 0 | 1 |
| Pocket Length [ft] | 100.00 | 100.00 | 100.00 | 100.00 | 100.00 | 125.00 |
| Speed [mph] | 40.00 | | 40.00 | | 45.00 | |
| Grade [%] | 0.00 | | 0.00 | | 0.00 | |
| Crosswalk | No | | Yes | | No | |

**volumes**

| Name | Cedar Avenue | | Cedar Avenue | | Bloomington Avenue | |
|---|---|---|---|---|---|---|
| Base Volume Input [veh/h] | 959 | 439 | 75 | 749 | 276 | 54 |
| Base Volume Adjustment Factor | 1.0000 | 0.0000 | 1.0000 | 1.0000 | 1.0000 | 1.0000 |
| Heavy Vehicles Percentage [%] | 4.00 | 4.00 | 4.00 | 4.00 | 4.00 | 4.00 |
| Growth Rate | 1.00 | 1.00 | 1.00 | 1.00 | 1.00 | 1.00 |
| In-Process Volume [veh/h] | 0 | 0 | 0 | 0 | 0 | 0 |
| Site-Generated Trips [veh/h] | 25 | 58 | 0 | 22 | 43 | 0 |
| Diverted Trips [veh/h] | 0 | 0 | 0 | 0 | 0 | 0 |
| Pass-by Trips [veh/h] | 0 | 0 | 0 | 0 | 0 | 0 |
| Existing Site Adjustment Volume [veh/h] | 0 | 0 | 0 | 0 | 0 | 0 |
| Other Volume [veh/h] | 0 | 0 | 0 | 0 | 0 | 0 |
| Right-Turn on Red Volume [veh/h] | 0 | 0 | 0 | 0 | 0 | 0 |
| Total Hourly Volume [veh/h] | 984 | 58 | 75 | 771 | 319 | 54 |
| Peak Hour Factor | 0.9480 | 0.9480 | 0.9480 | 0.9480 | 0.9480 | 0.9480 |
| Other Adjustment Factor | 1.0000 | 1.0000 | 1.0000 | 1.0000 | 1.0000 | 1.0000 |
| Total 15-Minute Volume [veh/h] | 259 | 15 | 20 | 203 | 84 | 14 |
| Total Analysis Volume [veh/h] | 1038 | 61 | 79 | 813 | 336 | 57 |
| Presence of On-Street Parking | No | No | No | No | No | No |
| On-Street Parking Maneuver Rate [/h] | 0 | 0 | 0 | 0 | 0 | 0 |
| Local Bus Stopping Rate [/h] | 0 | 0 | 0 | 0 | 0 | 0 |
| Pedestrian Volume [ped/h] | 0 | | 0 | | 0 | |
| Bicycle Volume [bicycles/h] | 0 | | 0 | | 0 | |

**Intersection Settings**

| | |
|---|---|
| Located in CBD | No |
| Signal Coordination Group | 2 - NS - Cedar |
| Cycle Length [s] | 120 |
| Coordination Type | Time of Day Pattern Coordinated |
| Actuation Type | Fully actuated |
| Offset [s] | 82.0 |
| Offset Reference | LagFO |
| Permissive Mode | SingleBand |
| Lost time [s] | 12.00 |

**Phasing & Timing**

| Control Type | Permissive | Permissive | Protected | Permissive | Split | Split |
|---|---|---|---|---|---|---|
| Signal group | 2 | 0 | 1 | 6 | 7 | 0 |
| Auxiliary Signal Groups | | | | | | |
| Lead / Lag | - | - | Lead | - | Lead | - |
| Minimum Green [s] | 5 | 0 | 5 | 5 | 5 | 0 |
| Maximum Green [s] | 30 | 0 | 30 | 30 | 30 | 0 |
| Amber [s] | 4.4 | 0.0 | 4.4 | 4.4 | 4.8 | 0.0 |
| All red [s] | 1.0 | 0.0 | 1.0 | 1.0 | 1.0 | 0.0 |
| Split [s] | 64 | 0 | 20 | 84 | 36 | 0 |
| Vehicle Extension [s] | 3.0 | 0.0 | 3.0 | 3.0 | 3.0 | 0.0 |
| Walk [s] | 7 | 0 | 0 | 7 | 7 | 0 |
| Pedestrian Clearance [s] | 10 | 0 | 0 | 10 | 23 | 0 |
| I1, Start-Up Lost Time [s] | 2.0 | 0.0 | 2.0 | 2.0 | 2.0 | 0.0 |
| I2, Clearance Lost Time [s] | 3.4 | 0.0 | 3.4 | 3.4 | 3.8 | 0.0 |
| Minimum Recall | No | | No | No | No | |
| Maximum Recall | No | | No | No | No | |
| Pedestrian Recall | No | | No | No | No | |
| Detector Location [ft] | 0.0 | 0.0 | 0.0 | 0.0 | 0.0 | 0.0 |
| Detector Length [ft] | 0.0 | 0.0 | 0.0 | 0.0 | 0.0 | 0.0 |
| I, Upstream Filtering Factor | 1.00 | 1.00 | 1.00 | 1.00 | 1.00 | 1.00 |

**Exclusive Pedestrian Phase**

| | |
|---|---|
| Pedestrian Signal Group | 0 |
| Pedestrian Walk [s] | 0 |
| Pedestrian Clearance [s] | 0 |

**Lane Group Calculations**

| Lane Group | C | C | R | L | C | L | R |
|---|---|---|---|---|---|---|---|
| L, Total Lost Time per Cycle [s] | 5.40 | 5.40 | 5.40 | 5.40 | 5.40 | 5.80 | 5.80 |
| l1_p, Permitted Start-Up Lost Time [s] | 0.00 | 0.00 | 0.00 | 0.00 | 0.00 | 0.00 | 0.00 |
| l2, Clearance Lost Time [s] | 3.40 | 3.40 | 3.40 | 3.40 | 3.40 | 3.80 | 3.80 |
| g_i, Effective Green Time [s] | 82 | 82 | 82 | 7 | 94 | 15 | 15 |
| g / C, Green / Cycle | 0.68 | 0.68 | 0.68 | 0.06 | 0.78 | 0.12 | 0.12 |
| (v / s)_i Volume / Saturation Flow Rate | 0.28 | 0.29 | 0.04 | 0.05 | 0.23 | 0.10 | 0.04 |
| s, saturation flow rate [veh/h] | 1827 | 1792 | 1553 | 1740 | 3478 | 3379 | 1553 |
| c, Capacity [veh/h] | 1246 | 1222 | 1059 | 100 | 2730 | 412 | 189 |
| d1, Uniform Delay [s] | 1.96 | 1.96 | 1.75 | 54.63 | 0.00 | 51.35 | 48.00 |
| k, delay calibration | 0.50 | 0.50 | 0.50 | 0.11 | 0.50 | 0.11 | 0.11 |
| I, Upstream Filtering Factor | 1.00 | 1.00 | 1.00 | 1.00 | 1.00 | 1.00 | 1.00 |
| d2, Incremental Delay [s] | 1.03 | 1.08 | 0.10 | 12.59 | 0.28 | 3.98 | 0.88 |
| d3, Initial Queue Delay [s] | 0.00 | 0.00 | 0.00 | 0.00 | 0.00 | 0.00 | 0.00 |
| Rp, platoon ratio | 1.33 | 1.33 | 1.33 | 1.33 | 1.33 | 1.00 | 1.00 |
| PF, progression factor | 1.00 | 1.00 | 1.00 | 1.00 | 1.00 | 1.00 | 1.00 |

**Lane Group Results**

| | | | | | | | |
|---|---|---|---|---|---|---|---|
| X, volume / capacity | 0.42 | 0.42 | 0.06 | 0.79 | 0.30 | 0.82 | 0.30 |
| d, Delay for Lane Group [s/veh] | 2.98 | 3.05 | 1.86 | 67.22 | 0.28 | 55.33 | 48.89 |
| Lane Group LOS | A | A | A | E | A | E | D |
| Critical Lane Group | No | Yes | No | Yes | No | Yes | No |
| 50th-Percentile Queue Length [veh] | 1.52 | 1.53 | 0.16 | 2.63 | 0.11 | 5.02 | 1.57 |
| 50th-Percentile Queue Length [ft] | 38.02 | 38.37 | 3.95 | 65.63 | 2.65 | 125.55 | 39.18 |
| 95th-Percentile Queue Length [veh] | 2.74 | 2.76 | 0.28 | 4.73 | 0.19 | 8.70 | 2.82 |
| 95th-Percentile Queue Length [ft] | 68.43 | 69.06 | 7.10 | 118.13 | 4.77 | 217.43 | 70.52 |

**Movement, Approach, & Intersection Results**

| | | | | | | |
|---|---|---|---|---|---|---|
| d_M, Delay for Movement [s/veh] | 3.01 | 1.86 | 67.22 | 0.28 | 55.33 | 48.89 |
| Movement LOS | A | A | E | A | E | D |
| d_A, Approach Delay [s/veh] | 2.95 | | 6.21 | | 54.40 | |
| Approach LOS | A | | A | | D | |
| d_I, Intersection Delay [s/veh] | 12.65 | | | | | |
| Intersection LOS | B | | | | | |
| Intersection V/C | 0.483 | | | | | |

## Sequence

| | | | | | | | | | | | | | | | | |
|---|---|---|---|---|---|---|---|---|---|---|---|---|---|---|---|---|
| Ring 1 | 1 | 2 | - | - | - | - | - | - | - | - | - | - | - | - | - | - |
| Ring 2 | - | 6 | 7 | - | - | - | - | - | - | - | - | - | - | - | - | - |
| Ring 3 | - | - | - | - | - | - | - | - | - | - | - | - | - | - | - | - |
| Ring 4 | - | - | - | - | - | - | - | - | - | - | - | - | - | - | - | - |

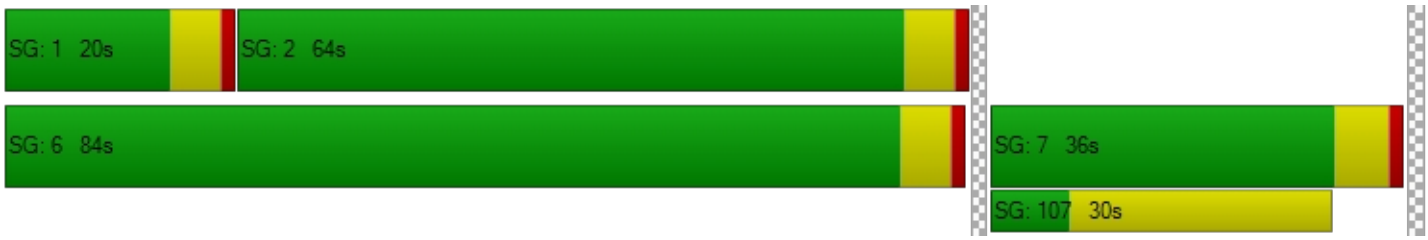

**Intersection Level Of Service Report**
**Intersection 13: Cedar Ave (NS) / Valley Blvd (EW)**

| | | | |
|---|---|---|---|
| Control Type: | Signalized | Delay (sec / veh): | 33.7 |
| Analysis Method: | HCM 2010 | Level Of Service: | C |
| Analysis Period: | 15 minutes | Volume to Capacity (v/c): | 0.809 |

**Intersection Setup**

| Name | Cedar Avenue | | | Cedar Avenue | | | | | | Valley Boulevard | | |
|---|---|---|---|---|---|---|---|---|---|---|---|---|
| Approach | Northbound | | | Southbound | | | Eastbound | | | Westbound | | |
| Lane Configuration | | | | | | | | | | | | |
| Turning Movement | Left | Thru | Right | Left | Thru | Right | Left | Thru | Right | Left | Thru | Right |
| Lane Width [ft] | 12.00 | 12.00 | 12.00 | 12.00 | 12.00 | 12.00 | 12.00 | 12.00 | 12.00 | 12.00 | 12.00 | 12.00 |
| No. of Lanes in Pocket | 2 | 0 | 1 | 2 | 0 | 0 | 2 | 0 | 1 | 2 | 0 | 0 |
| Pocket Length [ft] | 235.00 | 100.00 | 100.00 | 155.00 | 100.00 | 100.00 | 300.00 | 100.00 | 300.00 | 375.00 | 100.00 | 100.00 |
| Speed [mph] | 40.00 | | | 40.00 | | | 30.00 | | | 40.00 | | |
| Grade [%] | 0.00 | | | 0.00 | | | 0.00 | | | 0.00 | | |
| Crosswalk | Yes | | | Yes | | | Yes | | | Yes | | |

**volumes**

| Name | Cedar Avenue | | | Cedar Avenue | | | | | | Valley Boulevard | | |
|---|---|---|---|---|---|---|---|---|---|---|---|---|
| Base Volume Input [veh/h] | 441 | 1189 | 202 | 101 | 790 | 73 | 188 | 325 | 513 | 228 | 262 | 69 |
| Base Volume Adjustment Factor | 1.0000 | 1.0000 | 1.0000 | 1.0000 | 1.0000 | 1.0000 | 1.0000 | 1.0000 | 1.0000 | 1.0000 | 1.0000 | 1.0000 |
| Heavy Vehicles Percentage [%] | 5.00 | 5.00 | 5.00 | 4.00 | 4.00 | 4.00 | 4.00 | 4.00 | 4.00 | 4.00 | 4.00 | 4.00 |
| Growth Rate | 1.00 | 1.00 | 1.00 | 1.00 | 1.00 | 1.00 | 1.00 | 1.00 | 1.00 | 1.00 | 1.00 | 1.00 |
| In-Process Volume [veh/h] | 0 | 0 | 0 | 0 | 0 | 0 | 0 | 0 | 0 | 0 | 0 | 0 |
| Site-Generated Trips [veh/h] | 267 | 0 | 3 | 3 | 0 | 62 | 81 | 33 | 412 | 0 | 28 | 2 |
| Diverted Trips [veh/h] | 0 | 0 | 0 | 0 | 0 | 0 | 0 | 0 | 0 | 0 | 0 | 0 |
| Pass-by Trips [veh/h] | 0 | 0 | 0 | 0 | 0 | 0 | 0 | 0 | 0 | 0 | 0 | 0 |
| Existing Site Adjustment Volume [veh/h] | 0 | 0 | 0 | 0 | 0 | 0 | 0 | 0 | 0 | 0 | 0 | 0 |
| Other Volume [veh/h] | 0 | 0 | 0 | 0 | 0 | 0 | 0 | 0 | 0 | 0 | 0 | 0 |
| Right-Turn on Red Volume [veh/h] | 0 | 0 | 0 | 0 | 0 | 0 | 0 | 0 | 0 | 0 | 0 | 0 |
| Total Hourly Volume [veh/h] | 708 | 1189 | 205 | 104 | 790 | 135 | 269 | 358 | 925 | 228 | 290 | 71 |
| Peak Hour Factor | 0.9760 | 0.9760 | 0.9760 | 0.9760 | 0.9760 | 0.9760 | 0.9760 | 0.9760 | 0.9760 | 0.9760 | 0.9760 | 0.9760 |
| Other Adjustment Factor | 1.0000 | 1.0000 | 1.0000 | 1.0000 | 1.0000 | 1.0000 | 1.0000 | 1.0000 | 1.0000 | 1.0000 | 1.0000 | 1.0000 |
| Total 15-Minute Volume [veh/h] | 181 | 305 | 53 | 27 | 202 | 35 | 69 | 92 | 237 | 58 | 74 | 18 |
| Total Analysis Volume [veh/h] | 725 | 1218 | 210 | 107 | 809 | 138 | 276 | 367 | 948 | 234 | 297 | 73 |
| Presence of On-Street Parking | No | | No | No | | No | No | | No | No | | No |
| On-Street Parking Maneuver Rate [/h] | 0 | 0 | 0 | 0 | 0 | 0 | 0 | 0 | 0 | 0 | 0 | 0 |
| Local Bus Stopping Rate [/h] | 0 | 0 | 0 | 0 | 0 | 0 | 0 | 0 | 0 | 0 | 0 | 0 |
| Pedestrian Volume [ped/h] | 0 | | | 0 | | | 0 | | | 0 | | |
| Bicycle Volume [bicycles/h] | 0 | | | 0 | | | 0 | | | 0 | | |

**Intersection Settings**

| | |
|---|---|
| Located in CBD | No |
| Signal Coordination Group | 2 - NS - Cedar |
| Cycle Length [s] | 120 |
| Coordination Type | Time of Day Pattern Coordinated |
| Actuation Type | Fully actuated |
| Offset [s] | 73.0 |
| Offset Reference | LagFO |
| Permissive Mode | SingleBand |
| Lost time [s] | 16.00 |

**Phasing & Timing**

| Control Type | Protecte | Permiss | Overlap | Protecte | Permiss | Permiss | Protecte | Permiss | Overlap | Protecte | Permiss | Permiss |
|---|---|---|---|---|---|---|---|---|---|---|---|---|
| Signal group | 5 | 2 | 2 | 1 | 6 | 0 | 3 | 8 | 8 | 7 | 4 | 0 |
| Auxiliary Signal Groups | | | 2,7 | | | | | | 5,8 | | | |
| Lead / Lag | Lead | - | - | Lead | - | - | Lead | - | - | Lead | - | - |
| Minimum Green [s] | 5 | 5 | 5 | 5 | 5 | 0 | 5 | 5 | 5 | 5 | 5 | 0 |
| Maximum Green [s] | 30 | 30 | 30 | 30 | 30 | 0 | 30 | 30 | 30 | 30 | 30 | 0 |
| Amber [s] | 4.4 | 4.4 | 4.4 | 4.4 | 4.4 | 0.0 | 3.7 | 3.7 | 3.7 | 4.4 | 4.4 | 0.0 |
| All red [s] | 1.0 | 1.0 | 1.0 | 1.0 | 1.0 | 0.0 | 1.0 | 1.0 | 1.0 | 1.0 | 1.0 | 0.0 |
| Split [s] | 33 | 62 | 62 | 11 | 40 | 0 | 26 | 32 | 32 | 15 | 21 | 0 |
| Vehicle Extension [s] | 3.0 | 3.0 | 3.0 | 3.0 | 3.0 | 0.0 | 3.0 | 3.0 | 3.0 | 3.0 | 3.0 | 0.0 |
| Walk [s] | 0 | 7 | 7 | 0 | 7 | 0 | 0 | 5 | 5 | 0 | 5 | 0 |
| Pedestrian Clearance [s] | 0 | 28 | 28 | 0 | 27 | 0 | 0 | 10 | 10 | 0 | 10 | 0 |
| I1, Start-Up Lost Time [s] | 2.0 | 2.0 | 2.0 | 2.0 | 2.0 | 0.0 | 2.0 | 2.0 | 2.0 | 2.0 | 2.0 | 0.0 |
| I2, Clearance Lost Time [s] | 3.4 | 3.4 | 3.4 | 3.4 | 3.4 | 0.0 | 2.7 | 2.7 | 2.7 | 3.4 | 3.4 | 0.0 |
| Minimum Recall | No | No | No | No | No | | No | No | No | No | No | |
| Maximum Recall | No | No | No | No | No | | No | No | No | No | No | |
| Pedestrian Recall | No | No | No | No | No | | No | No | No | No | No | |
| Detector Location [ft] | 0.0 | 0.0 | 0.0 | 0.0 | 0.0 | 0.0 | 0.0 | 0.0 | 0.0 | 0.0 | 0.0 | 0.0 |
| Detector Length [ft] | 0.0 | 0.0 | 0.0 | 0.0 | 0.0 | 0.0 | 0.0 | 0.0 | 0.0 | 0.0 | 0.0 | 0.0 |
| I, Upstream Filtering Factor | 1.00 | 1.00 | 1.00 | 1.00 | 1.00 | 1.00 | 1.00 | 1.00 | 1.00 | 1.00 | 1.00 | 1.00 |

**Exclusive Pedestrian Phase**

| | |
|---|---|
| Pedestrian Signal Group | 0 |
| Pedestrian Walk [s] | 0 |
| Pedestrian Clearance [s] | 0 |

**Lane Group Calculations**

| Lane Group | L | C | R | L | C | C | L | C | R | L | C | C |
|---|---|---|---|---|---|---|---|---|---|---|---|---|
| L, Total Lost Time per Cycle [s] | 5.40 | 5.40 | 5.40 | 5.40 | 5.40 | 5.40 | 4.70 | 4.70 | 5.40 | 5.40 | 5.40 | 5.40 |
| l1_p, Permitted Start-Up Lost Time [s] | 0.00 | 0.00 | 0.00 | 0.00 | 0.00 | 0.00 | 0.00 | 0.00 | 0.00 | 0.00 | 0.00 | 0.00 |
| l2, Clearance Lost Time [s] | 3.40 | 3.40 | 0.00 | 3.40 | 3.40 | 3.40 | 2.70 | 2.70 | 0.00 | 3.40 | 3.40 | 3.40 |
| g_i, Effective Green Time [s] | 28 | 58 | 73 | 6 | 36 | 36 | 12 | 26 | 59 | 10 | 24 | 24 |
| g / C, Green / Cycle | 0.23 | 0.48 | 0.61 | 0.05 | 0.30 | 0.30 | 0.10 | 0.22 | 0.49 | 0.08 | 0.20 | 0.20 |
| (v / s)_i Volume / Saturation Flow Rate | 0.22 | 0.35 | 0.14 | 0.03 | 0.18 | 0.18 | 0.08 | 0.20 | 0.34 | 0.07 | 0.10 | 0.11 |
| s, saturation flow rate [veh/h] | 3347 | 3445 | 1538 | 3379 | 3478 | 1694 | 3379 | 1827 | 2749 | 3379 | 1827 | 1705 |
| c, Capacity [veh/h] | 770 | 1656 | 932 | 158 | 1034 | 504 | 341 | 399 | 1340 | 271 | 361 | 337 |
| d1, Uniform Delay [s] | 40.84 | 16.39 | 4.92 | 55.40 | 30.75 | 30.79 | 50.83 | 41.53 | 15.46 | 52.94 | 39.38 | 39.43 |
| k, delay calibration | 0.11 | 0.50 | 0.50 | 0.11 | 0.50 | 0.50 | 0.11 | 0.35 | 0.24 | 0.11 | 0.11 | 0.11 |
| I, Upstream Filtering Factor | 1.00 | 1.00 | 1.00 | 1.00 | 1.00 | 1.00 | 1.00 | 1.00 | 1.00 | 1.00 | 1.00 | 1.00 |
| d2, Incremental Delay [s] | 6.56 | 2.95 | 0.56 | 5.02 | 2.74 | 5.61 | 4.62 | 22.27 | 1.54 | 7.96 | 1.19 | 1.30 |
| d3, Initial Queue Delay [s] | 0.00 | 0.00 | 0.00 | 0.00 | 0.00 | 0.00 | 0.00 | 0.00 | 0.00 | 0.00 | 0.00 | 0.00 |
| Rp, platoon ratio | 1.33 | 1.33 | 1.33 | 1.33 | 1.33 | 1.33 | 1.33 | 1.33 | 1.33 | 1.33 | 1.33 | 1.33 |
| PF, progression factor | 1.00 | 1.00 | 1.00 | 1.00 | 1.00 | 1.00 | 1.00 | 1.00 | 1.00 | 1.00 | 1.00 | 1.00 |

**Lane Group Results**

| | | | | | | | | | | | | |
|---|---|---|---|---|---|---|---|---|---|---|---|---|
| X, volume / capacity | 0.94 | 0.74 | 0.23 | 0.68 | 0.61 | 0.62 | 0.81 | 0.92 | 0.71 | 0.86 | 0.53 | 0.53 |
| d, Delay for Lane Group [s/veh] | 47.40 | 19.34 | 5.48 | 60.42 | 33.48 | 36.39 | 55.45 | 63.79 | 17.00 | 60.90 | 40.58 | 40.73 |
| Lane Group LOS | D | B | A | E | C | D | E | E | B | E | D | D |
| Critical Lane Group | Yes | No | No | No | No | Yes | No | No | Yes | Yes | No | No |
| 50th-Percentile Queue Length [veh] | 10.22 | 9.38 | 1.23 | 1.66 | 6.99 | 7.26 | 4.13 | 12.37 | 7.12 | 3.63 | 4.64 | 4.38 |
| 50th-Percentile Queue Length [ft] | 255.39 | 234.38 | 30.66 | 41.39 | 174.79 | 181.52 | 103.14 | 309.23 | 178.04 | 90.71 | 115.97 | 109.60 |
| 95th-Percentile Queue Length [veh] | 15.46 | 14.40 | 2.21 | 2.98 | 11.33 | 11.68 | 7.43 | 18.14 | 11.50 | 6.53 | 8.17 | 7.82 |
| 95th-Percentile Queue Length [ft] | 386.44 | 359.92 | 55.18 | 74.50 | 283.20 | 292.00 | 185.65 | 453.43 | 287.46 | 163.28 | 204.27 | 195.44 |

**Movement, Approach, & Intersection Results**

| | | | | | | | | | | | | |
|---|---|---|---|---|---|---|---|---|---|---|---|---|
| d_M, Delay for Movement [s/veh] | 47.40 | 19.34 | 5.48 | 60.42 | 34.11 | 36.39 | 55.45 | 63.79 | 17.00 | 60.90 | 40.63 | 40.73 |
| Movement LOS | D | B | A | E | C | D | E | E | B | E | D | D |
| d_A, Approach Delay [s/veh] | 27.44 | | | 37.08 | | | 34.46 | | | 48.50 | | |
| Approach LOS | C | | | D | | | C | | | D | | |
| d_I, Intersection Delay [s/veh] | 33.74 | | | | | | | | | | | |
| Intersection LOS | C | | | | | | | | | | | |
| Intersection V/C | 0.809 | | | | | | | | | | | |

## Sequence

| | | | | | | | | | | | | | | | | |
|---|---|---|---|---|---|---|---|---|---|---|---|---|---|---|---|---|
| Ring 1 | 1 | 2 | 3 | 4 | - | - | - | - | - | - | - | - | - | - | - | - |
| Ring 2 | 5 | 6 | 7 | 8 | - | - | - | - | - | - | - | - | - | - | - | - |
| Ring 3 | - | - | - | - | - | - | - | - | - | - | - | - | - | - | - | - |
| Ring 4 | - | - | - | - | - | - | - | - | - | - | - | - | - | - | - | - |

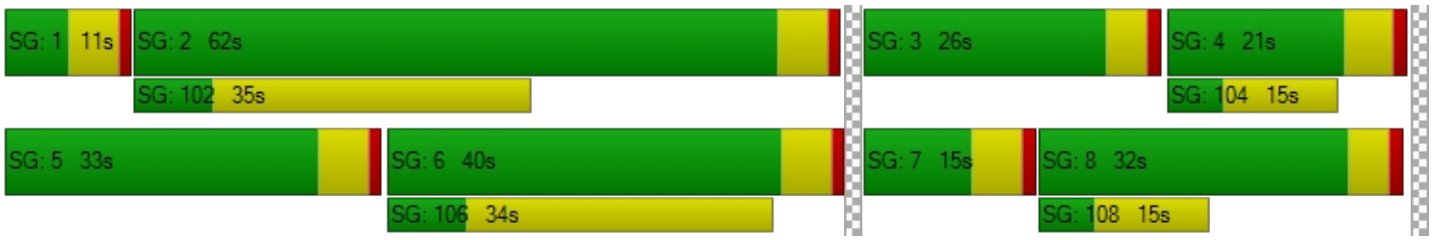

**Intersection Level Of Service Report**
**Intersection 14: Cedar Ave (NS) / I-10 Westbound Ramps (EW)**

| | | | |
|---|---|---|---|
| Control Type: | Signalized | Delay (sec / veh): | 43.2 |
| Analysis Method: | HCM 2010 | Level Of Service: | D |
| Analysis Period: | 15 minutes | Volume to Capacity (v/c): | 0.962 |

**Intersection Setup**

| Name | Cedar Avenue | | | Cedar Avenue | | | | | | I-10 Westbound Ramps | | |
|---|---|---|---|---|---|---|---|---|---|---|---|---|
| Approach | Northbound | | | Southbound | | | Eastbound | | | Westbound | | |
| Lane Configuration | | | | | | | | | | | | |
| Turning Movement | Left | Thru | Right | Left | Thru | Right | Left | Thru | Right | Left | Thru | Right |
| Lane Width [ft] | 12.00 | 12.00 | 12.00 | 12.00 | 12.00 | 12.00 | 12.00 | 12.00 | 12.00 | 12.00 | 12.00 | 12.00 |
| No. of Lanes in Pocket | 1 | 0 | 0 | 0 | 0 | 1 | 0 | 0 | 0 | 0 | 0 | 1 |
| Pocket Length [ft] | 305.00 | 100.00 | 100.00 | 100.00 | 100.00 | 100.00 | 100.00 | 100.00 | 100.00 | 100.00 | 100.00 | 485.00 |
| Speed [mph] | 40.00 | | | 40.00 | | | 30.00 | | | 30.00 | | |
| Grade [%] | 0.00 | | | 0.00 | | | 0.00 | | | 0.00 | | |
| Crosswalk | No | | | No | | | Yes | | | Yes | | |

**volumes**

| Name | Cedar Avenue | | | Cedar Avenue | | | | | | I-10 Westbound Ramps | | |
|---|---|---|---|---|---|---|---|---|---|---|---|---|
| Base Volume Input [veh/h] | 214 | 1312 | 0 | 0 | 1075 | 419 | 0 | 0 | 0 | 310 | 3 | 476 |
| Base Volume Adjustment Factor | 1.0000 | 1.0000 | 1.0000 | 1.0000 | 1.0000 | 1.0000 | 1.0000 | 1.0000 | 1.0000 | 1.0000 | 1.0000 | 1.0000 |
| Heavy Vehicles Percentage [%] | 5.00 | 5.00 | 2.00 | 2.00 | 5.00 | 5.00 | 2.00 | 2.00 | 2.00 | 6.00 | 6.00 | 6.00 |
| Growth Rate | 1.00 | 1.00 | 1.00 | 1.00 | 1.00 | 1.00 | 1.00 | 1.00 | 1.00 | 1.00 | 1.00 | 1.00 |
| In-Process Volume [veh/h] | 0 | 0 | 0 | 0 | 0 | 0 | 0 | 0 | 0 | 0 | 0 | 0 |
| Site-Generated Trips [veh/h] | 0 | 160 | 0 | 0 | 222 | 190 | 13 | 0 | 0 | 0 | 0 | 97 |
| Diverted Trips [veh/h] | 0 | 0 | 0 | 0 | 0 | 0 | 0 | 0 | 0 | 0 | 0 | 0 |
| Pass-by Trips [veh/h] | 0 | 0 | 0 | 0 | 0 | 0 | 0 | 0 | 0 | 0 | 0 | 0 |
| Existing Site Adjustment Volume [veh/h] | 0 | 0 | 0 | 0 | 0 | 0 | 0 | 0 | 0 | 0 | 0 | 0 |
| Other Volume [veh/h] | 0 | 0 | 0 | 0 | 0 | 0 | 0 | 0 | 0 | 0 | 0 | 0 |
| Right-Turn on Red Volume [veh/h] | 0 | 0 | 0 | 0 | 0 | 0 | 0 | 0 | 0 | 0 | 0 | 0 |
| Total Hourly Volume [veh/h] | 214 | 1472 | 0 | 0 | 1297 | 609 | 13 | 0 | 0 | 310 | 3 | 573 |
| Peak Hour Factor | 0.9350 | 0.9350 | 1.0000 | 1.0000 | 0.9350 | 0.9350 | 1.0000 | 1.0000 | 1.0000 | 0.9350 | 0.9350 | 0.9350 |
| Other Adjustment Factor | 1.0000 | 1.0000 | 1.0000 | 1.0000 | 1.0000 | 1.0000 | 1.0000 | 1.0000 | 1.0000 | 1.0000 | 1.0000 | 1.0000 |
| Total 15-Minute Volume [veh/h] | 57 | 394 | 0 | 0 | 347 | 163 | 3 | 0 | 0 | 83 | 1 | 153 |
| Total Analysis Volume [veh/h] | 229 | 1574 | 0 | 0 | 1387 | 651 | 13 | 0 | 0 | 332 | 3 | 613 |
| Presence of On-Street Parking | No | | No | No | | No | | | | No | | No |
| On-Street Parking Maneuver Rate [/h] | 0 | 0 | 0 | 0 | 0 | 0 | 0 | 0 | 0 | 0 | 0 | 0 |
| Local Bus Stopping Rate [/h] | 0 | 0 | 0 | 0 | 0 | 0 | 0 | 0 | 0 | 0 | 0 | 0 |
| Pedestrian Volume [ped/h] | 0 | | | 0 | | | 0 | | | 0 | | |
| Bicycle Volume [bicycles/h] | 0 | | | 0 | | | 0 | | | 0 | | |

**Intersection Settings**

| | |
|---|---|
| Located in CBD | No |
| Signal Coordination Group | 2 - NS - Cedar |
| Cycle Length [s] | 120 |
| Coordination Type | Time of Day Pattern Coordinated |
| Actuation Type | Fully actuated |
| Offset [s] | 82.0 |
| Offset Reference | LagFO |
| Permissive Mode | SingleBand |
| Lost time [s] | 12.00 |

**Phasing & Timing**

| Control Type | Protecte | Permiss | Permiss | Permiss | Permiss | Permiss | Permiss | Permiss | Permiss | Permiss | Permiss | Permiss |
|---|---|---|---|---|---|---|---|---|---|---|---|---|
| Signal group | 5 | 2 | 0 | 0 | 6 | 0 | 0 | 0 | 0 | 0 | 4 | 0 |
| Auxiliary Signal Groups | | | | | | | | | | | | |
| Lead / Lag | Lead | - | - | - | - | - | - | - | - | - | - | - |
| Minimum Green [s] | 5 | 5 | 0 | 0 | 5 | 0 | 0 | 0 | 0 | 0 | 5 | 0 |
| Maximum Green [s] | 30 | 30 | 0 | 0 | 30 | 0 | 0 | 0 | 0 | 0 | 30 | 0 |
| Amber [s] | 4.4 | 4.4 | 0.0 | 0.0 | 4.4 | 0.0 | 0.0 | 0.0 | 0.0 | 0.0 | 3.7 | 0.0 |
| All red [s] | 1.0 | 1.0 | 0.0 | 0.0 | 1.0 | 0.0 | 0.0 | 0.0 | 0.0 | 0.0 | 1.0 | 0.0 |
| Split [s] | 22 | 79 | 0 | 0 | 57 | 0 | 0 | 0 | 0 | 0 | 41 | 0 |
| Vehicle Extension [s] | 3.0 | 3.0 | 0.0 | 0.0 | 3.0 | 0.0 | 0.0 | 0.0 | 0.0 | 0.0 | 3.0 | 0.0 |
| Walk [s] | 0 | 7 | 0 | 0 | 7 | 0 | 0 | 0 | 0 | 0 | 7 | 0 |
| Pedestrian Clearance [s] | 0 | 17 | 0 | 0 | 17 | 0 | 0 | 0 | 0 | 0 | 10 | 0 |
| I1, Start-Up Lost Time [s] | 2.0 | 2.0 | 0.0 | 0.0 | 2.0 | 0.0 | 0.0 | 0.0 | 0.0 | 0.0 | 2.0 | 0.0 |
| I2, Clearance Lost Time [s] | 3.4 | 3.4 | 0.0 | 0.0 | 3.4 | 0.0 | 0.0 | 0.0 | 0.0 | 0.0 | 2.7 | 0.0 |
| Minimum Recall | No | No | | | No | | | | | | No | |
| Maximum Recall | No | No | | | No | | | | | | No | |
| Pedestrian Recall | No | No | | | No | | | | | | No | |
| Detector Location [ft] | 0.0 | 0.0 | 0.0 | 0.0 | 0.0 | 0.0 | 0.0 | 0.0 | 0.0 | 0.0 | 0.0 | 0.0 |
| Detector Length [ft] | 0.0 | 0.0 | 0.0 | 0.0 | 0.0 | 0.0 | 0.0 | 0.0 | 0.0 | 0.0 | 0.0 | 0.0 |
| I, Upstream Filtering Factor | 1.00 | 1.00 | 1.00 | 1.00 | 1.00 | 1.00 | 1.00 | 1.00 | 1.00 | 1.00 | 1.00 | 1.00 |

**Exclusive Pedestrian Phase**

| | |
|---|---|
| Pedestrian Signal Group | 0 |
| Pedestrian Walk [s] | 0 |
| Pedestrian Clearance [s] | 0 |

**Lane Group Calculations**

| Lane Group | L | C | C | R | | C | R |
|---|---|---|---|---|---|---|---|
| L, Total Lost Time per Cycle [s] | 5.40 | 5.40 | 5.40 | 5.40 | | 4.70 | 4.70 |
| l1_p, Permitted Start-Up Lost Time [s] | 0.00 | 0.00 | 0.00 | 0.00 | | 0.00 | 0.00 |
| l2, Clearance Lost Time [s] | 3.40 | 3.40 | 3.40 | 3.40 | | 2.70 | 2.70 |
| g_i, Effective Green Time [s] | 17 | 74 | 52 | 52 | | 36 | 36 |
| g / C, Green / Cycle | 0.14 | 0.61 | 0.43 | 0.43 | | 0.30 | 0.30 |
| (v / s)_i Volume / Saturation Flow Rate | 0.13 | 0.46 | 0.28 | 0.42 | | 0.29 | 0.31 |
| s, saturation flow rate [veh/h] | 1723 | 3445 | 4929 | 1538 | | 1649 | 1524 |
| c, Capacity [veh/h] | 239 | 2113 | 2118 | 661 | | 499 | 461 |
| d1, Uniform Delay [s] | 51.30 | 16.50 | 27.15 | 33.83 | | 41.03 | 41.84 |
| k, delay calibration | 0.34 | 0.50 | 0.50 | 0.50 | | 0.41 | 0.46 |
| I, Upstream Filtering Factor | 1.00 | 1.00 | 1.00 | 1.00 | | 1.00 | 1.00 |
| d2, Incremental Delay [s] | 38.41 | 2.43 | 1.60 | 31.59 | | 27.03 | 46.66 |
| d3, Initial Queue Delay [s] | 0.00 | 0.00 | 0.00 | 0.00 | | 0.00 | 0.00 |
| Rp, platoon ratio | 1.00 | 1.00 | 1.00 | 1.00 | | 1.00 | 1.00 |
| PF, progression factor | 1.00 | 1.00 | 1.00 | 1.00 | | 1.00 | 1.00 |

**Lane Group Results**

| | | | | | | | |
|---|---|---|---|---|---|---|---|
| X, volume / capacity | 0.96 | 0.74 | 0.65 | 0.99 | | 0.95 | 1.02 |
| d, Delay for Lane Group [s/veh] | 89.71 | 18.94 | 28.75 | 65.42 | | 68.07 | 88.49 |
| Lane Group LOS | F | B | C | E | | E | F |
| Critical Lane Group | Yes | No | No | Yes | | No | Yes |
| 50th-Percentile Queue Length [veh] | 9.25 | 14.55 | 10.39 | 23.48 | | 17.37 | 19.42 |
| 50th-Percentile Queue Length [ft] | 231.30 | 363.69 | 259.78 | 586.96 | | 434.34 | 485.47 |
| 95th-Percentile Queue Length [veh] | 14.24 | 20.80 | 15.68 | 31.43 | | 24.21 | 27.07 |
| 95th-Percentile Queue Length [ft] | 356.01 | 520.07 | 391.95 | 785.63 | | 605.24 | 676.63 |

**Movement, Approach, & Intersection Results**

| | | | | | | | | | | | | |
|---|---|---|---|---|---|---|---|---|---|---|---|---|
| d_M, Delay for Movement [s/veh] | 89.71 | 18.94 | 0.00 | 0.00 | 28.75 | 65.42 | 0.00 | 0.00 | 0.00 | 68.07 | 68.07 | 83.83 |
| Movement LOS | F | B | | | C | E | | | | E | E | F |
| d_A, Approach Delay [s/veh] | 27.93 | | | 40.46 | | | 0.00 | | | 78.24 | | |
| Approach LOS | C | | | D | | | A | | | E | | |
| d_I, Intersection Delay [s/veh] | 43.22 | | | | | | | | | | | |
| Intersection LOS | D | | | | | | | | | | | |
| Intersection V/C | 0.962 | | | | | | | | | | | |

## Sequence

| | | | | | | | | | | | | | | | | |
|---|---|---|---|---|---|---|---|---|---|---|---|---|---|---|---|---|
| Ring 1 | - | 2 | 4 | - | - | - | - | - | - | - | - | - | - | - | - | - |
| Ring 2 | 5 | 6 | - | - | - | - | - | - | - | - | - | - | - | - | - | - |
| Ring 3 | - | - | - | - | - | - | - | - | - | - | - | - | - | - | - | - |
| Ring 4 | - | - | - | - | - | - | - | - | - | - | - | - | - | - | - | - |

**Intersection Level Of Service Report**
**Intersection 15: Cedar Ave (NS) / I-10 Eastbound Ramps (EW)**

| | | | |
|---|---|---|---|
| Control Type: | Signalized | Delay (sec / veh): | 54.8 |
| Analysis Method: | HCM 2010 | Level Of Service: | D |
| Analysis Period: | 15 minutes | Volume to Capacity (v/c): | 0.954 |

**Intersection Setup**

| Name | Cedar Avenue | | | Cedar Avenue | | | | | | I-10 Eastbound Ramps | | |
|---|---|---|---|---|---|---|---|---|---|---|---|---|
| Approach | Northbound | | | Southbound | | | Eastbound | | | Westbound | | |
| Lane Configuration | | | | | | | | | | | | |
| Turning Movement | Left | Thru | Right | Left | Thru | Right | Left | Thru | Right | Left | Thru | Right |
| Lane Width [ft] | 12.00 | 12.00 | 12.00 | 12.00 | 12.00 | 12.00 | 12.00 | 12.00 | 12.00 | 12.00 | 12.00 | 12.00 |
| No. of Lanes in Pocket | 0 | 0 | 1 | 1 | 0 | 0 | 1 | 0 | 0 | 0 | 0 | 0 |
| Pocket Length [ft] | 100.00 | 100.00 | 555.00 | 305.00 | 100.00 | 100.00 | 340.00 | 100.00 | 100.00 | 100.00 | 100.00 | 100.00 |
| Speed [mph] | 40.00 | | | 40.00 | | | 30.00 | | | 30.00 | | |
| Grade [%] | 0.00 | | | 0.00 | | | 0.00 | | | 0.00 | | |
| Crosswalk | No | | | No | | | Yes | | | Yes | | |

**volumes**

| Name | Cedar Avenue | | | Cedar Avenue | | | | | | I-10 Eastbound Ramps | | |
|---|---|---|---|---|---|---|---|---|---|---|---|---|
| Base Volume Input [veh/h] | 0 | 843 | 288 | 374 | 1034 | 0 | 688 | 2 | 183 | 0 | 0 | 0 |
| Base Volume Adjustment Factor | 1.0000 | 1.0000 | 1.0000 | 1.0000 | 1.0000 | 1.0000 | 1.0000 | 1.0000 | 1.0000 | 1.0000 | 1.0000 | 1.0000 |
| Heavy Vehicles Percentage [%] | 2.00 | 5.00 | 5.00 | 5.00 | 5.00 | 2.00 | 6.00 | 6.00 | 6.00 | 2.00 | 2.00 | 2.00 |
| Growth Rate | 1.00 | 1.00 | 1.00 | 1.00 | 1.00 | 1.00 | 1.00 | 1.00 | 1.00 | 1.00 | 1.00 | 1.00 |
| In-Process Volume [veh/h] | 0 | 0 | 0 | 0 | 0 | 0 | 0 | 0 | 0 | 0 | 0 | 0 |
| Site-Generated Trips [veh/h] | 0 | 62 | 0 | 157 | 65 | 0 | 98 | 0 | 0 | 0 | 0 | 0 |
| Diverted Trips [veh/h] | 0 | 0 | 0 | 0 | 0 | 0 | 0 | 0 | 0 | 0 | 0 | 0 |
| Pass-by Trips [veh/h] | 0 | 0 | 0 | 0 | 0 | 0 | 0 | 0 | 0 | 0 | 0 | 0 |
| Existing Site Adjustment Volume [veh/h] | 0 | 0 | 0 | 0 | 0 | 0 | 0 | 0 | 0 | 0 | 0 | 0 |
| Other Volume [veh/h] | 0 | 0 | 0 | 0 | 0 | 0 | 0 | 0 | 0 | 0 | 0 | 0 |
| Right-Turn on Red Volume [veh/h] | 0 | 0 | 0 | 0 | 0 | 0 | 0 | 0 | 0 | 0 | 0 | 0 |
| Total Hourly Volume [veh/h] | 0 | 905 | 288 | 531 | 1099 | 0 | 786 | 2 | 183 | 0 | 0 | 0 |
| Peak Hour Factor | 1.0000 | 0.9240 | 0.9240 | 0.9240 | 0.9240 | 1.0000 | 0.9240 | 0.9240 | 0.9240 | 1.0000 | 1.0000 | 1.0000 |
| Other Adjustment Factor | 1.0000 | 1.0000 | 1.0000 | 1.0000 | 1.0000 | 1.0000 | 1.0000 | 1.0000 | 1.0000 | 1.0000 | 1.0000 | 1.0000 |
| Total 15-Minute Volume [veh/h] | 0 | 245 | 78 | 144 | 297 | 0 | 213 | 1 | 50 | 0 | 0 | 0 |
| Total Analysis Volume [veh/h] | 0 | 979 | 312 | 575 | 1189 | 0 | 851 | 2 | 198 | 0 | 0 | 0 |
| Presence of On-Street Parking | No | | No | No | | No | No | | No | | | |
| On-Street Parking Maneuver Rate [/h] | 0 | 0 | 0 | 0 | 0 | 0 | 0 | 0 | 0 | 0 | 0 | 0 |
| Local Bus Stopping Rate [/h] | 0 | 0 | 0 | 0 | 0 | 0 | 0 | 0 | 0 | 0 | 0 | 0 |
| Pedestrian Volume [ped/h] | 0 | | | 0 | | | 0 | | | 0 | | |
| Bicycle Volume [bicycles/h] | 0 | | | 0 | | | 0 | | | 0 | | |

**Intersection Settings**

| | |
|---|---|
| Located in CBD | No |
| Signal Coordination Group | 2 - NS - Cedar |
| Cycle Length [s] | 120 |
| Coordination Type | Time of Day Pattern Coordinated |
| Actuation Type | Fully actuated |
| Offset [s] | 78.0 |
| Offset Reference | LagFO |
| Permissive Mode | SingleBand |
| Lost time [s] | 12.00 |

**Phasing & Timing**

| Control Type | Permiss | Permiss | Permiss | Protecte | Permiss | Permiss | Permiss | Permiss | Permiss | Permiss | Permiss | Permiss |
|---|---|---|---|---|---|---|---|---|---|---|---|---|
| Signal group | 0 | 2 | 0 | 1 | 6 | 0 | 0 | 8 | 0 | 0 | 0 | 0 |
| Auxiliary Signal Groups | | | | | | | | | | | | |
| Lead / Lag | - | - | - | Lead | - | - | - | - | - | - | - | - |
| Minimum Green [s] | 0 | 5 | 0 | 5 | 5 | 0 | 0 | 5 | 0 | 0 | 0 | 0 |
| Maximum Green [s] | 0 | 30 | 0 | 30 | 30 | 0 | 0 | 30 | 0 | 0 | 0 | 0 |
| Amber [s] | 0.0 | 4.4 | 0.0 | 4.4 | 4.4 | 0.0 | 0.0 | 3.7 | 0.0 | 0.0 | 0.0 | 0.0 |
| All red [s] | 0.0 | 1.0 | 0.0 | 1.0 | 1.0 | 0.0 | 0.0 | 1.0 | 0.0 | 0.0 | 0.0 | 0.0 |
| Split [s] | 0 | 34 | 0 | 44 | 78 | 0 | 0 | 42 | 0 | 0 | 0 | 0 |
| Vehicle Extension [s] | 0.0 | 3.0 | 0.0 | 3.0 | 3.0 | 0.0 | 0.0 | 3.0 | 0.0 | 0.0 | 0.0 | 0.0 |
| Walk [s] | 0 | 7 | 0 | 0 | 7 | 0 | 0 | 7 | 0 | 0 | 0 | 0 |
| Pedestrian Clearance [s] | 0 | 21 | 0 | 0 | 16 | 0 | 0 | 10 | 0 | 0 | 0 | 0 |
| I1, Start-Up Lost Time [s] | 0.0 | 2.0 | 0.0 | 2.0 | 2.0 | 0.0 | 0.0 | 2.0 | 0.0 | 0.0 | 0.0 | 0.0 |
| I2, Clearance Lost Time [s] | 0.0 | 3.4 | 0.0 | 3.4 | 3.4 | 0.0 | 0.0 | 2.7 | 0.0 | 0.0 | 0.0 | 0.0 |
| Minimum Recall | | No | | No | No | | | No | | | | |
| Maximum Recall | | No | | No | No | | | No | | | | |
| Pedestrian Recall | | No | | No | No | | | No | | | | |
| Detector Location [ft] | 0.0 | 0.0 | 0.0 | 0.0 | 0.0 | 0.0 | 0.0 | 0.0 | 0.0 | 0.0 | 0.0 | 0.0 |
| Detector Length [ft] | 0.0 | 0.0 | 0.0 | 0.0 | 0.0 | 0.0 | 0.0 | 0.0 | 0.0 | 0.0 | 0.0 | 0.0 |
| I, Upstream Filtering Factor | 1.00 | 1.00 | 1.00 | 1.00 | 1.00 | 1.00 | 1.00 | 1.00 | 1.00 | 1.00 | 1.00 | 1.00 |

**Exclusive Pedestrian Phase**

| | |
|---|---|
| Pedestrian Signal Group | 0 |
| Pedestrian Walk [s] | 0 |
| Pedestrian Clearance [s] | 0 |

**Lane Group Calculations**

| Lane Group | C | R | L | C | L | C | |
|---|---|---|---|---|---|---|---|
| L, Total Lost Time per Cycle [s] | 5.40 | 5.40 | 5.40 | 5.40 | 4.70 | 4.70 | |
| l1_p, Permitted Start-Up Lost Time [s] | 0.00 | 0.00 | 0.00 | 0.00 | 0.00 | 0.00 | |
| l2, Clearance Lost Time [s] | 3.40 | 3.40 | 3.40 | 3.40 | 2.70 | 2.70 | |
| g_i, Effective Green Time [s] | 29 | 29 | 39 | 73 | 37 | 37 | |
| g / C, Green / Cycle | 0.24 | 0.24 | 0.32 | 0.61 | 0.31 | 0.31 | |
| (v / s)_i Volume / Saturation Flow Rate | 0.20 | 0.20 | 0.33 | 0.35 | 0.31 | 0.32 | |
| s, saturation flow rate [veh/h] | 4929 | 1538 | 1723 | 3445 | 1707 | 1633 | |
| c, Capacity [veh/h] | 1177 | 367 | 554 | 2085 | 530 | 507 | |
| d1, Uniform Delay [s] | 43.36 | 43.59 | 40.70 | 14.28 | 41.17 | 41.34 | |
| k, delay calibration | 0.50 | 0.50 | 0.46 | 0.50 | 0.44 | 0.47 | |
| I, Upstream Filtering Factor | 1.00 | 1.00 | 1.00 | 1.00 | 1.00 | 1.00 | |
| d2, Incremental Delay [s] | 6.92 | 21.08 | 47.13 | 1.14 | 34.49 | 48.36 | |
| d3, Initial Queue Delay [s] | 0.00 | 0.00 | 0.00 | 0.00 | 0.00 | 0.00 | |
| Rp, platoon ratio | 1.00 | 1.00 | 1.00 | 1.00 | 1.00 | 1.00 | |
| PF, progression factor | 1.00 | 1.00 | 1.00 | 1.00 | 1.00 | 1.00 | |

**Lane Group Results**

| | | | | | | | |
|---|---|---|---|---|---|---|---|
| X, volume / capacity | 0.83 | 0.85 | 1.04 | 0.57 | 0.99 | 1.04 | |
| d, Delay for Lane Group [s/veh] | 50.28 | 64.67 | 87.83 | 15.42 | 75.67 | 89.71 | |
| Lane Group LOS | D | E | F | B | E | F | |
| Critical Lane Group | No | Yes | Yes | No | No | Yes | |
| 50th-Percentile Queue Length [veh] | 9.73 | 10.78 | 22.97 | 9.25 | 20.33 | 21.60 | |
| 50th-Percentile Queue Length [ft] | 243.21 | 269.41 | 574.37 | 231.19 | 508.26 | 540.01 | |
| 95th-Percentile Queue Length [veh] | 14.84 | 16.16 | 31.63 | 14.23 | 27.73 | 29.91 | |
| 95th-Percentile Queue Length [ft] | 371.09 | 404.00 | 790.63 | 355.87 | 693.13 | 747.66 | |

**Movement, Approach, & Intersection Results**

| | | | | | | | | | | | | |
|---|---|---|---|---|---|---|---|---|---|---|---|---|
| d_M, Delay for Movement [s/veh] | 0.00 | 50.28 | 64.67 | 87.83 | 15.42 | 0.00 | 81.04 | 89.71 | 89.71 | 0.00 | 0.00 | 0.00 |
| Movement LOS | | D | E | F | B | | F | F | F | | | |
| d_A, Approach Delay [s/veh] | 53.76 | | | 39.02 | | | 82.69 | | | 0.00 | | |
| Approach LOS | D | | | D | | | F | | | A | | |
| d_I, Intersection Delay [s/veh] | 54.83 | | | | | | | | | | | |
| Intersection LOS | D | | | | | | | | | | | |
| Intersection V/C | 0.954 | | | | | | | | | | | |

## Sequence

| | | | | | | | | | | | | | | | | |
|---|---|---|---|---|---|---|---|---|---|---|---|---|---|---|---|---|
| Ring 1 | 1 | 2 | - | - | - | - | - | - | - | - | - | - | - | - | - | - |
| Ring 2 | - | 6 | 8 | - | - | - | - | - | - | - | - | - | - | - | - | - |
| Ring 3 | - | - | - | - | - | - | - | - | - | - | - | - | - | - | - | - |
| Ring 4 | - | - | - | - | - | - | - | - | - | - | - | - | - | - | - | - |

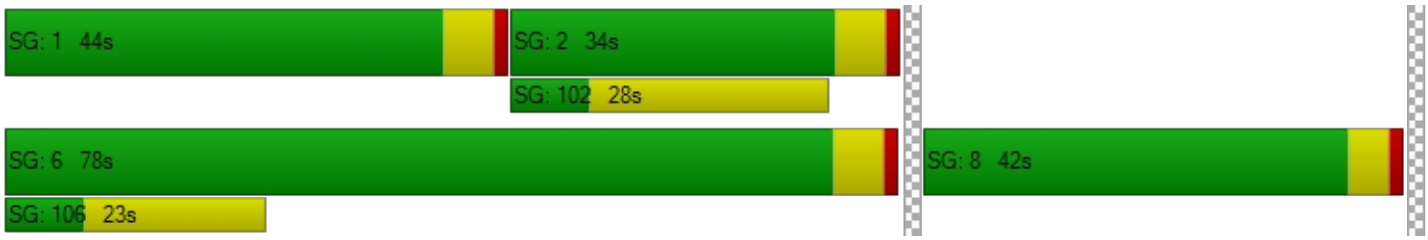

**Intersection Level Of Service Report**
**Intersection 16: Cedar Ave (NS) / Slover Ave (EW)**

| | | | |
|---|---|---|---|
| Control Type: | Signalized | Delay (sec / veh): | 33.6 |
| Analysis Method: | HCM 2010 | Level Of Service: | C |
| Analysis Period: | 15 minutes | Volume to Capacity (v/c): | 0.545 |

**Intersection Setup**

| Name | Cedar Avenue | | | Cedar Avenue | | | Slover Avenue | | | Slover Avenue | | |
|---|---|---|---|---|---|---|---|---|---|---|---|---|
| Approach | Northbound | | | Southbound | | | Eastbound | | | Westbound | | |
| Lane Configuration | | | | | | | | | | | | |
| Turning Movement | Left | Thru | Right | Left | Thru | Right | Left | Thru | Right | Left | Thru | Right |
| Lane Width [ft] | 12.00 | 12.00 | 12.00 | 12.00 | 12.00 | 12.00 | 12.00 | 12.00 | 12.00 | 12.00 | 12.00 | 12.00 |
| No. of Lanes in Pocket | 1 | 0 | 0 | 1 | 0 | 0 | 1 | 0 | 0 | 1 | 0 | 0 |
| Pocket Length [ft] | 200.00 | 100.00 | 100.00 | 85.00 | 100.00 | 100.00 | 185.00 | 100.00 | 100.00 | 150.00 | 100.00 | 100.00 |
| Speed [mph] | 45.00 | | | 45.00 | | | 50.00 | | | 50.00 | | |
| Grade [%] | 0.00 | | | 0.00 | | | 0.00 | | | 0.00 | | |
| Crosswalk | Yes | | | Yes | | | Yes | | | Yes | | |

**volumes**

| Name | Cedar Avenue | | | Cedar Avenue | | | Slover Avenue | | | Slover Avenue | | |
|---|---|---|---|---|---|---|---|---|---|---|---|---|
| Base Volume Input [veh/h] | 67 | 676 | 18 | 53 | 727 | 74 | 185 | 158 | 66 | 26 | 84 | 65 |
| Base Volume Adjustment Factor | 1.0000 | 1.0000 | 1.0000 | 1.0000 | 1.0000 | 1.0000 | 1.0000 | 1.0000 | 1.0000 | 1.0000 | 1.0000 | 1.0000 |
| Heavy Vehicles Percentage [%] | 5.00 | 5.00 | 5.00 | 5.00 | 5.00 | 5.00 | 2.00 | 2.00 | 2.00 | 2.00 | 2.00 | 2.00 |
| Growth Rate | 1.00 | 1.00 | 1.00 | 1.00 | 1.00 | 1.00 | 1.00 | 1.00 | 1.00 | 1.00 | 1.00 | 1.00 |
| In-Process Volume [veh/h] | 0 | 0 | 0 | 0 | 0 | 0 | 0 | 0 | 0 | 0 | 0 | 0 |
| Site-Generated Trips [veh/h] | 0 | 15 | 0 | 11 | 19 | 35 | 36 | 0 | 0 | 0 | 0 | 11 |
| Diverted Trips [veh/h] | 0 | 0 | 0 | 0 | 0 | 0 | 0 | 0 | 0 | 0 | 0 | 0 |
| Pass-by Trips [veh/h] | 0 | 0 | 0 | 0 | 0 | 0 | 0 | 0 | 0 | 0 | 0 | 0 |
| Existing Site Adjustment Volume [veh/h] | 0 | 0 | 0 | 0 | 0 | 0 | 0 | 0 | 0 | 0 | 0 | 0 |
| Other Volume [veh/h] | 0 | 0 | 0 | 0 | 0 | 0 | 0 | 0 | 0 | 0 | 0 | 0 |
| Right-Turn on Red Volume [veh/h] | 0 | 0 | 0 | 0 | 0 | 0 | 0 | 0 | 0 | 0 | 0 | 0 |
| Total Hourly Volume [veh/h] | 67 | 691 | 18 | 64 | 746 | 109 | 221 | 158 | 66 | 26 | 84 | 76 |
| Peak Hour Factor | 0.8589 | 0.8890 | 0.8890 | 0.8890 | 0.8890 | 0.8890 | 0.8890 | 0.8890 | 0.8890 | 0.8890 | 0.8890 | 0.8890 |
| Other Adjustment Factor | 1.0000 | 1.0000 | 1.0000 | 1.0000 | 1.0000 | 1.0000 | 1.0000 | 1.0000 | 1.0000 | 1.0000 | 1.0000 | 1.0000 |
| Total 15-Minute Volume [veh/h] | 20 | 194 | 5 | 18 | 210 | 31 | 62 | 44 | 19 | 7 | 24 | 21 |
| Total Analysis Volume [veh/h] | 78 | 777 | 20 | 72 | 839 | 123 | 249 | 178 | 74 | 29 | 94 | 85 |
| Presence of On-Street Parking | No | | No | No | | No | No | | No | No | | No |
| On-Street Parking Maneuver Rate [/h] | 0 | 0 | 0 | 0 | 0 | 0 | 0 | 0 | 0 | 0 | 0 | 0 |
| Local Bus Stopping Rate [/h] | 0 | 0 | 0 | 0 | 0 | 0 | 0 | 0 | 0 | 0 | 0 | 0 |
| Pedestrian Volume [ped/h] | 0 | | | 0 | | | 0 | | | 0 | | |
| Bicycle Volume [bicycles/h] | 0 | | | 0 | | | 0 | | | 0 | | |

**Intersection Settings**

| | |
|---|---|
| Located in CBD | No |
| Signal Coordination Group | 2 - NS - Cedar |
| Cycle Length [s] | 120 |
| Coordination Type | Time of Day Pattern Coordinated |
| Actuation Type | Fully actuated |
| Offset [s] | 49.0 |
| Offset Reference | LagFO |
| Permissive Mode | SingleBand |
| Lost time [s] | 16.00 |

**Phasing & Timing**

| Control Type | Protecte | Permiss | Permiss | Protecte | Permiss | Permiss | Protecte | Permiss | Permiss | Protecte | Permiss | Overlap |
|---|---|---|---|---|---|---|---|---|---|---|---|---|
| Signal group | 5 | 2 | 0 | 1 | 6 | 0 | 3 | 8 | 0 | 7 | 4 | 4 |
| Auxiliary Signal Groups | | | | | | | | | | | | 1,4 |
| Lead / Lag | Lead | - | - | Lead | - | - | Lead | - | - | Lead | - | - |
| Minimum Green [s] | 5 | 5 | 0 | 5 | 5 | 0 | 5 | 5 | 0 | 5 | 5 | 5 |
| Maximum Green [s] | 30 | 30 | 0 | 30 | 30 | 0 | 30 | 30 | 0 | 30 | 30 | 30 |
| Amber [s] | 4.8 | 4.8 | 0.0 | 4.8 | 4.8 | 0.0 | 5.2 | 5.2 | 0.0 | 5.2 | 5.2 | 5.2 |
| All red [s] | 1.0 | 1.0 | 0.0 | 1.0 | 1.0 | 0.0 | 1.0 | 1.0 | 0.0 | 1.0 | 1.0 | 1.0 |
| Split [s] | 11 | 44 | 0 | 11 | 44 | 0 | 20 | 53 | 0 | 12 | 45 | 45 |
| Vehicle Extension [s] | 3.0 | 3.0 | 0.0 | 3.0 | 3.0 | 0.0 | 3.0 | 3.0 | 0.0 | 3.0 | 3.0 | 3.0 |
| Walk [s] | 0 | 7 | 0 | 0 | 7 | 0 | 0 | 7 | 0 | 0 | 7 | 7 |
| Pedestrian Clearance [s] | 0 | 31 | 0 | 0 | 20 | 0 | 0 | 26 | 0 | 0 | 31 | 31 |
| I1, Start-Up Lost Time [s] | 2.0 | 2.0 | 0.0 | 2.0 | 2.0 | 0.0 | 2.0 | 2.0 | 0.0 | 2.0 | 2.0 | 2.0 |
| I2, Clearance Lost Time [s] | 3.8 | 3.8 | 0.0 | 3.8 | 3.8 | 0.0 | 4.2 | 4.2 | 0.0 | 4.2 | 4.2 | 4.2 |
| Minimum Recall | No | No | | No | No | | No | No | | No | No | No |
| Maximum Recall | No | No | | No | No | | No | No | | No | No | No |
| Pedestrian Recall | No | No | | No | No | | No | No | | No | No | No |
| Detector Location [ft] | 0.0 | 0.0 | 0.0 | 0.0 | 0.0 | 0.0 | 0.0 | 0.0 | 0.0 | 0.0 | 0.0 | 0.0 |
| Detector Length [ft] | 0.0 | 0.0 | 0.0 | 0.0 | 0.0 | 0.0 | 0.0 | 0.0 | 0.0 | 0.0 | 0.0 | 0.0 |
| I, Upstream Filtering Factor | 1.00 | 1.00 | 1.00 | 1.00 | 1.00 | 1.00 | 1.00 | 1.00 | 1.00 | 1.00 | 1.00 | 1.00 |

**Exclusive Pedestrian Phase**

| | |
|---|---|
| Pedestrian Signal Group | 0 |
| Pedestrian Walk [s] | 0 |
| Pedestrian Clearance [s] | 0 |

**Lane Group Calculations**

| Lane Group | L | C | C | L | C | C | L | C | L | C | R |
|---|---|---|---|---|---|---|---|---|---|---|---|
| L, Total Lost Time per Cycle [s] | 5.80 | 5.80 | 5.80 | 5.80 | 5.80 | 5.80 | 6.20 | 6.20 | 6.20 | 6.20 | 5.80 |
| l1_p, Permitted Start-Up Lost Time [s] | 0.00 | 0.00 | 0.00 | 0.00 | 0.00 | 0.00 | 0.00 | 0.00 | 0.00 | 0.00 | 0.00 |
| l2, Clearance Lost Time [s] | 0.00 | 3.80 | 3.80 | 0.00 | 3.80 | 3.80 | 4.20 | 4.20 | 4.20 | 4.20 | 0.00 |
| g_i, Effective Green Time [s] | 79 | 68 | 68 | 79 | 69 | 69 | 14 | 19 | 3 | 9 | 20 |
| g / C, Green / Cycle | 0.66 | 0.57 | 0.57 | 0.66 | 0.57 | 0.57 | 0.12 | 0.16 | 0.03 | 0.07 | 0.17 |
| (v / s)_i Volume / Saturation Flow Rate | 0.11 | 0.22 | 0.22 | 0.09 | 0.27 | 0.27 | 0.14 | 0.14 | 0.02 | 0.05 | 0.05 |
| s, saturation flow rate [veh/h] | 689 | 1810 | 1794 | 781 | 1810 | 1730 | 1774 | 1771 | 1774 | 1863 | 1583 |
| c, Capacity [veh/h] | 480 | 1028 | 1019 | 548 | 1037 | 991 | 205 | 285 | 47 | 135 | 266 |
| d1, Uniform Delay [s] | 3.74 | 7.39 | 7.39 | 3.17 | 7.48 | 7.48 | 53.12 | 49.27 | 57.82 | 54.41 | 43.91 |
| k, delay calibration | 0.50 | 0.50 | 0.50 | 0.50 | 0.50 | 0.50 | 0.45 | 0.11 | 0.11 | 0.11 | 0.28 |
| I, Upstream Filtering Factor | 1.00 | 1.00 | 1.00 | 1.00 | 1.00 | 1.00 | 1.00 | 1.00 | 1.00 | 1.00 | 1.00 |
| d2, Incremental Delay [s] | 0.73 | 1.11 | 1.12 | 0.50 | 1.56 | 1.63 | 130.36 | 8.84 | 12.04 | 6.34 | 1.75 |
| d3, Initial Queue Delay [s] | 0.00 | 0.00 | 0.00 | 0.00 | 0.00 | 0.00 | 0.00 | 0.00 | 0.00 | 0.00 | 0.00 |
| Rp, platoon ratio | 1.33 | 1.33 | 1.33 | 1.33 | 1.33 | 1.33 | 1.00 | 1.00 | 1.00 | 1.00 | 1.00 |
| PF, progression factor | 1.00 | 1.00 | 1.00 | 1.00 | 1.00 | 1.00 | 1.00 | 1.00 | 1.00 | 1.00 | 1.00 |

**Lane Group Results**

| | | | | | | | | | | | |
|---|---|---|---|---|---|---|---|---|---|---|---|
| X, volume / capacity | 0.16 | 0.39 | 0.39 | 0.13 | 0.47 | 0.47 | 1.22 | 0.88 | 0.61 | 0.70 | 0.32 |
| d, Delay for Lane Group [s/veh] | 4.47 | 8.50 | 8.51 | 3.67 | 9.04 | 9.11 | 183.47 | 58.12 | 69.86 | 60.76 | 45.66 |
| Lane Group LOS | A | A | A | A | A | A | F | E | E | E | D |
| Critical Lane Group | Yes | No | No | No | No | Yes | Yes | No | No | Yes | No |
| 50th-Percentile Queue Length [veh] | 0.31 | 3.08 | 3.05 | 0.27 | 3.84 | 3.69 | 13.37 | 7.81 | 1.00 | 2.93 | 2.28 |
| 50th-Percentile Queue Length [ft] | 7.77 | 76.93 | 76.33 | 6.82 | 95.99 | 92.26 | 334.21 | 195.20 | 25.10 | 73.15 | 57.08 |
| 95th-Percentile Queue Length [veh] | 0.56 | 5.54 | 5.50 | 0.49 | 6.91 | 6.64 | 20.92 | 12.39 | 1.81 | 5.27 | 4.11 |
| 95th-Percentile Queue Length [ft] | 13.99 | 138.48 | 137.40 | 12.28 | 172.78 | 166.07 | 522.92 | 309.77 | 45.19 | 131.67 | 102.74 |

**Movement, Approach, & Intersection Results**

| | | | | | | | | | | | | |
|---|---|---|---|---|---|---|---|---|---|---|---|---|
| d_M, Delay for Movement [s/veh] | 4.47 | 8.51 | 8.51 | 3.67 | 9.07 | 9.11 | 183.47 | 58.12 | 58.12 | 69.86 | 60.76 | 45.66 |
| Movement LOS | A | A | A | A | A | A | F | E | E | E | E | D |
| d_A, Approach Delay [s/veh] | 8.15 | | | 8.70 | | | 120.42 | | | 55.86 | | |
| Approach LOS | A | | | A | | | F | | | E | | |
| d_I, Intersection Delay [s/veh] | 33.64 | | | | | | | | | | | |
| Intersection LOS | C | | | | | | | | | | | |
| Intersection V/C | 0.545 | | | | | | | | | | | |

## Sequence

| | | | | | | | | | | | | | | | | |
|---|---|---|---|---|---|---|---|---|---|---|---|---|---|---|---|---|
| Ring 1 | 1 | 2 | 3 | 4 | - | - | - | - | - | - | - | - | - | - | - | - |
| Ring 2 | 5 | 6 | 7 | 8 | - | - | - | - | - | - | - | - | - | - | - | - |
| Ring 3 | - | - | - | - | - | - | - | - | - | - | - | - | - | - | - | - |
| Ring 4 | - | - | - | - | - | - | - | - | - | - | - | - | - | - | - | - |

# Existing plus Project with Improvements Level of Service Calculations

**Intersection Level Of Service Report**
**Intersection 1: Sierra Ave (NS) / San Bernardino Ave (EW)**

| | | | |
|---|---|---|---|
| Control Type: | Signalized | Delay (sec / veh): | 27.4 |
| Analysis Method: | HCM 2010 | Level Of Service: | C |
| Analysis Period: | 15 minutes | Volume to Capacity (v/c): | 0.589 |

**Intersection Setup**

| Name | Sierra Avenue | | | Sierra Avenue | | | San Bernardino Avenue | | | San Bernardino Avenue | | |
|---|---|---|---|---|---|---|---|---|---|---|---|---|
| Approach | Northbound | | | Southbound | | | Eastbound | | | Westbound | | |
| Lane Configuration | | | | | | | | | | | | |
| Turning Movement | Left | Thru | Right | Left | Thru | Right | Left | Thru | Right | Left | Thru | Right |
| Lane Width [ft] | 12.00 | 12.00 | 12.00 | 12.00 | 12.00 | 12.00 | 12.00 | 12.00 | 12.00 | 12.00 | 12.00 | 12.00 |
| No. of Lanes in Pocket | 1 | 0 | 1 | 1 | 0 | 0 | 1 | 0 | 0 | 1 | 0 | 0 |
| Pocket Length [ft] | 140.00 | 100.00 | 140.00 | 150.00 | 100.00 | 100.00 | 150.00 | 100.00 | 100.00 | 240.00 | 100.00 | 100.00 |
| Speed [mph] | 35.00 | | | 35.00 | | | 35.00 | | | 30.00 | | |
| Grade [%] | 0.00 | | | 0.00 | | | 0.00 | | | 0.00 | | |
| Crosswalk | Yes | | | Yes | | | Yes | | | Yes | | |

**volumes**

| Name | Sierra Avenue | | | Sierra Avenue | | | San Bernardino Avenue | | | San Bernardino Avenue | | |
|---|---|---|---|---|---|---|---|---|---|---|---|---|
| Base Volume Input [veh/h] | 51 | 621 | 106 | 34 | 893 | 35 | 47 | 193 | 74 | 223 | 186 | 27 |
| Base Volume Adjustment Factor | 1.0000 | 1.0000 | 1.0000 | 1.0000 | 1.0000 | 1.0000 | 1.0000 | 1.0000 | 1.0000 | 1.0000 | 1.0000 | 1.0000 |
| Heavy Vehicles Percentage [%] | 2.00 | 2.00 | 2.00 | 2.00 | 2.00 | 2.00 | 2.00 | 2.00 | 2.00 | 2.00 | 2.00 | 2.00 |
| Growth Rate | 1.00 | 1.00 | 1.00 | 1.00 | 1.00 | 1.00 | 1.00 | 1.00 | 1.00 | 1.00 | 1.00 | 1.00 |
| In-Process Volume [veh/h] | 0 | 0 | 0 | 0 | 0 | 0 | 0 | 0 | 0 | 0 | 0 | 0 |
| Site-Generated Trips [veh/h] | 5 | 5 | 0 | 0 | 11 | 0 | 0 | 0 | 11 | 0 | 0 | 0 |
| Diverted Trips [veh/h] | 0 | 0 | 0 | 0 | 0 | 0 | 0 | 0 | 0 | 0 | 0 | 0 |
| Pass-by Trips [veh/h] | 0 | 0 | 0 | 0 | 0 | 0 | 0 | 0 | 0 | 0 | 0 | 0 |
| Existing Site Adjustment Volume [veh/h] | 0 | 0 | 0 | 0 | 0 | 0 | 0 | 0 | 0 | 0 | 0 | 0 |
| Other Volume [veh/h] | 0 | 0 | 0 | 0 | 0 | 0 | 0 | 0 | 0 | 0 | 0 | 0 |
| Right-Turn on Red Volume [veh/h] | 0 | 0 | 0 | 0 | 0 | 0 | 0 | 0 | 0 | 0 | 0 | 0 |
| Total Hourly Volume [veh/h] | 56 | 626 | 106 | 34 | 904 | 35 | 47 | 193 | 85 | 223 | 186 | 27 |
| Peak Hour Factor | 0.9020 | 0.9020 | 0.9020 | 0.9020 | 0.9200 | 0.9020 | 0.9020 | 0.9020 | 0.9020 | 0.9020 | 0.9020 | 0.9020 |
| Other Adjustment Factor | 1.0000 | 1.0000 | 1.0000 | 1.0000 | 1.0000 | 1.0000 | 1.0000 | 1.0000 | 1.0000 | 1.0000 | 1.0000 | 1.0000 |
| Total 15-Minute Volume [veh/h] | 16 | 174 | 29 | 9 | 246 | 10 | 13 | 53 | 24 | 62 | 52 | 7 |
| Total Analysis Volume [veh/h] | 62 | 694 | 118 | 38 | 983 | 39 | 52 | 214 | 94 | 247 | 206 | 30 |
| Presence of On-Street Parking | No | | No | No | | No | No | | No | No | | No |
| On-Street Parking Maneuver Rate [/h] | 0 | 0 | 0 | 0 | 0 | 0 | 0 | 0 | 0 | 0 | 0 | 0 |
| Local Bus Stopping Rate [/h] | 0 | 0 | 0 | 0 | 0 | 0 | 0 | 0 | 0 | 0 | 0 | 0 |
| Pedestrian Volume [ped/h] | 0 | | | 0 | | | 0 | | | 0 | | |
| Bicycle Volume [bicycles/h] | 0 | | | 0 | | | 0 | | | 0 | | |

**Intersection Settings**

| | |
|---|---|
| Located in CBD | No |
| Signal Coordination Group | 1 - NS - Sierra |
| Cycle Length [s] | 120 |
| Coordination Type | Time of Day Pattern Coordinated |
| Actuation Type | Fully actuated |
| Offset [s] | 0.0 |
| Offset Reference | LagFO |
| Permissive Mode | SingleBand |
| Lost time [s] | 16.00 |

**Phasing & Timing**

| Control Type | Protecte | Permiss | Permiss | Protecte | Permiss | Permiss | Protecte | Permiss | Overlap | Protecte | Permiss | Permiss |
|---|---|---|---|---|---|---|---|---|---|---|---|---|
| Signal group | 5 | 2 | 0 | 1 | 6 | 0 | 3 | 8 | 8 | 7 | 4 | 0 |
| Auxiliary Signal Groups | | | | | | | | | 5,8 | | | |
| Lead / Lag | Lead | - | - | Lead | - | - | Lead | - | - | Lead | - | - |
| Minimum Green [s] | 5 | 5 | 0 | 5 | 5 | 0 | 5 | 5 | 5 | 5 | 5 | 0 |
| Maximum Green [s] | 30 | 30 | 0 | 30 | 30 | 0 | 30 | 30 | 30 | 30 | 30 | 0 |
| Amber [s] | 4.1 | 4.1 | 0.0 | 4.1 | 4.1 | 0.0 | 4.1 | 4.1 | 4.1 | 3.7 | 3.7 | 0.0 |
| All red [s] | 1.0 | 1.0 | 0.0 | 1.0 | 1.0 | 0.0 | 1.0 | 1.0 | 1.0 | 1.0 | 1.0 | 0.0 |
| Split [s] | 11 | 46 | 0 | 11 | 46 | 0 | 13 | 41 | 41 | 22 | 50 | 0 |
| Vehicle Extension [s] | 3.0 | 3.0 | 0.0 | 3.0 | 3.0 | 0.0 | 3.0 | 3.0 | 3.0 | 3.0 | 3.0 | 0.0 |
| Walk [s] | 0 | 7 | 0 | 0 | 7 | 0 | 0 | 7 | 7 | 0 | 7 | 0 |
| Pedestrian Clearance [s] | 0 | 22 | 0 | 0 | 23 | 0 | 0 | 28 | 28 | 0 | 25 | 0 |
| I1, Start-Up Lost Time [s] | 2.0 | 2.0 | 0.0 | 2.0 | 2.0 | 0.0 | 2.0 | 2.0 | 2.0 | 2.0 | 2.0 | 0.0 |
| I2, Clearance Lost Time [s] | 3.1 | 3.1 | 0.0 | 3.1 | 3.1 | 0.0 | 3.1 | 3.1 | 3.1 | 2.7 | 2.7 | 0.0 |
| Minimum Recall | No | No | | No | No | | No | No | No | No | No | |
| Maximum Recall | No | No | | No | No | | No | No | No | No | No | |
| Pedestrian Recall | No | No | | No | No | | No | No | No | No | No | |
| Detector Location [ft] | 0.0 | 0.0 | 0.0 | 0.0 | 0.0 | 0.0 | 0.0 | 0.0 | 0.0 | 0.0 | 0.0 | 0.0 |
| Detector Length [ft] | 0.0 | 0.0 | 0.0 | 0.0 | 0.0 | 0.0 | 0.0 | 0.0 | 0.0 | 0.0 | 0.0 | 0.0 |
| I, Upstream Filtering Factor | 1.00 | 1.00 | 1.00 | 1.00 | 1.00 | 1.00 | 1.00 | 1.00 | 1.00 | 1.00 | 1.00 | 1.00 |

**Exclusive Pedestrian Phase**

| | |
|---|---|
| Pedestrian Signal Group | 0 |
| Pedestrian Walk [s] | 0 |
| Pedestrian Clearance [s] | 0 |

**Lane Group Calculations**

| Lane Group | L | C | R | L | C | C | L | C | R | L | C | C |
|---|---|---|---|---|---|---|---|---|---|---|---|---|
| L, Total Lost Time per Cycle [s] | 5.10 | 5.10 | 5.10 | 5.10 | 5.10 | 5.10 | 5.10 | 5.10 | 5.10 | 4.70 | 4.70 | 4.70 |
| l1_p, Permitted Start-Up Lost Time [s] | 0.00 | 0.00 | 0.00 | 0.00 | 0.00 | 0.00 | 0.00 | 0.00 | 0.00 | 0.00 | 0.00 | 0.00 |
| l2, Clearance Lost Time [s] | 3.10 | 3.10 | 3.10 | 3.10 | 3.10 | 3.10 | 3.10 | 3.10 | 0.00 | 2.70 | 2.70 | 2.70 |
| g_i, Effective Green Time [s] | 6 | 69 | 69 | 4 | 67 | 67 | 5 | 10 | 21 | 17 | 23 | 23 |
| g / C, Green / Cycle | 0.05 | 0.58 | 0.58 | 0.03 | 0.56 | 0.56 | 0.04 | 0.08 | 0.17 | 0.14 | 0.19 | 0.19 |
| (v / s)_i Volume / Saturation Flow Rate | 0.03 | 0.20 | 0.07 | 0.02 | 0.28 | 0.28 | 0.03 | 0.06 | 0.06 | 0.14 | 0.06 | 0.07 |
| s, saturation flow rate [veh/h] | 1774 | 3547 | 1583 | 1774 | 1863 | 1838 | 1774 | 3547 | 1583 | 1774 | 1863 | 1781 |
| c, Capacity [veh/h] | 89 | 2045 | 913 | 55 | 1038 | 1024 | 68 | 290 | 276 | 256 | 349 | 334 |
| d1, Uniform Delay [s] | 55.16 | 6.73 | 6.15 | 57.01 | 8.55 | 8.55 | 57.17 | 53.89 | 43.55 | 51.05 | 42.36 | 42.39 |
| k, delay calibration | 0.11 | 0.50 | 0.50 | 0.11 | 0.50 | 0.50 | 0.11 | 0.11 | 0.34 | 0.37 | 0.11 | 0.11 |
| I, Upstream Filtering Factor | 1.00 | 1.00 | 1.00 | 1.00 | 1.00 | 1.00 | 1.00 | 1.00 | 1.00 | 1.00 | 1.00 | 1.00 |
| d2, Incremental Delay [s] | 9.57 | 0.45 | 0.29 | 14.62 | 1.69 | 1.71 | 15.73 | 3.69 | 2.26 | 40.07 | 0.58 | 0.62 |
| d3, Initial Queue Delay [s] | 0.00 | 0.00 | 0.00 | 0.00 | 0.00 | 0.00 | 0.00 | 0.00 | 0.00 | 0.00 | 0.00 | 0.00 |
| Rp, platoon ratio | 1.33 | 1.33 | 1.33 | 1.33 | 1.33 | 1.33 | 1.00 | 1.00 | 1.00 | 1.00 | 1.00 | 1.00 |
| PF, progression factor | 1.00 | 1.00 | 1.00 | 1.00 | 1.00 | 1.00 | 1.00 | 1.00 | 1.00 | 1.00 | 1.00 | 1.00 |

**Lane Group Results**

| | | | | | | | | | | | | |
|---|---|---|---|---|---|---|---|---|---|---|---|---|
| X, volume / capacity | 0.70 | 0.34 | 0.13 | 0.69 | 0.50 | 0.50 | 0.76 | 0.74 | 0.34 | 0.96 | 0.34 | 0.35 |
| d, Delay for Lane Group [s/veh] | 64.74 | 7.19 | 6.44 | 71.64 | 10.24 | 10.27 | 72.90 | 57.58 | 45.81 | 91.12 | 42.94 | 43.01 |
| Lane Group LOS | E | A | A | E | B | B | E | E | D | F | D | D |
| Critical Lane Group | Yes | No | No | No | No | Yes | No | Yes | No | Yes | No | No |
| 50th-Percentile Queue Length [veh] | 2.04 | 2.45 | 0.81 | 1.34 | 4.61 | 4.55 | 1.85 | 3.28 | 2.62 | 10.21 | 3.16 | 3.06 |
| 50th-Percentile Queue Length [ft] | 50.97 | 61.30 | 20.25 | 33.62 | 115.17 | 113.81 | 46.26 | 82.05 | 65.42 | 255.32 | 79.01 | 76.54 |
| 95th-Percentile Queue Length [veh] | 3.67 | 4.41 | 1.46 | 2.42 | 8.13 | 8.05 | 3.33 | 5.91 | 4.71 | 15.45 | 5.69 | 5.51 |
| 95th-Percentile Queue Length [ft] | 91.74 | 110.34 | 36.45 | 60.51 | 203.18 | 201.29 | 83.26 | 147.70 | 117.75 | 386.35 | 142.22 | 137.77 |

**Movement, Approach, & Intersection Results**

| | | | | | | | | | | | | |
|---|---|---|---|---|---|---|---|---|---|---|---|---|
| d_M, Delay for Movement [s/veh] | 64.74 | 7.19 | 6.44 | 71.64 | 10.26 | 10.27 | 72.90 | 57.58 | 45.81 | 91.12 | 42.97 | 43.01 |
| Movement LOS | E | A | A | E | B | B | E | E | D | F | D | D |
| d_A, Approach Delay [s/veh] | 11.17 | | | 12.46 | | | 56.72 | | | 67.60 | | |
| Approach LOS | B | | | B | | | E | | | E | | |
| d_I, Intersection Delay [s/veh] | 27.38 | | | | | | | | | | | |
| Intersection LOS | C | | | | | | | | | | | |
| Intersection V/C | 0.589 | | | | | | | | | | | |

## Sequence

| | | | | | | | | | | | | | | | | |
|---|---|---|---|---|---|---|---|---|---|---|---|---|---|---|---|---|
| Ring 1 | 1 | 2 | 3 | 4 | - | - | - | - | - | - | - | - | - | - | - | - |
| Ring 2 | 5 | 6 | 7 | 8 | - | - | - | - | - | - | - | - | - | - | - | - |
| Ring 3 | - | - | - | - | - | - | - | - | - | - | - | - | - | - | - | - |
| Ring 4 | - | - | - | - | - | - | - | - | - | - | - | - | - | - | - | - |

**Intersection Level Of Service Report**
**Intersection 2: Sierra Ave (NS) / Valley Blvd (EW)**

| | | | |
|---|---|---|---|
| Control Type: | Signalized | Delay (sec / veh): | 28.9 |
| Analysis Method: | HCM 2010 | Level Of Service: | C |
| Analysis Period: | 15 minutes | Volume to Capacity (v/c): | 0.941 |

**Intersection Setup**

| Name | Sierra Avenue | | | Sierra Avenue | | | Valley Boulevard | | | Valley Boulevard | | |
|---|---|---|---|---|---|---|---|---|---|---|---|---|
| Approach | Northbound | | | Southbound | | | Eastbound | | | Westbound | | |
| Lane Configuration | | | | | | | | | | | | |
| Turning Movement | Left | Thru | Right | Left | Thru | Right | Left | Thru | Right | Left | Thru | Right |
| Lane Width [ft] | 12.00 | 12.00 | 12.00 | 12.00 | 12.00 | 12.00 | 12.00 | 12.00 | 12.00 | 12.00 | 12.00 | 12.00 |
| No. of Lanes in Pocket | 2 | 0 | 0 | 2 | 0 | 0 | 2 | 0 | 0 | 2 | 0 | 0 |
| Pocket Length [ft] | 370.00 | 100.00 | 100.00 | 165.00 | 100.00 | 100.00 | 260.00 | 100.00 | 100.00 | 355.00 | 100.00 | 100.00 |
| Speed [mph] | 35.00 | | | 35.00 | | | 40.00 | | | 40.00 | | |
| Grade [%] | 0.00 | | | 0.00 | | | 0.00 | | | 0.00 | | |
| Crosswalk | Yes | | | Yes | | | Yes | | | Yes | | |

**volumes**

| Name | Sierra Avenue | | | Sierra Avenue | | | Valley Boulevard | | | Valley Boulevard | | |
|---|---|---|---|---|---|---|---|---|---|---|---|---|
| Base Volume Input [veh/h] | 169 | 1085 | 948 | 58 | 1252 | 74 | 96 | 240 | 293 | 590 | 300 | 97 |
| Base Volume Adjustment Factor | 1.0000 | 1.0000 | 1.0000 | 1.0000 | 1.0000 | 1.0000 | 1.0000 | 1.0000 | 1.0000 | 1.0000 | 1.0000 | 1.0000 |
| Heavy Vehicles Percentage [%] | 2.00 | 2.00 | 2.00 | 2.00 | 2.00 | 2.00 | 4.00 | 4.00 | 4.00 | 4.00 | 4.00 | 4.00 |
| Growth Rate | 1.00 | 1.00 | 1.00 | 1.00 | 1.00 | 1.00 | 1.00 | 1.00 | 1.00 | 1.00 | 1.00 | 1.00 |
| In-Process Volume [veh/h] | 0 | 0 | 0 | 0 | 0 | 0 | 0 | 0 | 0 | 0 | 0 | 0 |
| Site-Generated Trips [veh/h] | 0 | 0 | 33 | 34 | 0 | 0 | 0 | 5 | 0 | 23 | 10 | 15 |
| Diverted Trips [veh/h] | 0 | 0 | 0 | 0 | 0 | 0 | 0 | 0 | 0 | 0 | 0 | 0 |
| Pass-by Trips [veh/h] | 0 | 0 | 0 | 0 | 0 | 0 | 0 | 0 | 0 | 0 | 0 | 0 |
| Existing Site Adjustment Volume [veh/h] | 0 | 0 | 0 | 0 | 0 | 0 | 0 | 0 | 0 | 0 | 0 | 0 |
| Other Volume [veh/h] | 0 | 0 | 0 | 0 | 0 | 0 | 0 | 0 | 0 | 0 | 0 | 0 |
| Right-Turn on Red Volume [veh/h] | 0 | 0 | 0 | 0 | 0 | 0 | 0 | 0 | 0 | 0 | 0 | 0 |
| Total Hourly Volume [veh/h] | 169 | 1085 | 981 | 92 | 1252 | 74 | 96 | 245 | 293 | 613 | 310 | 112 |
| Peak Hour Factor | 0.9720 | 0.9720 | 0.9720 | 0.9720 | 0.9720 | 0.9720 | 0.9720 | 0.9720 | 0.9720 | 0.9720 | 0.9720 | 0.9720 |
| Other Adjustment Factor | 1.0000 | 1.0000 | 1.0000 | 1.0000 | 1.0000 | 1.0000 | 1.0000 | 1.0000 | 1.0000 | 1.0000 | 1.0000 | 1.0000 |
| Total 15-Minute Volume [veh/h] | 43 | 279 | 252 | 24 | 322 | 19 | 25 | 63 | 75 | 158 | 80 | 29 |
| Total Analysis Volume [veh/h] | 174 | 1116 | 1009 | 95 | 1288 | 76 | 99 | 252 | 301 | 631 | 319 | 115 |
| Presence of On-Street Parking | No | | No | No | | No | No | | No | No | | No |
| On-Street Parking Maneuver Rate [/h] | 0 | 0 | 0 | 0 | 0 | 0 | 0 | 0 | 0 | 0 | 0 | 0 |
| Local Bus Stopping Rate [/h] | 0 | 0 | 0 | 0 | 0 | 0 | 0 | 0 | 0 | 0 | 0 | 0 |
| Pedestrian Volume [ped/h] | 0 | | | 0 | | | 0 | | | 0 | | |
| Bicycle Volume [bicycles/h] | 0 | | | 0 | | | 0 | | | 0 | | |

**Intersection Settings**

| | |
|---|---|
| Located in CBD | No |
| Signal Coordination Group | 1 - NS - Sierra |
| Cycle Length [s] | 120 |
| Coordination Type | Time of Day Pattern Coordinated |
| Actuation Type | Fully actuated |
| Offset [s] | 69.0 |
| Offset Reference | LagFO |
| Permissive Mode | SingleBand |
| Lost time [s] | 16.00 |

**Phasing & Timing**

| Control Type | Protecte | Permiss | Overlap | Protecte | Permiss | Overlap | Protecte | Permiss | Overlap | Protecte | Permiss | Overlap |
|---|---|---|---|---|---|---|---|---|---|---|---|---|
| Signal group | 5 | 2 | 2 | 1 | 6 | 6 | 3 | 8 | 8 | 7 | 4 | 4 |
| Auxiliary Signal Groups | | | 2,7 | | | 3,6 | | | 5,8 | | | 1,4 |
| Lead / Lag | Lead | - | - | Lead | - | - | Lead | - | - | Lead | - | - |
| Minimum Green [s] | 5 | 5 | 5 | 5 | 5 | 5 | 5 | 5 | 5 | 5 | 5 | 5 |
| Maximum Green [s] | 30 | 30 | 30 | 30 | 30 | 30 | 30 | 30 | 30 | 30 | 30 | 30 |
| Amber [s] | 4.1 | 4.1 | 4.1 | 4.1 | 4.1 | 4.1 | 4.4 | 4.4 | 4.4 | 4.4 | 4.4 | 4.4 |
| All red [s] | 1.0 | 1.0 | 1.0 | 1.0 | 1.0 | 1.0 | 1.0 | 1.0 | 1.0 | 1.0 | 1.0 | 1.0 |
| Split [s] | 14 | 60 | 60 | 11 | 57 | 57 | 12 | 21 | 21 | 28 | 37 | 37 |
| Vehicle Extension [s] | 3.0 | 3.0 | 3.0 | 3.0 | 3.0 | 3.0 | 3.0 | 3.0 | 3.0 | 3.0 | 3.0 | 3.0 |
| Walk [s] | 0 | 7 | 7 | 0 | 7 | 7 | 0 | 5 | 5 | 0 | 5 | 5 |
| Pedestrian Clearance [s] | 0 | 24 | 24 | 0 | 26 | 26 | 0 | 10 | 10 | 0 | 10 | 10 |
| I1, Start-Up Lost Time [s] | 2.0 | 2.0 | 2.0 | 2.0 | 2.0 | 2.0 | 2.0 | 2.0 | 2.0 | 2.0 | 2.0 | 2.0 |
| I2, Clearance Lost Time [s] | 3.1 | 3.1 | 3.1 | 3.1 | 3.1 | 3.1 | 3.4 | 3.4 | 3.4 | 3.4 | 3.4 | 3.4 |
| Minimum Recall | No | No | No | No | No | No | No | No | No | No | No | No |
| Maximum Recall | No | No | No | No | No | No | No | No | No | No | No | No |
| Pedestrian Recall | No | No | No | No | No | No | No | No | No | No | No | No |
| Detector Location [ft] | 0.0 | 0.0 | 0.0 | 0.0 | 0.0 | 0.0 | 0.0 | 0.0 | 0.0 | 0.0 | 0.0 | 0.0 |
| Detector Length [ft] | 0.0 | 0.0 | 0.0 | 0.0 | 0.0 | 0.0 | 0.0 | 0.0 | 0.0 | 0.0 | 0.0 | 0.0 |
| I, Upstream Filtering Factor | 1.00 | 1.00 | 1.00 | 1.00 | 1.00 | 1.00 | 1.00 | 1.00 | 1.00 | 1.00 | 1.00 | 1.00 |

**Exclusive Pedestrian Phase**

| | |
|---|---|
| Pedestrian Signal Group | 0 |
| Pedestrian Walk [s] | 0 |
| Pedestrian Clearance [s] | 0 |

**Lane Group Calculations**

| Lane Group | L | C | R | L | C | R | L | C | R | L | C | R |
|---|---|---|---|---|---|---|---|---|---|---|---|---|
| L, Total Lost Time per Cycle [s] | 5.10 | 5.10 | 5.40 | 5.10 | 5.10 | 5.40 | 5.40 | 5.40 | 5.10 | 5.40 | 5.40 | 5.10 |
| l1_p, Permitted Start-Up Lost Time [s] | 0.00 | 0.00 | 0.00 | 0.00 | 0.00 | 0.00 | 0.00 | 0.00 | 0.00 | 0.00 | 0.00 | 0.00 |
| l2, Clearance Lost Time [s] | 3.10 | 3.10 | 0.00 | 3.10 | 3.10 | 0.00 | 3.40 | 3.40 | 0.00 | 3.40 | 3.40 | 0.00 |
| g_i, Effective Green Time [s] | 9 | 59 | 87 | 6 | 56 | 67 | 5 | 11 | 26 | 23 | 29 | 40 |
| g / C, Green / Cycle | 0.07 | 0.49 | 0.72 | 0.05 | 0.47 | 0.55 | 0.04 | 0.09 | 0.21 | 0.19 | 0.24 | 0.33 |
| (v / s)_i Volume / Saturation Flow Rate | 0.05 | 0.31 | 0.64 | 0.03 | 0.25 | 0.05 | 0.03 | 0.07 | 0.19 | 0.19 | 0.09 | 0.07 |
| s, saturation flow rate [veh/h] | 3445 | 3547 | 1583 | 3445 | 5074 | 1583 | 3379 | 3478 | 1553 | 3379 | 3478 | 1553 |
| c, Capacity [veh/h] | 260 | 1746 | 1145 | 175 | 2372 | 877 | 148 | 326 | 333 | 637 | 830 | 519 |
| d1, Uniform Delay [s] | 52.59 | 14.33 | 0.92 | 54.68 | 15.33 | 7.23 | 55.73 | 51.33 | 41.75 | 44.87 | 34.11 | 23.69 |
| k, delay calibration | 0.11 | 0.50 | 0.50 | 0.11 | 0.50 | 0.17 | 0.11 | 0.11 | 0.50 | 0.11 | 0.11 | 0.49 |
| I, Upstream Filtering Factor | 1.00 | 1.00 | 1.00 | 1.00 | 1.00 | 1.00 | 1.00 | 1.00 | 1.00 | 1.00 | 1.00 | 1.00 |
| d2, Incremental Delay [s] | 2.97 | 1.81 | 9.84 | 2.63 | 0.90 | 0.07 | 5.17 | 3.90 | 30.22 | 14.47 | 0.29 | 0.97 |
| d3, Initial Queue Delay [s] | 0.00 | 0.00 | 0.00 | 0.00 | 0.00 | 0.00 | 0.00 | 0.00 | 0.00 | 0.00 | 0.00 | 0.00 |
| Rp, platoon ratio | 1.33 | 1.33 | 1.33 | 1.33 | 1.33 | 1.33 | 1.33 | 1.33 | 1.33 | 1.33 | 1.33 | 1.33 |
| PF, progression factor | 1.00 | 1.00 | 1.00 | 1.00 | 1.00 | 1.00 | 1.00 | 1.00 | 1.00 | 1.00 | 1.00 | 1.00 |

**Lane Group Results**

| | | | | | | | | | | | | |
|---|---|---|---|---|---|---|---|---|---|---|---|---|
| X, volume / capacity | 0.67 | 0.64 | 0.88 | 0.54 | 0.54 | 0.09 | 0.67 | 0.77 | 0.91 | 0.99 | 0.38 | 0.22 |
| d, Delay for Lane Group [s/veh] | 55.57 | 16.14 | 10.76 | 57.31 | 16.22 | 7.30 | 60.90 | 55.22 | 71.97 | 59.34 | 34.40 | 24.66 |
| Lane Group LOS | E | B | B | E | B | A | E | E | E | E | C | C |
| Critical Lane Group | No | No | Yes | Yes | No | No | No | No | Yes | Yes | No | No |
| 50th-Percentile Queue Length [veh] | 2.58 | 7.43 | 3.96 | 1.43 | 5.63 | 0.56 | 1.54 | 3.70 | 10.52 | 9.90 | 3.46 | 2.07 |
| 50th-Percentile Queue Length [ft] | 64.45 | 185.64 | 99.05 | 35.87 | 140.81 | 13.89 | 38.53 | 92.40 | 262.96 | 247.58 | 86.60 | 51.68 |
| 95th-Percentile Queue Length [veh] | 4.64 | 11.89 | 7.13 | 2.58 | 9.52 | 1.00 | 2.77 | 6.65 | 15.84 | 15.06 | 6.24 | 3.72 |
| 95th-Percentile Queue Length [ft] | 116.01 | 297.36 | 178.29 | 64.56 | 238.12 | 25.00 | 69.36 | 166.32 | 395.94 | 376.60 | 155.89 | 93.03 |

**Movement, Approach, & Intersection Results**

| | | | | | | | | | | | | |
|---|---|---|---|---|---|---|---|---|---|---|---|---|
| d_M, Delay for Movement [s/veh] | 55.57 | 16.14 | 10.76 | 57.31 | 16.22 | 7.30 | 60.90 | 55.22 | 71.97 | 59.34 | 34.40 | 24.66 |
| Movement LOS | E | B | B | E | B | A | E | E | E | E | C | C |
| d_A, Approach Delay [s/veh] | 16.76 | | | 18.43 | | | 63.82 | | | 48.13 | | |
| Approach LOS | B | | | B | | | E | | | D | | |
| d_I, Intersection Delay [s/veh] | 28.91 | | | | | | | | | | | |
| Intersection LOS | C | | | | | | | | | | | |
| Intersection V/C | 0.941 | | | | | | | | | | | |

## Sequence

| | | | | | | | | | | | | | | | | |
|---|---|---|---|---|---|---|---|---|---|---|---|---|---|---|---|---|
| Ring 1 | 1 | 2 | 3 | 4 | - | - | - | - | - | - | - | - | - | - | - | - |
| Ring 2 | 5 | 6 | 7 | 8 | - | - | - | - | - | - | - | - | - | - | - | - |
| Ring 3 | - | - | - | - | - | - | - | - | - | - | - | - | - | - | - | - |
| Ring 4 | - | - | - | - | - | - | - | - | - | - | - | - | - | - | - | - |

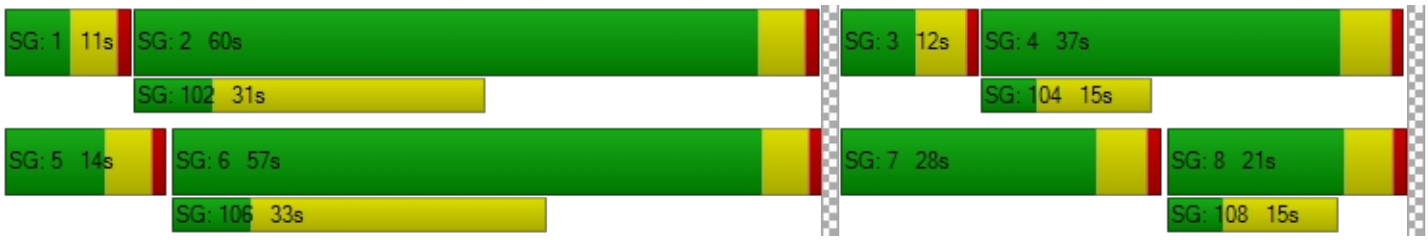

**Intersection Level Of Service Report**
**Intersection 7: Alder Ave (NS) / Marygold Ave (EW)**

| | | | |
|---|---|---|---|
| Control Type: | Signalized | Delay (sec / veh): | 13.3 |
| Analysis Method: | HCM 2010 | Level Of Service: | B |
| Analysis Period: | 15 minutes | Volume to Capacity (v/c): | 0.319 |

**Intersection Setup**

| Name | Alder Avenue | | | Alder Avenue | | | Marygold Avenue | | | Marygold Avenue | | |
|---|---|---|---|---|---|---|---|---|---|---|---|---|
| Approach | Northbound | | | Southbound | | | Eastbound | | | Westbound | | |
| Lane Configuration | | | | | | | | | | | | |
| Turning Movement | Left | Thru | Right | Left | Thru | Right | Left | Thru | Right | Left | Thru | Right |
| Lane Width [ft] | 12.00 | 12.00 | 12.00 | 12.00 | 12.00 | 12.00 | 12.00 | 12.00 | 12.00 | 12.00 | 12.00 | 12.00 |
| No. of Lanes in Pocket | 0 | 0 | 1 | 0 | 0 | 0 | 0 | 0 | 0 | 0 | 0 | 0 |
| Pocket Length [ft] | 100.00 | 100.00 | 200.00 | 100.00 | 100.00 | 100.00 | 100.00 | 100.00 | 100.00 | 100.00 | 100.00 | 100.00 |
| Speed [mph] | 40.00 | | | 40.00 | | | 35.00 | | | 25.00 | | |
| Grade [%] | 0.00 | | | 0.00 | | | 0.00 | | | 0.00 | | |
| Crosswalk | Yes | | | Yes | | | Yes | | | Yes | | |

**volumes**

| Name | Alder Avenue | | | Alder Avenue | | | Marygold Avenue | | | Marygold Avenue | | |
|---|---|---|---|---|---|---|---|---|---|---|---|---|
| Base Volume Input [veh/h] | 11 | 195 | 15 | 40 | 255 | 123 | 41 | 45 | 15 | 11 | 102 | 17 |
| Base Volume Adjustment Factor | 1.0000 | 1.0000 | 1.0000 | 1.0000 | 1.0000 | 1.0000 | 1.0000 | 1.0000 | 1.0000 | 1.0000 | 1.0000 | 1.0000 |
| Heavy Vehicles Percentage [%] | 2.00 | 2.00 | 2.00 | 2.00 | 2.00 | 2.00 | 2.00 | 2.00 | 2.00 | 2.00 | 2.00 | 2.00 |
| Growth Rate | 1.00 | 1.00 | 1.00 | 1.00 | 1.00 | 1.00 | 1.00 | 1.00 | 1.00 | 1.00 | 1.00 | 1.00 |
| In-Process Volume [veh/h] | 0 | 0 | 0 | 0 | 0 | 0 | 0 | 0 | 0 | 0 | 0 | 0 |
| Site-Generated Trips [veh/h] | 1 | 20 | 8 | 0 | 48 | 0 | 0 | 8 | 5 | 18 | 20 | 0 |
| Diverted Trips [veh/h] | 0 | 0 | 0 | 0 | 0 | 0 | 0 | 0 | 0 | 0 | 0 | 0 |
| Pass-by Trips [veh/h] | 0 | 0 | 0 | 0 | 0 | 0 | 0 | 0 | 0 | 0 | 0 | 0 |
| Existing Site Adjustment Volume [veh/h] | 0 | 0 | 0 | 0 | 0 | 0 | 0 | 0 | 0 | 0 | 0 | 0 |
| Other Volume [veh/h] | 0 | 0 | 0 | 0 | 0 | 0 | 0 | 0 | 0 | 0 | 0 | 0 |
| Right-Turn on Red Volume [veh/h] | 0 | 0 | 0 | 0 | 0 | 0 | 0 | 0 | 0 | 0 | 0 | 0 |
| Total Hourly Volume [veh/h] | 12 | 215 | 23 | 40 | 303 | 123 | 41 | 53 | 20 | 29 | 122 | 17 |
| Peak Hour Factor | 0.9220 | 0.9220 | 0.9220 | 0.9220 | 0.9220 | 0.9220 | 0.9220 | 0.9220 | 0.9220 | 0.9220 | 0.9220 | 0.9220 |
| Other Adjustment Factor | 1.0000 | 1.0000 | 1.0000 | 1.0000 | 1.0000 | 1.0000 | 1.0000 | 1.0000 | 1.0000 | 1.0000 | 1.0000 | 1.0000 |
| Total 15-Minute Volume [veh/h] | 3 | 58 | 6 | 11 | 82 | 33 | 11 | 14 | 5 | 8 | 33 | 5 |
| Total Analysis Volume [veh/h] | 13 | 233 | 25 | 43 | 329 | 133 | 44 | 57 | 22 | 31 | 132 | 18 |
| Presence of On-Street Parking | No | | No | No | | No | No | | No | No | | No |
| On-Street Parking Maneuver Rate [/h] | 0 | 0 | 0 | 0 | 0 | 0 | 0 | 0 | 0 | 0 | 0 | 0 |
| Local Bus Stopping Rate [/h] | 0 | 0 | 0 | 0 | 0 | 0 | 0 | 0 | 0 | 0 | 0 | 0 |
| Pedestrian Volume [ped/h] | 0 | | | 0 | | | 0 | | | 0 | | |
| Bicycle Volume [bicycles/h] | 0 | | | 0 | | | 0 | | | 0 | | |

**Intersection Settings**

| | |
|---|---|
| Located in CBD | Yes |
| Signal Coordination Group | - |
| Cycle Length [s] | 90 |
| Coordination Type | Time of Day Pattern Coordinated |
| Actuation Type | Fully actuated |
| Offset [s] | 0.0 |
| Offset Reference | LeadGreen |
| Permissive Mode | SingleBand |
| Lost time [s] | 0.00 |

**Phasing & Timing**

| Control Type | Permiss | Permiss | Permiss | Permiss | Permiss | Permiss | Permiss | Permiss | Permiss | Permiss | Permiss | Permiss |
|---|---|---|---|---|---|---|---|---|---|---|---|---|
| Signal group | 0 | 2 | 0 | 0 | 6 | 0 | 0 | 8 | 0 | 0 | 4 | 0 |
| Auxiliary Signal Groups | | | | | | | | | | | | |
| Lead / Lag | - | - | - | - | - | - | - | - | - | - | - | - |
| Minimum Green [s] | 0 | 5 | 0 | 0 | 5 | 0 | 0 | 5 | 0 | 0 | 5 | 0 |
| Maximum Green [s] | 0 | 30 | 0 | 0 | 30 | 0 | 0 | 30 | 0 | 0 | 30 | 0 |
| Amber [s] | 0.0 | 3.0 | 0.0 | 0.0 | 3.0 | 0.0 | 0.0 | 3.0 | 0.0 | 0.0 | 3.0 | 0.0 |
| All red [s] | 0.0 | 1.0 | 0.0 | 0.0 | 1.0 | 0.0 | 0.0 | 1.0 | 0.0 | 0.0 | 1.0 | 0.0 |
| Split [s] | 0 | 32 | 0 | 0 | 32 | 0 | 0 | 58 | 0 | 0 | 58 | 0 |
| Vehicle Extension [s] | 0.0 | 3.0 | 0.0 | 0.0 | 3.0 | 0.0 | 0.0 | 3.0 | 0.0 | 0.0 | 3.0 | 0.0 |
| Walk [s] | 0 | 5 | 0 | 0 | 5 | 0 | 0 | 5 | 0 | 0 | 5 | 0 |
| Pedestrian Clearance [s] | 0 | 10 | 0 | 0 | 10 | 0 | 0 | 10 | 0 | 0 | 10 | 0 |
| I1, Start-Up Lost Time [s] | 0.0 | 2.0 | 0.0 | 0.0 | 2.0 | 0.0 | 0.0 | 2.0 | 0.0 | 0.0 | 2.0 | 0.0 |
| I2, Clearance Lost Time [s] | 0.0 | 2.0 | 0.0 | 0.0 | 2.0 | 0.0 | 0.0 | 2.0 | 0.0 | 0.0 | 2.0 | 0.0 |
| Minimum Recall | | No | | | No | | | No | | | No | |
| Maximum Recall | | No | | | No | | | No | | | No | |
| Pedestrian Recall | | No | | | No | | | No | | | No | |
| Detector Location [ft] | 0.0 | 0.0 | 0.0 | 0.0 | 0.0 | 0.0 | 0.0 | 0.0 | 0.0 | 0.0 | 0.0 | 0.0 |
| Detector Length [ft] | 0.0 | 0.0 | 0.0 | 0.0 | 0.0 | 0.0 | 0.0 | 0.0 | 0.0 | 0.0 | 0.0 | 0.0 |
| I, Upstream Filtering Factor | 1.00 | 1.00 | 1.00 | 1.00 | 1.00 | 1.00 | 1.00 | 1.00 | 1.00 | 1.00 | 1.00 | 1.00 |

**Exclusive Pedestrian Phase**

| | |
|---|---|
| Pedestrian Signal Group | 0 |
| Pedestrian Walk [s] | 0 |
| Pedestrian Clearance [s] | 0 |

**Lane Group Calculations**

| Lane Group | C | R | C | R | C | C |
|---|---|---|---|---|---|---|
| L, Total Lost Time per Cycle [s] | 4.00 | 4.00 | 4.00 | 4.00 | 4.00 | 4.00 |
| l1_p, Permitted Start-Up Lost Time [s] | 2.00 | 0.00 | 2.00 | 0.00 | 2.00 | 2.00 |
| l2, Clearance Lost Time [s] | 2.00 | 2.00 | 2.00 | 2.00 | 2.00 | 2.00 |
| g_i, Effective Green Time [s] | 71 | 71 | 71 | 71 | 11 | 11 |
| g / C, Green / Cycle | 0.79 | 0.79 | 0.79 | 0.79 | 0.12 | 0.12 |
| (v / s)_i Volume / Saturation Flow Rate | 0.14 | 0.01 | 0.22 | 0.07 | 0.07 | 0.10 |
| s, saturation flow rate [veh/h] | 1700 | 1800 | 1700 | 1800 | 1800 | 1800 |
| c, Capacity [veh/h] | 1382 | 1418 | 1384 | 1418 | 276 | 268 |
| d1, Uniform Delay [s] | 2.36 | 2.05 | 2.58 | 2.18 | 37.08 | 38.41 |
| k, delay calibration | 0.50 | 0.50 | 0.50 | 0.50 | 0.11 | 0.11 |
| I, Upstream Filtering Factor | 1.00 | 1.00 | 1.00 | 1.00 | 1.00 | 1.00 |
| d2, Incremental Delay [s] | 0.28 | 0.02 | 0.48 | 0.13 | 1.13 | 2.95 |
| d3, Initial Queue Delay [s] | 0.00 | 0.00 | 0.00 | 0.00 | 0.00 | 0.00 |
| Rp, platoon ratio | 1.00 | 1.00 | 1.00 | 1.00 | 1.00 | 1.00 |
| PF, progression factor | 1.00 | 1.00 | 1.00 | 1.00 | 1.00 | 1.00 |

**Lane Group Results**

| | | | | | | |
|---|---|---|---|---|---|---|
| X, volume / capacity | 0.18 | 0.02 | 0.27 | 0.09 | 0.45 | 0.67 |
| d, Delay for Lane Group [s/veh] | 2.64 | 2.07 | 3.06 | 2.31 | 38.21 | 41.36 |
| Lane Group LOS | A | A | A | A | D | D |
| Critical Lane Group | No | No | Yes | No | No | Yes |
| 50th-Percentile Queue Length [veh] | 0.67 | 0.06 | 1.11 | 0.33 | 2.57 | 4.09 |
| 50th-Percentile Queue Length [ft] | 16.76 | 1.46 | 27.86 | 8.31 | 64.20 | 102.32 |
| 95th-Percentile Queue Length [veh] | 1.21 | 0.11 | 2.01 | 0.60 | 4.62 | 7.37 |
| 95th-Percentile Queue Length [ft] | 30.18 | 2.63 | 50.15 | 14.96 | 115.56 | 184.18 |

**Movement, Approach, & Intersection Results**

| | | | | | | | | | | | | |
|---|---|---|---|---|---|---|---|---|---|---|---|---|
| d_M, Delay for Movement [s/veh] | 2.64 | 2.64 | 2.07 | 3.06 | 3.06 | 2.31 | 38.21 | 38.21 | 38.21 | 41.36 | 41.36 | 41.36 |
| Movement LOS | A | A | A | A | A | A | D | D | D | D | D | D |
| d_A, Approach Delay [s/veh] | 2.59 | | | 2.86 | | | 38.21 | | | 41.36 | | |
| Approach LOS | A | | | A | | | D | | | D | | |
| d_I, Intersection Delay [s/veh] | 13.27 | | | | | | | | | | | |
| Intersection LOS | B | | | | | | | | | | | |
| Intersection V/C | 0.319 | | | | | | | | | | | |

## Sequence

| | | | | | | | | | | | | | | | | |
|---|---|---|---|---|---|---|---|---|---|---|---|---|---|---|---|---|
| Ring 1 | 2 | 4 | - | - | - | - | - | - | - | - | - | - | - | - | - | - |
| Ring 2 | 6 | 8 | - | - | - | - | - | - | - | - | - | - | - | - | - | - |
| Ring 3 | - | - | - | - | - | - | - | - | - | - | - | - | - | - | - | - |
| Ring 4 | - | - | - | - | - | - | - | - | - | - | - | - | - | - | - | - |

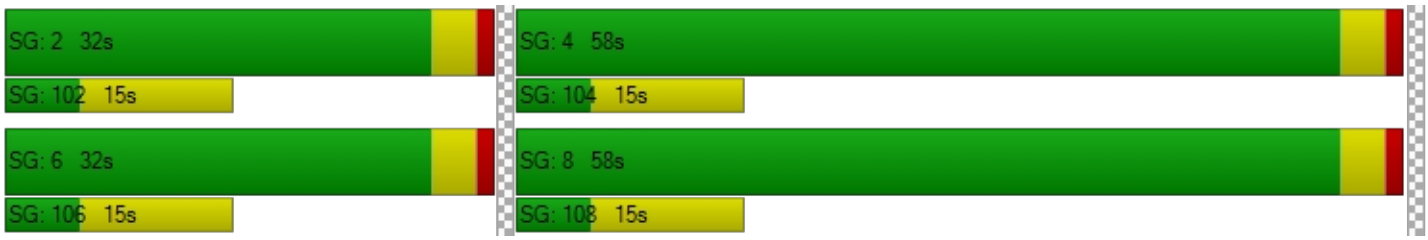

**Intersection Level Of Service Report**
**Intersection 14: Cedar Ave (NS) / I-10 Westbound Ramps (EW)**

| | | | |
|---|---|---|---|
| Control Type: | Signalized | Delay (sec / veh): | 66.7 |
| Analysis Method: | HCM 2010 | Level Of Service: | E |
| Analysis Period: | 15 minutes | Volume to Capacity (v/c): | 1.158 |

**Intersection Setup**

| Name | Cedar Avenue | | | Cedar Avenue | | | | | | I-10 Westbound Ramps | | |
|---|---|---|---|---|---|---|---|---|---|---|---|---|
| Approach | Northbound | | | Southbound | | | Eastbound | | | Westbound | | |
| Lane Configuration | | | | | | | | | | | | |
| Turning Movement | Left | Thru | Right | Left | Thru | Right | Left | Thru | Right | Left | Thru | Right |
| Lane Width [ft] | 12.00 | 12.00 | 12.00 | 12.00 | 12.00 | 12.00 | 12.00 | 12.00 | 12.00 | 12.00 | 12.00 | 12.00 |
| No. of Lanes in Pocket | 1 | 0 | 0 | 0 | 0 | 1 | 0 | 0 | 0 | 0 | 0 | 1 |
| Pocket Length [ft] | 305.00 | 100.00 | 100.00 | 100.00 | 100.00 | 100.00 | 100.00 | 100.00 | 100.00 | 100.00 | 100.00 | 485.00 |
| Speed [mph] | 40.00 | | | 40.00 | | | 30.00 | | | 30.00 | | |
| Grade [%] | 0.00 | | | 0.00 | | | 0.00 | | | 0.00 | | |
| Crosswalk | No | | | No | | | Yes | | | Yes | | |

**volumes**

| Name | Cedar Avenue | | | Cedar Avenue | | | | | | I-10 Westbound Ramps | | |
|---|---|---|---|---|---|---|---|---|---|---|---|---|
| Base Volume Input [veh/h] | 293 | 1096 | 0 | 0 | 1147 | 889 | 0 | 0 | 0 | 239 | 1 | 394 |
| Base Volume Adjustment Factor | 1.0000 | 1.0000 | 1.0000 | 1.0000 | 1.0000 | 1.0000 | 1.0000 | 1.0000 | 1.0000 | 1.0000 | 1.0000 | 1.0000 |
| Heavy Vehicles Percentage [%] | 5.00 | 5.00 | 2.00 | 2.00 | 5.00 | 5.00 | 2.00 | 2.00 | 2.00 | 6.00 | 6.00 | 6.00 |
| Growth Rate | 1.00 | 1.00 | 1.00 | 1.00 | 1.00 | 1.00 | 1.00 | 1.00 | 1.00 | 1.00 | 1.00 | 1.00 |
| In-Process Volume [veh/h] | 0 | 0 | 0 | 0 | 0 | 0 | 0 | 0 | 0 | 0 | 0 | 0 |
| Site-Generated Trips [veh/h] | 0 | 235 | 0 | 0 | 126 | 109 | 8 | 0 | 0 | 0 | 0 | 144 |
| Diverted Trips [veh/h] | 0 | 0 | 0 | 0 | 0 | 0 | 0 | 0 | 0 | 0 | 0 | 0 |
| Pass-by Trips [veh/h] | 0 | 0 | 0 | 0 | 0 | 0 | 0 | 0 | 0 | 0 | 0 | 0 |
| Existing Site Adjustment Volume [veh/h] | 0 | 0 | 0 | 0 | 0 | 0 | 0 | 0 | 0 | 0 | 0 | 0 |
| Other Volume [veh/h] | 0 | 0 | 0 | 0 | 0 | 0 | 0 | 0 | 0 | 0 | 0 | 0 |
| Right-Turn on Red Volume [veh/h] | 0 | 0 | 0 | 0 | 0 | 20 | 0 | 0 | 0 | 0 | 0 | 0 |
| Total Hourly Volume [veh/h] | 293 | 1331 | 0 | 0 | 1273 | 978 | 8 | 0 | 0 | 239 | 1 | 538 |
| Peak Hour Factor | 0.9350 | 0.9350 | 1.0000 | 1.0000 | 0.9350 | 0.9350 | 1.0000 | 1.0000 | 1.0000 | 0.9350 | 0.9350 | 0.9350 |
| Other Adjustment Factor | 1.0000 | 1.0000 | 1.0000 | 1.0000 | 1.0000 | 1.0000 | 1.0000 | 1.0000 | 1.0000 | 1.0000 | 1.0000 | 1.0000 |
| Total 15-Minute Volume [veh/h] | 78 | 356 | 0 | 0 | 340 | 261 | 2 | 0 | 0 | 64 | 0 | 144 |
| Total Analysis Volume [veh/h] | 313 | 1424 | 0 | 0 | 1361 | 1046 | 8 | 0 | 0 | 256 | 1 | 575 |
| Presence of On-Street Parking | No | | No | No | | No | | | | No | | No |
| On-Street Parking Maneuver Rate [/h] | 0 | 0 | 0 | 0 | 0 | 0 | 0 | 0 | 0 | 0 | 0 | 0 |
| Local Bus Stopping Rate [/h] | 0 | 0 | 0 | 0 | 0 | 0 | 0 | 0 | 0 | 0 | 0 | 0 |
| Pedestrian Volume [ped/h] | 0 | | | 0 | | | 0 | | | 0 | | |
| Bicycle Volume [bicycles/h] | 0 | | | 0 | | | 0 | | | 0 | | |

**Intersection Settings**

| | |
|---|---|
| Located in CBD | No |
| Signal Coordination Group | 2 - NS - Cedar |
| Cycle Length [s] | 120 |
| Coordination Type | Time of Day Pattern Coordinated |
| Actuation Type | Fully actuated |
| Offset [s] | 71.0 |
| Offset Reference | LagFO |
| Permissive Mode | SingleBand |
| Lost time [s] | 12.00 |

**Phasing & Timing**

| Control Type | Protecte | Permiss | Permiss | Permiss | Permiss | Permiss | Permiss | Permiss | Permiss | Permiss | Permiss | Permiss |
|---|---|---|---|---|---|---|---|---|---|---|---|---|
| Signal group | 5 | 2 | 0 | 0 | 6 | 0 | 0 | 0 | 0 | 0 | 4 | 0 |
| Auxiliary Signal Groups | | | | | | | | | | | | |
| Lead / Lag | Lead | - | - | - | - | - | - | - | - | - | - | - |
| Minimum Green [s] | 5 | 5 | 0 | 0 | 5 | 0 | 0 | 0 | 0 | 0 | 5 | 0 |
| Maximum Green [s] | 30 | 30 | 0 | 0 | 30 | 0 | 0 | 0 | 0 | 0 | 30 | 0 |
| Amber [s] | 4.4 | 4.4 | 0.0 | 0.0 | 4.4 | 0.0 | 0.0 | 0.0 | 0.0 | 0.0 | 3.7 | 0.0 |
| All red [s] | 1.0 | 1.0 | 0.0 | 0.0 | 1.0 | 0.0 | 0.0 | 0.0 | 0.0 | 0.0 | 1.0 | 0.0 |
| Split [s] | 15 | 87 | 0 | 0 | 72 | 0 | 0 | 0 | 0 | 0 | 33 | 0 |
| Vehicle Extension [s] | 3.0 | 3.0 | 0.0 | 0.0 | 3.0 | 0.0 | 0.0 | 0.0 | 0.0 | 0.0 | 3.0 | 0.0 |
| Walk [s] | 0 | 7 | 0 | 0 | 7 | 0 | 0 | 0 | 0 | 0 | 7 | 0 |
| Pedestrian Clearance [s] | 0 | 17 | 0 | 0 | 17 | 0 | 0 | 0 | 0 | 0 | 10 | 0 |
| I1, Start-Up Lost Time [s] | 2.0 | 2.0 | 0.0 | 0.0 | 2.0 | 0.0 | 0.0 | 0.0 | 0.0 | 0.0 | 2.0 | 0.0 |
| I2, Clearance Lost Time [s] | 3.4 | 3.4 | 0.0 | 0.0 | 3.4 | 0.0 | 0.0 | 0.0 | 0.0 | 0.0 | 2.7 | 0.0 |
| Minimum Recall | No | No | | | No | | | | | | No | |
| Maximum Recall | No | No | | | No | | | | | | No | |
| Pedestrian Recall | No | No | | | No | | | | | | No | |
| Detector Location [ft] | 0.0 | 0.0 | 0.0 | 0.0 | 0.0 | 0.0 | 0.0 | 0.0 | 0.0 | 0.0 | 0.0 | 0.0 |
| Detector Length [ft] | 0.0 | 0.0 | 0.0 | 0.0 | 0.0 | 0.0 | 0.0 | 0.0 | 0.0 | 0.0 | 0.0 | 0.0 |
| I, Upstream Filtering Factor | 1.00 | 1.00 | 1.00 | 1.00 | 1.00 | 1.00 | 1.00 | 1.00 | 1.00 | 1.00 | 1.00 | 1.00 |

**Exclusive Pedestrian Phase**

| | |
|---|---|
| Pedestrian Signal Group | 0 |
| Pedestrian Walk [s] | 0 |
| Pedestrian Clearance [s] | 0 |

**Lane Group Calculations**

| Lane Group | L | C | C | R | | C | R |
|---|---|---|---|---|---|---|---|
| L, Total Lost Time per Cycle [s] | 5.40 | 5.40 | 5.40 | 5.40 | | 4.70 | 4.70 |
| l1_p, Permitted Start-Up Lost Time [s] | 0.00 | 0.00 | 0.00 | 0.00 | | 0.00 | 0.00 |
| l2, Clearance Lost Time [s] | 3.40 | 3.40 | 3.40 | 3.40 | | 2.70 | 2.70 |
| g_i, Effective Green Time [s] | 10 | 82 | 67 | 67 | | 28 | 28 |
| g / C, Green / Cycle | 0.08 | 0.68 | 0.55 | 0.55 | | 0.24 | 0.24 |
| (v / s)_i Volume / Saturation Flow Rate | 0.09 | 0.29 | 0.28 | 0.68 | | 0.26 | 0.27 |
| s, saturation flow rate [veh/h] | 3347 | 4929 | 4929 | 1538 | | 1630 | 1524 |
| c, Capacity [veh/h] | 269 | 3351 | 2733 | 853 | | 385 | 359 |
| d1, Uniform Delay [s] | 55.17 | 8.64 | 16.44 | 26.72 | | 45.83 | 45.83 |
| k, delay calibration | 0.11 | 0.50 | 0.50 | 0.50 | | 0.50 | 0.50 |
| I, Upstream Filtering Factor | 1.00 | 1.00 | 1.00 | 1.00 | | 1.00 | 1.00 |
| d2, Incremental Delay [s] | 82.91 | 0.40 | 0.65 | 112.24 | | 75.98 | 89.99 |
| d3, Initial Queue Delay [s] | 0.00 | 0.00 | 0.00 | 0.00 | | 0.00 | 0.00 |
| Rp, platoon ratio | 1.00 | 1.00 | 1.00 | 1.00 | | 1.00 | 1.00 |
| PF, progression factor | 1.00 | 1.00 | 1.00 | 1.00 | | 1.00 | 1.00 |

**Lane Group Results**

| | | | | | | | |
|---|---|---|---|---|---|---|---|
| X, volume / capacity | 1.16 | 0.42 | 0.50 | 1.23 | | 1.10 | 1.14 |
| d, Delay for Lane Group [s/veh] | 138.07 | 9.04 | 17.10 | 138.96 | | 121.81 | 135.82 |
| Lane Group LOS | F | A | B | F | | F | F |
| Critical Lane Group | Yes | No | No | Yes | | No | Yes |
| 50th-Percentile Queue Length [veh] | 7.09 | 5.02 | 7.37 | 48.61 | | 19.48 | 19.61 |
| 50th-Percentile Queue Length [ft] | 177.27 | 125.38 | 184.32 | 1215.36 | | 487.07 | 490.22 |
| 95th-Percentile Queue Length [veh] | 12.04 | 8.69 | 11.83 | 69.90 | | 28.22 | 28.84 |
| 95th-Percentile Queue Length [ft] | 301.01 | 217.20 | 295.65 | 1747.38 | | 705.42 | 720.97 |

**Movement, Approach, & Intersection Results**

| | | | | | | | | | | | | |
|---|---|---|---|---|---|---|---|---|---|---|---|---|
| d_M, Delay for Movement [s/veh] | 138.07 | 9.04 | 0.00 | 0.00 | 17.10 | 138.96 | 0.00 | 0.00 | 0.00 | 121.81 | 121.81 | 131.85 |
| Movement LOS | F | A | | | B | F | | | | F | F | F |
| d_A, Approach Delay [s/veh] | 32.29 | | | 70.05 | | | 0.00 | | | 128.69 | | |
| Approach LOS | C | | | E | | | A | | | F | | |
| d_I, Intersection Delay [s/veh] | 66.68 | | | | | | | | | | | |
| Intersection LOS | E | | | | | | | | | | | |
| Intersection V/C | 1.158 | | | | | | | | | | | |

## Sequence

| | | | | | | | | | | | | | | | | |
|---|---|---|---|---|---|---|---|---|---|---|---|---|---|---|---|---|
| Ring 1 | - | 2 | 4 | - | - | - | - | - | - | - | - | - | - | - | - | - |
| Ring 2 | 5 | 6 | - | - | - | - | - | - | - | - | - | - | - | - | - | - |
| Ring 3 | - | - | - | - | - | - | - | - | - | - | - | - | - | - | - | - |
| Ring 4 | - | - | - | - | - | - | - | - | - | - | - | - | - | - | - | - |

**Intersection Level Of Service Report**
**Intersection 15: Cedar Ave (NS) / I-10 Eastbound Ramps (EW)**

| | | | |
|---|---|---|---|
| Control Type: | Signalized | Delay (sec / veh): | 35.3 |
| Analysis Method: | HCM 2010 | Level Of Service: | D |
| Analysis Period: | 15 minutes | Volume to Capacity (v/c): | 0.772 |

**Intersection Setup**

| Name | Cedar Avenue | | | Cedar Avenue | | | | | | I-10 Eastbound Ramps | | |
|---|---|---|---|---|---|---|---|---|---|---|---|---|
| Approach | Northbound | | | Southbound | | | Eastbound | | | Westbound | | |
| Lane Configuration | | | | | | | | | | | | |
| Turning Movement | Left | Thru | Right | Left | Thru | Right | Left | Thru | Right | Left | Thru | Right |
| Lane Width [ft] | 12.00 | 12.00 | 12.00 | 12.00 | 12.00 | 12.00 | 12.00 | 12.00 | 12.00 | 12.00 | 12.00 | 12.00 |
| No. of Lanes in Pocket | 0 | 0 | 1 | 1 | 0 | 0 | 1 | 0 | 0 | 0 | 0 | 0 |
| Pocket Length [ft] | 100.00 | 100.00 | 555.00 | 305.00 | 100.00 | 100.00 | 340.00 | 100.00 | 100.00 | 100.00 | 100.00 | 100.00 |
| Speed [mph] | 40.00 | | | 40.00 | | | 30.00 | | | 30.00 | | |
| Grade [%] | 0.00 | | | 0.00 | | | 0.00 | | | 0.00 | | |
| Crosswalk | No | | | No | | | Yes | | | Yes | | |

**volumes**

| Name | Cedar Avenue | | | Cedar Avenue | | | | | | I-10 Eastbound Ramps | | |
|---|---|---|---|---|---|---|---|---|---|---|---|---|
| Base Volume Input [veh/h] | 0 | 928 | 313 | 467 | 924 | 0 | 468 | 2 | 221 | 0 | 0 | 0 |
| Base Volume Adjustment Factor | 1.0000 | 1.0000 | 1.0000 | 1.0000 | 1.0000 | 1.0000 | 1.0000 | 1.0000 | 1.0000 | 1.0000 | 1.0000 | 1.0000 |
| Heavy Vehicles Percentage [%] | 2.00 | 5.00 | 5.00 | 5.00 | 5.00 | 2.00 | 6.00 | 6.00 | 6.00 | 2.00 | 2.00 | 2.00 |
| Growth Rate | 1.00 | 1.00 | 1.00 | 1.00 | 1.00 | 1.00 | 1.00 | 1.00 | 1.00 | 1.00 | 1.00 | 1.00 |
| In-Process Volume [veh/h] | 0 | 0 | 0 | 0 | 0 | 0 | 0 | 0 | 0 | 0 | 0 | 0 |
| Site-Generated Trips [veh/h] | 0 | 51 | 0 | 93 | 33 | 0 | 184 | 0 | 0 | 0 | 0 | 0 |
| Diverted Trips [veh/h] | 0 | 0 | 0 | 0 | 0 | 0 | 0 | 0 | 0 | 0 | 0 | 0 |
| Pass-by Trips [veh/h] | 0 | 0 | 0 | 0 | 0 | 0 | 0 | 0 | 0 | 0 | 0 | 0 |
| Existing Site Adjustment Volume [veh/h] | 0 | 0 | 0 | 0 | 0 | 0 | 0 | 0 | 0 | 0 | 0 | 0 |
| Other Volume [veh/h] | 0 | 0 | 0 | 0 | 0 | 0 | 0 | 0 | 0 | 0 | 0 | 0 |
| Right-Turn on Red Volume [veh/h] | 0 | 0 | 0 | 0 | 0 | 0 | 0 | 0 | 0 | 0 | 0 | 0 |
| Total Hourly Volume [veh/h] | 0 | 979 | 313 | 560 | 957 | 0 | 652 | 2 | 221 | 0 | 0 | 0 |
| Peak Hour Factor | 1.0000 | 0.9240 | 0.9240 | 0.9240 | 0.9240 | 1.0000 | 0.9240 | 0.9240 | 0.9240 | 1.0000 | 1.0000 | 1.0000 |
| Other Adjustment Factor | 1.0000 | 1.0000 | 1.0000 | 1.0000 | 1.0000 | 1.0000 | 1.0000 | 1.0000 | 1.0000 | 1.0000 | 1.0000 | 1.0000 |
| Total 15-Minute Volume [veh/h] | 0 | 265 | 85 | 152 | 259 | 0 | 176 | 1 | 60 | 0 | 0 | 0 |
| Total Analysis Volume [veh/h] | 0 | 1060 | 339 | 606 | 1036 | 0 | 706 | 2 | 239 | 0 | 0 | 0 |
| Presence of On-Street Parking | No | | No | No | | No | No | | No | | | |
| On-Street Parking Maneuver Rate [/h] | 0 | 0 | 0 | 0 | 0 | 0 | 0 | 0 | 0 | 0 | 0 | 0 |
| Local Bus Stopping Rate [/h] | 0 | 0 | 0 | 0 | 0 | 0 | 0 | 0 | 0 | 0 | 0 | 0 |
| Pedestrian Volume [ped/h] | 0 | | | 0 | | | 0 | | | 0 | | |
| Bicycle Volume [bicycles/h] | 0 | | | 0 | | | 0 | | | 0 | | |

**Intersection Settings**

| | |
|---|---|
| Located in CBD | No |
| Signal Coordination Group | 2 - NS - Cedar |
| Cycle Length [s] | 120 |
| Coordination Type | Time of Day Pattern Coordinated |
| Actuation Type | Fully actuated |
| Offset [s] | 65.0 |
| Offset Reference | LagFO |
| Permissive Mode | SingleBand |
| Lost time [s] | 12.00 |

**Phasing & Timing**

| Control Type | Permiss | Permiss | Permiss | Protecte | Permiss | Permiss | Permiss | Permiss | Permiss | Permiss | Permiss | Permiss |
|---|---|---|---|---|---|---|---|---|---|---|---|---|
| Signal group | 0 | 2 | 0 | 1 | 6 | 0 | 0 | 8 | 0 | 0 | 0 | 0 |
| Auxiliary Signal Groups | | | | | | | | | | | | |
| Lead / Lag | - | - | - | Lead | - | - | - | - | - | - | - | - |
| Minimum Green [s] | 0 | 5 | 0 | 5 | 5 | 0 | 0 | 5 | 0 | 0 | 0 | 0 |
| Maximum Green [s] | 0 | 30 | 0 | 30 | 30 | 0 | 0 | 30 | 0 | 0 | 0 | 0 |
| Amber [s] | 0.0 | 4.4 | 0.0 | 4.4 | 4.4 | 0.0 | 0.0 | 3.7 | 0.0 | 0.0 | 0.0 | 0.0 |
| All red [s] | 0.0 | 1.0 | 0.0 | 1.0 | 1.0 | 0.0 | 0.0 | 1.0 | 0.0 | 0.0 | 0.0 | 0.0 |
| Split [s] | 0 | 35 | 0 | 30 | 65 | 0 | 0 | 55 | 0 | 0 | 0 | 0 |
| Vehicle Extension [s] | 0.0 | 3.0 | 0.0 | 3.0 | 3.0 | 0.0 | 0.0 | 3.0 | 0.0 | 0.0 | 0.0 | 0.0 |
| Walk [s] | 0 | 7 | 0 | 0 | 7 | 0 | 0 | 7 | 0 | 0 | 0 | 0 |
| Pedestrian Clearance [s] | 0 | 21 | 0 | 0 | 16 | 0 | 0 | 10 | 0 | 0 | 0 | 0 |
| I1, Start-Up Lost Time [s] | 0.0 | 2.0 | 0.0 | 2.0 | 2.0 | 0.0 | 0.0 | 2.0 | 0.0 | 0.0 | 0.0 | 0.0 |
| I2, Clearance Lost Time [s] | 0.0 | 3.4 | 0.0 | 3.4 | 3.4 | 0.0 | 0.0 | 2.7 | 0.0 | 0.0 | 0.0 | 0.0 |
| Minimum Recall | | No | | No | No | | | No | | | | |
| Maximum Recall | | No | | No | No | | | No | | | | |
| Pedestrian Recall | | No | | No | No | | | No | | | | |
| Detector Location [ft] | 0.0 | 0.0 | 0.0 | 0.0 | 0.0 | 0.0 | 0.0 | 0.0 | 0.0 | 0.0 | 0.0 | 0.0 |
| Detector Length [ft] | 0.0 | 0.0 | 0.0 | 0.0 | 0.0 | 0.0 | 0.0 | 0.0 | 0.0 | 0.0 | 0.0 | 0.0 |
| I, Upstream Filtering Factor | 1.00 | 1.00 | 1.00 | 1.00 | 1.00 | 1.00 | 1.00 | 1.00 | 1.00 | 1.00 | 1.00 | 1.00 |

**Exclusive Pedestrian Phase**

| | |
|---|---|
| Pedestrian Signal Group | 0 |
| Pedestrian Walk [s] | 0 |
| Pedestrian Clearance [s] | 0 |

**Lane Group Calculations**

| Lane Group | C | R | L | C | L | C | |
|---|---|---|---|---|---|---|---|
| L, Total Lost Time per Cycle [s] | 5.40 | 5.40 | 5.40 | 5.40 | 4.70 | 4.70 | |
| l1_p, Permitted Start-Up Lost Time [s] | 0.00 | 0.00 | 0.00 | 0.00 | 0.00 | 0.00 | |
| l2, Clearance Lost Time [s] | 3.40 | 3.40 | 3.40 | 3.40 | 2.70 | 2.70 | |
| g_i, Effective Green Time [s] | 43 | 43 | 24 | 72 | 38 | 38 | |
| g / C, Green / Cycle | 0.36 | 0.36 | 0.20 | 0.60 | 0.32 | 0.32 | |
| (v / s)_i Volume / Saturation Flow Rate | 0.22 | 0.22 | 0.18 | 0.21 | 0.28 | 0.29 | |
| s, saturation flow rate [veh/h] | 4929 | 1538 | 3347 | 4929 | 1707 | 1609 | |
| c, Capacity [veh/h] | 1751 | 546 | 658 | 2942 | 544 | 513 | |
| d1, Uniform Delay [s] | 31.76 | 31.98 | 47.26 | 12.34 | 38.55 | 39.37 | |
| k, delay calibration | 0.50 | 0.50 | 0.11 | 0.50 | 0.21 | 0.24 | |
| I, Upstream Filtering Factor | 1.00 | 1.00 | 1.00 | 1.00 | 1.00 | 1.00 | |
| d2, Incremental Delay [s] | 1.56 | 5.23 | 5.88 | 0.33 | 8.31 | 13.76 | |
| d3, Initial Queue Delay [s] | 0.00 | 0.00 | 0.00 | 0.00 | 0.00 | 0.00 | |
| Rp, platoon ratio | 1.00 | 1.00 | 1.00 | 1.00 | 1.00 | 1.00 | |
| PF, progression factor | 1.00 | 1.00 | 1.00 | 1.00 | 1.00 | 1.00 | |

**Lane Group Results**

| | | | | | | | |
|---|---|---|---|---|---|---|---|
| X, volume / capacity | 0.61 | 0.62 | 0.92 | 0.35 | 0.87 | 0.92 | |
| d, Delay for Lane Group [s/veh] | 33.33 | 37.21 | 53.14 | 12.67 | 46.86 | 53.13 | |
| Lane Group LOS | C | D | D | B | D | D | |
| Critical Lane Group | No | Yes | Yes | No | No | Yes | |
| 50th-Percentile Queue Length [veh] | 8.43 | 8.69 | 9.21 | 4.51 | 14.30 | 15.19 | |
| 50th-Percentile Queue Length [ft] | 210.66 | 217.21 | 230.18 | 112.66 | 357.38 | 379.73 | |
| 95th-Percentile Queue Length [veh] | 13.19 | 13.52 | 14.18 | 7.99 | 20.50 | 21.58 | |
| 95th-Percentile Queue Length [ft] | 329.68 | 338.06 | 354.59 | 199.70 | 512.40 | 539.52 | |

**Movement, Approach, & Intersection Results**

| | | | | | | | | | | | | |
|---|---|---|---|---|---|---|---|---|---|---|---|---|
| d_M, Delay for Movement [s/veh] | 0.00 | 33.33 | 37.21 | 53.14 | 12.67 | 0.00 | 48.91 | 53.13 | 53.13 | 0.00 | 0.00 | 0.00 |
| Movement LOS | | C | D | D | B | | D | D | D | | | |
| d_A, Approach Delay [s/veh] | 34.27 | | | 27.61 | | | 49.98 | | | 0.00 | | |
| Approach LOS | C | | | C | | | D | | | A | | |
| d_I, Intersection Delay [s/veh] | 35.26 | | | | | | | | | | | |
| Intersection LOS | D | | | | | | | | | | | |
| Intersection V/C | 0.772 | | | | | | | | | | | |

## Sequence

| | | | | | | | | | | | | | | | | |
|---|---|---|---|---|---|---|---|---|---|---|---|---|---|---|---|---|
| Ring 1 | 1 | 2 | - | - | - | - | - | - | - | - | - | - | - | - | - | - |
| Ring 2 | - | 6 | 8 | - | - | - | - | - | - | - | - | - | - | - | - | - |
| Ring 3 | - | - | - | - | - | - | - | - | - | - | - | - | - | - | - | - |
| Ring 4 | - | - | - | - | - | - | - | - | - | - | - | - | - | - | - | - |

**Intersection Level Of Service Report**
**Intersection 1: Sierra Ave (NS) / San Bernardino Ave (EW)**

| | | | |
|---|---|---|---|
| Control Type: | Signalized | Delay (sec / veh): | 35.4 |
| Analysis Method: | HCM 2010 | Level Of Service: | D |
| Analysis Period: | 15 minutes | Volume to Capacity (v/c): | 0.739 |

**Intersection Setup**

| Name | Sierra Avenue | | | Sierra Avenue | | | San Bernardino Avenue | | | San Bernardino Avenue | | |
|---|---|---|---|---|---|---|---|---|---|---|---|---|
| Approach | Northbound | | | Southbound | | | Eastbound | | | Westbound | | |
| Lane Configuration | | | | | | | | | | | | |
| Turning Movement | Left | Thru | Right | Left | Thru | Right | Left | Thru | Right | Left | Thru | Right |
| Lane Width [ft] | 12.00 | 12.00 | 12.00 | 12.00 | 12.00 | 12.00 | 12.00 | 12.00 | 12.00 | 12.00 | 12.00 | 12.00 |
| No. of Lanes in Pocket | 1 | 0 | 1 | 1 | 0 | 0 | 1 | 0 | 0 | 1 | 0 | 0 |
| Pocket Length [ft] | 140.00 | 100.00 | 140.00 | 150.00 | 100.00 | 100.00 | 150.00 | 100.00 | 100.00 | 240.00 | 100.00 | 100.00 |
| Speed [mph] | 35.00 | | | 35.00 | | | 35.00 | | | 30.00 | | |
| Grade [%] | 0.00 | | | 0.00 | | | 0.00 | | | 0.00 | | |
| Crosswalk | Yes | | | Yes | | | Yes | | | Yes | | |

**volumes**

| Name | Sierra Avenue | | | Sierra Avenue | | | San Bernardino Avenue | | | San Bernardino Avenue | | |
|---|---|---|---|---|---|---|---|---|---|---|---|---|
| Base Volume Input [veh/h] | 228 | 1051 | 251 | 46 | 871 | 51 | 72 | 243 | 145 | 192 | 174 | 37 |
| Base Volume Adjustment Factor | 1.0000 | 1.0000 | 1.0000 | 1.0000 | 1.0000 | 1.0000 | 1.0000 | 1.0000 | 1.0000 | 1.0000 | 1.0000 | 1.0000 |
| Heavy Vehicles Percentage [%] | 2.00 | 2.00 | 2.00 | 2.00 | 2.00 | 2.00 | 2.00 | 2.00 | 2.00 | 2.00 | 2.00 | 2.00 |
| Growth Rate | 1.00 | 1.00 | 1.00 | 1.00 | 1.00 | 1.00 | 1.00 | 1.00 | 1.00 | 1.00 | 1.00 | 1.00 |
| In-Process Volume [veh/h] | 0 | 0 | 0 | 0 | 0 | 0 | 0 | 0 | 0 | 0 | 0 | 0 |
| Site-Generated Trips [veh/h] | 16 | 16 | 0 | 0 | 11 | 0 | 0 | 0 | 11 | 0 | 0 | 0 |
| Diverted Trips [veh/h] | 0 | 0 | 0 | 0 | 0 | 0 | 0 | 0 | 0 | 0 | 0 | 0 |
| Pass-by Trips [veh/h] | 0 | 0 | 0 | 0 | 0 | 0 | 0 | 0 | 0 | 0 | 0 | 0 |
| Existing Site Adjustment Volume [veh/h] | 0 | 0 | 0 | 0 | 0 | 0 | 0 | 0 | 0 | 0 | 0 | 0 |
| Other Volume [veh/h] | 0 | 0 | 0 | 0 | 0 | 0 | 0 | 0 | 0 | 0 | 0 | 0 |
| Right-Turn on Red Volume [veh/h] | 0 | 0 | 0 | 0 | 0 | 0 | 0 | 0 | 0 | 0 | 0 | 0 |
| Total Hourly Volume [veh/h] | 244 | 1067 | 251 | 46 | 882 | 51 | 72 | 243 | 156 | 192 | 174 | 37 |
| Peak Hour Factor | 0.9020 | 0.9020 | 0.9020 | 0.9020 | 0.9200 | 0.9020 | 0.9020 | 0.9020 | 0.9020 | 0.9020 | 0.9020 | 0.9020 |
| Other Adjustment Factor | 1.0000 | 1.0000 | 1.0000 | 1.0000 | 1.0000 | 1.0000 | 1.0000 | 1.0000 | 1.0000 | 1.0000 | 1.0000 | 1.0000 |
| Total 15-Minute Volume [veh/h] | 68 | 296 | 70 | 13 | 240 | 14 | 20 | 67 | 43 | 53 | 48 | 10 |
| Total Analysis Volume [veh/h] | 271 | 1183 | 278 | 51 | 959 | 57 | 80 | 269 | 173 | 213 | 193 | 41 |
| Presence of On-Street Parking | No | | No | No | | No | No | | No | No | | No |
| On-Street Parking Maneuver Rate [/h] | 0 | 0 | 0 | 0 | 0 | 0 | 0 | 0 | 0 | 0 | 0 | 0 |
| Local Bus Stopping Rate [/h] | 0 | 0 | 0 | 0 | 0 | 0 | 0 | 0 | 0 | 0 | 0 | 0 |
| Pedestrian Volume [ped/h] | 0 | | | 0 | | | 0 | | | 0 | | |
| Bicycle Volume [bicycles/h] | 0 | | | 0 | | | 0 | | | 0 | | |

**Intersection Settings**

| | |
|---|---|
| Located in CBD | No |
| Signal Coordination Group | 1 - NS - Sierra |
| Cycle Length [s] | 120 |
| Coordination Type | Time of Day Pattern Coordinated |
| Actuation Type | Fully actuated |
| Offset [s] | 0.0 |
| Offset Reference | LagFO |
| Permissive Mode | SingleBand |
| Lost time [s] | 16.00 |

**Phasing & Timing**

| Control Type | Protecte | Permiss | Permiss | Protecte | Permiss | Permiss | Protecte | Permiss | Overlap | Protecte | Permiss | Permiss |
|---|---|---|---|---|---|---|---|---|---|---|---|---|
| Signal group | 5 | 2 | 0 | 1 | 6 | 0 | 3 | 8 | 8 | 7 | 4 | 0 |
| Auxiliary Signal Groups | | | | | | | | | 5,8 | | | |
| Lead / Lag | Lead | - | - | Lead | - | - | Lead | - | - | Lead | - | - |
| Minimum Green [s] | 5 | 5 | 0 | 5 | 5 | 0 | 5 | 5 | 5 | 5 | 5 | 0 |
| Maximum Green [s] | 30 | 30 | 0 | 30 | 30 | 0 | 30 | 30 | 30 | 30 | 30 | 0 |
| Amber [s] | 4.1 | 4.1 | 0.0 | 4.1 | 4.1 | 0.0 | 4.1 | 4.1 | 4.1 | 3.7 | 3.7 | 0.0 |
| All red [s] | 1.0 | 1.0 | 0.0 | 1.0 | 1.0 | 0.0 | 1.0 | 1.0 | 1.0 | 1.0 | 1.0 | 0.0 |
| Split [s] | 22 | 50 | 0 | 11 | 39 | 0 | 18 | 41 | 41 | 18 | 41 | 0 |
| Vehicle Extension [s] | 3.0 | 3.0 | 0.0 | 3.0 | 3.0 | 0.0 | 3.0 | 3.0 | 3.0 | 3.0 | 3.0 | 0.0 |
| Walk [s] | 0 | 7 | 0 | 0 | 7 | 0 | 0 | 7 | 7 | 0 | 7 | 0 |
| Pedestrian Clearance [s] | 0 | 22 | 0 | 0 | 23 | 0 | 0 | 28 | 28 | 0 | 25 | 0 |
| I1, Start-Up Lost Time [s] | 2.0 | 2.0 | 0.0 | 2.0 | 2.0 | 0.0 | 2.0 | 2.0 | 2.0 | 2.0 | 2.0 | 0.0 |
| I2, Clearance Lost Time [s] | 3.1 | 3.1 | 0.0 | 3.1 | 3.1 | 0.0 | 3.1 | 3.1 | 3.1 | 2.7 | 2.7 | 0.0 |
| Minimum Recall | No | No | | No | No | | No | No | No | No | No | |
| Maximum Recall | No | No | | No | No | | No | No | No | No | No | |
| Pedestrian Recall | No | No | | No | No | | No | No | No | No | No | |
| Detector Location [ft] | 0.0 | 0.0 | 0.0 | 0.0 | 0.0 | 0.0 | 0.0 | 0.0 | 0.0 | 0.0 | 0.0 | 0.0 |
| Detector Length [ft] | 0.0 | 0.0 | 0.0 | 0.0 | 0.0 | 0.0 | 0.0 | 0.0 | 0.0 | 0.0 | 0.0 | 0.0 |
| I, Upstream Filtering Factor | 1.00 | 1.00 | 1.00 | 1.00 | 1.00 | 1.00 | 1.00 | 1.00 | 1.00 | 1.00 | 1.00 | 1.00 |

**Exclusive Pedestrian Phase**

| | |
|---|---|
| Pedestrian Signal Group | 0 |
| Pedestrian Walk [s] | 0 |
| Pedestrian Clearance [s] | 0 |

**Lane Group Calculations**

| Lane Group | L | C | R | L | C | C | L | C | R | L | C | C |
|---|---|---|---|---|---|---|---|---|---|---|---|---|
| L, Total Lost Time per Cycle [s] | 5.10 | 5.10 | 5.10 | 5.10 | 5.10 | 5.10 | 5.10 | 5.10 | 5.10 | 4.70 | 4.70 | 4.70 |
| l1_p, Permitted Start-Up Lost Time [s] | 0.00 | 0.00 | 0.00 | 0.00 | 0.00 | 0.00 | 0.00 | 0.00 | 0.00 | 0.00 | 0.00 | 0.00 |
| l2, Clearance Lost Time [s] | 3.10 | 3.10 | 3.10 | 3.10 | 3.10 | 3.10 | 3.10 | 3.10 | 0.00 | 2.70 | 2.70 | 2.70 |
| g_i, Effective Green Time [s] | 17 | 70 | 70 | 4 | 58 | 58 | 7 | 12 | 34 | 13 | 18 | 18 |
| g / C, Green / Cycle | 0.14 | 0.59 | 0.59 | 0.04 | 0.48 | 0.48 | 0.06 | 0.10 | 0.28 | 0.11 | 0.15 | 0.15 |
| (v / s)_i Volume / Saturation Flow Rate | 0.15 | 0.33 | 0.18 | 0.03 | 0.28 | 0.28 | 0.05 | 0.08 | 0.11 | 0.12 | 0.06 | 0.07 |
| s, saturation flow rate [veh/h] | 1774 | 3547 | 1583 | 1774 | 1863 | 1826 | 1774 | 3547 | 1583 | 1774 | 1863 | 1752 |
| c, Capacity [veh/h] | 250 | 2075 | 926 | 67 | 897 | 880 | 103 | 352 | 448 | 197 | 284 | 267 |
| d1, Uniform Delay [s] | 48.74 | 7.22 | 6.14 | 56.50 | 14.48 | 14.48 | 55.79 | 52.70 | 34.65 | 53.36 | 46.07 | 46.13 |
| k, delay calibration | 0.44 | 0.50 | 0.50 | 0.11 | 0.50 | 0.50 | 0.11 | 0.11 | 0.23 | 0.42 | 0.11 | 0.11 |
| I, Upstream Filtering Factor | 1.00 | 1.00 | 1.00 | 1.00 | 1.00 | 1.00 | 1.00 | 1.00 | 1.00 | 1.00 | 1.00 | 1.00 |
| d2, Incremental Delay [s] | 76.67 | 1.14 | 0.83 | 16.28 | 2.64 | 2.70 | 11.76 | 3.45 | 1.16 | 81.37 | 0.99 | 1.08 |
| d3, Initial Queue Delay [s] | 0.00 | 0.00 | 0.00 | 0.00 | 0.00 | 0.00 | 0.00 | 0.00 | 0.00 | 0.00 | 0.00 | 0.00 |
| Rp, platoon ratio | 1.33 | 1.33 | 1.33 | 1.33 | 1.33 | 1.33 | 1.00 | 1.00 | 1.00 | 1.00 | 1.00 | 1.00 |
| PF, progression factor | 1.00 | 1.00 | 1.00 | 1.00 | 1.00 | 1.00 | 1.00 | 1.00 | 1.00 | 1.00 | 1.00 | 1.00 |

**Lane Group Results**

| | | | | | | | | | | | | |
|---|---|---|---|---|---|---|---|---|---|---|---|---|
| X, volume / capacity | 1.08 | 0.57 | 0.30 | 0.76 | 0.57 | 0.57 | 0.78 | 0.76 | 0.39 | 1.08 | 0.42 | 0.43 |
| d, Delay for Lane Group [s/veh] | 125.41 | 8.36 | 6.97 | 72.78 | 17.13 | 17.18 | 67.54 | 56.15 | 35.81 | 134.72 | 47.06 | 47.21 |
| Lane Group LOS | F | A | A | E | B | B | E | E | D | F | D | D |
| Critical Lane Group | Yes | No | No | No | No | Yes | No | No | Yes | Yes | No | No |
| 50th-Percentile Queue Length [veh] | 12.41 | 4.39 | 1.95 | 1.80 | 6.95 | 6.83 | 2.71 | 4.09 | 4.19 | 10.41 | 3.32 | 3.19 |
| 50th-Percentile Queue Length [ft] | 310.17 | 109.66 | 48.63 | 45.11 | 173.68 | 170.65 | 67.70 | 102.20 | 104.65 | 260.20 | 83.00 | 79.69 |
| 95th-Percentile Queue Length [veh] | 18.85 | 7.82 | 3.50 | 3.25 | 11.27 | 11.11 | 4.87 | 7.36 | 7.54 | 16.19 | 5.98 | 5.74 |
| 95th-Percentile Queue Length [ft] | 471.21 | 195.53 | 87.53 | 81.19 | 281.75 | 277.77 | 121.86 | 183.96 | 188.38 | 404.87 | 149.41 | 143.44 |

**Movement, Approach, & Intersection Results**

| | | | | | | | | | | | | |
|---|---|---|---|---|---|---|---|---|---|---|---|---|
| d_M, Delay for Movement [s/veh] | 125.41 | 8.36 | 6.97 | 72.78 | 17.15 | 17.18 | 67.54 | 56.15 | 35.81 | 134.72 | 47.12 | 47.21 |
| Movement LOS | F | A | A | E | B | B | E | E | D | F | D | D |
| d_A, Approach Delay [s/veh] | 26.45 | | | 19.81 | | | 51.15 | | | 88.87 | | |
| Approach LOS | C | | | B | | | D | | | F | | |
| d_I, Intersection Delay [s/veh] | 35.40 | | | | | | | | | | | |
| Intersection LOS | D | | | | | | | | | | | |
| Intersection V/C | 0.739 | | | | | | | | | | | |

## Sequence

| | | | | | | | | | | | | | | | | |
|---|---|---|---|---|---|---|---|---|---|---|---|---|---|---|---|---|
| Ring 1 | 1 | 2 | 3 | 4 | - | - | - | - | - | - | - | - | - | - | - | - |
| Ring 2 | 5 | 6 | 7 | 8 | - | - | - | - | - | - | - | - | - | - | - | - |
| Ring 3 | - | - | - | - | - | - | - | - | - | - | - | - | - | - | - | - |
| Ring 4 | - | - | - | - | - | - | - | - | - | - | - | - | - | - | - | - |

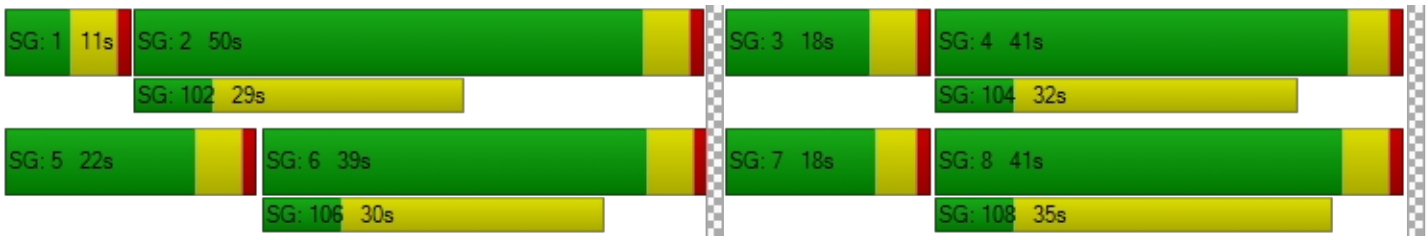

**Intersection Level Of Service Report**
**Intersection 2: Sierra Ave (NS) / Valley Blvd (EW)**

| | | | |
|---|---|---|---|
| Control Type: | Signalized | Delay (sec / veh): | 36.4 |
| Analysis Method: | HCM 2010 | Level Of Service: | D |
| Analysis Period: | 15 minutes | Volume to Capacity (v/c): | 1.008 |

**Intersection Setup**

| Name | Sierra Avenue | | | Sierra Avenue | | | Valley Boulevard | | | Valley Boulevard | | |
|---|---|---|---|---|---|---|---|---|---|---|---|---|
| Approach | Northbound | | | Southbound | | | Eastbound | | | Westbound | | |
| Lane Configuration | | | | | | | | | | | | |
| Turning Movement | Left | Thru | Right | Left | Thru | Right | Left | Thru | Right | Left | Thru | Right |
| Lane Width [ft] | 12.00 | 12.00 | 12.00 | 12.00 | 12.00 | 12.00 | 12.00 | 12.00 | 12.00 | 12.00 | 12.00 | 12.00 |
| No. of Lanes in Pocket | 2 | 0 | 0 | 2 | 0 | 0 | 2 | 0 | 0 | 2 | 0 | 0 |
| Pocket Length [ft] | 370.00 | 100.00 | 100.00 | 165.00 | 100.00 | 100.00 | 260.00 | 100.00 | 100.00 | 355.00 | 100.00 | 100.00 |
| Speed [mph] | 35.00 | | | 35.00 | | | 40.00 | | | 40.00 | | |
| Grade [%] | 0.00 | | | 0.00 | | | 0.00 | | | 0.00 | | |
| Crosswalk | Yes | | | Yes | | | Yes | | | Yes | | |

**volumes**

| Name | Sierra Avenue | | | Sierra Avenue | | | Valley Boulevard | | | Valley Boulevard | | |
|---|---|---|---|---|---|---|---|---|---|---|---|---|
| Base Volume Input [veh/h] | 315 | 1188 | 907 | 188 | 1325 | 172 | 194 | 486 | 330 | 675 | 492 | 260 |
| Base Volume Adjustment Factor | 1.0000 | 1.0000 | 1.0000 | 1.0000 | 1.0000 | 1.0000 | 1.0000 | 1.0000 | 1.0000 | 1.0000 | 1.0000 | 1.0000 |
| Heavy Vehicles Percentage [%] | 2.00 | 2.00 | 2.00 | 2.00 | 2.00 | 2.00 | 4.00 | 4.00 | 4.00 | 4.00 | 4.00 | 4.00 |
| Growth Rate | 1.00 | 1.00 | 1.00 | 1.00 | 1.00 | 1.00 | 1.00 | 1.00 | 1.00 | 1.00 | 1.00 | 1.00 |
| In-Process Volume [veh/h] | 0 | 0 | 0 | 0 | 0 | 0 | 0 | 0 | 0 | 0 | 0 | 0 |
| Site-Generated Trips [veh/h] | 0 | 0 | 32 | 31 | 0 | 0 | 0 | 4 | 0 | 40 | 3 | 46 |
| Diverted Trips [veh/h] | 0 | 0 | 0 | 0 | 0 | 0 | 0 | 0 | 0 | 0 | 0 | 0 |
| Pass-by Trips [veh/h] | 0 | 0 | 0 | 0 | 0 | 0 | 0 | 0 | 0 | 0 | 0 | 0 |
| Existing Site Adjustment Volume [veh/h] | 0 | 0 | 0 | 0 | 0 | 0 | 0 | 0 | 0 | 0 | 0 | 0 |
| Other Volume [veh/h] | 0 | 0 | 0 | 0 | 0 | 0 | 0 | 0 | 0 | 0 | 0 | 0 |
| Right-Turn on Red Volume [veh/h] | 0 | 0 | 0 | 0 | 0 | 0 | 0 | 0 | 0 | 0 | 0 | 0 |
| Total Hourly Volume [veh/h] | 315 | 1188 | 939 | 219 | 1325 | 172 | 194 | 490 | 330 | 715 | 495 | 306 |
| Peak Hour Factor | 0.9720 | 0.9720 | 0.9720 | 0.9720 | 0.9720 | 0.9720 | 0.9720 | 0.9720 | 0.9720 | 0.9720 | 0.9720 | 0.9720 |
| Other Adjustment Factor | 1.0000 | 1.0000 | 1.0000 | 1.0000 | 1.0000 | 1.0000 | 1.0000 | 1.0000 | 1.0000 | 1.0000 | 1.0000 | 1.0000 |
| Total 15-Minute Volume [veh/h] | 81 | 306 | 242 | 56 | 341 | 44 | 50 | 126 | 85 | 184 | 127 | 79 |
| Total Analysis Volume [veh/h] | 324 | 1222 | 966 | 225 | 1363 | 177 | 200 | 504 | 340 | 736 | 509 | 315 |
| Presence of On-Street Parking | No | | No | No | | No | No | | No | No | | No |
| On-Street Parking Maneuver Rate [/h] | 0 | 0 | 0 | 0 | 0 | 0 | 0 | 0 | 0 | 0 | 0 | 0 |
| Local Bus Stopping Rate [/h] | 0 | 0 | 0 | 0 | 0 | 0 | 0 | 0 | 0 | 0 | 0 | 0 |
| Pedestrian Volume [ped/h] | 0 | | | 0 | | | 0 | | | 0 | | |
| Bicycle Volume [bicycles/h] | 0 | | | 0 | | | 0 | | | 0 | | |

**Intersection Settings**

| | |
|---|---|
| Located in CBD | No |
| Signal Coordination Group | 1 - NS - Sierra |
| Cycle Length [s] | 120 |
| Coordination Type | Time of Day Pattern Coordinated |
| Actuation Type | Fully actuated |
| Offset [s] | 69.0 |
| Offset Reference | LagFO |
| Permissive Mode | SingleBand |
| Lost time [s] | 16.00 |

**Phasing & Timing**

| Control Type | Protecte | Permiss | Overlap | Protecte | Permiss | Overlap | Protecte | Permiss | Overlap | Protecte | Permiss | Overlap |
|---|---|---|---|---|---|---|---|---|---|---|---|---|
| Signal group | 5 | 2 | 2 | 1 | 6 | 6 | 3 | 8 | 8 | 7 | 4 | 4 |
| Auxiliary Signal Groups | | | 2,7 | | | 3,6 | | | 5,8 | | | 1,4 |
| Lead / Lag | Lead | - | - | Lead | - | - | Lead | - | - | Lead | - | - |
| Minimum Green [s] | 5 | 5 | 5 | 5 | 5 | 5 | 5 | 5 | 5 | 5 | 5 | 5 |
| Maximum Green [s] | 30 | 30 | 30 | 30 | 30 | 30 | 30 | 30 | 30 | 30 | 30 | 30 |
| Amber [s] | 4.1 | 4.1 | 4.1 | 4.1 | 4.1 | 4.1 | 4.4 | 4.4 | 4.4 | 4.4 | 4.4 | 4.4 |
| All red [s] | 1.0 | 1.0 | 1.0 | 1.0 | 1.0 | 1.0 | 1.0 | 1.0 | 1.0 | 1.0 | 1.0 | 1.0 |
| Split [s] | 18 | 53 | 53 | 13 | 48 | 48 | 15 | 22 | 22 | 32 | 39 | 39 |
| Vehicle Extension [s] | 3.0 | 3.0 | 3.0 | 3.0 | 3.0 | 3.0 | 3.0 | 3.0 | 3.0 | 3.0 | 3.0 | 3.0 |
| Walk [s] | 0 | 7 | 7 | 0 | 7 | 7 | 0 | 5 | 5 | 0 | 5 | 5 |
| Pedestrian Clearance [s] | 0 | 24 | 24 | 0 | 26 | 26 | 0 | 10 | 10 | 0 | 10 | 10 |
| I1, Start-Up Lost Time [s] | 2.0 | 2.0 | 2.0 | 2.0 | 2.0 | 2.0 | 2.0 | 2.0 | 2.0 | 2.0 | 2.0 | 2.0 |
| I2, Clearance Lost Time [s] | 3.1 | 3.1 | 3.1 | 3.1 | 3.1 | 3.1 | 3.4 | 3.4 | 3.4 | 3.4 | 3.4 | 3.4 |
| Minimum Recall | No | No | No | No | No | No | No | No | No | No | No | No |
| Maximum Recall | No | No | No | No | No | No | No | No | No | No | No | No |
| Pedestrian Recall | No | No | No | No | No | No | No | No | No | No | No | No |
| Detector Location [ft] | 0.0 | 0.0 | 0.0 | 0.0 | 0.0 | 0.0 | 0.0 | 0.0 | 0.0 | 0.0 | 0.0 | 0.0 |
| Detector Length [ft] | 0.0 | 0.0 | 0.0 | 0.0 | 0.0 | 0.0 | 0.0 | 0.0 | 0.0 | 0.0 | 0.0 | 0.0 |
| I, Upstream Filtering Factor | 1.00 | 1.00 | 1.00 | 1.00 | 1.00 | 1.00 | 1.00 | 1.00 | 1.00 | 1.00 | 1.00 | 1.00 |

**Exclusive Pedestrian Phase**

| | |
|---|---|
| Pedestrian Signal Group | 0 |
| Pedestrian Walk [s] | 0 |
| Pedestrian Clearance [s] | 0 |

**Lane Group Calculations**

| Lane Group | L | C | R | L | C | R | L | C | R | L | C | R |
|---|---|---|---|---|---|---|---|---|---|---|---|---|
| L, Total Lost Time per Cycle [s] | 5.10 | 5.10 | 5.40 | 5.10 | 5.10 | 5.40 | 5.40 | 5.40 | 5.10 | 5.40 | 5.40 | 5.10 |
| l1_p, Permitted Start-Up Lost Time [s] | 0.00 | 0.00 | 0.00 | 0.00 | 0.00 | 0.00 | 0.00 | 0.00 | 0.00 | 0.00 | 0.00 | 0.00 |
| l2, Clearance Lost Time [s] | 3.10 | 3.10 | 0.00 | 3.10 | 3.10 | 0.00 | 3.40 | 3.40 | 0.00 | 3.40 | 3.40 | 0.00 |
| g_i, Effective Green Time [s] | 13 | 48 | 80 | 8 | 43 | 57 | 9 | 17 | 35 | 27 | 34 | 48 |
| g / C, Green / Cycle | 0.11 | 0.40 | 0.66 | 0.07 | 0.36 | 0.47 | 0.07 | 0.14 | 0.29 | 0.22 | 0.29 | 0.40 |
| (v / s)_i Volume / Saturation Flow Rate | 0.09 | 0.33 | 0.61 | 0.06 | 0.24 | 0.11 | 0.06 | 0.14 | 0.22 | 0.21 | 0.14 | 0.20 |
| s, saturation flow rate [veh/h] | 3548 | 3725 | 1583 | 3548 | 5588 | 1583 | 3480 | 3654 | 1553 | 3480 | 3654 | 1553 |
| c, Capacity [veh/h] | 385 | 1486 | 1050 | 238 | 1999 | 752 | 260 | 502 | 452 | 771 | 1039 | 616 |
| d1, Uniform Delay [s] | 50.39 | 24.57 | 4.99 | 54.48 | 26.12 | 12.64 | 53.09 | 49.07 | 33.04 | 41.74 | 30.66 | 20.81 |
| k, delay calibration | 0.11 | 0.50 | 0.50 | 0.11 | 0.50 | 0.50 | 0.11 | 0.11 | 0.50 | 0.11 | 0.11 | 0.50 |
| I, Upstream Filtering Factor | 1.00 | 1.00 | 1.00 | 1.00 | 1.00 | 1.00 | 1.00 | 1.00 | 1.00 | 1.00 | 1.00 | 1.00 |
| d2, Incremental Delay [s] | 5.03 | 5.25 | 14.17 | 16.58 | 1.90 | 0.74 | 4.77 | 19.48 | 11.04 | 7.69 | 0.36 | 3.02 |
| d3, Initial Queue Delay [s] | 0.00 | 0.00 | 0.00 | 0.00 | 0.00 | 0.00 | 0.00 | 0.00 | 0.00 | 0.00 | 0.00 | 0.00 |
| Rp, platoon ratio | 1.33 | 1.33 | 1.33 | 1.33 | 1.33 | 1.33 | 1.33 | 1.33 | 1.33 | 1.33 | 1.33 | 1.33 |
| PF, progression factor | 1.00 | 1.00 | 1.00 | 1.00 | 1.00 | 1.00 | 1.00 | 1.00 | 1.00 | 1.00 | 1.00 | 1.00 |

**Lane Group Results**

| | | | | | | | | | | | | |
|---|---|---|---|---|---|---|---|---|---|---|---|---|
| X, volume / capacity | 0.84 | 0.82 | 0.92 | 0.94 | 0.68 | 0.24 | 0.77 | 1.00 | 0.75 | 0.95 | 0.49 | 0.51 |
| d, Delay for Lane Group [s/veh] | 55.42 | 29.82 | 19.16 | 71.05 | 28.03 | 13.37 | 57.86 | 68.55 | 44.08 | 49.43 | 31.02 | 23.83 |
| Lane Group LOS | E | C | B | E | C | B | E | F | D | D | C | C |
| Critical Lane Group | No | No | Yes | Yes | No | No | No | No | Yes | Yes | No | No |
| 50th-Percentile Queue Length [veh] | 4.81 | 13.52 | 7.54 | 3.83 | 9.31 | 2.09 | 3.01 | 8.36 | 9.06 | 10.59 | 5.20 | 5.42 |
| 50th-Percentile Queue Length [ft] | 120.21 | 338.06 | 188.50 | 95.75 | 232.66 | 52.25 | 75.30 | 209.08 | 226.39 | 264.68 | 129.92 | 135.53 |
| 95th-Percentile Queue Length [veh] | 8.40 | 19.55 | 12.04 | 6.89 | 14.31 | 3.76 | 5.42 | 13.13 | 13.99 | 15.92 | 8.94 | 9.24 |
| 95th-Percentile Queue Length [ft] | 210.12 | 488.83 | 301.09 | 172.36 | 357.74 | 94.06 | 135.55 | 328.15 | 349.77 | 398.08 | 223.38 | 230.99 |

**Movement, Approach, & Intersection Results**

| | | | | | | | | | | | | |
|---|---|---|---|---|---|---|---|---|---|---|---|---|
| d_M, Delay for Movement [s/veh] | 55.42 | 29.82 | 19.16 | 71.05 | 28.03 | 13.37 | 57.86 | 68.55 | 44.08 | 49.43 | 31.02 | 23.83 |
| Movement LOS | E | C | B | E | C | B | E | F | D | D | C | C |
| d_A, Approach Delay [s/veh] | 29.02 | | | 32.04 | | | 58.53 | | | 38.25 | | |
| Approach LOS | C | | | C | | | E | | | D | | |
| d_I, Intersection Delay [s/veh] | 36.37 | | | | | | | | | | | |
| Intersection LOS | D | | | | | | | | | | | |
| Intersection V/C | 1.008 | | | | | | | | | | | |

## Sequence

| | | | | | | | | | | | | | | | | |
|---|---|---|---|---|---|---|---|---|---|---|---|---|---|---|---|---|
| Ring 1 | 1 | 2 | 3 | 4 | - | - | - | - | - | - | - | - | - | - | - | - |
| Ring 2 | 5 | 6 | 7 | 8 | - | - | - | - | - | - | - | - | - | - | - | - |
| Ring 3 | - | - | - | - | - | - | - | - | - | - | - | - | - | - | - | - |
| Ring 4 | - | - | - | - | - | - | - | - | - | - | - | - | - | - | - | - |

**Intersection Level Of Service Report**
**Intersection 7: Alder Ave (NS) / Marygold Ave (EW)**

| | | | |
|---|---|---|---|
| Control Type: | Signalized | Delay (sec / veh): | 21.6 |
| Analysis Method: | HCM 2010 | Level Of Service: | C |
| Analysis Period: | 15 minutes | Volume to Capacity (v/c): | 0.693 |

**Intersection Setup**

| Name | Alder Avenue | | | Alder Avenue | | | Marygold Avenue | | | Marygold Avenue | | |
|---|---|---|---|---|---|---|---|---|---|---|---|---|
| Approach | Northbound | | | Southbound | | | Eastbound | | | Westbound | | |
| Lane Configuration | | | | | | | | | | | | |
| Turning Movement | Left | Thru | Right | Left | Thru | Right | Left | Thru | Right | Left | Thru | Right |
| Lane Width [ft] | 12.00 | 12.00 | 12.00 | 12.00 | 12.00 | 12.00 | 12.00 | 12.00 | 12.00 | 12.00 | 12.00 | 12.00 |
| No. of Lanes in Pocket | 0 | 0 | 1 | 0 | 0 | 0 | 0 | 0 | 0 | 0 | 0 | 0 |
| Pocket Length [ft] | 100.00 | 100.00 | 200.00 | 100.00 | 100.00 | 100.00 | 100.00 | 100.00 | 100.00 | 100.00 | 100.00 | 100.00 |
| Speed [mph] | 40.00 | | | 40.00 | | | 35.00 | | | 25.00 | | |
| Grade [%] | 0.00 | | | 0.00 | | | 0.00 | | | 0.00 | | |
| Crosswalk | Yes | | | Yes | | | Yes | | | Yes | | |

**volumes**

| Name | Alder Avenue | | | Alder Avenue | | | Marygold Avenue | | | Marygold Avenue | | |
|---|---|---|---|---|---|---|---|---|---|---|---|---|
| Base Volume Input [veh/h] | 28 | 367 | 32 | 42 | 242 | 74 | 134 | 127 | 20 | 14 | 76 | 22 |
| Base Volume Adjustment Factor | 1.0000 | 1.0000 | 1.0000 | 1.0000 | 1.0000 | 1.0000 | 1.0000 | 1.0000 | 1.0000 | 1.0000 | 1.0000 | 1.0000 |
| Heavy Vehicles Percentage [%] | 2.00 | 2.00 | 2.00 | 2.00 | 2.00 | 2.00 | 2.00 | 2.00 | 2.00 | 2.00 | 2.00 | 2.00 |
| Growth Rate | 1.00 | 1.00 | 1.00 | 1.00 | 1.00 | 1.00 | 1.00 | 1.00 | 1.00 | 1.00 | 1.00 | 1.00 |
| In-Process Volume [veh/h] | 0 | 0 | 0 | 0 | 0 | 0 | 0 | 0 | 0 | 0 | 0 | 0 |
| Site-Generated Trips [veh/h] | 5 | 61 | 18 | 0 | 41 | 0 | 0 | 13 | 2 | 9 | 10 | 0 |
| Diverted Trips [veh/h] | 0 | 0 | 0 | 0 | 0 | 0 | 0 | 0 | 0 | 0 | 0 | 0 |
| Pass-by Trips [veh/h] | 0 | 0 | 0 | 0 | 0 | 0 | 0 | 0 | 0 | 0 | 0 | 0 |
| Existing Site Adjustment Volume [veh/h] | 0 | 0 | 0 | 0 | 0 | 0 | 0 | 0 | 0 | 0 | 0 | 0 |
| Other Volume [veh/h] | 0 | 0 | 0 | 0 | 0 | 0 | 0 | 0 | 0 | 0 | 0 | 0 |
| Right-Turn on Red Volume [veh/h] | 0 | 0 | 0 | 0 | 0 | 0 | 0 | 0 | 0 | 0 | 0 | 0 |
| Total Hourly Volume [veh/h] | 33 | 428 | 50 | 42 | 283 | 74 | 134 | 140 | 22 | 23 | 86 | 22 |
| Peak Hour Factor | 0.9220 | 0.9220 | 0.9220 | 0.9220 | 0.9220 | 0.9220 | 0.9220 | 0.9220 | 0.9220 | 0.9220 | 0.9220 | 0.9220 |
| Other Adjustment Factor | 1.0000 | 1.0000 | 1.0000 | 1.0000 | 1.0000 | 1.0000 | 1.0000 | 1.0000 | 1.0000 | 1.0000 | 1.0000 | 1.0000 |
| Total 15-Minute Volume [veh/h] | 9 | 116 | 14 | 11 | 77 | 20 | 36 | 38 | 6 | 6 | 23 | 6 |
| Total Analysis Volume [veh/h] | 36 | 464 | 54 | 46 | 307 | 80 | 145 | 152 | 24 | 25 | 93 | 24 |
| Presence of On-Street Parking | No | | No | No | | No | No | | No | No | | No |
| On-Street Parking Maneuver Rate [/h] | 0 | 0 | 0 | 0 | 0 | 0 | 0 | 0 | 0 | 0 | 0 | 0 |
| Local Bus Stopping Rate [/h] | 0 | 0 | 0 | 0 | 0 | 0 | 0 | 0 | 0 | 0 | 0 | 0 |
| Pedestrian Volume [ped/h] | 0 | | | 0 | | | 0 | | | 0 | | |
| Bicycle Volume [bicycles/h] | 0 | | | 0 | | | 0 | | | 0 | | |

**Intersection Settings**

| | |
|---|---|
| Located in CBD | Yes |
| Signal Coordination Group | - |
| Cycle Length [s] | 90 |
| Coordination Type | Time of Day Pattern Coordinated |
| Actuation Type | Fully actuated |
| Offset [s] | 0.0 |
| Offset Reference | LeadGreen |
| Permissive Mode | SingleBand |
| Lost time [s] | 0.00 |

**Phasing & Timing**

| Control Type | Permiss | Permiss | Permiss | Permiss | Permiss | Permiss | Permiss | Permiss | Permiss | Permiss | Permiss | Permiss |
|---|---|---|---|---|---|---|---|---|---|---|---|---|
| Signal group | 0 | 2 | 0 | 0 | 6 | 0 | 0 | 8 | 0 | 0 | 4 | 0 |
| Auxiliary Signal Groups | | | | | | | | | | | | |
| Lead / Lag | - | - | - | - | - | - | - | - | - | - | - | - |
| Minimum Green [s] | 0 | 5 | 0 | 0 | 5 | 0 | 0 | 5 | 0 | 0 | 5 | 0 |
| Maximum Green [s] | 0 | 30 | 0 | 0 | 30 | 0 | 0 | 30 | 0 | 0 | 30 | 0 |
| Amber [s] | 0.0 | 3.0 | 0.0 | 0.0 | 3.0 | 0.0 | 0.0 | 3.0 | 0.0 | 0.0 | 3.0 | 0.0 |
| All red [s] | 0.0 | 1.0 | 0.0 | 0.0 | 1.0 | 0.0 | 0.0 | 1.0 | 0.0 | 0.0 | 1.0 | 0.0 |
| Split [s] | 0 | 55 | 0 | 0 | 55 | 0 | 0 | 35 | 0 | 0 | 35 | 0 |
| Vehicle Extension [s] | 0.0 | 3.0 | 0.0 | 0.0 | 3.0 | 0.0 | 0.0 | 3.0 | 0.0 | 0.0 | 3.0 | 0.0 |
| Walk [s] | 0 | 5 | 0 | 0 | 5 | 0 | 0 | 5 | 0 | 0 | 5 | 0 |
| Pedestrian Clearance [s] | 0 | 10 | 0 | 0 | 10 | 0 | 0 | 10 | 0 | 0 | 10 | 0 |
| I1, Start-Up Lost Time [s] | 0.0 | 2.0 | 0.0 | 0.0 | 2.0 | 0.0 | 0.0 | 2.0 | 0.0 | 0.0 | 2.0 | 0.0 |
| I2, Clearance Lost Time [s] | 0.0 | 2.0 | 0.0 | 0.0 | 2.0 | 0.0 | 0.0 | 2.0 | 0.0 | 0.0 | 2.0 | 0.0 |
| Minimum Recall | | No | | | No | | | No | | | No | |
| Maximum Recall | | No | | | No | | | No | | | No | |
| Pedestrian Recall | | No | | | No | | | No | | | No | |
| Detector Location [ft] | 0.0 | 0.0 | 0.0 | 0.0 | 0.0 | 0.0 | 0.0 | 0.0 | 0.0 | 0.0 | 0.0 | 0.0 |
| Detector Length [ft] | 0.0 | 0.0 | 0.0 | 0.0 | 0.0 | 0.0 | 0.0 | 0.0 | 0.0 | 0.0 | 0.0 | 0.0 |
| I, Upstream Filtering Factor | 1.00 | 1.00 | 1.00 | 1.00 | 1.00 | 1.00 | 1.00 | 1.00 | 1.00 | 1.00 | 1.00 | 1.00 |

**Exclusive Pedestrian Phase**

| | |
|---|---|
| Pedestrian Signal Group | 0 |
| Pedestrian Walk [s] | 0 |
| Pedestrian Clearance [s] | 0 |

**Lane Group Calculations**

| Lane Group | C | R | C | R | C | C |
|---|---|---|---|---|---|---|
| L, Total Lost Time per Cycle [s] | 4.00 | 4.00 | 4.00 | 4.00 | 4.00 | 4.00 |
| l1_p, Permitted Start-Up Lost Time [s] | 2.00 | 0.00 | 2.00 | 0.00 | 2.00 | 2.00 |
| l2, Clearance Lost Time [s] | 2.00 | 2.00 | 2.00 | 2.00 | 2.00 | 2.00 |
| g_i, Effective Green Time [s] | 57 | 57 | 57 | 57 | 25 | 25 |
| g / C, Green / Cycle | 0.63 | 0.63 | 0.63 | 0.63 | 0.28 | 0.28 |
| (v / s)_i Volume / Saturation Flow Rate | 0.44 | 0.04 | 0.42 | 0.06 | 0.25 | 0.10 |
| s, saturation flow rate [veh/h] | 1137 | 1425 | 833 | 1425 | 1266 | 1469 |
| c, Capacity [veh/h] | 764 | 903 | 573 | 903 | 409 | 454 |
| d1, Uniform Delay [s] | 11.06 | 6.26 | 12.82 | 6.38 | 32.06 | 25.74 |
| k, delay calibration | 0.50 | 0.50 | 0.50 | 0.50 | 0.26 | 0.11 |
| I, Upstream Filtering Factor | 1.00 | 1.00 | 1.00 | 1.00 | 1.00 | 1.00 |
| d2, Incremental Delay [s] | 4.35 | 0.13 | 4.89 | 0.19 | 7.68 | 0.39 |
| d3, Initial Queue Delay [s] | 0.00 | 0.00 | 0.00 | 0.00 | 0.00 | 0.00 |
| Rp, platoon ratio | 1.00 | 1.00 | 1.00 | 1.00 | 1.00 | 1.00 |
| PF, progression factor | 1.00 | 1.00 | 1.00 | 1.00 | 1.00 | 1.00 |

**Lane Group Results**

| | | | | | | |
|---|---|---|---|---|---|---|
| X, volume / capacity | 0.65 | 0.06 | 0.62 | 0.09 | 0.79 | 0.31 |
| d, Delay for Lane Group [s/veh] | 15.41 | 6.39 | 17.71 | 6.57 | 39.74 | 26.13 |
| Lane Group LOS | B | A | B | A | D | C |
| Critical Lane Group | Yes | No | No | No | Yes | No |
| 50th-Percentile Queue Length [veh] | 5.05 | 0.36 | 4.21 | 0.54 | 7.37 | 2.45 |
| 50th-Percentile Queue Length [ft] | 126.22 | 8.92 | 105.30 | 13.49 | 184.20 | 61.21 |
| 95th-Percentile Queue Length [veh] | 8.73 | 0.64 | 7.58 | 0.97 | 11.82 | 4.41 |
| 95th-Percentile Queue Length [ft] | 218.34 | 16.06 | 189.45 | 24.28 | 295.49 | 110.17 |

**Movement, Approach, & Intersection Results**

| | | | | | | | | | | | | |
|---|---|---|---|---|---|---|---|---|---|---|---|---|
| d_M, Delay for Movement [s/veh] | 15.41 | 15.41 | 6.39 | 17.71 | 17.71 | 6.57 | 39.74 | 39.74 | 39.74 | 26.13 | 26.13 | 26.13 |
| Movement LOS | B | B | A | B | B | A | D | D | D | C | C | C |
| d_A, Approach Delay [s/veh] | 14.53 | | | 15.65 | | | 39.74 | | | 26.13 | | |
| Approach LOS | B | | | B | | | D | | | C | | |
| d_I, Intersection Delay [s/veh] | 21.58 | | | | | | | | | | | |
| Intersection LOS | C | | | | | | | | | | | |
| Intersection V/C | 0.693 | | | | | | | | | | | |

## Sequence

| | | | | | | | | | | | | | | | | |
|---|---|---|---|---|---|---|---|---|---|---|---|---|---|---|---|---|
| Ring 1 | 2 | 4 | - | - | - | - | - | - | - | - | - | - | - | - | - | - |
| Ring 2 | 6 | 8 | - | - | - | - | - | - | - | - | - | - | - | - | - | - |
| Ring 3 | - | - | - | - | - | - | - | - | - | - | - | - | - | - | - | - |
| Ring 4 | - | - | - | - | - | - | - | - | - | - | - | - | - | - | - | - |

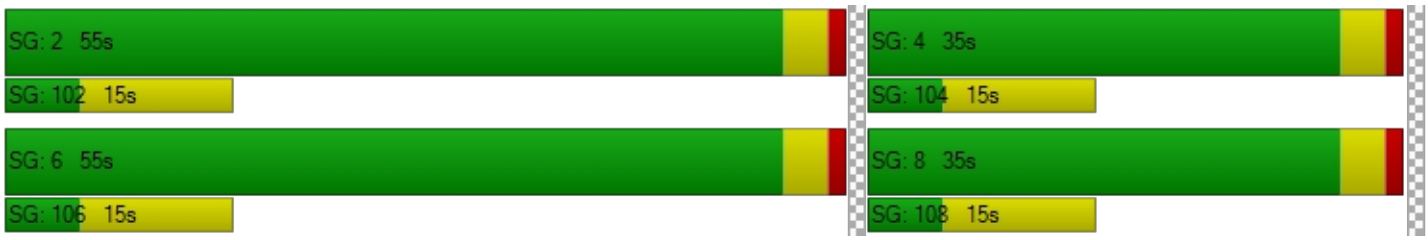

**Intersection Level Of Service Report**
**Intersection 14: Cedar Ave (NS) / I-10 Westbound Ramps (EW)**

| | | | |
|---|---|---|---|
| Control Type: | Signalized | Delay (sec / veh): | 32.6 |
| Analysis Method: | HCM 2010 | Level Of Service: | C |
| Analysis Period: | 15 minutes | Volume to Capacity (v/c): | 0.890 |

**Intersection Setup**

| Name | Cedar Avenue | | | Cedar Avenue | | | | | | I-10 Westbound Ramps | | |
|---|---|---|---|---|---|---|---|---|---|---|---|---|
| Approach | Northbound | | | Southbound | | | Eastbound | | | Westbound | | |
| Lane Configuration | | | | | | | | | | | | |
| Turning Movement | Left | Thru | Right | Left | Thru | Right | Left | Thru | Right | Left | Thru | Right |
| Lane Width [ft] | 12.00 | 12.00 | 12.00 | 12.00 | 12.00 | 12.00 | 12.00 | 12.00 | 12.00 | 12.00 | 12.00 | 12.00 |
| No. of Lanes in Pocket | 1 | 0 | 0 | 0 | 0 | 1 | 0 | 0 | 0 | 0 | 0 | 1 |
| Pocket Length [ft] | 305.00 | 100.00 | 100.00 | 100.00 | 100.00 | 100.00 | 100.00 | 100.00 | 100.00 | 100.00 | 100.00 | 485.00 |
| Speed [mph] | 40.00 | | | 40.00 | | | 30.00 | | | 30.00 | | |
| Grade [%] | 0.00 | | | 0.00 | | | 0.00 | | | 0.00 | | |
| Crosswalk | No | | | No | | | Yes | | | Yes | | |

**volumes**

| Name | Cedar Avenue | | | Cedar Avenue | | | | | | I-10 Westbound Ramps | | |
|---|---|---|---|---|---|---|---|---|---|---|---|---|
| Base Volume Input [veh/h] | 214 | 1312 | 0 | 0 | 1075 | 419 | 0 | 0 | 0 | 310 | 3 | 476 |
| Base Volume Adjustment Factor | 1.0000 | 1.0000 | 1.0000 | 1.0000 | 1.0000 | 1.0000 | 1.0000 | 1.0000 | 1.0000 | 1.0000 | 1.0000 | 1.0000 |
| Heavy Vehicles Percentage [%] | 5.00 | 5.00 | 2.00 | 2.00 | 5.00 | 5.00 | 2.00 | 2.00 | 2.00 | 6.00 | 6.00 | 6.00 |
| Growth Rate | 1.00 | 1.00 | 1.00 | 1.00 | 1.00 | 1.00 | 1.00 | 1.00 | 1.00 | 1.00 | 1.00 | 1.00 |
| In-Process Volume [veh/h] | 0 | 0 | 0 | 0 | 0 | 0 | 0 | 0 | 0 | 0 | 0 | 0 |
| Site-Generated Trips [veh/h] | 0 | 160 | 0 | 0 | 222 | 190 | 13 | 0 | 0 | 0 | 0 | 97 |
| Diverted Trips [veh/h] | 0 | 0 | 0 | 0 | 0 | 0 | 0 | 0 | 0 | 0 | 0 | 0 |
| Pass-by Trips [veh/h] | 0 | 0 | 0 | 0 | 0 | 0 | 0 | 0 | 0 | 0 | 0 | 0 |
| Existing Site Adjustment Volume [veh/h] | 0 | 0 | 0 | 0 | 0 | 0 | 0 | 0 | 0 | 0 | 0 | 0 |
| Other Volume [veh/h] | 0 | 0 | 0 | 0 | 0 | 0 | 0 | 0 | 0 | 0 | 0 | 0 |
| Right-Turn on Red Volume [veh/h] | 0 | 0 | 0 | 0 | 0 | 0 | 0 | 0 | 0 | 0 | 0 | 0 |
| Total Hourly Volume [veh/h] | 214 | 1472 | 0 | 0 | 1297 | 609 | 13 | 0 | 0 | 310 | 3 | 573 |
| Peak Hour Factor | 0.9350 | 0.9350 | 1.0000 | 1.0000 | 0.9350 | 0.9350 | 1.0000 | 1.0000 | 1.0000 | 0.9350 | 0.9350 | 0.9350 |
| Other Adjustment Factor | 1.0000 | 1.0000 | 1.0000 | 1.0000 | 1.0000 | 1.0000 | 1.0000 | 1.0000 | 1.0000 | 1.0000 | 1.0000 | 1.0000 |
| Total 15-Minute Volume [veh/h] | 57 | 394 | 0 | 0 | 347 | 163 | 3 | 0 | 0 | 83 | 1 | 153 |
| Total Analysis Volume [veh/h] | 229 | 1574 | 0 | 0 | 1387 | 651 | 13 | 0 | 0 | 332 | 3 | 613 |
| Presence of On-Street Parking | No | | No | No | | No | | | | No | | No |
| On-Street Parking Maneuver Rate [/h] | 0 | 0 | 0 | 0 | 0 | 0 | 0 | 0 | 0 | 0 | 0 | 0 |
| Local Bus Stopping Rate [/h] | 0 | 0 | 0 | 0 | 0 | 0 | 0 | 0 | 0 | 0 | 0 | 0 |
| Pedestrian Volume [ped/h] | 0 | | | 0 | | | 0 | | | 0 | | |
| Bicycle Volume [bicycles/h] | 0 | | | 0 | | | 0 | | | 0 | | |

**Intersection Settings**

| | |
|---|---|
| Located in CBD | No |
| Signal Coordination Group | 2 - NS - Cedar |
| Cycle Length [s] | 120 |
| Coordination Type | Time of Day Pattern Coordinated |
| Actuation Type | Fully actuated |
| Offset [s] | 82.0 |
| Offset Reference | LagFO |
| Permissive Mode | SingleBand |
| Lost time [s] | 12.00 |

**Phasing & Timing**

| Control Type | Protecte | Permiss | Permiss | Permiss | Permiss | Permiss | Permiss | Permiss | Permiss | Permiss | Permiss | Permiss |
|---|---|---|---|---|---|---|---|---|---|---|---|---|
| Signal group | 5 | 2 | 0 | 0 | 6 | 0 | 0 | 0 | 0 | 0 | 4 | 0 |
| Auxiliary Signal Groups | | | | | | | | | | | | |
| Lead / Lag | Lead | - | - | - | - | - | - | - | - | - | - | - |
| Minimum Green [s] | 5 | 5 | 0 | 0 | 5 | 0 | 0 | 0 | 0 | 0 | 5 | 0 |
| Maximum Green [s] | 30 | 30 | 0 | 0 | 30 | 0 | 0 | 0 | 0 | 0 | 30 | 0 |
| Amber [s] | 4.4 | 4.4 | 0.0 | 0.0 | 4.4 | 0.0 | 0.0 | 0.0 | 0.0 | 0.0 | 3.7 | 0.0 |
| All red [s] | 1.0 | 1.0 | 0.0 | 0.0 | 1.0 | 0.0 | 0.0 | 0.0 | 0.0 | 0.0 | 1.0 | 0.0 |
| Split [s] | 14 | 67 | 0 | 0 | 53 | 0 | 0 | 0 | 0 | 0 | 53 | 0 |
| Vehicle Extension [s] | 3.0 | 3.0 | 0.0 | 0.0 | 3.0 | 0.0 | 0.0 | 0.0 | 0.0 | 0.0 | 3.0 | 0.0 |
| Walk [s] | 0 | 7 | 0 | 0 | 7 | 0 | 0 | 0 | 0 | 0 | 7 | 0 |
| Pedestrian Clearance [s] | 0 | 17 | 0 | 0 | 17 | 0 | 0 | 0 | 0 | 0 | 10 | 0 |
| I1, Start-Up Lost Time [s] | 2.0 | 2.0 | 0.0 | 0.0 | 2.0 | 0.0 | 0.0 | 0.0 | 0.0 | 0.0 | 2.0 | 0.0 |
| I2, Clearance Lost Time [s] | 3.4 | 3.4 | 0.0 | 0.0 | 3.4 | 0.0 | 0.0 | 0.0 | 0.0 | 0.0 | 2.7 | 0.0 |
| Minimum Recall | No | No | | | No | | | | | | No | |
| Maximum Recall | No | No | | | No | | | | | | No | |
| Pedestrian Recall | No | No | | | No | | | | | | No | |
| Detector Location [ft] | 0.0 | 0.0 | 0.0 | 0.0 | 0.0 | 0.0 | 0.0 | 0.0 | 0.0 | 0.0 | 0.0 | 0.0 |
| Detector Length [ft] | 0.0 | 0.0 | 0.0 | 0.0 | 0.0 | 0.0 | 0.0 | 0.0 | 0.0 | 0.0 | 0.0 | 0.0 |
| I, Upstream Filtering Factor | 1.00 | 1.00 | 1.00 | 1.00 | 1.00 | 1.00 | 1.00 | 1.00 | 1.00 | 1.00 | 1.00 | 1.00 |

**Exclusive Pedestrian Phase**

| | |
|---|---|
| Pedestrian Signal Group | 0 |
| Pedestrian Walk [s] | 0 |
| Pedestrian Clearance [s] | 0 |

**Lane Group Calculations**

| Lane Group | L | C | C | R | | C | R |
|---|---|---|---|---|---|---|---|
| L, Total Lost Time per Cycle [s] | 5.40 | 5.40 | 5.40 | 5.40 | | 4.70 | 4.70 |
| l1_p, Permitted Start-Up Lost Time [s] | 0.00 | 0.00 | 0.00 | 0.00 | | 0.00 | 0.00 |
| l2, Clearance Lost Time [s] | 3.40 | 3.40 | 3.40 | 3.40 | | 2.70 | 2.70 |
| g_i, Effective Green Time [s] | 9 | 70 | 56 | 56 | | 40 | 40 |
| g / C, Green / Cycle | 0.07 | 0.58 | 0.46 | 0.46 | | 0.33 | 0.33 |
| (v / s)_i Volume / Saturation Flow Rate | 0.07 | 0.32 | 0.28 | 0.42 | | 0.29 | 0.31 |
| s, saturation flow rate [veh/h] | 3347 | 4929 | 4929 | 1538 | | 1649 | 1524 |
| c, Capacity [veh/h] | 242 | 2868 | 2289 | 714 | | 551 | 509 |
| d1, Uniform Delay [s] | 55.39 | 15.41 | 23.95 | 29.84 | | 37.40 | 38.53 |
| k, delay calibration | 0.11 | 0.50 | 0.50 | 0.50 | | 0.25 | 0.29 |
| I, Upstream Filtering Factor | 1.00 | 1.00 | 1.00 | 1.00 | | 1.00 | 1.00 |
| d2, Incremental Delay [s] | 16.55 | 0.76 | 1.20 | 17.91 | | 9.02 | 17.03 |
| d3, Initial Queue Delay [s] | 0.00 | 0.00 | 0.00 | 0.00 | | 0.00 | 0.00 |
| Rp, platoon ratio | 1.00 | 1.00 | 1.00 | 1.00 | | 1.00 | 1.00 |
| PF, progression factor | 1.00 | 1.00 | 1.00 | 1.00 | | 1.00 | 1.00 |

**Lane Group Results**

| | | | | | | | |
|---|---|---|---|---|---|---|---|
| X, volume / capacity | 0.95 | 0.55 | 0.61 | 0.91 | | 0.86 | 0.93 |
| d, Delay for Lane Group [s/veh] | 71.94 | 16.17 | 25.15 | 47.75 | | 46.42 | 55.56 |
| Lane Group LOS | E | B | C | D | | D | E |
| Critical Lane Group | Yes | No | No | Yes | | No | Yes |
| 50th-Percentile Queue Length [veh] | 3.95 | 8.38 | 9.59 | 19.93 | | 14.30 | 15.60 |
| 50th-Percentile Queue Length [ft] | 98.69 | 209.42 | 239.68 | 498.16 | | 357.54 | 390.11 |
| 95th-Percentile Queue Length [veh] | 7.11 | 13.12 | 14.67 | 27.25 | | 20.50 | 22.08 |
| 95th-Percentile Queue Length [ft] | 177.65 | 328.08 | 366.63 | 681.18 | | 512.59 | 552.07 |

**Movement, Approach, & Intersection Results**

| | | | | | | | | | | | | |
|---|---|---|---|---|---|---|---|---|---|---|---|---|
| d_M, Delay for Movement [s/veh] | 71.94 | 16.17 | 0.00 | 0.00 | 25.15 | 47.75 | 0.00 | 0.00 | 0.00 | 46.42 | 46.42 | 53.47 |
| Movement LOS | E | B | | | C | D | | | | D | D | D |
| d_A, Approach Delay [s/veh] | 23.26 | | | 32.37 | | | 0.00 | | | 50.97 | | |
| Approach LOS | C | | | C | | | A | | | D | | |
| d_I, Intersection Delay [s/veh] | 32.62 | | | | | | | | | | | |
| Intersection LOS | C | | | | | | | | | | | |
| Intersection V/C | 0.890 | | | | | | | | | | | |

## Sequence

| | | | | | | | | | | | | | | | | |
|---|---|---|---|---|---|---|---|---|---|---|---|---|---|---|---|---|
| Ring 1 | - | 2 | 4 | - | - | - | - | - | - | - | - | - | - | - | - | - |
| Ring 2 | 5 | 6 | - | - | - | - | - | - | - | - | - | - | - | - | - | - |
| Ring 3 | - | - | - | - | - | - | - | - | - | - | - | - | - | - | - | - |
| Ring 4 | - | - | - | - | - | - | - | - | - | - | - | - | - | - | - | - |

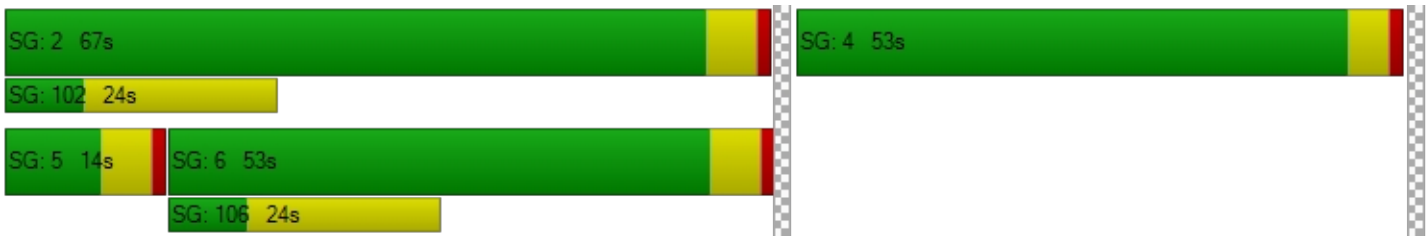

**Intersection Level Of Service Report**
**Intersection 15: Cedar Ave (NS) / I-10 Eastbound Ramps (EW)**

| | | | |
|---|---|---|---|
| Control Type: | Signalized | Delay (sec / veh): | 35.6 |
| Analysis Method: | HCM 2010 | Level Of Service: | D |
| Analysis Period: | 15 minutes | Volume to Capacity (v/c): | 0.774 |

**Intersection Setup**

| Name | Cedar Avenue | | | Cedar Avenue | | | | | | I-10 Eastbound Ramps | | |
|---|---|---|---|---|---|---|---|---|---|---|---|---|
| Approach | Northbound | | | Southbound | | | Eastbound | | | Westbound | | |
| Lane Configuration | | | | | | | | | | | | |
| Turning Movement | Left | Thru | Right | Left | Thru | Right | Left | Thru | Right | Left | Thru | Right |
| Lane Width [ft] | 12.00 | 12.00 | 12.00 | 12.00 | 12.00 | 12.00 | 12.00 | 12.00 | 12.00 | 12.00 | 12.00 | 12.00 |
| No. of Lanes in Pocket | 0 | 0 | 1 | 1 | 0 | 0 | 1 | 0 | 0 | 0 | 0 | 0 |
| Pocket Length [ft] | 100.00 | 100.00 | 555.00 | 305.00 | 100.00 | 100.00 | 340.00 | 100.00 | 100.00 | 100.00 | 100.00 | 100.00 |
| Speed [mph] | 40.00 | | | 40.00 | | | 30.00 | | | 30.00 | | |
| Grade [%] | 0.00 | | | 0.00 | | | 0.00 | | | 0.00 | | |
| Crosswalk | No | | | No | | | Yes | | | Yes | | |

**volumes**

| Name | Cedar Avenue | | | Cedar Avenue | | | | | | I-10 Eastbound Ramps | | |
|---|---|---|---|---|---|---|---|---|---|---|---|---|
| Base Volume Input [veh/h] | 0 | 843 | 288 | 374 | 1034 | 0 | 688 | 2 | 183 | 0 | 0 | 0 |
| Base Volume Adjustment Factor | 1.0000 | 1.0000 | 1.0000 | 1.0000 | 1.0000 | 1.0000 | 1.0000 | 1.0000 | 1.0000 | 1.0000 | 1.0000 | 1.0000 |
| Heavy Vehicles Percentage [%] | 2.00 | 5.00 | 5.00 | 5.00 | 5.00 | 2.00 | 6.00 | 6.00 | 6.00 | 2.00 | 2.00 | 2.00 |
| Growth Rate | 1.00 | 1.00 | 1.00 | 1.00 | 1.00 | 1.00 | 1.00 | 1.00 | 1.00 | 1.00 | 1.00 | 1.00 |
| In-Process Volume [veh/h] | 0 | 0 | 0 | 0 | 0 | 0 | 0 | 0 | 0 | 0 | 0 | 0 |
| Site-Generated Trips [veh/h] | 0 | 62 | 0 | 157 | 65 | 0 | 98 | 0 | 0 | 0 | 0 | 0 |
| Diverted Trips [veh/h] | 0 | 0 | 0 | 0 | 0 | 0 | 0 | 0 | 0 | 0 | 0 | 0 |
| Pass-by Trips [veh/h] | 0 | 0 | 0 | 0 | 0 | 0 | 0 | 0 | 0 | 0 | 0 | 0 |
| Existing Site Adjustment Volume [veh/h] | 0 | 0 | 0 | 0 | 0 | 0 | 0 | 0 | 0 | 0 | 0 | 0 |
| Other Volume [veh/h] | 0 | 0 | 0 | 0 | 0 | 0 | 0 | 0 | 0 | 0 | 0 | 0 |
| Right-Turn on Red Volume [veh/h] | 0 | 0 | 0 | 0 | 0 | 0 | 0 | 0 | 0 | 0 | 0 | 0 |
| Total Hourly Volume [veh/h] | 0 | 905 | 288 | 531 | 1099 | 0 | 786 | 2 | 183 | 0 | 0 | 0 |
| Peak Hour Factor | 1.0000 | 0.9240 | 0.9240 | 0.9240 | 0.9240 | 1.0000 | 0.9240 | 0.9240 | 0.9240 | 1.0000 | 1.0000 | 1.0000 |
| Other Adjustment Factor | 1.0000 | 1.0000 | 1.0000 | 1.0000 | 1.0000 | 1.0000 | 1.0000 | 1.0000 | 1.0000 | 1.0000 | 1.0000 | 1.0000 |
| Total 15-Minute Volume [veh/h] | 0 | 245 | 78 | 144 | 297 | 0 | 213 | 1 | 50 | 0 | 0 | 0 |
| Total Analysis Volume [veh/h] | 0 | 979 | 312 | 575 | 1189 | 0 | 851 | 2 | 198 | 0 | 0 | 0 |
| Presence of On-Street Parking | No | | No | No | | No | No | | No | | | |
| On-Street Parking Maneuver Rate [/h] | 0 | 0 | 0 | 0 | 0 | 0 | 0 | 0 | 0 | 0 | 0 | 0 |
| Local Bus Stopping Rate [/h] | 0 | 0 | 0 | 0 | 0 | 0 | 0 | 0 | 0 | 0 | 0 | 0 |
| Pedestrian Volume [ped/h] | 0 | | | 0 | | | 0 | | | 0 | | |
| Bicycle Volume [bicycles/h] | 0 | | | 0 | | | 0 | | | 0 | | |

**Intersection Settings**

| | |
|---|---|
| Located in CBD | No |
| Signal Coordination Group | 2 - NS - Cedar |
| Cycle Length [s] | 120 |
| Coordination Type | Time of Day Pattern Coordinated |
| Actuation Type | Fully actuated |
| Offset [s] | 78.0 |
| Offset Reference | LagFO |
| Permissive Mode | SingleBand |
| Lost time [s] | 12.00 |

**Phasing & Timing**

| Control Type | Permiss | Permiss | Permiss | Protecte | Permiss | Permiss | Permiss | Permiss | Permiss | Permiss | Permiss | Permiss |
|---|---|---|---|---|---|---|---|---|---|---|---|---|
| Signal group | 0 | 2 | 0 | 1 | 6 | 0 | 0 | 8 | 0 | 0 | 0 | 0 |
| Auxiliary Signal Groups | | | | | | | | | | | | |
| Lead / Lag | - | - | - | Lead | - | - | - | - | - | - | - | - |
| Minimum Green [s] | 0 | 5 | 0 | 5 | 5 | 0 | 0 | 5 | 0 | 0 | 0 | 0 |
| Maximum Green [s] | 0 | 30 | 0 | 30 | 30 | 0 | 0 | 30 | 0 | 0 | 0 | 0 |
| Amber [s] | 0.0 | 4.4 | 0.0 | 4.4 | 4.4 | 0.0 | 0.0 | 3.7 | 0.0 | 0.0 | 0.0 | 0.0 |
| All red [s] | 0.0 | 1.0 | 0.0 | 1.0 | 1.0 | 0.0 | 0.0 | 1.0 | 0.0 | 0.0 | 0.0 | 0.0 |
| Split [s] | 0 | 34 | 0 | 28 | 62 | 0 | 0 | 58 | 0 | 0 | 0 | 0 |
| Vehicle Extension [s] | 0.0 | 3.0 | 0.0 | 3.0 | 3.0 | 0.0 | 0.0 | 3.0 | 0.0 | 0.0 | 0.0 | 0.0 |
| Walk [s] | 0 | 7 | 0 | 0 | 7 | 0 | 0 | 7 | 0 | 0 | 0 | 0 |
| Pedestrian Clearance [s] | 0 | 21 | 0 | 0 | 16 | 0 | 0 | 10 | 0 | 0 | 0 | 0 |
| I1, Start-Up Lost Time [s] | 0.0 | 2.0 | 0.0 | 2.0 | 2.0 | 0.0 | 0.0 | 2.0 | 0.0 | 0.0 | 0.0 | 0.0 |
| I2, Clearance Lost Time [s] | 0.0 | 3.4 | 0.0 | 3.4 | 3.4 | 0.0 | 0.0 | 2.7 | 0.0 | 0.0 | 0.0 | 0.0 |
| Minimum Recall | | No | | No | No | | | No | | | | |
| Maximum Recall | | No | | No | No | | | No | | | | |
| Pedestrian Recall | | No | | No | No | | | No | | | | |
| Detector Location [ft] | 0.0 | 0.0 | 0.0 | 0.0 | 0.0 | 0.0 | 0.0 | 0.0 | 0.0 | 0.0 | 0.0 | 0.0 |
| Detector Length [ft] | 0.0 | 0.0 | 0.0 | 0.0 | 0.0 | 0.0 | 0.0 | 0.0 | 0.0 | 0.0 | 0.0 | 0.0 |
| I, Upstream Filtering Factor | 1.00 | 1.00 | 1.00 | 1.00 | 1.00 | 1.00 | 1.00 | 1.00 | 1.00 | 1.00 | 1.00 | 1.00 |

**Exclusive Pedestrian Phase**

| | |
|---|---|
| Pedestrian Signal Group | 0 |
| Pedestrian Walk [s] | 0 |
| Pedestrian Clearance [s] | 0 |

**Lane Group Calculations**

| Lane Group | C | R | L | C | L | C | |
|---|---|---|---|---|---|---|---|
| L, Total Lost Time per Cycle [s] | 5.40 | 5.40 | 5.40 | 5.40 | 4.70 | 4.70 | |
| l1_p, Permitted Start-Up Lost Time [s] | 0.00 | 0.00 | 0.00 | 0.00 | 0.00 | 0.00 | |
| l2, Clearance Lost Time [s] | 3.40 | 3.40 | 3.40 | 3.40 | 2.70 | 2.70 | |
| g_i, Effective Green Time [s] | 40 | 40 | 22 | 68 | 42 | 42 | |
| g / C, Green / Cycle | 0.34 | 0.34 | 0.19 | 0.57 | 0.35 | 0.35 | |
| (v / s)_i Volume / Saturation Flow Rate | 0.20 | 0.20 | 0.17 | 0.24 | 0.31 | 0.32 | |
| s, saturation flow rate [veh/h] | 4929 | 1538 | 3347 | 4929 | 1707 | 1633 | |
| c, Capacity [veh/h] | 1660 | 518 | 623 | 2799 | 594 | 568 | |
| d1, Uniform Delay [s] | 32.92 | 33.09 | 47.98 | 14.76 | 36.83 | 37.59 | |
| k, delay calibration | 0.50 | 0.50 | 0.11 | 0.50 | 0.23 | 0.26 | |
| I, Upstream Filtering Factor | 1.00 | 1.00 | 1.00 | 1.00 | 1.00 | 1.00 | |
| d2, Incremental Delay [s] | 1.55 | 5.12 | 6.37 | 0.47 | 9.19 | 14.07 | |
| d3, Initial Queue Delay [s] | 0.00 | 0.00 | 0.00 | 0.00 | 0.00 | 0.00 | |
| Rp, platoon ratio | 1.00 | 1.00 | 1.00 | 1.00 | 1.00 | 1.00 | |
| PF, progression factor | 1.00 | 1.00 | 1.00 | 1.00 | 1.00 | 1.00 | |

**Lane Group Results**

| | | | | | | | |
|---|---|---|---|---|---|---|---|
| X, volume / capacity | 0.59 | 0.60 | 0.92 | 0.42 | 0.88 | 0.92 | |
| d, Delay for Lane Group [s/veh] | 34.46 | 38.21 | 54.35 | 15.24 | 46.03 | 51.66 | |
| Lane Group LOS | C | D | D | B | D | D | |
| Critical Lane Group | No | Yes | Yes | No | No | Yes | |
| 50th-Percentile Queue Length [veh] | 7.88 | 8.08 | 8.81 | 5.91 | 15.82 | 16.82 | |
| 50th-Percentile Queue Length [ft] | 197.04 | 202.09 | 220.20 | 147.63 | 395.49 | 420.44 | |
| 95th-Percentile Queue Length [veh] | 12.49 | 12.75 | 13.68 | 9.89 | 22.34 | 23.54 | |
| 95th-Percentile Queue Length [ft] | 312.15 | 318.65 | 341.89 | 247.26 | 558.57 | 588.58 | |

**Movement, Approach, & Intersection Results**

| | | | | | | | | | | | | |
|---|---|---|---|---|---|---|---|---|---|---|---|---|
| d_M, Delay for Movement [s/veh] | 0.00 | 34.46 | 38.21 | 54.35 | 15.24 | 0.00 | 48.18 | 51.66 | 51.66 | 0.00 | 0.00 | 0.00 |
| Movement LOS | | C | D | D | B | | D | D | D | | | |
| d_A, Approach Delay [s/veh] | 35.37 | | | 27.99 | | | 48.85 | | | 0.00 | | |
| Approach LOS | D | | | C | | | D | | | A | | |
| d_I, Intersection Delay [s/veh] | 35.65 | | | | | | | | | | | |
| Intersection LOS | D | | | | | | | | | | | |
| Intersection V/C | 0.774 | | | | | | | | | | | |

## Sequence

| | | | | | | | | | | | | | | | | |
|---|---|---|---|---|---|---|---|---|---|---|---|---|---|---|---|---|
| Ring 1 | 1 | 2 | - | - | - | - | - | - | - | - | - | - | - | - | - | - |
| Ring 2 | - | 6 | 8 | - | - | - | - | - | - | - | - | - | - | - | - | - |
| Ring 3 | - | - | - | - | - | - | - | - | - | - | - | - | - | - | - | - |
| Ring 4 | - | - | - | - | - | - | - | - | - | - | - | - | - | - | - | - |

# Year 2035 without Project
# Level of Service Calculations

**Intersection Level Of Service Report**
**Intersection 1: Sierra Ave (NS) / San Bernardino Ave (EW)**

| | | | |
|---|---|---|---|
| Control Type: | Signalized | Delay (sec / veh): | 34.9 |
| Analysis Method: | HCM 2010 | Level Of Service: | C |
| Analysis Period: | 15 minutes | Volume to Capacity (v/c): | 0.779 |

**Intersection Setup**

| Name | Sierra Avenue | | | Sierra Avenue | | | San Bernardino Avenue | | | San Bernardino Avenue | | |
|---|---|---|---|---|---|---|---|---|---|---|---|---|
| Approach | Northbound | | | Southbound | | | Eastbound | | | Westbound | | |
| Lane Configuration | | | | | | | | | | | | |
| Turning Movement | Left | Thru | Right | Left | Thru | Right | Left | Thru | Right | Left | Thru | Right |
| Lane Width [ft] | 12.00 | 12.00 | 12.00 | 12.00 | 12.00 | 12.00 | 12.00 | 12.00 | 12.00 | 12.00 | 12.00 | 12.00 |
| No. of Lanes in Pocket | 1 | 0 | 1 | 1 | 0 | 0 | 1 | 0 | 0 | 1 | 0 | 0 |
| Pocket Length [ft] | 140.00 | 100.00 | 140.00 | 150.00 | 100.00 | 100.00 | 150.00 | 100.00 | 100.00 | 240.00 | 100.00 | 100.00 |
| Speed [mph] | 35.00 | | | 35.00 | | | 35.00 | | | 30.00 | | |
| Grade [%] | 0.00 | | | 0.00 | | | 0.00 | | | 0.00 | | |
| Crosswalk | Yes | | | Yes | | | Yes | | | Yes | | |

**volumes**

| Name | Sierra Avenue | | | Sierra Avenue | | | San Bernardino Avenue | | | San Bernardino Avenue | | |
|---|---|---|---|---|---|---|---|---|---|---|---|---|
| Base Volume Input [veh/h] | 70 | 671 | 99 | 49 | 1231 | 79 | 86 | 302 | 101 | 187 | 255 | 27 |
| Base Volume Adjustment Factor | 1.0000 | 1.0000 | 1.0000 | 1.0000 | 1.0000 | 1.0000 | 1.0000 | 1.0000 | 1.0000 | 1.0000 | 1.0000 | 1.0000 |
| Heavy Vehicles Percentage [%] | 2.00 | 2.00 | 2.00 | 2.00 | 2.00 | 2.00 | 2.00 | 2.00 | 2.00 | 2.00 | 2.00 | 2.00 |
| Growth Rate | 1.00 | 1.00 | 1.00 | 1.00 | 1.00 | 1.00 | 1.00 | 1.00 | 1.00 | 1.00 | 1.00 | 1.00 |
| In-Process Volume [veh/h] | 0 | 0 | 0 | 0 | 0 | 0 | 0 | 0 | 0 | 0 | 0 | 0 |
| Site-Generated Trips [veh/h] | 0 | 0 | 0 | 0 | 0 | 0 | 0 | 0 | 0 | 0 | 0 | 0 |
| Diverted Trips [veh/h] | 0 | 0 | 0 | 0 | 0 | 0 | 0 | 0 | 0 | 0 | 0 | 0 |
| Pass-by Trips [veh/h] | 0 | 0 | 0 | 0 | 0 | 0 | 0 | 0 | 0 | 0 | 0 | 0 |
| Existing Site Adjustment Volume [veh/h] | 0 | 0 | 0 | 0 | 0 | 0 | 0 | 0 | 0 | 0 | 0 | 0 |
| Other Volume [veh/h] | 0 | 0 | 0 | 0 | 0 | 0 | 0 | 0 | 0 | 0 | 0 | 0 |
| Right-Turn on Red Volume [veh/h] | 0 | 0 | 0 | 0 | 0 | 0 | 0 | 0 | 0 | 0 | 0 | 0 |
| Total Hourly Volume [veh/h] | 70 | 671 | 99 | 49 | 1231 | 79 | 86 | 302 | 101 | 187 | 255 | 27 |
| Peak Hour Factor | 0.9020 | 0.9020 | 0.9020 | 0.9020 | 0.9200 | 0.9020 | 0.9020 | 0.9020 | 0.9020 | 0.9020 | 0.9020 | 0.9020 |
| Other Adjustment Factor | 1.0000 | 1.0000 | 1.0000 | 1.0000 | 1.0000 | 1.0000 | 1.0000 | 1.0000 | 1.0000 | 1.0000 | 1.0000 | 1.0000 |
| Total 15-Minute Volume [veh/h] | 19 | 186 | 27 | 14 | 335 | 22 | 24 | 84 | 28 | 52 | 71 | 7 |
| Total Analysis Volume [veh/h] | 78 | 744 | 110 | 54 | 1338 | 88 | 95 | 335 | 112 | 207 | 283 | 30 |
| Presence of On-Street Parking | No | | No | No | | No | No | | No | No | | No |
| On-Street Parking Maneuver Rate [/h] | 0 | 0 | 0 | 0 | 0 | 0 | 0 | 0 | 0 | 0 | 0 | 0 |
| Local Bus Stopping Rate [/h] | 0 | 0 | 0 | 0 | 0 | 0 | 0 | 0 | 0 | 0 | 0 | 0 |
| Pedestrian Volume [ped/h] | 0 | | | 0 | | | 0 | | | 0 | | |
| Bicycle Volume [bicycles/h] | 0 | | | 0 | | | 0 | | | 0 | | |

**Intersection Settings**

| | |
|---|---|
| Located in CBD | No |
| Signal Coordination Group | 1 - NS - Sierra |
| Cycle Length [s] | 120 |
| Coordination Type | Time of Day Pattern Coordinated |
| Actuation Type | Fully actuated |
| Offset [s] | 0.0 |
| Offset Reference | LagFO |
| Permissive Mode | SingleBand |
| Lost time [s] | 16.00 |

**Phasing & Timing**

| Control Type | Protecte | Permiss | Permiss | Protecte | Permiss | Permiss | Protecte | Permiss | Permiss | Protecte | Permiss | Permiss |
|---|---|---|---|---|---|---|---|---|---|---|---|---|
| Signal group | 5 | 2 | 0 | 1 | 6 | 0 | 3 | 8 | 0 | 7 | 4 | 0 |
| Auxiliary Signal Groups | | | | | | | | | | | | |
| Lead / Lag | Lead | - | - | Lead | - | - | Lead | - | - | Lead | - | - |
| Minimum Green [s] | 5 | 5 | 0 | 5 | 5 | 0 | 5 | 5 | 0 | 5 | 5 | 0 |
| Maximum Green [s] | 30 | 30 | 0 | 30 | 30 | 0 | 30 | 30 | 0 | 30 | 30 | 0 |
| Amber [s] | 4.1 | 4.1 | 0.0 | 4.1 | 4.1 | 0.0 | 4.1 | 4.1 | 0.0 | 3.7 | 3.7 | 0.0 |
| All red [s] | 1.0 | 1.0 | 0.0 | 1.0 | 1.0 | 0.0 | 1.0 | 1.0 | 0.0 | 1.0 | 1.0 | 0.0 |
| Split [s] | 11 | 51 | 0 | 11 | 51 | 0 | 17 | 41 | 0 | 17 | 41 | 0 |
| Vehicle Extension [s] | 3.0 | 3.0 | 0.0 | 3.0 | 3.0 | 0.0 | 3.0 | 3.0 | 0.0 | 3.0 | 3.0 | 0.0 |
| Walk [s] | 0 | 7 | 0 | 0 | 7 | 0 | 0 | 7 | 0 | 0 | 7 | 0 |
| Pedestrian Clearance [s] | 0 | 22 | 0 | 0 | 23 | 0 | 0 | 28 | 0 | 0 | 25 | 0 |
| l1, Start-Up Lost Time [s] | 2.0 | 2.0 | 0.0 | 2.0 | 2.0 | 0.0 | 2.0 | 2.0 | 0.0 | 2.0 | 2.0 | 0.0 |
| l2, Clearance Lost Time [s] | 3.1 | 3.1 | 0.0 | 3.1 | 3.1 | 0.0 | 3.1 | 3.1 | 0.0 | 2.7 | 2.7 | 0.0 |
| Minimum Recall | No | No | | No | No | | No | No | | No | No | |
| Maximum Recall | No | No | | No | No | | No | No | | No | No | |
| Pedestrian Recall | No | No | | No | No | | No | No | | No | No | |
| Detector Location [ft] | 0.0 | 0.0 | 0.0 | 0.0 | 0.0 | 0.0 | 0.0 | 0.0 | 0.0 | 0.0 | 0.0 | 0.0 |
| Detector Length [ft] | 0.0 | 0.0 | 0.0 | 0.0 | 0.0 | 0.0 | 0.0 | 0.0 | 0.0 | 0.0 | 0.0 | 0.0 |
| I, Upstream Filtering Factor | 1.00 | 1.00 | 1.00 | 1.00 | 1.00 | 1.00 | 1.00 | 1.00 | 1.00 | 1.00 | 1.00 | 1.00 |

**Exclusive Pedestrian Phase**

| | |
|---|---|
| Pedestrian Signal Group | 0 |
| Pedestrian Walk [s] | 0 |
| Pedestrian Clearance [s] | 0 |

**Lane Group Calculations**

| Lane Group | L | C | R | L | C | C | L | C | C | L | C | C |
|---|---|---|---|---|---|---|---|---|---|---|---|---|
| L, Total Lost Time per Cycle [s] | 5.10 | 5.10 | 5.10 | 5.10 | 5.10 | 5.10 | 5.10 | 5.10 | 5.10 | 4.70 | 4.70 | 4.70 |
| l1_p, Permitted Start-Up Lost Time [s] | 0.00 | 0.00 | 0.00 | 0.00 | 0.00 | 0.00 | 0.00 | 0.00 | 0.00 | 0.00 | 0.00 | 0.00 |
| l2, Clearance Lost Time [s] | 3.10 | 3.10 | 3.10 | 3.10 | 3.10 | 3.10 | 3.10 | 3.10 | 3.10 | 2.70 | 2.70 | 2.70 |
| g_i, Effective Green Time [s] | 6 | 65 | 65 | 5 | 64 | 64 | 8 | 18 | 18 | 12 | 22 | 22 |
| g / C, Green / Cycle | 0.05 | 0.54 | 0.54 | 0.04 | 0.53 | 0.53 | 0.07 | 0.15 | 0.15 | 0.10 | 0.18 | 0.18 |
| (v / s)_i Volume / Saturation Flow Rate | 0.04 | 0.21 | 0.07 | 0.03 | 0.39 | 0.39 | 0.05 | 0.12 | 0.13 | 0.12 | 0.09 | 0.09 |
| s, saturation flow rate [veh/h] | 1774 | 3547 | 1583 | 1774 | 1863 | 1823 | 1774 | 1863 | 1706 | 1774 | 1863 | 1801 |
| c, Capacity [veh/h] | 89 | 1923 | 858 | 71 | 991 | 970 | 120 | 276 | 253 | 183 | 342 | 331 |
| d1, Uniform Delay [s] | 55.69 | 8.96 | 7.97 | 56.30 | 12.19 | 12.24 | 55.15 | 49.72 | 49.83 | 53.85 | 43.71 | 43.74 |
| k, delay calibration | 0.18 | 0.50 | 0.50 | 0.11 | 0.50 | 0.50 | 0.11 | 0.11 | 0.11 | 0.45 | 0.11 | 0.11 |
| I, Upstream Filtering Factor | 1.00 | 1.00 | 1.00 | 1.00 | 1.00 | 1.00 | 1.00 | 1.00 | 1.00 | 1.00 | 1.00 | 1.00 |
| d2, Incremental Delay [s] | 32.79 | 0.59 | 0.31 | 15.60 | 4.62 | 4.81 | 11.06 | 6.63 | 7.85 | 103.31 | 0.98 | 1.02 |
| d3, Initial Queue Delay [s] | 0.00 | 0.00 | 0.00 | 0.00 | 0.00 | 0.00 | 0.00 | 0.00 | 0.00 | 0.00 | 0.00 | 0.00 |
| Rp, platoon ratio | 1.33 | 1.33 | 1.33 | 1.33 | 1.33 | 1.33 | 1.00 | 1.00 | 1.00 | 1.00 | 1.00 | 1.00 |
| PF, progression factor | 1.00 | 1.00 | 1.00 | 1.00 | 1.00 | 1.00 | 1.00 | 1.00 | 1.00 | 1.00 | 1.00 | 1.00 |

**Lane Group Results**

| | | | | | | | | | | | | |
|---|---|---|---|---|---|---|---|---|---|---|---|---|
| X, volume / capacity | 0.88 | 0.39 | 0.13 | 0.76 | 0.73 | 0.73 | 0.79 | 0.84 | 0.85 | 1.13 | 0.46 | 0.47 |
| d, Delay for Lane Group [s/veh] | 88.48 | 9.55 | 8.28 | 71.90 | 16.81 | 17.05 | 66.22 | 56.34 | 57.69 | 157.16 | 44.69 | 44.76 |
| Lane Group LOS | F | A | A | E | B | B | E | E | E | F | D | D |
| Critical Lane Group | Yes | No | No | No | No | Yes | No | No | Yes | Yes | No | No |
| 50th-Percentile Queue Length [veh] | 3.10 | 3.28 | 0.91 | 1.89 | 9.42 | 9.37 | 3.18 | 7.19 | 6.79 | 10.75 | 4.31 | 4.20 |
| 50th-Percentile Queue Length [ft] | 77.41 | 81.94 | 22.86 | 47.35 | 235.52 | 234.19 | 79.45 | 179.82 | 169.81 | 268.79 | 107.76 | 105.10 |
| 95th-Percentile Queue Length [veh] | 5.57 | 5.90 | 1.65 | 3.41 | 14.45 | 14.39 | 5.72 | 11.59 | 11.07 | 16.93 | 7.72 | 7.57 |
| 95th-Percentile Queue Length [ft] | 139.33 | 147.50 | 41.15 | 85.23 | 361.37 | 359.68 | 143.02 | 289.78 | 276.67 | 423.22 | 192.88 | 189.17 |

**Movement, Approach, & Intersection Results**

| | | | | | | | | | | | | |
|---|---|---|---|---|---|---|---|---|---|---|---|---|
| d_M, Delay for Movement [s/veh] | 88.48 | 9.55 | 8.28 | 71.90 | 16.92 | 17.05 | 66.22 | 56.76 | 57.69 | 157.16 | 44.72 | 44.76 |
| Movement LOS | F | A | A | E | B | B | E | E | E | F | D | D |
| d_A, Approach Delay [s/veh] | 16.00 | | | 18.93 | | | 58.61 | | | 89.48 | | |
| Approach LOS | B | | | B | | | E | | | F | | |
| d_I, Intersection Delay [s/veh] | 34.90 | | | | | | | | | | | |
| Intersection LOS | C | | | | | | | | | | | |
| Intersection V/C | 0.779 | | | | | | | | | | | |

## Sequence

| | | | | | | | | | | | | | | | | |
|---|---|---|---|---|---|---|---|---|---|---|---|---|---|---|---|---|
| Ring 1 | 1 | 2 | 3 | 4 | - | - | - | - | - | - | - | - | - | - | - | - |
| Ring 2 | 5 | 6 | 7 | 8 | - | - | - | - | - | - | - | - | - | - | - | - |
| Ring 3 | - | - | - | - | - | - | - | - | - | - | - | - | - | - | - | - |
| Ring 4 | - | - | - | - | - | - | - | - | - | - | - | - | - | - | - | - |

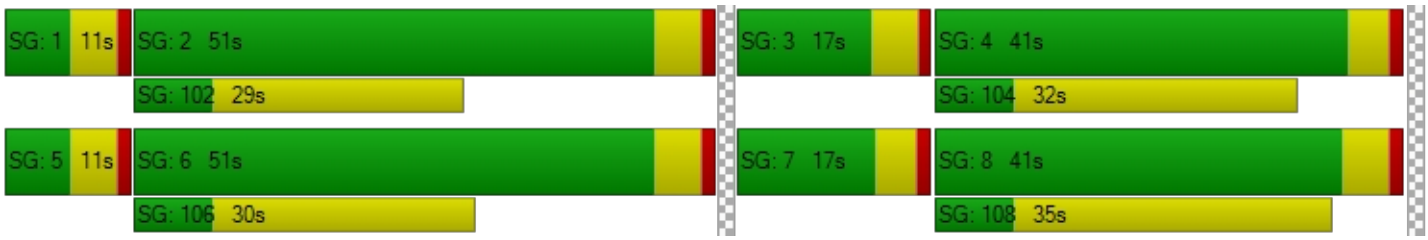

**Intersection Level Of Service Report**
**Intersection 2: Sierra Ave (NS) / Valley Blvd (EW)**

| | | | |
|---|---|---|---|
| Control Type: | Signalized | Delay (sec / veh): | 25.2 |
| Analysis Method: | HCM 2010 | Level Of Service: | C |
| Analysis Period: | 15 minutes | Volume to Capacity (v/c): | 0.754 |

**Intersection Setup**

| Name | Sierra Avenue | | | Sierra Avenue | | | Valley Boulevard | | | Valley Boulevard | | |
|---|---|---|---|---|---|---|---|---|---|---|---|---|
| Approach | Northbound | | | Southbound | | | Eastbound | | | Westbound | | |
| Lane Configuration | | | | | | | | | | | | |
| Turning Movement | Left | Thru | Right | Left | Thru | Right | Left | Thru | Right | Left | Thru | Right |
| Lane Width [ft] | 12.00 | 12.00 | 12.00 | 12.00 | 12.00 | 12.00 | 12.00 | 12.00 | 12.00 | 12.00 | 12.00 | 12.00 |
| No. of Lanes in Pocket | 2 | 0 | 0 | 2 | 0 | 0 | 2 | 0 | 0 | 2 | 0 | 0 |
| Pocket Length [ft] | 370.00 | 100.00 | 100.00 | 165.00 | 100.00 | 100.00 | 260.00 | 100.00 | 100.00 | 355.00 | 100.00 | 100.00 |
| Speed [mph] | 35.00 | | | 35.00 | | | 40.00 | | | 40.00 | | |
| Grade [%] | 0.00 | | | 0.00 | | | 0.00 | | | 0.00 | | |
| Crosswalk | Yes | | | Yes | | | Yes | | | Yes | | |

**volumes**

| Name | Sierra Avenue | | | Sierra Avenue | | | Valley Boulevard | | | Valley Boulevard | | |
|---|---|---|---|---|---|---|---|---|---|---|---|---|
| Base Volume Input [veh/h] | 210 | 1156 | 659 | 36 | 1616 | 124 | 111 | 229 | 304 | 380 | 316 | 75 |
| Base Volume Adjustment Factor | 1.0000 | 1.0000 | 1.0000 | 1.0000 | 1.0000 | 1.0000 | 1.0000 | 1.0000 | 1.0000 | 1.0000 | 1.0000 | 1.0000 |
| Heavy Vehicles Percentage [%] | 2.00 | 2.00 | 2.00 | 2.00 | 2.00 | 2.00 | 4.00 | 4.00 | 4.00 | 4.00 | 4.00 | 4.00 |
| Growth Rate | 1.00 | 1.00 | 1.00 | 1.00 | 1.00 | 1.00 | 1.00 | 1.00 | 1.00 | 1.00 | 1.00 | 1.00 |
| In-Process Volume [veh/h] | 0 | 0 | 0 | 0 | 0 | 0 | 0 | 0 | 0 | 0 | 0 | 0 |
| Site-Generated Trips [veh/h] | 0 | 0 | 0 | 0 | 0 | 0 | 0 | 0 | 0 | 0 | 0 | 0 |
| Diverted Trips [veh/h] | 0 | 0 | 0 | 0 | 0 | 0 | 0 | 0 | 0 | 0 | 0 | 0 |
| Pass-by Trips [veh/h] | 0 | 0 | 0 | 0 | 0 | 0 | 0 | 0 | 0 | 0 | 0 | 0 |
| Existing Site Adjustment Volume [veh/h] | 0 | 0 | 0 | 0 | 0 | 0 | 0 | 0 | 0 | 0 | 0 | 0 |
| Other Volume [veh/h] | 0 | 0 | 0 | 0 | 0 | 0 | 0 | 0 | 0 | 0 | 0 | 0 |
| Right-Turn on Red Volume [veh/h] | 0 | 0 | 0 | 0 | 0 | 0 | 0 | 0 | 0 | 0 | 0 | 0 |
| Total Hourly Volume [veh/h] | 210 | 1156 | 659 | 36 | 1616 | 124 | 111 | 229 | 304 | 380 | 316 | 75 |
| Peak Hour Factor | 0.9720 | 0.9720 | 0.9720 | 0.9720 | 0.9720 | 0.9720 | 0.9720 | 0.9720 | 0.9720 | 0.9720 | 0.9720 | 0.9720 |
| Other Adjustment Factor | 1.0000 | 1.0000 | 1.0000 | 1.0000 | 1.0000 | 1.0000 | 1.0000 | 1.0000 | 1.0000 | 1.0000 | 1.0000 | 1.0000 |
| Total 15-Minute Volume [veh/h] | 54 | 297 | 169 | 9 | 416 | 32 | 29 | 59 | 78 | 98 | 81 | 19 |
| Total Analysis Volume [veh/h] | 216 | 1189 | 678 | 37 | 1663 | 128 | 114 | 236 | 313 | 391 | 325 | 77 |
| Presence of On-Street Parking | No | | No | No | | No | No | | No | No | | No |
| On-Street Parking Maneuver Rate [/h] | 0 | 0 | 0 | 0 | 0 | 0 | 0 | 0 | 0 | 0 | 0 | 0 |
| Local Bus Stopping Rate [/h] | 0 | 0 | 0 | 0 | 0 | 0 | 0 | 0 | 0 | 0 | 0 | 0 |
| Pedestrian Volume [ped/h] | 0 | | | 0 | | | 0 | | | 0 | | |
| Bicycle Volume [bicycles/h] | 0 | | | 0 | | | 0 | | | 0 | | |

**Intersection Settings**

| | |
|---|---|
| Located in CBD | No |
| Signal Coordination Group | 1 - NS - Sierra |
| Cycle Length [s] | 120 |
| Coordination Type | Time of Day Pattern Coordinated |
| Actuation Type | Fully actuated |
| Offset [s] | 10.0 |
| Offset Reference | LagFO |
| Permissive Mode | SingleBand |
| Lost time [s] | 16.00 |

**Phasing & Timing**

| Control Type | Protecte | Permiss | Overlap | Protecte | Permiss | Permiss | Protecte | Permiss | Overlap | Protecte | Permiss | Overlap |
|---|---|---|---|---|---|---|---|---|---|---|---|---|
| Signal group | 5 | 2 | 2 | 1 | 6 | 0 | 3 | 8 | 8 | 7 | 4 | 4 |
| Auxiliary Signal Groups | | | 2,7 | | | | | | 5,8 | | | 1,4 |
| Lead / Lag | Lead | - | - | Lead | - | - | Lead | - | - | Lead | - | - |
| Minimum Green [s] | 5 | 5 | 5 | 5 | 5 | 0 | 5 | 5 | 5 | 5 | 5 | 5 |
| Maximum Green [s] | 30 | 30 | 30 | 30 | 30 | 0 | 30 | 30 | 30 | 30 | 30 | 30 |
| Amber [s] | 4.1 | 4.1 | 4.1 | 4.1 | 4.1 | 0.0 | 4.4 | 4.4 | 4.4 | 4.4 | 4.4 | 4.4 |
| All red [s] | 1.0 | 1.0 | 1.0 | 1.0 | 1.0 | 0.0 | 1.0 | 1.0 | 1.0 | 1.0 | 1.0 | 1.0 |
| Split [s] | 15 | 66 | 66 | 11 | 62 | 0 | 12 | 21 | 21 | 22 | 31 | 31 |
| Vehicle Extension [s] | 3.0 | 3.0 | 3.0 | 3.0 | 3.0 | 0.0 | 3.0 | 3.0 | 3.0 | 3.0 | 3.0 | 3.0 |
| Walk [s] | 0 | 7 | 7 | 0 | 7 | 0 | 0 | 5 | 5 | 0 | 5 | 5 |
| Pedestrian Clearance [s] | 0 | 24 | 24 | 0 | 26 | 0 | 0 | 10 | 10 | 0 | 10 | 10 |
| I1, Start-Up Lost Time [s] | 2.0 | 2.0 | 2.0 | 2.0 | 2.0 | 0.0 | 2.0 | 2.0 | 2.0 | 2.0 | 2.0 | 2.0 |
| I2, Clearance Lost Time [s] | 3.1 | 3.1 | 3.1 | 3.1 | 3.1 | 0.0 | 3.4 | 3.4 | 3.4 | 3.4 | 3.4 | 3.4 |
| Minimum Recall | No | No | No | No | No | | No | No | No | No | No | No |
| Maximum Recall | No | No | No | No | No | | No | No | No | No | No | No |
| Pedestrian Recall | No | No | No | No | No | | No | No | No | No | No | No |
| Detector Location [ft] | 0.0 | 0.0 | 0.0 | 0.0 | 0.0 | 0.0 | 0.0 | 0.0 | 0.0 | 0.0 | 0.0 | 0.0 |
| Detector Length [ft] | 0.0 | 0.0 | 0.0 | 0.0 | 0.0 | 0.0 | 0.0 | 0.0 | 0.0 | 0.0 | 0.0 | 0.0 |
| I, Upstream Filtering Factor | 1.00 | 1.00 | 1.00 | 1.00 | 1.00 | 1.00 | 1.00 | 1.00 | 1.00 | 1.00 | 1.00 | 1.00 |

**Exclusive Pedestrian Phase**

| | |
|---|---|
| Pedestrian Signal Group | 0 |
| Pedestrian Walk [s] | 0 |
| Pedestrian Clearance [s] | 0 |

**Lane Group Calculations**

| Lane Group | L | C | R | L | C | C | L | C | R | L | C | R |
|---|---|---|---|---|---|---|---|---|---|---|---|---|
| L, Total Lost Time per Cycle [s] | 5.10 | 5.10 | 5.40 | 5.10 | 5.10 | 5.10 | 5.40 | 5.40 | 5.10 | 5.40 | 5.40 | 5.10 |
| l1_p, Permitted Start-Up Lost Time [s] | 0.00 | 0.00 | 0.00 | 0.00 | 0.00 | 0.00 | 0.00 | 0.00 | 0.00 | 0.00 | 0.00 | 0.00 |
| l2, Clearance Lost Time [s] | 3.10 | 3.10 | 0.00 | 3.10 | 3.10 | 3.10 | 3.40 | 3.40 | 0.00 | 3.40 | 3.40 | 0.00 |
| g_i, Effective Green Time [s] | 10 | 66 | 87 | 6 | 62 | 62 | 6 | 11 | 27 | 16 | 21 | 33 |
| g / C, Green / Cycle | 0.08 | 0.55 | 0.73 | 0.05 | 0.51 | 0.51 | 0.05 | 0.09 | 0.22 | 0.13 | 0.18 | 0.27 |
| (v / s)_i Volume / Saturation Flow Rate | 0.06 | 0.34 | 0.43 | 0.01 | 0.33 | 0.34 | 0.03 | 0.07 | 0.20 | 0.12 | 0.09 | 0.05 |
| s, saturation flow rate [veh/h] | 3445 | 3547 | 1583 | 3445 | 3547 | 1795 | 3379 | 3478 | 1553 | 3379 | 3478 | 1553 |
| c, Capacity [veh/h] | 288 | 1946 | 1148 | 166 | 1820 | 921 | 169 | 328 | 346 | 453 | 620 | 422 |
| d1, Uniform Delay [s] | 52.15 | 9.91 | 0.61 | 54.08 | 12.87 | 12.88 | 55.11 | 51.01 | 41.00 | 48.25 | 41.36 | 29.22 |
| k, delay calibration | 0.11 | 0.50 | 0.50 | 0.11 | 0.50 | 0.50 | 0.11 | 0.11 | 0.50 | 0.11 | 0.11 | 0.24 |
| I, Upstream Filtering Factor | 1.00 | 1.00 | 1.00 | 1.00 | 1.00 | 1.00 | 1.00 | 1.00 | 1.00 | 1.00 | 1.00 | 1.00 |
| d2, Incremental Delay [s] | 3.89 | 1.44 | 2.23 | 0.67 | 1.84 | 3.61 | 4.59 | 2.98 | 29.30 | 4.97 | 0.69 | 0.45 |
| d3, Initial Queue Delay [s] | 0.00 | 0.00 | 0.00 | 0.00 | 0.00 | 0.00 | 0.00 | 0.00 | 0.00 | 0.00 | 0.00 | 0.00 |
| Rp, platoon ratio | 1.33 | 1.33 | 1.33 | 1.33 | 1.33 | 1.33 | 1.33 | 1.33 | 1.33 | 1.33 | 1.33 | 1.33 |
| PF, progression factor | 1.00 | 1.00 | 1.00 | 1.00 | 1.00 | 1.00 | 1.00 | 1.00 | 1.00 | 1.00 | 1.00 | 1.00 |

**Lane Group Results**

| | | | | | | | | | | | | |
|---|---|---|---|---|---|---|---|---|---|---|---|---|
| X, volume / capacity | 0.75 | 0.61 | 0.59 | 0.22 | 0.65 | 0.65 | 0.67 | 0.72 | 0.90 | 0.86 | 0.52 | 0.18 |
| d, Delay for Lane Group [s/veh] | 56.05 | 11.35 | 2.84 | 54.75 | 14.71 | 16.50 | 59.70 | 54.00 | 70.30 | 53.22 | 42.05 | 29.67 |
| Lane Group LOS | E | B | A | D | B | B | E | D | E | D | D | C |
| Critical Lane Group | Yes | No | No | No | No | Yes | No | No | Yes | Yes | No | No |
| 50th-Percentile Queue Length [veh] | 3.22 | 5.64 | 1.22 | 0.54 | 7.29 | 7.86 | 1.75 | 3.41 | 10.77 | 5.64 | 4.03 | 1.53 |
| 50th-Percentile Queue Length [ft] | 80.49 | 140.95 | 30.50 | 13.56 | 182.16 | 196.52 | 43.79 | 85.28 | 269.16 | 140.90 | 100.72 | 38.28 |
| 95th-Percentile Queue Length [veh] | 5.80 | 9.53 | 2.20 | 0.98 | 11.71 | 12.46 | 3.15 | 6.14 | 16.15 | 9.53 | 7.25 | 2.76 |
| 95th-Percentile Queue Length [ft] | 144.89 | 238.30 | 54.90 | 24.41 | 292.83 | 311.47 | 78.82 | 153.50 | 403.69 | 238.23 | 181.30 | 68.91 |

**Movement, Approach, & Intersection Results**

| | | | | | | | | | | | | |
|---|---|---|---|---|---|---|---|---|---|---|---|---|
| d_M, Delay for Movement [s/veh] | 56.05 | 11.35 | 2.84 | 54.75 | 15.22 | 16.50 | 59.70 | 54.00 | 70.30 | 53.22 | 42.05 | 29.67 |
| Movement LOS | E | B | A | D | B | B | E | D | E | D | D | C |
| d_A, Approach Delay [s/veh] | 13.22 | | | 16.11 | | | 62.68 | | | 46.35 | | |
| Approach LOS | B | | | B | | | E | | | D | | |
| d_I, Intersection Delay [s/veh] | 25.21 | | | | | | | | | | | |
| Intersection LOS | C | | | | | | | | | | | |
| Intersection V/C | 0.754 | | | | | | | | | | | |

## Sequence

| | | | | | | | | | | | | | | | | |
|---|---|---|---|---|---|---|---|---|---|---|---|---|---|---|---|---|
| Ring 1 | 1 | 2 | 3 | 4 | - | - | - | - | - | - | - | - | - | - | - | - |
| Ring 2 | 5 | 6 | 7 | 8 | - | - | - | - | - | - | - | - | - | - | - | - |
| Ring 3 | - | - | - | - | - | - | - | - | - | - | - | - | - | - | - | - |
| Ring 4 | - | - | - | - | - | - | - | - | - | - | - | - | - | - | - | - |

**Intersection Level Of Service Report**
**Intersection 3: Sierra Ave (NS) / I-10 Ramps (EW)**

| | | | |
|---|---|---|---|
| Control Type: | Signalized | Delay (sec / veh): | 31.8 |
| Analysis Method: | HCM 2010 | Level Of Service: | C |
| Analysis Period: | 15 minutes | Volume to Capacity (v/c): | 0.788 |

**Intersection Setup**

| Name | Sierra Avenue | | | Sierra Avenue | | | I-10 Ramps | | | | | |
|---|---|---|---|---|---|---|---|---|---|---|---|---|
| Approach | Northbound | | | Southbound | | | Eastbound | | | Westbound | | |
| Lane Configuration | | | | | | | | | | | | |
| Turning Movement | Left | Thru | Right | Left | Thru | Right | Left | Thru | Right | Left | Thru | Right |
| Lane Width [ft] | 12.00 | 12.00 | 12.00 | 12.00 | 12.00 | 12.00 | 12.00 | 12.00 | 12.00 | 12.00 | 12.00 | 12.00 |
| No. of Lanes in Pocket | 2 | 0 | 0 | 2 | 0 | 0 | 1 | 0 | 0 | 0 | 0 | 1 |
| Pocket Length [ft] | 540.00 | 100.00 | 100.00 | 295.00 | 100.00 | 100.00 | 430.00 | 100.00 | 100.00 | 100.00 | 100.00 | 520.00 |
| Speed [mph] | 40.00 | | | 35.00 | | | 30.00 | | | 30.00 | | |
| Grade [%] | 0.00 | | | 0.00 | | | 0.00 | | | 0.00 | | |
| Crosswalk | No | | | No | | | Yes | | | Yes | | |

**volumes**

| Name | Sierra Avenue | | | Sierra Avenue | | | I-10 Ramps | | | | | |
|---|---|---|---|---|---|---|---|---|---|---|---|---|
| Base Volume Input [veh/h] | 247 | 581 | 500 | 762 | 798 | 715 | 781 | 0 | 387 | 583 | 0 | 608 |
| Base Volume Adjustment Factor | 1.0000 | 1.0000 | 1.0000 | 1.0000 | 1.0000 | 1.0000 | 1.0000 | 1.0000 | 1.0000 | 1.0000 | 1.0000 | 1.0000 |
| Heavy Vehicles Percentage [%] | 2.00 | 2.00 | 2.00 | 2.00 | 2.00 | 2.00 | 2.00 | 2.00 | 2.00 | 2.00 | 2.00 | 2.00 |
| Growth Rate | 1.00 | 1.00 | 1.00 | 1.00 | 1.00 | 1.00 | 1.00 | 1.00 | 1.00 | 1.00 | 1.00 | 1.00 |
| In-Process Volume [veh/h] | 0 | 0 | 0 | 0 | 0 | 0 | 0 | 0 | 0 | 0 | 0 | 0 |
| Site-Generated Trips [veh/h] | 0 | 0 | 0 | 0 | 0 | 0 | 0 | 0 | 0 | 0 | 0 | 0 |
| Diverted Trips [veh/h] | 0 | 0 | 0 | 0 | 0 | 0 | 0 | 0 | 0 | 0 | 0 | 0 |
| Pass-by Trips [veh/h] | 0 | 0 | 0 | 0 | 0 | 0 | 0 | 0 | 0 | 0 | 0 | 0 |
| Existing Site Adjustment Volume [veh/h] | 0 | 0 | 0 | 0 | 0 | 0 | 0 | 0 | 0 | 0 | 0 | 0 |
| Other Volume [veh/h] | 0 | 0 | 0 | 0 | 0 | 0 | 0 | 0 | 0 | 0 | 0 | 0 |
| Right-Turn on Red Volume [veh/h] | 0 | 0 | 0 | 0 | 0 | 0 | 0 | 0 | 0 | 0 | 0 | 0 |
| Total Hourly Volume [veh/h] | 247 | 581 | 500 | 762 | 798 | 715 | 781 | 0 | 387 | 583 | 0 | 608 |
| Peak Hour Factor | 0.9830 | 0.9830 | 0.9830 | 0.9830 | 0.9830 | 0.9830 | 0.9830 | 1.0000 | 0.9830 | 0.9830 | 1.0000 | 0.9830 |
| Other Adjustment Factor | 1.0000 | 1.0000 | 1.0000 | 1.0000 | 1.0000 | 1.0000 | 1.0000 | 1.0000 | 1.0000 | 1.0000 | 1.0000 | 1.0000 |
| Total 15-Minute Volume [veh/h] | 63 | 148 | 127 | 194 | 203 | 182 | 199 | 0 | 98 | 148 | 0 | 155 |
| Total Analysis Volume [veh/h] | 251 | 591 | 509 | 775 | 812 | 727 | 795 | 0 | 394 | 593 | 0 | 619 |
| Presence of On-Street Parking | No | | No | No | | No | No | | No | No | | No |
| On-Street Parking Maneuver Rate [/h] | 0 | 0 | 0 | 0 | 0 | 0 | 0 | 0 | 0 | 0 | 0 | 0 |
| Local Bus Stopping Rate [/h] | 0 | 0 | 0 | 0 | 0 | 0 | 0 | 0 | 0 | 0 | 0 | 0 |
| Pedestrian Volume [ped/h] | 0 | | | 0 | | | 0 | | | 0 | | |
| Bicycle Volume [bicycles/h] | 0 | | | 0 | | | 0 | | | 0 | | |

**Intersection Settings**

| | |
|---|---|
| Located in CBD | No |
| Signal Coordination Group | 1 - NS - Sierra |
| Cycle Length [s] | 120 |
| Coordination Type | Time of Day Pattern Coordinated |
| Actuation Type | Fully actuated |
| Offset [s] | 31.0 |
| Offset Reference | LagFO |
| Permissive Mode | SingleBand |
| Lost time [s] | 12.00 |

**Phasing & Timing**

| Control Type | Permiss | Permiss | Overlap | Permiss | Permiss | Overlap | Permiss | Permiss | Overlap | Permiss | Permiss | Overlap |
|---|---|---|---|---|---|---|---|---|---|---|---|---|
| Signal group | 2 | 2 | 2 | 6 | 6 | 6 | 3 | 0 | 3 | 7 | 0 | 7 |
| Auxiliary Signal Groups | | | 2,3,6,7 | | | 2,3,6,7 | | | 2,3,6 | | | 2,6,7 |
| Lead / Lag | Lag | - | - | Lag | - | - | Lead | - | - | Lead | - | - |
| Minimum Green [s] | 5 | 5 | 5 | 5 | 5 | 5 | 5 | 0 | 5 | 5 | 0 | 5 |
| Maximum Green [s] | 30 | 30 | 30 | 30 | 30 | 30 | 30 | 0 | 30 | 30 | 0 | 30 |
| Amber [s] | 4.4 | 4.4 | 4.4 | 4.1 | 4.1 | 4.1 | 3.7 | 0.0 | 3.7 | 3.7 | 0.0 | 3.7 |
| All red [s] | 3.0 | 3.0 | 3.0 | 3.0 | 3.0 | 3.0 | 3.0 | 0.0 | 3.0 | 3.0 | 0.0 | 3.0 |
| Split [s] | 30 | 30 | 30 | 48 | 48 | 48 | 42 | 0 | 42 | 42 | 0 | 42 |
| Vehicle Extension [s] | 3.0 | 3.0 | 3.0 | 3.0 | 3.0 | 3.0 | 3.0 | 0.0 | 3.0 | 3.0 | 0.0 | 3.0 |
| Walk [s] | 7 | 7 | 7 | 7 | 7 | 7 | 7 | 0 | 7 | 7 | 0 | 7 |
| Pedestrian Clearance [s] | 15 | 15 | 15 | 15 | 15 | 15 | 15 | 0 | 15 | 15 | 0 | 15 |
| I1, Start-Up Lost Time [s] | 2.0 | 2.0 | 2.0 | 2.0 | 2.0 | 2.0 | 2.0 | 0.0 | 2.0 | 2.0 | 0.0 | 2.0 |
| I2, Clearance Lost Time [s] | 5.4 | 5.4 | 5.4 | 5.1 | 5.1 | 5.1 | 4.7 | 0.0 | 4.7 | 4.7 | 0.0 | 4.7 |
| Minimum Recall | | No | No | | No | No | No | | No | No | | No |
| Maximum Recall | | No | No | | No | No | No | | No | No | | No |
| Pedestrian Recall | | No | No | | No | No | No | | No | No | | No |
| Detector Location [ft] | 0.0 | 0.0 | 0.0 | 0.0 | 0.0 | 0.0 | 0.0 | 0.0 | 0.0 | 0.0 | 0.0 | 0.0 |
| Detector Length [ft] | 0.0 | 0.0 | 0.0 | 0.0 | 0.0 | 0.0 | 0.0 | 0.0 | 0.0 | 0.0 | 0.0 | 0.0 |
| I, Upstream Filtering Factor | 1.00 | 1.00 | 1.00 | 1.00 | 1.00 | 1.00 | 1.00 | 1.00 | 1.00 | 1.00 | 1.00 | 1.00 |

**Exclusive Pedestrian Phase**

| | |
|---|---|
| Pedestrian Signal Group | 0 |
| Pedestrian Walk [s] | 0 |
| Pedestrian Clearance [s] | 0 |

**Lane Group Calculations**

| Lane Group | L | C | R | L | C | R | L | R | L | R |
|---|---|---|---|---|---|---|---|---|---|---|
| L, Total Lost Time per Cycle [s] | 7.40 | 7.40 | 7.10 | 7.10 | 7.10 | 7.10 | 6.70 | 7.10 | 6.70 | 7.10 |
| l1_p, Permitted Start-Up Lost Time [s] | 2.00 | 0.00 | 0.00 | 2.00 | 0.00 | 0.00 | 2.00 | 0.00 | 2.00 | 0.00 |
| l2, Clearance Lost Time [s] | 5.40 | 5.40 | 0.00 | 5.10 | 5.10 | 0.00 | 4.70 | 5.40 | 4.70 | 0.00 |
| g_i, Effective Green Time [s] | 32 | 32 | 141 | 32 | 32 | 141 | 35 | 144 | 35 | 105 |
| g / C, Green / Cycle | 0.26 | 0.26 | 1.17 | 0.27 | 0.27 | 1.17 | 0.29 | 1.20 | 0.29 | 0.88 |
| (v / s)_i Volume / Saturation Flow Rate | 0.09 | 0.12 | 0.32 | 0.28 | 0.16 | 0.46 | 0.29 | 0.25 | 0.22 | 0.39 |
| s, saturation flow rate [veh/h] | 2741 | 5074 | 1583 | 2741 | 5074 | 1583 | 2741 | 1583 | 2741 | 1583 |
| c, Capacity [veh/h] | 729 | 1337 | 1856 | 744 | 1350 | 1856 | 813 | 1907 | 813 | 1392 |
| d1, Uniform Delay [s] | 32.99 | 32.07 | 0.00 | 40.83 | 33.43 | 0.00 | 44.31 | 0.00 | 40.20 | 0.72 |
| k, delay calibration | 0.50 | 0.50 | 0.50 | 0.50 | 0.50 | 0.50 | 0.11 | 0.50 | 0.11 | 0.50 |
| I, Upstream Filtering Factor | 1.00 | 1.00 | 1.00 | 1.00 | 1.00 | 1.00 | 1.00 | 1.00 | 1.00 | 1.00 |
| d2, Incremental Delay [s] | 1.29 | 1.06 | 0.37 | 44.43 | 1.99 | 0.62 | 10.42 | 0.25 | 1.28 | 1.03 |
| d3, Initial Queue Delay [s] | 0.00 | 0.00 | 0.00 | 0.00 | 0.00 | 0.00 | 0.00 | 0.00 | 0.00 | 0.00 |
| Rp, platoon ratio | 1.33 | 1.33 | 1.01 | 1.33 | 1.33 | 1.01 | 1.00 | 1.00 | 1.00 | 1.00 |
| PF, progression factor | 1.00 | 1.00 | 1.00 | 1.00 | 1.00 | 1.00 | 1.00 | 1.00 | 1.00 | 1.00 |

**Lane Group Results**

| | | | | | | | | | | |
|---|---|---|---|---|---|---|---|---|---|---|
| X, volume / capacity | 0.34 | 0.44 | 0.27 | 1.04 | 0.60 | 0.39 | 0.98 | 0.21 | 0.73 | 0.44 |
| d, Delay for Lane Group [s/veh] | 34.28 | 33.13 | 0.37 | 85.27 | 35.42 | 0.62 | 54.72 | 0.25 | 41.48 | 1.75 |
| Lane Group LOS | C | C | A | F | D | A | D | A | D | A |
| Critical Lane Group | No | No | No | Yes | No | No | Yes | Yes | No | No |
| 50th-Percentile Queue Length [veh] | 2.76 | 4.23 | 0.19 | 15.12 | 6.22 | 0.32 | 13.08 | 0.13 | 8.19 | 0.40 |
| 50th-Percentile Queue Length [ft] | 68.91 | 105.69 | 4.72 | 378.11 | 155.41 | 8.03 | 326.91 | 3.25 | 204.66 | 9.97 |
| 95th-Percentile Queue Length [veh] | 4.96 | 7.60 | 0.34 | 22.03 | 10.31 | 0.58 | 19.01 | 0.23 | 12.88 | 0.72 |
| 95th-Percentile Queue Length [ft] | 124.04 | 189.99 | 8.49 | 550.85 | 257.63 | 14.45 | 475.17 | 5.86 | 321.97 | 17.95 |

**Movement, Approach, & Intersection Results**

| | | | | | | | | | | | | |
|---|---|---|---|---|---|---|---|---|---|---|---|---|
| d_M, Delay for Movement [s/veh] | 34.28 | 33.13 | 0.37 | 85.27 | 35.42 | 0.62 | 54.72 | 0.00 | 0.25 | 41.48 | 0.00 | 1.75 |
| Movement LOS | C | C | A | F | D | A | D | | A | D | | A |
| d_A, Approach Delay [s/veh] | 21.00 | | | 41.18 | | | 36.67 | | | 21.19 | | |
| Approach LOS | C | | | D | | | D | | | C | | |
| d_I, Intersection Delay [s/veh] | 31.81 | | | | | | | | | | | |
| Intersection LOS | C | | | | | | | | | | | |
| Intersection V/C | 0.788 | | | | | | | | | | | |

## Sequence

| | | | | | | | | | | | | | | | | |
|---|---|---|---|---|---|---|---|---|---|---|---|---|---|---|---|---|
| Ring 1 | 2 | 6 | 3 | - | - | - | - | - | - | - | - | - | - | - | - | - |
| Ring 2 | - | - | 7 | - | - | - | - | - | - | - | - | - | - | - | - | - |
| Ring 3 | - | - | - | - | - | - | - | - | - | - | - | - | - | - | - | - |
| Ring 4 | - | - | - | - | - | - | - | - | - | - | - | - | - | - | - | - |

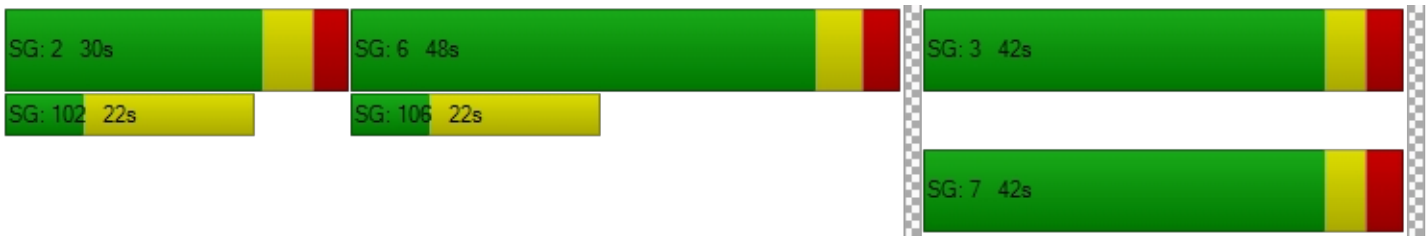

**Intersection Level Of Service Report**
**Intersection 4: Sierra Ave (NS) / Slover Ave (EW)**

| | | | |
|---|---|---|---|
| Control Type: | Signalized | Delay (sec / veh): | 30.6 |
| Analysis Method: | HCM 2010 | Level Of Service: | C |
| Analysis Period: | 15 minutes | Volume to Capacity (v/c): | 0.560 |

**Intersection Setup**

| Name | Sierra Avenue | | | Sierra Avenue | | | Slover Avenue | | | Slover Avenue | | |
|---|---|---|---|---|---|---|---|---|---|---|---|---|
| Approach | Northbound | | | Southbound | | | Eastbound | | | Westbound | | |
| Lane Configuration | | | | | | | | | | | | |
| Turning Movement | Left | Thru | Right | Left | Thru | Right | Left | Thru | Right | Left | Thru | Right |
| Lane Width [ft] | 12.00 | 12.00 | 12.00 | 12.00 | 12.00 | 12.00 | 12.00 | 12.00 | 12.00 | 12.00 | 12.00 | 12.00 |
| No. of Lanes in Pocket | 2 | 0 | 0 | 2 | 0 | 0 | 2 | 0 | 1 | 2 | 0 | 1 |
| Pocket Length [ft] | 195.00 | 100.00 | 100.00 | 615.00 | 100.00 | 100.00 | 290.00 | 100.00 | 290.00 | 230.00 | 100.00 | 300.00 |
| Speed [mph] | 50.00 | | | 40.00 | | | 45.00 | | | 45.00 | | |
| Grade [%] | 0.00 | | | 0.00 | | | 0.00 | | | 0.00 | | |
| Crosswalk | Yes | | | Yes | | | Yes | | | Yes | | |

**volumes**

| Name | Sierra Avenue | | | Sierra Avenue | | | Slover Avenue | | | Slover Avenue | | |
|---|---|---|---|---|---|---|---|---|---|---|---|---|
| Base Volume Input [veh/h] | 160 | 877 | 150 | 464 | 929 | 276 | 272 | 285 | 112 | 111 | 279 | 270 |
| Base Volume Adjustment Factor | 1.0000 | 1.0000 | 1.0000 | 1.0000 | 1.0000 | 1.0000 | 1.0000 | 1.0000 | 1.0000 | 1.0000 | 1.0000 | 1.0000 |
| Heavy Vehicles Percentage [%] | 2.00 | 2.00 | 2.00 | 2.00 | 2.00 | 2.00 | 2.00 | 2.00 | 2.00 | 2.00 | 2.00 | 2.00 |
| Growth Rate | 1.00 | 1.00 | 1.00 | 1.00 | 1.00 | 1.00 | 1.00 | 1.00 | 1.00 | 1.00 | 1.00 | 1.00 |
| In-Process Volume [veh/h] | 0 | 0 | 0 | 0 | 0 | 0 | 0 | 0 | 0 | 0 | 0 | 0 |
| Site-Generated Trips [veh/h] | 0 | 0 | 0 | 0 | 0 | 0 | 0 | 0 | 0 | 0 | 0 | 0 |
| Diverted Trips [veh/h] | 0 | 0 | 0 | 0 | 0 | 0 | 0 | 0 | 0 | 0 | 0 | 0 |
| Pass-by Trips [veh/h] | 0 | 0 | 0 | 0 | 0 | 0 | 0 | 0 | 0 | 0 | 0 | 0 |
| Existing Site Adjustment Volume [veh/h] | 0 | 0 | 0 | 0 | 0 | 0 | 0 | 0 | 0 | 0 | 0 | 0 |
| Other Volume [veh/h] | 0 | 0 | 0 | 0 | 0 | 0 | 0 | 0 | 0 | 0 | 0 | 0 |
| Right-Turn on Red Volume [veh/h] | 0 | 0 | 0 | 0 | 0 | 0 | 0 | 0 | 0 | 0 | 0 | 0 |
| Total Hourly Volume [veh/h] | 160 | 877 | 150 | 464 | 929 | 276 | 272 | 285 | 112 | 111 | 279 | 270 |
| Peak Hour Factor | 0.9580 | 0.9580 | 0.9580 | 0.9580 | 0.9580 | 0.9580 | 0.9580 | 0.9580 | 0.9580 | 0.9580 | 0.9580 | 0.9580 |
| Other Adjustment Factor | 1.0000 | 1.0000 | 1.0000 | 1.0000 | 1.0000 | 1.0000 | 1.0000 | 1.0000 | 1.0000 | 1.0000 | 1.0000 | 1.0000 |
| Total 15-Minute Volume [veh/h] | 42 | 229 | 39 | 121 | 242 | 72 | 71 | 74 | 29 | 29 | 73 | 70 |
| Total Analysis Volume [veh/h] | 167 | 915 | 157 | 484 | 970 | 288 | 284 | 297 | 117 | 116 | 291 | 282 |
| Presence of On-Street Parking | No | | No | No | | No | No | | No | No | | No |
| On-Street Parking Maneuver Rate [/h] | 0 | 0 | 0 | 0 | 0 | 0 | 0 | 0 | 0 | 0 | 0 | 0 |
| Local Bus Stopping Rate [/h] | 0 | 0 | 0 | 0 | 0 | 0 | 0 | 0 | 0 | 0 | 0 | 0 |
| Pedestrian Volume [ped/h] | 0 | | | 0 | | | 0 | | | 0 | | |
| Bicycle Volume [bicycles/h] | 0 | | | 0 | | | 0 | | | 0 | | |

**Intersection Settings**

| | |
|---|---|
| Located in CBD | No |
| Signal Coordination Group | 1 - NS - Sierra |
| Cycle Length [s] | 120 |
| Coordination Type | Time of Day Pattern Coordinated |
| Actuation Type | Fully actuated |
| Offset [s] | 77.0 |
| Offset Reference | LagFO |
| Permissive Mode | SingleBand |
| Lost time [s] | 16.00 |

**Phasing & Timing**

| Control Type | Protecte | Permiss | Permiss | Protecte | Permiss | Permiss | Protecte | Permiss | Permiss | Protecte | Permiss | Overlap |
|---|---|---|---|---|---|---|---|---|---|---|---|---|
| Signal group | 5 | 2 | 0 | 1 | 6 | 0 | 3 | 8 | 0 | 7 | 4 | 4 |
| Auxiliary Signal Groups | | | | | | | | | | | | 1,4 |
| Lead / Lag | Lead | - | - | Lead | - | - | Lead | - | - | Lead | - | - |
| Minimum Green [s] | 5 | 5 | 0 | 5 | 5 | 0 | 5 | 5 | 0 | 5 | 5 | 5 |
| Maximum Green [s] | 30 | 30 | 0 | 30 | 30 | 0 | 30 | 30 | 0 | 30 | 30 | 30 |
| Amber [s] | 5.2 | 5.2 | 0.0 | 4.4 | 4.4 | 0.0 | 4.8 | 4.8 | 0.0 | 4.8 | 4.8 | 4.8 |
| All red [s] | 1.0 | 1.0 | 0.0 | 1.0 | 1.0 | 0.0 | 1.0 | 1.0 | 0.0 | 1.0 | 1.0 | 1.0 |
| Split [s] | 15 | 47 | 0 | 31 | 63 | 0 | 20 | 29 | 0 | 13 | 22 | 22 |
| Vehicle Extension [s] | 3.0 | 3.0 | 0.0 | 3.0 | 3.0 | 0.0 | 3.0 | 3.0 | 0.0 | 3.0 | 3.0 | 3.0 |
| Walk [s] | 0 | 7 | 0 | 0 | 7 | 0 | 0 | 5 | 0 | 0 | 5 | 5 |
| Pedestrian Clearance [s] | 0 | 22 | 0 | 0 | 20 | 0 | 0 | 10 | 0 | 0 | 10 | 10 |
| I1, Start-Up Lost Time [s] | 2.0 | 2.0 | 0.0 | 2.0 | 2.0 | 0.0 | 2.0 | 2.0 | 0.0 | 2.0 | 2.0 | 2.0 |
| I2, Clearance Lost Time [s] | 4.2 | 4.2 | 0.0 | 3.4 | 3.4 | 0.0 | 3.8 | 3.8 | 0.0 | 3.8 | 3.8 | 3.8 |
| Minimum Recall | No | No | | No | No | | No | No | | No | No | No |
| Maximum Recall | No | No | | No | No | | No | No | | No | No | No |
| Pedestrian Recall | No | No | | No | No | | No | No | | No | No | No |
| Detector Location [ft] | 0.0 | 0.0 | 0.0 | 0.0 | 0.0 | 0.0 | 0.0 | 0.0 | 0.0 | 0.0 | 0.0 | 0.0 |
| Detector Length [ft] | 0.0 | 0.0 | 0.0 | 0.0 | 0.0 | 0.0 | 0.0 | 0.0 | 0.0 | 0.0 | 0.0 | 0.0 |
| I, Upstream Filtering Factor | 1.00 | 1.00 | 1.00 | 1.00 | 1.00 | 1.00 | 1.00 | 1.00 | 1.00 | 1.00 | 1.00 | 1.00 |

**Exclusive Pedestrian Phase**

| | |
|---|---|
| Pedestrian Signal Group | 0 |
| Pedestrian Walk [s] | 0 |
| Pedestrian Clearance [s] | 0 |

**Lane Group Calculations**

| Lane Group | L | C | R | L | C | C | L | C | R | L | C | R |
|---|---|---|---|---|---|---|---|---|---|---|---|---|
| L, Total Lost Time per Cycle [s] | 6.20 | 6.20 | 6.20 | 5.40 | 5.40 | 5.40 | 5.80 | 5.80 | 5.80 | 5.80 | 5.80 | 5.40 |
| l1_p, Permitted Start-Up Lost Time [s] | 0.00 | 0.00 | 0.00 | 0.00 | 0.00 | 0.00 | 0.00 | 0.00 | 0.00 | 0.00 | 0.00 | 0.00 |
| l2, Clearance Lost Time [s] | 4.20 | 4.20 | 4.20 | 3.40 | 3.40 | 3.40 | 3.80 | 3.80 | 3.80 | 3.80 | 3.80 | 0.00 |
| g_i, Effective Green Time [s] | 8 | 53 | 53 | 20 | 65 | 65 | 12 | 19 | 19 | 6 | 12 | 38 |
| g / C, Green / Cycle | 0.06 | 0.44 | 0.44 | 0.16 | 0.54 | 0.54 | 0.10 | 0.15 | 0.15 | 0.05 | 0.10 | 0.32 |
| (v / s)_i Volume / Saturation Flow Rate | 0.05 | 0.18 | 0.10 | 0.14 | 0.24 | 0.24 | 0.08 | 0.08 | 0.07 | 0.03 | 0.08 | 0.10 |
| s, saturation flow rate [veh/h] | 3445 | 5074 | 1583 | 3445 | 3547 | 1653 | 3445 | 3547 | 1583 | 3445 | 3547 | 2802 |
| c, Capacity [veh/h] | 225 | 2221 | 693 | 568 | 1905 | 888 | 346 | 546 | 244 | 174 | 369 | 889 |
| d1, Uniform Delay [s] | 53.85 | 16.54 | 15.26 | 45.48 | 9.62 | 9.63 | 52.99 | 46.95 | 46.45 | 56.06 | 52.56 | 31.16 |
| k, delay calibration | 0.11 | 0.50 | 0.50 | 0.11 | 0.50 | 0.50 | 0.11 | 0.11 | 0.11 | 0.11 | 0.11 | 0.11 |
| I, Upstream Filtering Factor | 1.00 | 1.00 | 1.00 | 1.00 | 1.00 | 1.00 | 1.00 | 1.00 | 1.00 | 1.00 | 1.00 | 1.00 |
| d2, Incremental Delay [s] | 4.74 | 0.57 | 0.76 | 3.74 | 0.77 | 1.66 | 4.85 | 0.85 | 1.47 | 4.35 | 3.80 | 0.20 |
| d3, Initial Queue Delay [s] | 0.00 | 0.00 | 0.00 | 0.00 | 0.00 | 0.00 | 0.00 | 0.00 | 0.00 | 0.00 | 0.00 | 0.00 |
| Rp, platoon ratio | 1.33 | 1.33 | 1.33 | 1.33 | 1.33 | 1.33 | 1.00 | 1.00 | 1.00 | 1.00 | 1.00 | 1.00 |
| PF, progression factor | 1.00 | 1.00 | 1.00 | 1.00 | 1.00 | 1.00 | 1.00 | 1.00 | 1.00 | 1.00 | 1.00 | 1.00 |

**Lane Group Results**

| | | | | | | | | | | | | |
|---|---|---|---|---|---|---|---|---|---|---|---|---|
| X, volume / capacity | 0.74 | 0.41 | 0.23 | 0.85 | 0.45 | 0.45 | 0.82 | 0.54 | 0.48 | 0.67 | 0.79 | 0.32 |
| d, Delay for Lane Group [s/veh] | 58.59 | 17.11 | 16.02 | 49.21 | 10.39 | 11.29 | 57.84 | 47.80 | 47.92 | 60.41 | 56.36 | 31.37 |
| Lane Group LOS | E | B | B | D | B | B | E | D | D | E | E | C |
| Critical Lane Group | No | Yes | No | Yes | No | No | Yes | No | No | No | No | Yes |
| 50th-Percentile Queue Length [veh] | 2.49 | 4.01 | 2.02 | 6.72 | 3.91 | 3.89 | 4.33 | 4.06 | 3.21 | 1.79 | 4.37 | 3.04 |
| 50th-Percentile Queue Length [ft] | 62.37 | 100.16 | 50.47 | 168.10 | 97.87 | 97.15 | 108.21 | 101.49 | 80.34 | 44.84 | 109.18 | 75.98 |
| 95th-Percentile Queue Length [veh] | 4.49 | 7.21 | 3.63 | 10.98 | 7.05 | 6.99 | 7.74 | 7.31 | 5.78 | 3.23 | 7.79 | 5.47 |
| 95th-Percentile Queue Length [ft] | 112.27 | 180.28 | 90.84 | 274.42 | 176.16 | 174.87 | 193.51 | 182.68 | 144.61 | 80.71 | 194.86 | 136.76 |

**Movement, Approach, & Intersection Results**

| | | | | | | | | | | | | |
|---|---|---|---|---|---|---|---|---|---|---|---|---|
| d_M, Delay for Movement [s/veh] | 58.59 | 17.11 | 16.02 | 49.21 | 10.49 | 11.29 | 57.84 | 47.80 | 47.92 | 60.41 | 56.36 | 31.37 |
| Movement LOS | E | B | B | D | B | B | E | D | D | E | E | C |
| d_A, Approach Delay [s/veh] | 22.56 | | | 21.38 | | | 51.91 | | | 46.81 | | |
| Approach LOS | C | | | C | | | D | | | D | | |
| d_I, Intersection Delay [s/veh] | 30.61 | | | | | | | | | | | |
| Intersection LOS | C | | | | | | | | | | | |
| Intersection V/C | 0.560 | | | | | | | | | | | |

## Sequence

| | | | | | | | | | | | | | | | | |
|---|---|---|---|---|---|---|---|---|---|---|---|---|---|---|---|---|
| Ring 1 | 1 | 2 | 3 | 4 | - | - | - | - | - | - | - | - | - | - | - | - |
| Ring 2 | 5 | 6 | 7 | 8 | - | - | - | - | - | - | - | - | - | - | - | - |
| Ring 3 | - | - | - | - | - | - | - | - | - | - | - | - | - | - | - | - |
| Ring 4 | - | - | - | - | - | - | - | - | - | - | - | - | - | - | - | - |

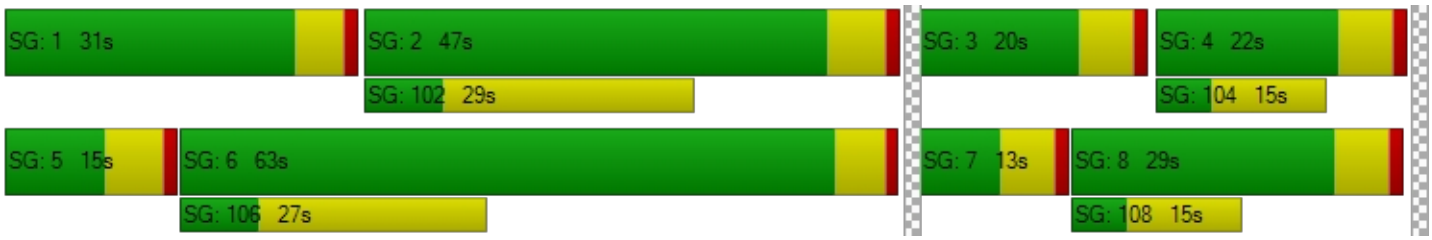

**Intersection Level Of Service Report**
**Intersection 5: Palmetto Ave (NS) / Valley Blvd (EW)**

| | | | |
|---|---|---|---|
| Control Type: | Signalized | Delay (sec / veh): | 31.0 |
| Analysis Method: | HCM 2010 | Level Of Service: | C |
| Analysis Period: | 15 minutes | Volume to Capacity (v/c): | 0.408 |

**Intersection Setup**

| Name | Palmetto Avenue | | Valley Boulevard | | Valley Boulevard | |
|---|---|---|---|---|---|---|
| Approach | Southbound | | Eastbound | | Westbound | |
| Lane Configuration | | | | | | |
| Turning Movement | Left | Right | Left | Thru | Thru | Right |
| Lane Width [ft] | 12.00 | 12.00 | 12.00 | 12.00 | 12.00 | 12.00 |
| No. of Lanes in Pocket | 0 | 0 | 1 | 0 | 0 | 0 |
| Pocket Length [ft] | 100.00 | 100.00 | 150.00 | 100.00 | 100.00 | 100.00 |
| Speed [mph] | 35.00 | | 40.00 | | 40.00 | |
| Grade [%] | 0.00 | | 0.00 | | 0.00 | |
| Crosswalk | Yes | | Yes | | No | |

**volumes**

| Name | Palmetto Avenue | | Valley Boulevard | | Valley Boulevard | |
|---|---|---|---|---|---|---|
| Base Volume Input [veh/h] | 48 | 250 | 130 | 61 | 331 | 72 |
| Base Volume Adjustment Factor | 1.0000 | 1.0000 | 1.0000 | 1.0000 | 1.0000 | 1.0000 |
| Heavy Vehicles Percentage [%] | 2.00 | 2.00 | 4.00 | 4.00 | 4.00 | 4.00 |
| Growth Rate | 1.00 | 1.00 | 1.00 | 1.00 | 1.00 | 1.00 |
| In-Process Volume [veh/h] | 0 | 0 | 0 | 0 | 0 | 0 |
| Site-Generated Trips [veh/h] | 0 | 0 | 0 | 0 | 0 | 0 |
| Diverted Trips [veh/h] | 0 | 0 | 0 | 0 | 0 | 0 |
| Pass-by Trips [veh/h] | 0 | 0 | 0 | 0 | 0 | 0 |
| Existing Site Adjustment Volume [veh/h] | 0 | 0 | 0 | 0 | 0 | 0 |
| Other Volume [veh/h] | 0 | 0 | 0 | 0 | 0 | 0 |
| Right-Turn on Red Volume [veh/h] | 0 | 0 | 0 | 0 | 0 | 0 |
| Total Hourly Volume [veh/h] | 48 | 250 | 130 | 61 | 331 | 72 |
| Peak Hour Factor | 0.9270 | 0.9270 | 0.9270 | 0.9270 | 0.9270 | 0.9270 |
| Other Adjustment Factor | 1.0000 | 1.0000 | 1.0000 | 1.0000 | 1.0000 | 1.0000 |
| Total 15-Minute Volume [veh/h] | 13 | 67 | 35 | 16 | 89 | 19 |
| Total Analysis Volume [veh/h] | 52 | 270 | 140 | 66 | 357 | 78 |
| Presence of On-Street Parking | No | No | No | No | No | No |
| On-Street Parking Maneuver Rate [/h] | 0 | 0 | 0 | 0 | 0 | 0 |
| Local Bus Stopping Rate [/h] | 0 | 0 | 0 | 0 | 0 | 0 |
| Pedestrian Volume [ped/h] | 0 | | 0 | | 0 | |
| Bicycle Volume [bicycles/h] | 0 | | 0 | | 0 | |

**Intersection Settings**

| | |
|---|---|
| Located in CBD | No |
| Signal Coordination Group | 3 - EW - Valley |
| Cycle Length [s] | 120 |
| Coordination Type | Time of Day Pattern Coordinated |
| Actuation Type | Fully actuated |
| Offset [s] | 0.0 |
| Offset Reference | LagFO |
| Permissive Mode | SingleBand |
| Lost time [s] | 12.00 |

**Phasing & Timing**

| Control Type | Split | Split | Protected | Permissive | Permissive | Permissive |
|---|---|---|---|---|---|---|
| Signal group | 1 | 0 | 3 | 8 | 4 | 0 |
| Auxiliary Signal Groups | | | | | | |
| Lead / Lag | Lead | - | Lead | - | - | - |
| Minimum Green [s] | 5 | 0 | 5 | 5 | 5 | 0 |
| Maximum Green [s] | 30 | 0 | 30 | 30 | 30 | 0 |
| Amber [s] | 4.1 | 0.0 | 4.4 | 4.4 | 4.4 | 0.0 |
| All red [s] | 1.0 | 0.0 | 1.0 | 1.0 | 1.0 | 0.0 |
| Split [s] | 58 | 0 | 26 | 62 | 36 | 0 |
| Vehicle Extension [s] | 3.0 | 0.0 | 3.0 | 3.0 | 3.0 | 0.0 |
| Walk [s] | 7 | 0 | 0 | 7 | 7 | 0 |
| Pedestrian Clearance [s] | 26 | 0 | 0 | 17 | 17 | 0 |
| I1, Start-Up Lost Time [s] | 2.0 | 0.0 | 2.0 | 2.0 | 2.0 | 0.0 |
| I2, Clearance Lost Time [s] | 3.1 | 0.0 | 3.4 | 3.4 | 3.4 | 0.0 |
| Minimum Recall | No | | No | No | No | |
| Maximum Recall | No | | No | No | No | |
| Pedestrian Recall | No | | No | No | No | |
| Detector Location [ft] | 0.0 | 0.0 | 0.0 | 0.0 | 0.0 | 0.0 |
| Detector Length [ft] | 0.0 | 0.0 | 0.0 | 0.0 | 0.0 | 0.0 |
| I, Upstream Filtering Factor | 1.00 | 1.00 | 1.00 | 1.00 | 1.00 | 1.00 |

**Exclusive Pedestrian Phase**

| | |
|---|---|
| Pedestrian Signal Group | 0 |
| Pedestrian Walk [s] | 0 |
| Pedestrian Clearance [s] | 0 |

**Lane Group Calculations**

| Lane Group | C | L | C | C | C |
|---|---|---|---|---|---|
| L, Total Lost Time per Cycle [s] | 5.10 | 5.40 | 5.40 | 5.40 | 5.40 |
| l1_p, Permitted Start-Up Lost Time [s] | 0.00 | 0.00 | 0.00 | 0.00 | 0.00 |
| l2, Clearance Lost Time [s] | 3.10 | 3.40 | 3.40 | 3.40 | 3.40 |
| g_i, Effective Green Time [s] | 26 | 12 | 83 | 66 | 66 |
| g / C, Green / Cycle | 0.22 | 0.10 | 0.69 | 0.55 | 0.55 |
| (v / s)_i Volume / Saturation Flow Rate | 0.20 | 0.08 | 0.02 | 0.08 | 0.09 |
| s, saturation flow rate [veh/h] | 1611 | 1740 | 3478 | 3478 | 1669 |
| c, Capacity [veh/h] | 352 | 168 | 2413 | 1920 | 921 |
| d1, Uniform Delay [s] | 45.76 | 51.27 | 1.38 | 7.49 | 7.51 |
| k, delay calibration | 0.11 | 0.11 | 0.50 | 0.50 | 0.50 |
| I, Upstream Filtering Factor | 1.00 | 1.00 | 1.00 | 1.00 | 1.00 |
| d2, Incremental Delay [s] | 9.43 | 10.03 | 0.02 | 0.17 | 0.36 |
| d3, Initial Queue Delay [s] | 0.00 | 0.00 | 0.00 | 0.00 | 0.00 |
| Rp, platoon ratio | 1.00 | 1.33 | 1.33 | 1.33 | 1.33 |
| PF, progression factor | 1.00 | 1.00 | 1.00 | 1.00 | 1.00 |

**Lane Group Results**

| | | | | | |
|---|---|---|---|---|---|
| X, volume / capacity | 0.91 | 0.83 | 0.03 | 0.15 | 0.16 |
| d, Delay for Lane Group [s/veh] | 55.19 | 61.30 | 1.40 | 7.65 | 7.87 |
| Lane Group LOS | E | E | A | A | A |
| Critical Lane Group | Yes | Yes | No | No | Yes |
| 50th-Percentile Queue Length [veh] | 10.15 | 4.39 | 0.06 | 1.09 | 1.14 |
| 50th-Percentile Queue Length [ft] | 253.70 | 109.65 | 1.57 | 27.17 | 28.45 |
| 95th-Percentile Queue Length [veh] | 15.37 | 7.82 | 0.11 | 1.96 | 2.05 |
| 95th-Percentile Queue Length [ft] | 384.31 | 195.52 | 2.83 | 48.90 | 51.21 |

**Movement, Approach, & Intersection Results**

| | | | | | | |
|---|---|---|---|---|---|---|
| d_M, Delay for Movement [s/veh] | 55.19 | 55.19 | 61.30 | 1.40 | 7.69 | 7.87 |
| Movement LOS | E | E | E | A | A | A |
| d_A, Approach Delay [s/veh] | 55.19 | | 42.11 | | 7.73 | |
| Approach LOS | E | | D | | A | |
| d_I, Intersection Delay [s/veh] | 30.95 | | | | | |
| Intersection LOS | C | | | | | |
| Intersection V/C | 0.408 | | | | | |

## Sequence

| | | | | | | | | | | | | | | | | |
|---|---|---|---|---|---|---|---|---|---|---|---|---|---|---|---|---|
| Ring 1 | 1 | 3 | 4 | - | - | - | - | - | - | - | - | - | - | - | - | - |
| Ring 2 | - | - | 8 | - | - | - | - | - | - | - | - | - | - | - | - | - |
| Ring 3 | - | - | - | - | - | - | - | - | - | - | - | - | - | - | - | - |
| Ring 4 | - | - | - | - | - | - | - | - | - | - | - | - | - | - | - | - |

**Intersection Level Of Service Report**
**Intersection 6: Alder Ave (NS) / San Bernardino Ave (EW)**

| | | | |
|---|---|---|---|
| Control Type: | Signalized | Delay (sec / veh): | 19.8 |
| Analysis Method: | HCM 2010 | Level Of Service: | B |
| Analysis Period: | 15 minutes | Volume to Capacity (v/c): | 0.621 |

**Intersection Setup**

| Name | Alder Avenue | | | Alder Avenue | | | San Bernardino Avenue | | | San Bernardino Avenue | | |
|---|---|---|---|---|---|---|---|---|---|---|---|---|
| Approach | Northbound | | | Southbound | | | Eastbound | | | Westbound | | |
| Lane Configuration | | | | | | | | | | | | |
| Turning Movement | Left | Thru | Right | Left | Thru | Right | Left | Thru | Right | Left | Thru | Right |
| Lane Width [ft] | 12.00 | 12.00 | 12.00 | 12.00 | 12.00 | 12.00 | 12.00 | 12.00 | 12.00 | 12.00 | 12.00 | 12.00 |
| No. of Lanes in Pocket | 1 | 0 | 0 | 1 | 0 | 0 | 1 | 0 | 0 | 1 | 0 | 0 |
| Pocket Length [ft] | 100.00 | 100.00 | 100.00 | 100.00 | 100.00 | 100.00 | 100.00 | 100.00 | 100.00 | 80.00 | 100.00 | 100.00 |
| Speed [mph] | 40.00 | | | 40.00 | | | 35.00 | | | 35.00 | | |
| Grade [%] | 0.00 | | | 0.00 | | | 0.00 | | | 0.00 | | |
| Crosswalk | Yes | | | Yes | | | Yes | | | Yes | | |

**volumes**

| Name | Alder Avenue | | | Alder Avenue | | | San Bernardino Avenue | | | San Bernardino Avenue | | |
|---|---|---|---|---|---|---|---|---|---|---|---|---|
| Base Volume Input [veh/h] | 13 | 219 | 78 | 14 | 565 | 44 | 23 | 129 | 117 | 199 | 177 | 14 |
| Base Volume Adjustment Factor | 1.0000 | 1.0000 | 1.0000 | 1.0000 | 1.0000 | 1.0000 | 1.0000 | 1.0000 | 1.0000 | 1.0000 | 1.0000 | 1.0000 |
| Heavy Vehicles Percentage [%] | 2.00 | 2.00 | 2.00 | 2.00 | 2.00 | 2.00 | 2.00 | 2.00 | 2.00 | 2.00 | 2.00 | 2.00 |
| Growth Rate | 1.00 | 1.00 | 1.00 | 1.00 | 1.00 | 1.00 | 1.00 | 1.00 | 1.00 | 1.00 | 1.00 | 1.00 |
| In-Process Volume [veh/h] | 0 | 0 | 0 | 0 | 0 | 0 | 0 | 0 | 0 | 0 | 0 | 0 |
| Site-Generated Trips [veh/h] | 0 | 0 | 0 | 0 | 0 | 0 | 0 | 0 | 0 | 0 | 0 | 0 |
| Diverted Trips [veh/h] | 0 | 0 | 0 | 0 | 0 | 0 | 0 | 0 | 0 | 0 | 0 | 0 |
| Pass-by Trips [veh/h] | 0 | 0 | 0 | 0 | 0 | 0 | 0 | 0 | 0 | 0 | 0 | 0 |
| Existing Site Adjustment Volume [veh/h] | 0 | 0 | 0 | 0 | 0 | 0 | 0 | 0 | 0 | 0 | 0 | 0 |
| Other Volume [veh/h] | 0 | 0 | 0 | 0 | 0 | 0 | 0 | 0 | 0 | 0 | 0 | 0 |
| Right-Turn on Red Volume [veh/h] | 0 | 0 | 0 | 0 | 0 | 0 | 0 | 0 | 0 | 0 | 0 | 0 |
| Total Hourly Volume [veh/h] | 13 | 219 | 78 | 14 | 565 | 44 | 23 | 129 | 117 | 199 | 177 | 14 |
| Peak Hour Factor | 0.8530 | 0.8530 | 0.8530 | 0.8530 | 0.8530 | 0.8530 | 0.8530 | 0.8530 | 0.8530 | 0.8530 | 0.8530 | 0.8530 |
| Other Adjustment Factor | 1.0000 | 1.0000 | 1.0000 | 1.0000 | 1.0000 | 1.0000 | 1.0000 | 1.0000 | 1.0000 | 1.0000 | 1.0000 | 1.0000 |
| Total 15-Minute Volume [veh/h] | 4 | 64 | 23 | 4 | 166 | 13 | 7 | 38 | 34 | 58 | 52 | 4 |
| Total Analysis Volume [veh/h] | 15 | 257 | 91 | 16 | 662 | 52 | 27 | 151 | 137 | 233 | 208 | 16 |
| Presence of On-Street Parking | No | | No | No | | No | No | | No | No | | No |
| On-Street Parking Maneuver Rate [/h] | 0 | 0 | 0 | 0 | 0 | 0 | 0 | 0 | 0 | 0 | 0 | 0 |
| Local Bus Stopping Rate [/h] | 0 | 0 | 0 | 0 | 0 | 0 | 0 | 0 | 0 | 0 | 0 | 0 |
| Pedestrian Volume [ped/h] | 0 | | | 0 | | | 0 | | | 0 | | |
| Bicycle Volume [bicycles/h] | 0 | | | 0 | | | 0 | | | 0 | | |

**Intersection Settings**

| | |
|---|---|
| Located in CBD | No |
| Signal Coordination Group | - |
| Cycle Length [s] | 100 |
| Coordination Type | Time of Day Pattern Isolated |
| Actuation Type | Fully actuated |
| Offset [s] | 0.0 |
| Offset Reference | LagFO |
| Permissive Mode | SingleBand |
| Lost time [s] | 16.00 |

**Phasing & Timing**

| Control Type | Protecte | Permiss | Permiss | Protecte | Permiss | Permiss | Protecte | Permiss | Permiss | Protecte | Permiss | Permiss |
|---|---|---|---|---|---|---|---|---|---|---|---|---|
| Signal group | 5 | 2 | 0 | 1 | 6 | 0 | 3 | 8 | 0 | 7 | 4 | 0 |
| Auxiliary Signal Groups | | | | | | | | | | | | |
| Lead / Lag | Lead | - | - | Lead | - | - | Lead | - | - | Lead | - | - |
| Minimum Green [s] | 5 | 5 | 0 | 5 | 5 | 0 | 5 | 5 | 0 | 5 | 5 | 0 |
| Maximum Green [s] | 30 | 30 | 0 | 30 | 30 | 0 | 30 | 30 | 0 | 30 | 30 | 0 |
| Amber [s] | 4.4 | 4.4 | 0.0 | 4.4 | 4.4 | 0.0 | 4.1 | 4.1 | 0.0 | 4.1 | 4.1 | 0.0 |
| All red [s] | 1.0 | 1.0 | 0.0 | 1.0 | 1.0 | 0.0 | 1.0 | 1.0 | 0.0 | 1.0 | 1.0 | 0.0 |
| Split [s] | 11 | 37 | 0 | 11 | 37 | 0 | 14 | 37 | 0 | 15 | 38 | 0 |
| Vehicle Extension [s] | 3.0 | 3.0 | 0.0 | 3.0 | 3.0 | 0.0 | 3.0 | 3.0 | 0.0 | 3.0 | 3.0 | 0.0 |
| Walk [s] | 0 | 7 | 0 | 0 | 7 | 0 | 0 | 7 | 0 | 0 | 7 | 0 |
| Pedestrian Clearance [s] | 0 | 24 | 0 | 0 | 24 | 0 | 0 | 24 | 0 | 0 | 24 | 0 |
| I1, Start-Up Lost Time [s] | 2.0 | 2.0 | 0.0 | 2.0 | 2.0 | 0.0 | 2.0 | 2.0 | 0.0 | 2.0 | 2.0 | 0.0 |
| I2, Clearance Lost Time [s] | 3.4 | 3.4 | 0.0 | 3.4 | 3.4 | 0.0 | 3.1 | 3.1 | 0.0 | 3.1 | 3.1 | 0.0 |
| Minimum Recall | No | No | | No | No | | No | No | | No | No | |
| Maximum Recall | No | No | | No | No | | No | No | | No | No | |
| Pedestrian Recall | No | No | | No | No | | No | No | | No | No | |
| Detector Location [ft] | 0.0 | 0.0 | 0.0 | 0.0 | 0.0 | 0.0 | 0.0 | 0.0 | 0.0 | 0.0 | 0.0 | 0.0 |
| Detector Length [ft] | 0.0 | 0.0 | 0.0 | 0.0 | 0.0 | 0.0 | 0.0 | 0.0 | 0.0 | 0.0 | 0.0 | 0.0 |
| I, Upstream Filtering Factor | 1.00 | 1.00 | 1.00 | 1.00 | 1.00 | 1.00 | 1.00 | 1.00 | 1.00 | 1.00 | 1.00 | 1.00 |

**Exclusive Pedestrian Phase**

| | |
|---|---|
| Pedestrian Signal Group | 0 |
| Pedestrian Walk [s] | 0 |
| Pedestrian Clearance [s] | 0 |

**Lane Group Calculations**

| Lane Group | L | C | C | L | C | C | L | C | C | L | C | C |
|---|---|---|---|---|---|---|---|---|---|---|---|---|
| L, Total Lost Time per Cycle [s] | 5.40 | 5.40 | 5.40 | 5.40 | 5.40 | 5.40 | 5.10 | 5.10 | 5.10 | 5.10 | 5.10 | 5.10 |
| l1_p, Permitted Start-Up Lost Time [s] | 0.00 | 0.00 | 0.00 | 0.00 | 0.00 | 0.00 | 0.00 | 0.00 | 0.00 | 0.00 | 0.00 | 0.00 |
| l2, Clearance Lost Time [s] | 3.40 | 3.40 | 3.40 | 3.40 | 3.40 | 3.40 | 3.10 | 3.10 | 3.10 | 3.10 | 3.10 | 3.10 |
| g_i, Effective Green Time [s] | 1 | 13 | 13 | 1 | 13 | 13 | 2 | 7 | 7 | 8 | 14 | 14 |
| g / C, Green / Cycle | 0.02 | 0.25 | 0.25 | 0.02 | 0.25 | 0.25 | 0.03 | 0.13 | 0.13 | 0.17 | 0.27 | 0.27 |
| (v / s)_i Volume / Saturation Flow Rate | 0.01 | 0.10 | 0.10 | 0.01 | 0.19 | 0.19 | 0.02 | 0.08 | 0.09 | 0.13 | 0.06 | 0.06 |
| s, saturation flow rate [veh/h] | 1774 | 1863 | 1701 | 1774 | 1863 | 1816 | 1774 | 1863 | 1584 | 1774 | 1863 | 1817 |
| c, Capacity [veh/h] | 34 | 472 | 431 | 36 | 474 | 462 | 56 | 251 | 213 | 303 | 509 | 497 |
| d1, Uniform Delay [s] | 24.20 | 15.38 | 15.44 | 24.16 | 17.20 | 17.20 | 23.74 | 20.33 | 20.46 | 19.74 | 14.02 | 14.02 |
| k, delay calibration | 0.11 | 0.11 | 0.11 | 0.11 | 0.11 | 0.11 | 0.11 | 0.11 | 0.11 | 0.11 | 0.11 | 0.11 |
| I, Upstream Filtering Factor | 1.00 | 1.00 | 1.00 | 1.00 | 1.00 | 1.00 | 1.00 | 1.00 | 1.00 | 1.00 | 1.00 | 1.00 |
| d2, Incremental Delay [s] | 8.69 | 0.50 | 0.58 | 8.32 | 2.56 | 2.65 | 6.15 | 2.31 | 3.25 | 4.11 | 0.22 | 0.23 |
| d3, Initial Queue Delay [s] | 0.00 | 0.00 | 0.00 | 0.00 | 0.00 | 0.00 | 0.00 | 0.00 | 0.00 | 0.00 | 0.00 | 0.00 |
| Rp, platoon ratio | 1.00 | 1.00 | 1.00 | 1.00 | 1.00 | 1.00 | 1.00 | 1.00 | 1.00 | 1.00 | 1.00 | 1.00 |
| PF, progression factor | 1.00 | 1.00 | 1.00 | 1.00 | 1.00 | 1.00 | 1.00 | 1.00 | 1.00 | 1.00 | 1.00 | 1.00 |

**Lane Group Results**

| | | | | | | | | | | | | |
|---|---|---|---|---|---|---|---|---|---|---|---|---|
| X, volume / capacity | 0.44 | 0.38 | 0.39 | 0.44 | 0.76 | 0.76 | 0.48 | 0.60 | 0.65 | 0.77 | 0.22 | 0.22 |
| d, Delay for Lane Group [s/veh] | 32.89 | 15.88 | 16.02 | 32.47 | 19.76 | 19.85 | 29.89 | 22.64 | 23.71 | 23.85 | 14.23 | 14.25 |
| Lane Group LOS | C | B | B | C | B | B | C | C | C | C | B | B |
| Critical Lane Group | Yes | No | No | No | No | Yes | No | No | Yes | Yes | No | No |
| 50th-Percentile Queue Length [veh] | 0.24 | 1.45 | 1.38 | 0.25 | 3.46 | 3.39 | 0.38 | 1.61 | 1.52 | 2.58 | 0.86 | 0.85 |
| 50th-Percentile Queue Length [ft] | 5.92 | 36.17 | 34.50 | 6.20 | 86.47 | 84.69 | 9.44 | 40.23 | 38.09 | 64.62 | 21.62 | 21.26 |
| 95th-Percentile Queue Length [veh] | 0.43 | 2.60 | 2.48 | 0.45 | 6.23 | 6.10 | 0.68 | 2.90 | 2.74 | 4.65 | 1.56 | 1.53 |
| 95th-Percentile Queue Length [ft] | 10.65 | 65.10 | 62.11 | 11.16 | 155.65 | 152.45 | 17.00 | 72.42 | 68.56 | 116.31 | 38.91 | 38.27 |

**Movement, Approach, & Intersection Results**

| | | | | | | | | | | | | |
|---|---|---|---|---|---|---|---|---|---|---|---|---|
| d_M, Delay for Movement [s/veh] | 32.89 | 15.92 | 16.02 | 32.47 | 19.80 | 19.85 | 29.89 | 22.64 | 23.71 | 23.85 | 14.24 | 14.25 |
| Movement LOS | C | B | B | C | B | B | C | C | C | C | B | B |
| d_A, Approach Delay [s/veh] | 16.65 | | | 20.08 | | | 23.73 | | | 19.14 | | |
| Approach LOS | B | | | C | | | C | | | B | | |
| d_I, Intersection Delay [s/veh] | 19.80 | | | | | | | | | | | |
| Intersection LOS | B | | | | | | | | | | | |
| Intersection V/C | 0.621 | | | | | | | | | | | |

## Sequence

| | | | | | | | | | | | | | | | | |
|---|---|---|---|---|---|---|---|---|---|---|---|---|---|---|---|---|
| Ring 1 | 1 | 2 | 3 | 4 | - | - | - | - | - | - | - | - | - | - | - | - |
| Ring 2 | 5 | 6 | 7 | 8 | - | - | - | - | - | - | - | - | - | - | - | - |
| Ring 3 | - | - | - | - | - | - | - | - | - | - | - | - | - | - | - | - |
| Ring 4 | - | - | - | - | - | - | - | - | - | - | - | - | - | - | - | - |

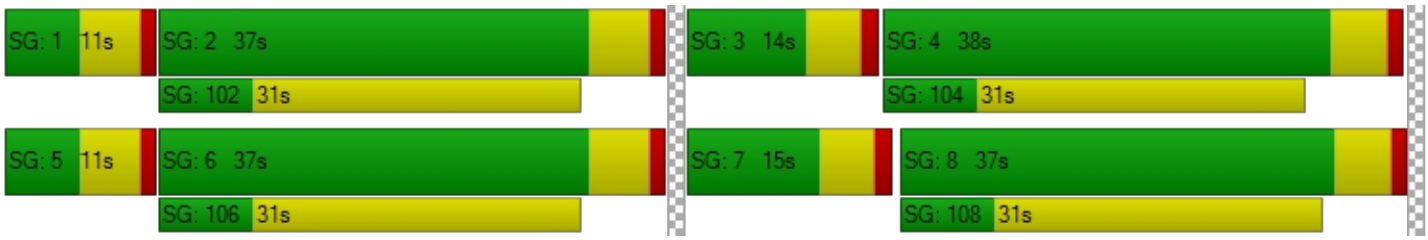

**Intersection Level Of Service Report**
**Intersection 7: Alder Ave (NS) / Marygold Ave (EW)**

| | | | |
|---|---|---|---|
| Control Type: | All-way stop | Delay (sec / veh): | 29.5 |
| Analysis Method: | HCM 2010 | Level Of Service: | D |
| Analysis Period: | 15 minutes | | |

**Intersection Setup**

| Name | Alder Avenue | | | Alder Avenue | | | Marygold Avenue | | | Marygold Avenue | | |
|---|---|---|---|---|---|---|---|---|---|---|---|---|
| Approach | Northbound | | | Southbound | | | Eastbound | | | Westbound | | |
| Lane Configuration | | | | | | | | | | | | |
| Turning Movement | Left | Thru | Right | Left | Thru | Right | Left | Thru | Right | Left | Thru | Right |
| Lane Width [ft] | 12.00 | 12.00 | 12.00 | 12.00 | 12.00 | 12.00 | 12.00 | 12.00 | 12.00 | 12.00 | 12.00 | 12.00 |
| No. of Lanes in Pocket | 0 | 0 | 1 | 0 | 0 | 0 | 0 | 0 | 0 | 0 | 0 | 0 |
| Pocket Length [ft] | 100.00 | 100.00 | 200.00 | 100.00 | 100.00 | 100.00 | 100.00 | 100.00 | 100.00 | 100.00 | 100.00 | 100.00 |
| Speed [mph] | 40.00 | | | 40.00 | | | 35.00 | | | 25.00 | | |
| Grade [%] | 0.00 | | | 0.00 | | | 0.00 | | | 0.00 | | |
| Crosswalk | Yes | | | Yes | | | Yes | | | Yes | | |

**volumes**

| Name | Alder Avenue | | | Alder Avenue | | | Marygold Avenue | | | Marygold Avenue | | |
|---|---|---|---|---|---|---|---|---|---|---|---|---|
| Base Volume Input [veh/h] | 17 | 306 | 6 | 17 | 573 | 192 | 60 | 9 | 28 | 5 | 10 | 5 |
| Base Volume Adjustment Factor | 1.0000 | 1.0000 | 1.0000 | 1.0000 | 1.0000 | 1.0000 | 1.0000 | 1.0000 | 1.0000 | 1.0000 | 1.0000 | 1.0000 |
| Heavy Vehicles Percentage [%] | 2.00 | 2.00 | 2.00 | 2.00 | 2.00 | 2.00 | 2.00 | 2.00 | 2.00 | 2.00 | 2.00 | 2.00 |
| Growth Rate | 1.00 | 1.00 | 1.00 | 1.00 | 1.00 | 1.00 | 1.00 | 1.00 | 1.00 | 1.00 | 1.00 | 1.00 |
| In-Process Volume [veh/h] | 0 | 0 | 0 | 0 | 0 | 0 | 0 | 0 | 0 | 0 | 0 | 0 |
| Site-Generated Trips [veh/h] | 0 | 0 | 0 | 0 | 0 | 0 | 0 | 0 | 0 | 0 | 0 | 0 |
| Diverted Trips [veh/h] | 0 | 0 | 0 | 0 | 0 | 0 | 0 | 0 | 0 | 0 | 0 | 0 |
| Pass-by Trips [veh/h] | 0 | 0 | 0 | 0 | 0 | 0 | 0 | 0 | 0 | 0 | 0 | 0 |
| Existing Site Adjustment Volume [veh/h] | 0 | 0 | 0 | 0 | 0 | 0 | 0 | 0 | 0 | 0 | 0 | 0 |
| Other Volume [veh/h] | 0 | 0 | 0 | 0 | 0 | 0 | 0 | 0 | 0 | 0 | 0 | 0 |
| Total Hourly Volume [veh/h] | 17 | 306 | 6 | 17 | 573 | 192 | 60 | 9 | 28 | 5 | 10 | 5 |
| Peak Hour Factor | 0.9220 | 0.9220 | 0.9220 | 0.9220 | 0.9220 | 0.9220 | 0.9220 | 0.9220 | 0.9220 | 0.9220 | 0.9220 | 0.9220 |
| Other Adjustment Factor | 1.0000 | 1.0000 | 1.0000 | 1.0000 | 1.0000 | 1.0000 | 1.0000 | 1.0000 | 1.0000 | 1.0000 | 1.0000 | 1.0000 |
| Total 15-Minute Volume [veh/h] | 5 | 83 | 2 | 5 | 155 | 52 | 16 | 2 | 8 | 1 | 3 | 1 |
| Total Analysis Volume [veh/h] | 18 | 332 | 7 | 18 | 621 | 208 | 65 | 10 | 30 | 5 | 11 | 5 |
| Pedestrian Volume [ped/h] | 0 | | | 0 | | | 0 | | | 0 | | |

**Intersection Settings**

**Lanes**

**Movement, Approach, & Intersection Results**

| | | | | | | |
|---|---|---|---|---|---|---|
| 95th-Percentile Queue Length [veh] | 3.63 | 0.03 | 13.75 | 1.09 | 0.69 | 0.12 |
| 95th-Percentile Queue Length [ft] | 90.87 | 0.76 | 343.84 | 27.27 | 17.37 | 3.07 |
| Approach Delay [s/veh] | 16.09 | | 37.95 | | 11.03 | 10.03 |
| Approach LOS | C | | E | | B | B |
| Intersection Delay [s/veh] | 29.52 | | | | | |
| Intersection LOS | D | | | | | |

**Intersection Level Of Service Report**
**Intersection 8: Alder Ave (NS) / Valley Blvd (EW)**

| | | | |
|---|---|---|---|
| Control Type: | Signalized | Delay (sec / veh): | 310.3 |
| Analysis Method: | HCM 2010 | Level Of Service: | F |
| Analysis Period: | 15 minutes | Volume to Capacity (v/c): | 1.873 |

**Intersection Setup**

| Name | Alder Avenue | | | Alder Avenue | | | Valley Boulevard | | | | | |
|---|---|---|---|---|---|---|---|---|---|---|---|---|
| Approach | Northbound | | | Southbound | | | Eastbound | | | Westbound | | |
| Lane Configuration | | | | | | | | | | | | |
| Turning Movement | Left | Thru | Right | Left | Thru | Right | Left | Thru | Right | Left | Thru | Right |
| Lane Width [ft] | 12.00 | 12.00 | 12.00 | 12.00 | 12.00 | 12.00 | 12.00 | 12.00 | 12.00 | 12.00 | 12.00 | 12.00 |
| No. of Lanes in Pocket | 0 | 0 | 1 | 0 | 0 | 0 | 1 | 0 | 0 | 1 | 0 | 0 |
| Pocket Length [ft] | 100.00 | 100.00 | 55.00 | 100.00 | 100.00 | 100.00 | 100.00 | 100.00 | 100.00 | 100.00 | 100.00 | 100.00 |
| Speed [mph] | 40.00 | | | 40.00 | | | 40.00 | | | 30.00 | | |
| Grade [%] | 0.00 | | | 0.00 | | | 0.00 | | | 0.00 | | |
| Crosswalk | Yes | | | Yes | | | Yes | | | Yes | | |

**volumes**

| Name | Alder Avenue | | | Alder Avenue | | | Valley Boulevard | | | | | |
|---|---|---|---|---|---|---|---|---|---|---|---|---|
| Base Volume Input [veh/h] | 180 | 190 | 102 | 49 | 480 | 30 | 62 | 139 | 253 | 230 | 142 | 56 |
| Base Volume Adjustment Factor | 1.0000 | 1.0000 | 1.0000 | 1.0000 | 1.0000 | 1.0000 | 1.0000 | 1.0000 | 1.0000 | 1.0000 | 1.0000 | 1.0000 |
| Heavy Vehicles Percentage [%] | 2.00 | 2.00 | 2.00 | 2.00 | 2.00 | 2.00 | 4.00 | 4.00 | 4.00 | 4.00 | 4.00 | 4.00 |
| Growth Rate | 1.00 | 1.00 | 1.00 | 1.00 | 1.00 | 1.00 | 1.00 | 1.00 | 1.00 | 1.00 | 1.00 | 1.00 |
| In-Process Volume [veh/h] | 0 | 0 | 0 | 0 | 0 | 0 | 0 | 0 | 0 | 0 | 0 | 0 |
| Site-Generated Trips [veh/h] | 0 | 0 | 0 | 0 | 0 | 0 | 0 | 0 | 0 | 0 | 0 | 0 |
| Diverted Trips [veh/h] | 0 | 0 | 0 | 0 | 0 | 0 | 0 | 0 | 0 | 0 | 0 | 0 |
| Pass-by Trips [veh/h] | 0 | 0 | 0 | 0 | 0 | 0 | 0 | 0 | 0 | 0 | 0 | 0 |
| Existing Site Adjustment Volume [veh/h] | 0 | 0 | 0 | 0 | 0 | 0 | 0 | 0 | 0 | 0 | 0 | 0 |
| Other Volume [veh/h] | 0 | 0 | 0 | 0 | 0 | 0 | 0 | 0 | 0 | 0 | 0 | 0 |
| Right-Turn on Red Volume [veh/h] | 0 | 0 | 0 | 0 | 0 | 0 | 0 | 0 | 0 | 0 | 0 | 0 |
| Total Hourly Volume [veh/h] | 180 | 190 | 102 | 49 | 480 | 30 | 62 | 139 | 253 | 230 | 142 | 56 |
| Peak Hour Factor | 0.8890 | 0.8890 | 0.8890 | 0.8890 | 0.8890 | 0.8890 | 0.8890 | 0.8890 | 0.8890 | 0.8890 | 0.8890 | 0.8890 |
| Other Adjustment Factor | 1.0000 | 1.0000 | 1.0000 | 1.0000 | 1.0000 | 1.0000 | 1.0000 | 1.0000 | 1.0000 | 1.0000 | 1.0000 | 1.0000 |
| Total 15-Minute Volume [veh/h] | 51 | 53 | 29 | 14 | 135 | 8 | 17 | 39 | 71 | 65 | 40 | 16 |
| Total Analysis Volume [veh/h] | 202 | 214 | 115 | 55 | 540 | 34 | 70 | 156 | 285 | 259 | 160 | 63 |
| Presence of On-Street Parking | No | | No | No | | No | No | | No | No | | No |
| On-Street Parking Maneuver Rate [/h] | 0 | 0 | 0 | 0 | 0 | 0 | 0 | 0 | 0 | 0 | 0 | 0 |
| Local Bus Stopping Rate [/h] | 0 | 0 | 0 | 0 | 0 | 0 | 0 | 0 | 0 | 0 | 0 | 0 |
| Pedestrian Volume [ped/h] | 0 | | | 0 | | | 0 | | | 0 | | |
| Bicycle Volume [bicycles/h] | 0 | | | 0 | | | 0 | | | 0 | | |

**Intersection Settings**

| | |
|---|---|
| Located in CBD | No |
| Signal Coordination Group | 3 - EW - Valley |
| Cycle Length [s] | 120 |
| Coordination Type | Time of Day Pattern Coordinated |
| Actuation Type | Fully actuated |
| Offset [s] | 8.0 |
| Offset Reference | LagFO |
| Permissive Mode | SingleBand |
| Lost time [s] | 12.00 |

**Phasing & Timing**

| Control Type | Permiss | Permiss | Permiss | Permiss | Permiss | Permiss | Protecte | Permiss | Permiss | Protecte | Permiss | Permiss |
|---|---|---|---|---|---|---|---|---|---|---|---|---|
| Signal group | 0 | 2 | 0 | 0 | 6 | 0 | 3 | 8 | 0 | 7 | 4 | 0 |
| Auxiliary Signal Groups | | | | | | | | | | | | |
| Lead / Lag | - | - | - | - | - | - | Lead | - | - | Lead | - | - |
| Minimum Green [s] | 0 | 5 | 0 | 0 | 5 | 0 | 5 | 5 | 0 | 5 | 5 | 0 |
| Maximum Green [s] | 0 | 30 | 0 | 0 | 30 | 0 | 30 | 30 | 0 | 30 | 30 | 0 |
| Amber [s] | 0.0 | 4.4 | 0.0 | 0.0 | 4.4 | 0.0 | 4.4 | 4.4 | 0.0 | 3.7 | 3.7 | 0.0 |
| All red [s] | 0.0 | 1.0 | 0.0 | 0.0 | 1.0 | 0.0 | 1.0 | 1.0 | 0.0 | 1.0 | 1.0 | 0.0 |
| Split [s] | 0 | 68 | 0 | 0 | 68 | 0 | 14 | 35 | 0 | 17 | 38 | 0 |
| Vehicle Extension [s] | 0.0 | 3.0 | 0.0 | 0.0 | 3.0 | 0.0 | 3.0 | 3.0 | 0.0 | 3.0 | 3.0 | 0.0 |
| Walk [s] | 0 | 7 | 0 | 0 | 7 | 0 | 0 | 7 | 0 | 0 | 7 | 0 |
| Pedestrian Clearance [s] | 0 | 25 | 0 | 0 | 29 | 0 | 0 | 22 | 0 | 0 | 21 | 0 |
| I1, Start-Up Lost Time [s] | 0.0 | 2.0 | 0.0 | 0.0 | 2.0 | 0.0 | 2.0 | 2.0 | 0.0 | 2.0 | 2.0 | 0.0 |
| I2, Clearance Lost Time [s] | 0.0 | 3.4 | 0.0 | 0.0 | 3.4 | 0.0 | 3.4 | 3.4 | 0.0 | 2.7 | 2.7 | 0.0 |
| Minimum Recall | | No | | | No | | No | No | | No | No | |
| Maximum Recall | | No | | | No | | No | No | | No | No | |
| Pedestrian Recall | | No | | | No | | No | No | | No | No | |
| Detector Location [ft] | 0.0 | 0.0 | 0.0 | 0.0 | 0.0 | 0.0 | 0.0 | 0.0 | 0.0 | 0.0 | 0.0 | 0.0 |
| Detector Length [ft] | 0.0 | 0.0 | 0.0 | 0.0 | 0.0 | 0.0 | 0.0 | 0.0 | 0.0 | 0.0 | 0.0 | 0.0 |
| I, Upstream Filtering Factor | 1.00 | 1.00 | 1.00 | 1.00 | 1.00 | 1.00 | 1.00 | 1.00 | 1.00 | 1.00 | 1.00 | 1.00 |

**Exclusive Pedestrian Phase**

| | |
|---|---|
| Pedestrian Signal Group | 0 |
| Pedestrian Walk [s] | 0 |
| Pedestrian Clearance [s] | 0 |

**Lane Group Calculations**

| Lane Group | C | R | C | L | C | C | L | C | C |
|---|---|---|---|---|---|---|---|---|---|
| L, Total Lost Time per Cycle [s] | 5.40 | 5.40 | 5.40 | 5.40 | 5.40 | 5.40 | 4.70 | 4.70 | 4.70 |
| l1_p, Permitted Start-Up Lost Time [s] | 2.00 | 0.00 | 2.00 | 0.00 | 0.00 | 0.00 | 0.00 | 0.00 | 0.00 |
| l2, Clearance Lost Time [s] | 3.40 | 3.40 | 3.40 | 3.40 | 3.40 | 3.40 | 2.70 | 2.70 | 2.70 |
| g_i, Effective Green Time [s] | 63 | 63 | 63 | 6 | 30 | 30 | 12 | 36 | 36 |
| g / C, Green / Cycle | 0.52 | 0.52 | 0.52 | 0.05 | 0.25 | 0.25 | 0.10 | 0.30 | 0.30 |
| (v / s)_i Volume / Saturation Flow Rate | 1.14 | 0.07 | 1.35 | 0.04 | 0.09 | 0.18 | 0.15 | 0.06 | 0.06 |
| s, saturation flow rate [veh/h] | 365 | 1583 | 465 | 1740 | 1827 | 1553 | 1740 | 1827 | 1655 |
| c, Capacity [veh/h] | 235 | 826 | 275 | 89 | 449 | 382 | 180 | 545 | 494 |
| d1, Uniform Delay [s] | 31.98 | 14.81 | 44.37 | 55.29 | 33.05 | 37.03 | 51.71 | 26.86 | 26.90 |
| k, delay calibration | 0.50 | 0.11 | 0.50 | 0.11 | 0.50 | 0.50 | 0.50 | 0.50 | 0.50 |
| I, Upstream Filtering Factor | 1.00 | 1.00 | 1.00 | 1.00 | 1.00 | 1.00 | 1.00 | 1.00 | 1.00 |
| d2, Incremental Delay [s] | 364.07 | 0.08 | 590.36 | 14.30 | 2.12 | 12.55 | 225.25 | 0.89 | 1.01 |
| d3, Initial Queue Delay [s] | 0.00 | 0.00 | 0.00 | 0.00 | 0.00 | 0.00 | 0.00 | 0.00 | 0.00 |
| Rp, platoon ratio | 1.00 | 1.00 | 1.00 | 1.33 | 1.33 | 1.33 | 1.33 | 1.33 | 1.33 |
| PF, progression factor | 1.00 | 1.00 | 1.00 | 1.00 | 1.00 | 1.00 | 1.00 | 1.00 | 1.00 |

**Lane Group Results**

| | | | | | | | | | |
|---|---|---|---|---|---|---|---|---|---|
| X, volume / capacity | 1.77 | 0.14 | 2.29 | 0.79 | 0.35 | 0.75 | 1.44 | 0.21 | 0.22 |
| d, Delay for Lane Group [s/veh] | 396.05 | 14.89 | 634.73 | 69.59 | 35.17 | 49.57 | 276.96 | 27.75 | 27.91 |
| Lane Group LOS | F | B | F | E | D | D | F | C | C |
| Critical Lane Group | No | No | Yes | No | No | Yes | Yes | No | No |
| 50th-Percentile Queue Length [veh] | 30.79 | 1.58 | 52.11 | 2.38 | 3.54 | 8.10 | 16.49 | 2.29 | 2.14 |
| 50th-Percentile Queue Length [ft] | 769.70 | 39.53 | 1302.83 | 59.44 | 88.59 | 202.52 | 412.18 | 57.17 | 53.49 |
| 95th-Percentile Queue Length [veh] | 53.08 | 2.85 | 90.19 | 4.28 | 6.38 | 12.77 | 26.21 | 4.12 | 3.85 |
| 95th-Percentile Queue Length [ft] | 1327.10 | 71.15 | 2254.74 | 106.99 | 159.46 | 319.22 | 655.32 | 102.90 | 96.28 |

**Movement, Approach, & Intersection Results**

| | | | | | | | | | | | | |
|---|---|---|---|---|---|---|---|---|---|---|---|---|
| d_M, Delay for Movement [s/veh] | 396.05 | 396.05 | 14.89 | 634.73 | 634.73 | 634.73 | 69.59 | 35.17 | 49.57 | 276.96 | 27.79 | 27.91 |
| Movement LOS | F | F | B | F | F | F | E | D | D | F | C | C |
| d_A, Approach Delay [s/veh] | 313.50 | | | 634.73 | | | 47.92 | | | 161.70 | | |
| Approach LOS | F | | | F | | | D | | | F | | |
| d_I, Intersection Delay [s/veh] | 310.33 | | | | | | | | | | | |
| Intersection LOS | F | | | | | | | | | | | |
| Intersection V/C | 1.873 | | | | | | | | | | | |

## Sequence

| | | | | | | | | | | | | | | | | |
|---|---|---|---|---|---|---|---|---|---|---|---|---|---|---|---|---|
| Ring 1 | 2 | 3 | 4 | - | - | - | - | - | - | - | - | - | - | - | - | - |
| Ring 2 | 6 | 7 | 8 | - | - | - | - | - | - | - | - | - | - | - | - | - |
| Ring 3 | - | - | - | - | - | - | - | - | - | - | - | - | - | - | - | - |
| Ring 4 | - | - | - | - | - | - | - | - | - | - | - | - | - | - | - | - |

**Intersection Level Of Service Report**
**Intersection 9: Locust Ave (NS) / Marygold Ave (EW)**

| | | | |
|---|---|---|---|
| Control Type: | All-way stop | Delay (sec / veh): | 11.0 |
| Analysis Method: | HCM 2010 | Level Of Service: | B |
| Analysis Period: | 15 minutes | | |

**Intersection Setup**

| Name | Locust Avenue | | | Locust Avenue | | | Marygold Avenue | | | | | |
|---|---|---|---|---|---|---|---|---|---|---|---|---|
| Approach | Northbound | | | Southbound | | | Eastbound | | | Westbound | | |
| Lane Configuration | | | | | | | | | | | | |
| Turning Movement | Left | Thru | Right | Left | Thru | Right | Left | Thru | Right | Left | Thru | Right |
| Lane Width [ft] | 12.00 | 12.00 | 12.00 | 12.00 | 12.00 | 12.00 | 12.00 | 12.00 | 12.00 | 12.00 | 12.00 | 12.00 |
| No. of Lanes in Pocket | 0 | 0 | 1 | 0 | 0 | 1 | 0 | 0 | 0 | 0 | 0 | 0 |
| Pocket Length [ft] | 100.00 | 100.00 | 100.00 | 100.00 | 100.00 | 325.00 | 100.00 | 100.00 | 100.00 | 100.00 | 100.00 | 100.00 |
| Speed [mph] | 30.00 | | | 40.00 | | | 30.00 | | | 30.00 | | |
| Grade [%] | 0.00 | | | 0.00 | | | 0.00 | | | 0.00 | | |
| Crosswalk | Yes | | | Yes | | | Yes | | | Yes | | |

**volumes**

| Name | Locust Avenue | | | Locust Avenue | | | Marygold Avenue | | | | | |
|---|---|---|---|---|---|---|---|---|---|---|---|---|
| Base Volume Input [veh/h] | 10 | 126 | 18 | 30 | 292 | 28 | 6 | 47 | 13 | 24 | 65 | 13 |
| Base Volume Adjustment Factor | 1.0000 | 1.0000 | 1.0000 | 1.0000 | 1.0000 | 1.0000 | 1.0000 | 1.0000 | 1.0000 | 1.0000 | 1.0000 | 1.0000 |
| Heavy Vehicles Percentage [%] | 2.00 | 2.00 | 2.00 | 2.00 | 2.00 | 2.00 | 2.00 | 2.00 | 2.00 | 2.00 | 2.00 | 2.00 |
| Growth Rate | 1.00 | 1.00 | 1.00 | 1.00 | 1.00 | 1.00 | 1.00 | 1.00 | 1.00 | 1.00 | 1.00 | 1.00 |
| In-Process Volume [veh/h] | 0 | 0 | 0 | 0 | 0 | 0 | 0 | 0 | 0 | 0 | 0 | 0 |
| Site-Generated Trips [veh/h] | 0 | 0 | 0 | 0 | 0 | 0 | 0 | 0 | 0 | 0 | 0 | 0 |
| Diverted Trips [veh/h] | 0 | 0 | 0 | 0 | 0 | 0 | 0 | 0 | 0 | 0 | 0 | 0 |
| Pass-by Trips [veh/h] | 0 | 0 | 0 | 0 | 0 | 0 | 0 | 0 | 0 | 0 | 0 | 0 |
| Existing Site Adjustment Volume [veh/h] | 0 | 0 | 0 | 0 | 0 | 0 | 0 | 0 | 0 | 0 | 0 | 0 |
| Other Volume [veh/h] | 0 | 0 | 0 | 0 | 0 | 0 | 0 | 0 | 0 | 0 | 0 | 0 |
| Total Hourly Volume [veh/h] | 10 | 126 | 18 | 30 | 292 | 28 | 6 | 47 | 13 | 24 | 65 | 13 |
| Peak Hour Factor | 0.9500 | 0.9500 | 0.9500 | 0.9500 | 0.9500 | 0.9500 | 0.9500 | 0.9500 | 0.9500 | 0.9500 | 0.9500 | 0.9500 |
| Other Adjustment Factor | 1.0000 | 1.0000 | 1.0000 | 1.0000 | 1.0000 | 1.0000 | 1.0000 | 1.0000 | 1.0000 | 1.0000 | 1.0000 | 1.0000 |
| Total 15-Minute Volume [veh/h] | 3 | 33 | 5 | 8 | 77 | 7 | 2 | 12 | 3 | 6 | 17 | 3 |
| Total Analysis Volume [veh/h] | 11 | 133 | 19 | 32 | 307 | 29 | 6 | 49 | 14 | 25 | 68 | 14 |
| Pedestrian Volume [ped/h] | 0 | | | 0 | | | 0 | | | 0 | | |

**Intersection Settings**

**Lanes**

**Movement, Approach, & Intersection Results**

| | | | | | | |
|---|---|---|---|---|---|---|
| 95th-Percentile Queue Length [veh] | 0.82 | 0.08 | 2.75 | 0.11 | 0.34 | 0.56 |
| 95th-Percentile Queue Length [ft] | 20.58 | 1.90 | 68.83 | 2.81 | 8.47 | 13.96 |
| Approach Delay [s/veh] | 9.39 | | 12.51 | | 8.92 | 9.31 |
| Approach LOS | A | | B | | A | A |
| Intersection Delay [s/veh] | 10.96 | | | | | |
| Intersection LOS | B | | | | | |

**Intersection Level Of Service Report**
**Intersection 10: Locust Ave (NS) / Valley Blvd (EW)**

| | | | |
|---|---|---|---|
| Control Type: | Signalized | Delay (sec / veh): | 32.5 |
| Analysis Method: | HCM 2010 | Level Of Service: | C |
| Analysis Period: | 15 minutes | Volume to Capacity (v/c): | 0.307 |

**Intersection Setup**

| Name | Locust Avenue | | | Locust Avenue | | | Valley Boulevard | | | Valley Boulevard | | |
|---|---|---|---|---|---|---|---|---|---|---|---|---|
| Approach | Northbound | | | Southbound | | | Eastbound | | | Westbound | | |
| Lane Configuration | | | | | | | | | | | | |
| Turning Movement | Left | Thru | Right | Left | Thru | Right | Left | Thru | Right | Left | Thru | Right |
| Lane Width [ft] | 12.00 | 12.00 | 12.00 | 12.00 | 12.00 | 12.00 | 12.00 | 12.00 | 12.00 | 12.00 | 12.00 | 12.00 |
| No. of Lanes in Pocket | 0 | 0 | 0 | 0 | 0 | 0 | 1 | 0 | 0 | 1 | 0 | 0 |
| Pocket Length [ft] | 100.00 | 100.00 | 100.00 | 100.00 | 100.00 | 100.00 | 100.00 | 100.00 | 100.00 | 200.00 | 100.00 | 100.00 |
| Speed [mph] | 30.00 | | | 40.00 | | | 45.00 | | | 45.00 | | |
| Grade [%] | 0.00 | | | 0.00 | | | 0.00 | | | 0.00 | | |
| Crosswalk | Yes | | | Yes | | | No | | | Yes | | |

**volumes**

| Name | Locust Avenue | | | Locust Avenue | | | Valley Boulevard | | | Valley Boulevard | | |
|---|---|---|---|---|---|---|---|---|---|---|---|---|
| Base Volume Input [veh/h] | 2 | 7 | 11 | 28 | 6 | 180 | 77 | 47 | 7 | 39 | 235 | 21 |
| Base Volume Adjustment Factor | 1.0000 | 1.0000 | 1.0000 | 1.0000 | 1.0000 | 1.0000 | 1.0000 | 1.0000 | 1.0000 | 1.0000 | 1.0000 | 1.0000 |
| Heavy Vehicles Percentage [%] | 2.00 | 2.00 | 2.00 | 2.00 | 2.00 | 2.00 | 4.00 | 4.00 | 4.00 | 4.00 | 4.00 | 4.00 |
| Growth Rate | 1.00 | 1.00 | 1.00 | 1.00 | 1.00 | 1.00 | 1.00 | 1.00 | 1.00 | 1.00 | 1.00 | 1.00 |
| In-Process Volume [veh/h] | 0 | 0 | 0 | 0 | 0 | 0 | 0 | 0 | 0 | 0 | 0 | 0 |
| Site-Generated Trips [veh/h] | 0 | 0 | 0 | 0 | 0 | 0 | 0 | 0 | 0 | 0 | 0 | 0 |
| Diverted Trips [veh/h] | 0 | 0 | 0 | 0 | 0 | 0 | 0 | 0 | 0 | 0 | 0 | 0 |
| Pass-by Trips [veh/h] | 0 | 0 | 0 | 0 | 0 | 0 | 0 | 0 | 0 | 0 | 0 | 0 |
| Existing Site Adjustment Volume [veh/h] | 0 | 0 | 0 | 0 | 0 | 0 | 0 | 0 | 0 | 0 | 0 | 0 |
| Other Volume [veh/h] | 0 | 0 | 0 | 0 | 0 | 0 | 0 | 0 | 0 | 0 | 0 | 0 |
| Right-Turn on Red Volume [veh/h] | 0 | 0 | 0 | 0 | 0 | 0 | 0 | 0 | 0 | 0 | 0 | 0 |
| Total Hourly Volume [veh/h] | 2 | 7 | 11 | 28 | 6 | 180 | 77 | 47 | 7 | 39 | 235 | 21 |
| Peak Hour Factor | 0.9100 | 0.9100 | 0.9100 | 0.9100 | 0.9100 | 0.9100 | 0.9100 | 0.9100 | 0.9100 | 0.9100 | 0.9100 | 0.9100 |
| Other Adjustment Factor | 1.0000 | 1.0000 | 1.0000 | 1.0000 | 1.0000 | 1.0000 | 1.0000 | 1.0000 | 1.0000 | 1.0000 | 1.0000 | 1.0000 |
| Total 15-Minute Volume [veh/h] | 1 | 2 | 3 | 8 | 2 | 49 | 21 | 13 | 2 | 11 | 65 | 6 |
| Total Analysis Volume [veh/h] | 2 | 8 | 12 | 31 | 7 | 198 | 85 | 52 | 8 | 43 | 258 | 23 |
| Presence of On-Street Parking | No | | No | No | | No | No | | No | No | | No |
| On-Street Parking Maneuver Rate [/h] | 0 | 0 | 0 | 0 | 0 | 0 | 0 | 0 | 0 | 0 | 0 | 0 |
| Local Bus Stopping Rate [/h] | 0 | 0 | 0 | 0 | 0 | 0 | 0 | 0 | 0 | 0 | 0 | 0 |
| Pedestrian Volume [ped/h] | 0 | | | 0 | | | 0 | | | 0 | | |
| Bicycle Volume [bicycles/h] | 0 | | | 0 | | | 0 | | | 0 | | |

**Intersection Settings**

| | |
|---|---|
| Located in CBD | No |
| Signal Coordination Group | 3 - EW - Valley |
| Cycle Length [s] | 120 |
| Coordination Type | Time of Day Pattern Coordinated |
| Actuation Type | Fully actuated |
| Offset [s] | 4.0 |
| Offset Reference | LagFO |
| Permissive Mode | SingleBand |
| Lost time [s] | 12.00 |

**Phasing & Timing**

| Control Type | Permiss | Permiss | Permiss | Permiss | Permiss | Permiss | Protecte | Permiss | Permiss | Protecte | Permiss | Permiss |
|---|---|---|---|---|---|---|---|---|---|---|---|---|
| Signal group | 0 | 2 | 0 | 0 | 6 | 0 | 3 | 8 | 0 | 7 | 4 | 0 |
| Auxiliary Signal Groups | | | | | | | | | | | | |
| Lead / Lag | - | - | - | - | - | - | Lead | - | - | Lead | - | - |
| Minimum Green [s] | 0 | 5 | 0 | 0 | 5 | 0 | 5 | 5 | 0 | 5 | 5 | 0 |
| Maximum Green [s] | 0 | 30 | 0 | 0 | 30 | 0 | 30 | 30 | 0 | 30 | 30 | 0 |
| Amber [s] | 0.0 | 3.7 | 0.0 | 0.0 | 4.4 | 0.0 | 4.8 | 4.8 | 0.0 | 4.8 | 4.8 | 0.0 |
| All red [s] | 0.0 | 1.0 | 0.0 | 0.0 | 1.0 | 0.0 | 1.0 | 1.0 | 0.0 | 1.0 | 1.0 | 0.0 |
| Split [s] | 0 | 56 | 0 | 0 | 56 | 0 | 23 | 43 | 0 | 21 | 41 | 0 |
| Vehicle Extension [s] | 0.0 | 3.0 | 0.0 | 0.0 | 3.0 | 0.0 | 3.0 | 3.0 | 0.0 | 3.0 | 3.0 | 0.0 |
| Walk [s] | 0 | 7 | 0 | 0 | 7 | 0 | 0 | 7 | 0 | 0 | 7 | 0 |
| Pedestrian Clearance [s] | 0 | 26 | 0 | 0 | 10 | 0 | 0 | 16 | 0 | 0 | 19 | 0 |
| I1, Start-Up Lost Time [s] | 0.0 | 2.0 | 0.0 | 0.0 | 2.0 | 0.0 | 2.0 | 2.0 | 0.0 | 2.0 | 2.0 | 0.0 |
| I2, Clearance Lost Time [s] | 0.0 | 2.7 | 0.0 | 0.0 | 3.4 | 0.0 | 3.8 | 3.8 | 0.0 | 3.8 | 3.8 | 0.0 |
| Minimum Recall | | No | | | No | | No | No | | No | No | |
| Maximum Recall | | No | | | No | | No | No | | No | No | |
| Pedestrian Recall | | No | | | No | | No | No | | No | No | |
| Detector Location [ft] | 0.0 | 0.0 | 0.0 | 0.0 | 0.0 | 0.0 | 0.0 | 0.0 | 0.0 | 0.0 | 0.0 | 0.0 |
| Detector Length [ft] | 0.0 | 0.0 | 0.0 | 0.0 | 0.0 | 0.0 | 0.0 | 0.0 | 0.0 | 0.0 | 0.0 | 0.0 |
| I, Upstream Filtering Factor | 1.00 | 1.00 | 1.00 | 1.00 | 1.00 | 1.00 | 1.00 | 1.00 | 1.00 | 1.00 | 1.00 | 1.00 |

**Exclusive Pedestrian Phase**

| | |
|---|---|
| Pedestrian Signal Group | 0 |
| Pedestrian Walk [s] | 0 |
| Pedestrian Clearance [s] | 0 |

**Lane Group Calculations**

| Lane Group | C | C | L | C | C | L | C | C |
|---|---|---|---|---|---|---|---|---|
| L, Total Lost Time per Cycle [s] | 4.70 | 5.40 | 5.80 | 5.80 | 5.80 | 5.80 | 5.80 | 5.80 |
| l1_p, Permitted Start-Up Lost Time [s] | 2.00 | 2.00 | 0.00 | 0.00 | 0.00 | 0.00 | 0.00 | 0.00 |
| l2, Clearance Lost Time [s] | 0.00 | 3.40 | 3.80 | 3.80 | 3.80 | 3.80 | 3.80 | 3.80 |
| g_i, Effective Green Time [s] | 21 | 20 | 7 | 79 | 79 | 4 | 75 | 75 |
| g / C, Green / Cycle | 0.17 | 0.17 | 0.06 | 0.66 | 0.66 | 0.03 | 0.63 | 0.63 |
| (v / s)_i Volume / Saturation Flow Rate | 0.01 | 0.15 | 0.05 | 0.02 | 0.02 | 0.02 | 0.08 | 0.08 |
| s, saturation flow rate [veh/h] | 1669 | 1581 | 1740 | 1827 | 1744 | 1740 | 1827 | 1775 |
| c, Capacity [veh/h] | 293 | 298 | 109 | 1203 | 1149 | 57 | 1148 | 1116 |
| d1, Uniform Delay [s] | 41.56 | 48.81 | 54.18 | 2.51 | 2.51 | 56.90 | 3.74 | 3.74 |
| k, delay calibration | 0.11 | 0.11 | 0.11 | 0.50 | 0.50 | 0.11 | 0.50 | 0.50 |
| I, Upstream Filtering Factor | 1.00 | 1.00 | 1.00 | 1.00 | 1.00 | 1.00 | 1.00 | 1.00 |
| d2, Incremental Delay [s] | 0.11 | 4.71 | 11.49 | 0.04 | 0.04 | 18.47 | 0.22 | 0.23 |
| d3, Initial Queue Delay [s] | 0.00 | 0.00 | 0.00 | 0.00 | 0.00 | 0.00 | 0.00 | 0.00 |
| Rp, platoon ratio | 1.00 | 1.00 | 1.33 | 1.33 | 1.33 | 1.33 | 1.33 | 1.33 |
| PF, progression factor | 1.00 | 1.00 | 1.00 | 1.00 | 1.00 | 1.00 | 1.00 | 1.00 |

**Lane Group Results**

| | | | | | | | | |
|---|---|---|---|---|---|---|---|---|
| X, volume / capacity | 0.07 | 0.79 | 0.78 | 0.03 | 0.03 | 0.76 | 0.12 | 0.12 |
| d, Delay for Lane Group [s/veh] | 41.66 | 53.52 | 65.67 | 2.55 | 2.55 | 75.37 | 3.96 | 3.97 |
| Lane Group LOS | D | D | E | A | A | E | A | A |
| Critical Lane Group | No | Yes | Yes | No | No | No | No | Yes |
| 50th-Percentile Queue Length [veh] | 0.56 | 7.16 | 2.76 | 0.10 | 0.10 | 1.54 | 0.63 | 0.62 |
| 50th-Percentile Queue Length [ft] | 13.97 | 178.98 | 69.09 | 2.43 | 2.42 | 38.53 | 15.81 | 15.62 |
| 95th-Percentile Queue Length [veh] | 1.01 | 11.55 | 4.97 | 0.18 | 0.17 | 2.77 | 1.14 | 1.12 |
| 95th-Percentile Queue Length [ft] | 25.14 | 288.68 | 124.36 | 4.38 | 4.35 | 69.35 | 28.46 | 28.11 |

**Movement, Approach, & Intersection Results**

| | | | | | | | | | | | | |
|---|---|---|---|---|---|---|---|---|---|---|---|---|
| d_M, Delay for Movement [s/veh] | 41.66 | 41.66 | 41.66 | 53.52 | 53.52 | 53.52 | 65.67 | 2.55 | 2.55 | 75.37 | 3.97 | 3.97 |
| Movement LOS | D | D | D | D | D | D | E | A | A | E | A | A |
| d_A, Approach Delay [s/veh] | 41.66 | | | 53.52 | | | 39.55 | | | 13.44 | | |
| Approach LOS | D | | | D | | | D | | | B | | |
| d_I, Intersection Delay [s/veh] | 32.51 | | | | | | | | | | | |
| Intersection LOS | C | | | | | | | | | | | |
| Intersection V/C | 0.307 | | | | | | | | | | | |

## Sequence

| | | | | | | | | | | | | | | | | |
|---|---|---|---|---|---|---|---|---|---|---|---|---|---|---|---|---|
| Ring 1 | 2 | 3 | 4 | - | - | - | - | - | - | - | - | - | - | - | - | - |
| Ring 2 | 6 | 7 | 8 | - | - | - | - | - | - | - | - | - | - | - | - | - |
| Ring 3 | - | - | - | - | - | - | - | - | - | - | - | - | - | - | - | - |
| Ring 4 | - | - | - | - | - | - | - | - | - | - | - | - | - | - | - | - |

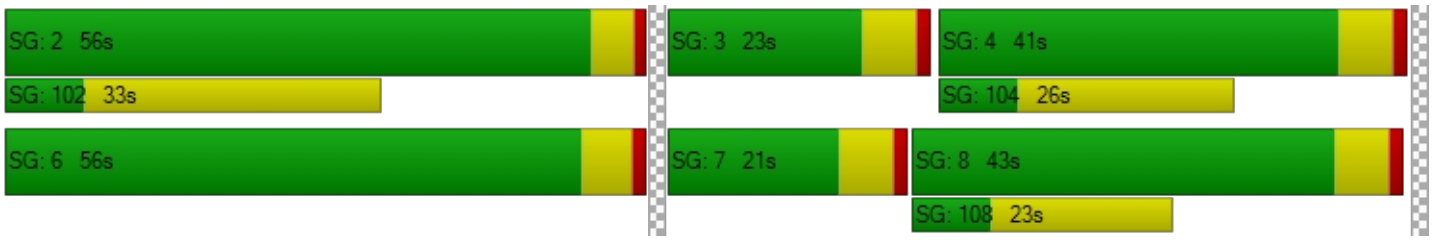

**Intersection Level Of Service Report**
**Intersection 11: Cedar Ave (NS) / San Bernardino Ave (EW)**

| | | | |
|---|---|---|---|
| Control Type: | Signalized | Delay (sec / veh): | 28.3 |
| Analysis Method: | HCM 2010 | Level Of Service: | C |
| Analysis Period: | 15 minutes | Volume to Capacity (v/c): | 0.669 |

**Intersection Setup**

| Name | Cedar Avenue | | | Cedar Avenue | | | | | | San Bernardino Avenue | | |
|---|---|---|---|---|---|---|---|---|---|---|---|---|
| Approach | Northbound | | | Southbound | | | Eastbound | | | Westbound | | |
| Lane Configuration | | | | | | | | | | | | |
| Turning Movement | Left | Thru | Right | Left | Thru | Right | Left | Thru | Right | Left | Thru | Right |
| Lane Width [ft] | 12.00 | 12.00 | 12.00 | 12.00 | 12.00 | 12.00 | 12.00 | 12.00 | 12.00 | 12.00 | 12.00 | 12.00 |
| No. of Lanes in Pocket | 1 | 0 | 0 | 1 | 0 | 0 | 1 | 0 | 1 | 1 | 0 | 0 |
| Pocket Length [ft] | 125.00 | 100.00 | 100.00 | 125.00 | 100.00 | 100.00 | 100.00 | 100.00 | 100.00 | 100.00 | 100.00 | 100.00 |
| Speed [mph] | 40.00 | | | 40.00 | | | 30.00 | | | 40.00 | | |
| Grade [%] | 0.00 | | | 0.00 | | | 0.00 | | | 0.00 | | |
| Crosswalk | Yes | | | Yes | | | Yes | | | Yes | | |

**volumes**

| Name | Cedar Avenue | | | Cedar Avenue | | | | | | San Bernardino Avenue | | |
|---|---|---|---|---|---|---|---|---|---|---|---|---|
| Base Volume Input [veh/h] | 96 | 664 | 37 | 64 | 997 | 46 | 35 | 228 | 104 | 87 | 197 | 56 |
| Base Volume Adjustment Factor | 1.0000 | 1.0000 | 1.0000 | 1.0000 | 1.0000 | 1.0000 | 1.0000 | 1.0000 | 1.0000 | 1.0000 | 1.0000 | 1.0000 |
| Heavy Vehicles Percentage [%] | 4.00 | 4.00 | 4.00 | 4.00 | 4.00 | 4.00 | 2.00 | 2.00 | 2.00 | 2.00 | 2.00 | 2.00 |
| Growth Rate | 1.00 | 1.00 | 1.00 | 1.00 | 1.00 | 1.00 | 1.00 | 1.00 | 1.00 | 1.00 | 1.00 | 1.00 |
| In-Process Volume [veh/h] | 0 | 0 | 0 | 0 | 0 | 0 | 0 | 0 | 0 | 0 | 0 | 0 |
| Site-Generated Trips [veh/h] | 0 | 0 | 0 | 0 | 0 | 0 | 0 | 0 | 0 | 0 | 0 | 0 |
| Diverted Trips [veh/h] | 0 | 0 | 0 | 0 | 0 | 0 | 0 | 0 | 0 | 0 | 0 | 0 |
| Pass-by Trips [veh/h] | 0 | 0 | 0 | 0 | 0 | 0 | 0 | 0 | 0 | 0 | 0 | 0 |
| Existing Site Adjustment Volume [veh/h] | 0 | 0 | 0 | 0 | 0 | 0 | 0 | 0 | 0 | 0 | 0 | 0 |
| Other Volume [veh/h] | 0 | 0 | 0 | 0 | 0 | 0 | 0 | 0 | 0 | 0 | 0 | 0 |
| Right-Turn on Red Volume [veh/h] | 0 | 0 | 0 | 0 | 0 | 0 | 0 | 0 | 0 | 0 | 0 | 0 |
| Total Hourly Volume [veh/h] | 96 | 664 | 37 | 64 | 997 | 46 | 35 | 228 | 104 | 87 | 197 | 56 |
| Peak Hour Factor | 0.8870 | 0.8870 | 0.8870 | 0.8870 | 0.8870 | 0.8870 | 0.8870 | 0.8870 | 0.8870 | 0.8870 | 0.8870 | 0.8870 |
| Other Adjustment Factor | 1.0000 | 1.0000 | 1.0000 | 1.0000 | 1.0000 | 1.0000 | 1.0000 | 1.0000 | 1.0000 | 1.0000 | 1.0000 | 1.0000 |
| Total 15-Minute Volume [veh/h] | 27 | 187 | 10 | 18 | 281 | 13 | 10 | 64 | 29 | 25 | 56 | 16 |
| Total Analysis Volume [veh/h] | 108 | 749 | 42 | 72 | 1124 | 52 | 39 | 257 | 117 | 98 | 222 | 63 |
| Presence of On-Street Parking | No | | No | No | | No | No | | No | No | | No |
| On-Street Parking Maneuver Rate [/h] | 0 | 0 | 0 | 0 | 0 | 0 | 0 | 0 | 0 | 0 | 0 | 0 |
| Local Bus Stopping Rate [/h] | 0 | 0 | 0 | 0 | 0 | 0 | 0 | 0 | 0 | 0 | 0 | 0 |
| Pedestrian Volume [ped/h] | 0 | | | 0 | | | 0 | | | 0 | | |
| Bicycle Volume [bicycles/h] | 0 | | | 0 | | | 0 | | | 0 | | |

**Intersection Settings**

| | |
|---|---|
| Located in CBD | No |
| Signal Coordination Group | 2 - NS - Cedar |
| Cycle Length [s] | 120 |
| Coordination Type | Time of Day Pattern Coordinated |
| Actuation Type | Fully actuated |
| Offset [s] | 0.0 |
| Offset Reference | LagFO |
| Permissive Mode | SingleBand |
| Lost time [s] | 16.00 |

**Phasing & Timing**

| Control Type | Protecte | Permiss | Permiss | Protecte | Permiss | Permiss | Protecte | Permiss | Permiss | Protecte | Permiss | Permiss |
|---|---|---|---|---|---|---|---|---|---|---|---|---|
| Signal group | 5 | 2 | 0 | 1 | 6 | 0 | 3 | 8 | 0 | 7 | 4 | 0 |
| Auxiliary Signal Groups | | | | | | | | | | | | |
| Lead / Lag | Lead | - | - | Lead | - | - | Lead | - | - | Lead | - | - |
| Minimum Green [s] | 5 | 5 | 0 | 5 | 5 | 0 | 5 | 5 | 0 | 5 | 5 | 0 |
| Maximum Green [s] | 30 | 30 | 0 | 30 | 30 | 0 | 30 | 30 | 0 | 30 | 30 | 0 |
| Amber [s] | 4.4 | 4.4 | 0.0 | 4.4 | 4.4 | 0.0 | 3.7 | 3.7 | 0.0 | 4.4 | 4.4 | 0.0 |
| All red [s] | 1.0 | 1.0 | 0.0 | 1.0 | 1.0 | 0.0 | 1.0 | 1.0 | 0.0 | 1.0 | 1.0 | 0.0 |
| Split [s] | 13 | 54 | 0 | 12 | 53 | 0 | 10 | 41 | 0 | 13 | 44 | 0 |
| Vehicle Extension [s] | 3.0 | 3.0 | 0.0 | 3.0 | 3.0 | 0.0 | 3.0 | 3.0 | 0.0 | 3.0 | 3.0 | 0.0 |
| Walk [s] | 0 | 7 | 0 | 0 | 7 | 0 | 0 | 7 | 0 | 0 | 7 | 0 |
| Pedestrian Clearance [s] | 0 | 24 | 0 | 0 | 24 | 0 | 0 | 29 | 0 | 0 | 29 | 0 |
| l1, Start-Up Lost Time [s] | 2.0 | 2.0 | 0.0 | 2.0 | 2.0 | 0.0 | 2.0 | 2.0 | 0.0 | 2.0 | 2.0 | 0.0 |
| l2, Clearance Lost Time [s] | 3.4 | 3.4 | 0.0 | 3.4 | 3.4 | 0.0 | 2.7 | 2.7 | 0.0 | 3.4 | 3.4 | 0.0 |
| Minimum Recall | No | No | | No | No | | No | No | | No | No | |
| Maximum Recall | No | No | | No | No | | No | No | | No | No | |
| Pedestrian Recall | No | No | | No | No | | No | No | | No | No | |
| Detector Location [ft] | 0.0 | 0.0 | 0.0 | 0.0 | 0.0 | 0.0 | 0.0 | 0.0 | 0.0 | 0.0 | 0.0 | 0.0 |
| Detector Length [ft] | 0.0 | 0.0 | 0.0 | 0.0 | 0.0 | 0.0 | 0.0 | 0.0 | 0.0 | 0.0 | 0.0 | 0.0 |
| I, Upstream Filtering Factor | 1.00 | 1.00 | 1.00 | 1.00 | 1.00 | 1.00 | 1.00 | 1.00 | 1.00 | 1.00 | 1.00 | 1.00 |

**Exclusive Pedestrian Phase**

| | |
|---|---|
| Pedestrian Signal Group | 0 |
| Pedestrian Walk [s] | 0 |
| Pedestrian Clearance [s] | 0 |

**Lane Group Calculations**

| Lane Group | L | C | C | L | C | C | L | C | R | L | C | C |
|---|---|---|---|---|---|---|---|---|---|---|---|---|
| L, Total Lost Time per Cycle [s] | 5.40 | 5.40 | 5.40 | 5.40 | 5.40 | 5.40 | 4.70 | 4.70 | 4.70 | 5.40 | 5.40 | 5.40 |
| l1_p, Permitted Start-Up Lost Time [s] | 0.00 | 0.00 | 0.00 | 0.00 | 0.00 | 0.00 | 0.00 | 0.00 | 0.00 | 0.00 | 0.00 | 0.00 |
| l2, Clearance Lost Time [s] | 3.40 | 3.40 | 3.40 | 3.40 | 3.40 | 3.40 | 2.70 | 2.70 | 2.70 | 3.40 | 3.40 | 3.40 |
| g_i, Effective Green Time [s] | 8 | 66 | 66 | 6 | 65 | 65 | 4 | 19 | 19 | 8 | 23 | 23 |
| g / C, Green / Cycle | 0.06 | 0.55 | 0.55 | 0.05 | 0.54 | 0.54 | 0.03 | 0.16 | 0.16 | 0.06 | 0.19 | 0.19 |
| (v / s)_i Volume / Saturation Flow Rate | 0.06 | 0.22 | 0.22 | 0.04 | 0.32 | 0.32 | 0.02 | 0.14 | 0.07 | 0.06 | 0.08 | 0.08 |
| s, saturation flow rate [veh/h] | 1740 | 1827 | 1793 | 1740 | 1827 | 1799 | 1774 | 1863 | 1583 | 1774 | 1863 | 1725 |
| c, Capacity [veh/h] | 111 | 1006 | 987 | 92 | 985 | 970 | 55 | 295 | 251 | 114 | 357 | 330 |
| d1, Uniform Delay [s] | 54.80 | 8.49 | 8.49 | 55.12 | 10.48 | 10.48 | 57.62 | 49.31 | 45.90 | 55.67 | 42.60 | 42.70 |
| k, delay calibration | 0.25 | 0.50 | 0.50 | 0.11 | 0.50 | 0.50 | 0.11 | 0.11 | 0.11 | 0.19 | 0.11 | 0.11 |
| I, Upstream Filtering Factor | 1.00 | 1.00 | 1.00 | 1.00 | 1.00 | 1.00 | 1.00 | 1.00 | 1.00 | 1.00 | 1.00 | 1.00 |
| d2, Incremental Delay [s] | 52.60 | 1.17 | 1.20 | 13.35 | 2.71 | 2.76 | 15.02 | 7.77 | 1.34 | 26.38 | 0.75 | 0.85 |
| d3, Initial Queue Delay [s] | 0.00 | 0.00 | 0.00 | 0.00 | 0.00 | 0.00 | 0.00 | 0.00 | 0.00 | 0.00 | 0.00 | 0.00 |
| Rp, platoon ratio | 1.33 | 1.33 | 1.33 | 1.33 | 1.33 | 1.33 | 1.00 | 1.00 | 1.00 | 1.00 | 1.00 | 1.00 |
| PF, progression factor | 1.00 | 1.00 | 1.00 | 1.00 | 1.00 | 1.00 | 1.00 | 1.00 | 1.00 | 1.00 | 1.00 | 1.00 |

**Lane Group Results**

| | | | | | | | | | | | | |
|---|---|---|---|---|---|---|---|---|---|---|---|---|
| X, volume / capacity | 0.97 | 0.40 | 0.40 | 0.78 | 0.60 | 0.60 | 0.70 | 0.87 | 0.47 | 0.86 | 0.41 | 0.42 |
| d, Delay for Lane Group [s/veh] | 107.40 | 9.67 | 9.69 | 68.47 | 13.19 | 13.24 | 72.64 | 57.08 | 47.24 | 82.06 | 43.35 | 43.55 |
| Lane Group LOS | F | A | A | E | B | B | E | E | D | F | D | D |
| Critical Lane Group | Yes | No | No | No | No | Yes | No | Yes | No | Yes | No | No |
| 50th-Percentile Queue Length [veh] | 4.76 | 3.47 | 3.42 | 2.42 | 6.13 | 6.05 | 1.40 | 8.14 | 3.27 | 3.72 | 3.82 | 3.65 |
| 50th-Percentile Queue Length [ft] | 119.02 | 86.86 | 85.41 | 60.56 | 153.20 | 151.37 | 35.12 | 203.60 | 81.86 | 93.12 | 95.45 | 91.25 |
| 95th-Percentile Queue Length [veh] | 8.34 | 6.25 | 6.15 | 4.36 | 10.19 | 10.09 | 2.53 | 12.82 | 5.89 | 6.70 | 6.87 | 6.57 |
| 95th-Percentile Queue Length [ft] | 208.48 | 156.35 | 153.74 | 109.02 | 254.69 | 252.25 | 63.22 | 320.61 | 147.36 | 167.61 | 171.81 | 164.25 |

**Movement, Approach, & Intersection Results**

| | | | | | | | | | | | | |
|---|---|---|---|---|---|---|---|---|---|---|---|---|
| d_M, Delay for Movement [s/veh] | 107.40 | 9.68 | 9.69 | 68.47 | 13.21 | 13.24 | 72.64 | 57.08 | 47.24 | 82.06 | 43.42 | 43.55 |
| Movement LOS | F | A | A | E | B | B | E | E | D | F | D | D |
| d_A, Approach Delay [s/veh] | 21.42 | | | 16.40 | | | 55.76 | | | 53.33 | | |
| Approach LOS | C | | | B | | | E | | | D | | |
| d_I, Intersection Delay [s/veh] | 28.26 | | | | | | | | | | | |
| Intersection LOS | C | | | | | | | | | | | |
| Intersection V/C | 0.669 | | | | | | | | | | | |

## Sequence

| | | | | | | | | | | | | | | | | |
|---|---|---|---|---|---|---|---|---|---|---|---|---|---|---|---|---|
| Ring 1 | 1 | 2 | 3 | 4 | - | - | - | - | - | - | - | - | - | - | - | - |
| Ring 2 | 5 | 6 | 7 | 8 | - | - | - | - | - | - | - | - | - | - | - | - |
| Ring 3 | - | - | - | - | - | - | - | - | - | - | - | - | - | - | - | - |
| Ring 4 | - | - | - | - | - | - | - | - | - | - | - | - | - | - | - | - |

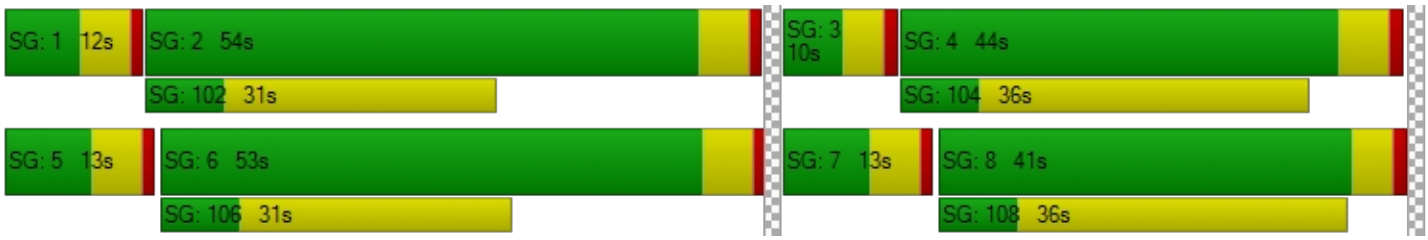

**Intersection Level Of Service Report**
**Intersection 12: Cedar Ave (NS) / Bloomington Ave (EW)**

| | | | |
|---|---|---|---|
| Control Type: | Signalized | Delay (sec / veh): | 18.7 |
| Analysis Method: | HCM 2010 | Level Of Service: | B |
| Analysis Period: | 15 minutes | Volume to Capacity (v/c): | 0.675 |

**Intersection Setup**

| Name | Cedar Avenue | | Cedar Avenue | | Bloomington Avenue | |
|---|---|---|---|---|---|---|
| Approach | Northbound | | Southbound | | Westbound | |
| Lane Configuration | | | | | | |
| Turning Movement | Thru | Right | Left | Thru | Left | Right |
| Lane Width [ft] | 12.00 | 12.00 | 12.00 | 12.00 | 12.00 | 12.00 |
| No. of Lanes in Pocket | 0 | 0 | 1 | 0 | 0 | 1 |
| Pocket Length [ft] | 100.00 | 100.00 | 100.00 | 100.00 | 100.00 | 125.00 |
| Speed [mph] | 40.00 | | 40.00 | | 45.00 | |
| Grade [%] | 0.00 | | 0.00 | | 0.00 | |
| Crosswalk | No | | Yes | | No | |

**volumes**

| Name | Cedar Avenue | | Cedar Avenue | | Bloomington Avenue | |
|---|---|---|---|---|---|---|
| Base Volume Input [veh/h] | 765 | 402 | 61 | 1249 | 733 | 68 |
| Base Volume Adjustment Factor | 1.0000 | 0.0000 | 1.0000 | 1.0000 | 1.0000 | 1.0000 |
| Heavy Vehicles Percentage [%] | 4.00 | 4.00 | 4.00 | 4.00 | 4.00 | 4.00 |
| Growth Rate | 1.00 | 1.00 | 1.00 | 1.00 | 1.00 | 1.00 |
| In-Process Volume [veh/h] | 0 | 0 | 0 | 0 | 0 | 0 |
| Site-Generated Trips [veh/h] | 0 | 0 | 0 | 0 | 0 | 0 |
| Diverted Trips [veh/h] | 0 | 0 | 0 | 0 | 0 | 0 |
| Pass-by Trips [veh/h] | 0 | 0 | 0 | 0 | 0 | 0 |
| Existing Site Adjustment Volume [veh/h] | 0 | 0 | 0 | 0 | 0 | 0 |
| Other Volume [veh/h] | 0 | 0 | 0 | 0 | 0 | 0 |
| Right-Turn on Red Volume [veh/h] | 0 | 0 | 0 | 0 | 0 | 0 |
| Total Hourly Volume [veh/h] | 765 | 0 | 61 | 1249 | 733 | 68 |
| Peak Hour Factor | 0.9480 | 0.9480 | 0.9480 | 0.9480 | 0.9480 | 0.9480 |
| Other Adjustment Factor | 1.0000 | 1.0000 | 1.0000 | 1.0000 | 1.0000 | 1.0000 |
| Total 15-Minute Volume [veh/h] | 202 | 0 | 16 | 329 | 193 | 18 |
| Total Analysis Volume [veh/h] | 807 | 0 | 64 | 1318 | 773 | 72 |
| Presence of On-Street Parking | No | No | No | No | No | No |
| On-Street Parking Maneuver Rate [/h] | 0 | 0 | 0 | 0 | 0 | 0 |
| Local Bus Stopping Rate [/h] | 0 | 0 | 0 | 0 | 0 | 0 |
| Pedestrian Volume [ped/h] | 0 | | 0 | | 0 | |
| Bicycle Volume [bicycles/h] | 0 | | 0 | | 0 | |

**Intersection Settings**

| | |
|---|---|
| Located in CBD | No |
| Signal Coordination Group | 2 - NS - Cedar |
| Cycle Length [s] | 120 |
| Coordination Type | Time of Day Pattern Coordinated |
| Actuation Type | Fully actuated |
| Offset [s] | 61.0 |
| Offset Reference | LagFO |
| Permissive Mode | SingleBand |
| Lost time [s] | 12.00 |

**Phasing & Timing**

| Control Type | Permissive | Permissive | Protected | Permissive | Split | Split |
|---|---|---|---|---|---|---|
| Signal group | 2 | 0 | 1 | 6 | 7 | 0 |
| Auxiliary Signal Groups | | | | | | |
| Lead / Lag | - | - | Lead | - | Lead | - |
| Minimum Green [s] | 5 | 0 | 5 | 5 | 5 | 0 |
| Maximum Green [s] | 30 | 0 | 30 | 30 | 30 | 0 |
| Amber [s] | 4.4 | 0.0 | 4.4 | 4.4 | 4.8 | 0.0 |
| All red [s] | 1.0 | 0.0 | 1.0 | 1.0 | 1.0 | 0.0 |
| Split [s] | 57 | 0 | 19 | 76 | 44 | 0 |
| Vehicle Extension [s] | 3.0 | 0.0 | 3.0 | 3.0 | 3.0 | 0.0 |
| Walk [s] | 7 | 0 | 0 | 7 | 7 | 0 |
| Pedestrian Clearance [s] | 10 | 0 | 0 | 10 | 23 | 0 |
| I1, Start-Up Lost Time [s] | 2.0 | 0.0 | 2.0 | 2.0 | 2.0 | 0.0 |
| I2, Clearance Lost Time [s] | 3.4 | 0.0 | 3.4 | 3.4 | 3.8 | 0.0 |
| Minimum Recall | No | | No | No | No | |
| Maximum Recall | No | | No | No | No | |
| Pedestrian Recall | No | | No | No | No | |
| Detector Location [ft] | 0.0 | 0.0 | 0.0 | 0.0 | 0.0 | 0.0 |
| Detector Length [ft] | 0.0 | 0.0 | 0.0 | 0.0 | 0.0 | 0.0 |
| I, Upstream Filtering Factor | 1.00 | 1.00 | 1.00 | 1.00 | 1.00 | 1.00 |

**Exclusive Pedestrian Phase**

| | |
|---|---|
| Pedestrian Signal Group | 0 |
| Pedestrian Walk [s] | 0 |
| Pedestrian Clearance [s] | 0 |

**Lane Group Calculations**

| Lane Group | C | C | R | L | C | L | R |
|---|---|---|---|---|---|---|---|
| L, Total Lost Time per Cycle [s] | 5.40 | 5.40 | 5.40 | 5.40 | 5.40 | 5.80 | 5.80 |
| l1_p, Permitted Start-Up Lost Time [s] | 0.00 | 0.00 | 0.00 | 0.00 | 0.00 | 0.00 | 0.00 |
| l2, Clearance Lost Time [s] | 3.40 | 3.40 | 3.40 | 3.40 | 3.40 | 3.80 | 3.80 |
| g_i, Effective Green Time [s] | 67 | 67 | 67 | 6 | 78 | 31 | 31 |
| g / C, Green / Cycle | 0.56 | 0.56 | 0.56 | 0.05 | 0.65 | 0.25 | 0.25 |
| (v / s)_i Volume / Saturation Flow Rate | 0.22 | 0.22 | 0.00 | 0.04 | 0.38 | 0.23 | 0.05 |
| s, saturation flow rate [veh/h] | 1827 | 1827 | 1553 | 1740 | 3478 | 3379 | 1553 |
| c, Capacity [veh/h] | 1023 | 1023 | 869 | 83 | 2269 | 859 | 395 |
| d1, Uniform Delay [s] | 7.90 | 7.90 | 0.00 | 55.55 | 3.49 | 43.24 | 34.97 |
| k, delay calibration | 0.50 | 0.50 | 0.50 | 0.11 | 0.50 | 0.11 | 0.11 |
| I, Upstream Filtering Factor | 1.00 | 1.00 | 1.00 | 1.00 | 1.00 | 1.00 | 1.00 |
| d2, Incremental Delay [s] | 1.14 | 1.14 | 0.00 | 14.24 | 1.09 | 3.75 | 0.22 |
| d3, Initial Queue Delay [s] | 0.00 | 0.00 | 0.00 | 0.00 | 0.00 | 0.00 | 0.00 |
| Rp, platoon ratio | 1.33 | 1.33 | 1.33 | 1.33 | 1.33 | 1.00 | 1.00 |
| PF, progression factor | 1.00 | 1.00 | 1.00 | 1.00 | 1.00 | 1.00 | 1.00 |

**Lane Group Results**

| | | | | | | | |
|---|---|---|---|---|---|---|---|
| X, volume / capacity | 0.39 | 0.39 | 0.00 | 0.78 | 0.58 | 0.90 | 0.18 |
| d, Delay for Lane Group [s/veh] | 9.04 | 9.04 | 0.00 | 69.79 | 4.59 | 46.99 | 35.19 |
| Lane Group LOS | A | A | A | E | A | D | D |
| Critical Lane Group | No | No | No | No | Yes | Yes | No |
| 50th-Percentile Queue Length [veh] | 3.34 | 3.34 | 0.00 | 2.18 | 2.72 | 11.11 | 1.63 |
| 50th-Percentile Queue Length [ft] | 83.46 | 83.46 | 0.00 | 54.56 | 68.01 | 277.82 | 40.77 |
| 95th-Percentile Queue Length [veh] | 6.01 | 6.01 | 0.00 | 3.93 | 4.90 | 16.58 | 2.94 |
| 95th-Percentile Queue Length [ft] | 150.24 | 150.24 | 0.00 | 98.20 | 122.42 | 414.50 | 73.39 |

**Movement, Approach, & Intersection Results**

| | | | | | | |
|---|---|---|---|---|---|---|
| d_M, Delay for Movement [s/veh] | 9.04 | 4.52 | 69.79 | 4.59 | 46.99 | 35.19 |
| Movement LOS | A | A | E | A | D | D |
| d_A, Approach Delay [s/veh] | 9.04 | | 7.61 | | 45.99 | |
| Approach LOS | A | | A | | D | |
| d_I, Intersection Delay [s/veh] | 18.68 | | | | | |
| Intersection LOS | B | | | | | |
| Intersection V/C | 0.675 | | | | | |

## Sequence

| | | | | | | | | | | | | | | | | |
|---|---|---|---|---|---|---|---|---|---|---|---|---|---|---|---|---|
| Ring 1 | 1 | 2 | - | - | - | - | - | - | - | - | - | - | - | - | - | - |
| Ring 2 | - | 6 | 7 | - | - | - | - | - | - | - | - | - | - | - | - | - |
| Ring 3 | - | - | - | - | - | - | - | - | - | - | - | - | - | - | - | - |
| Ring 4 | - | - | - | - | - | - | - | - | - | - | - | - | - | - | - | - |

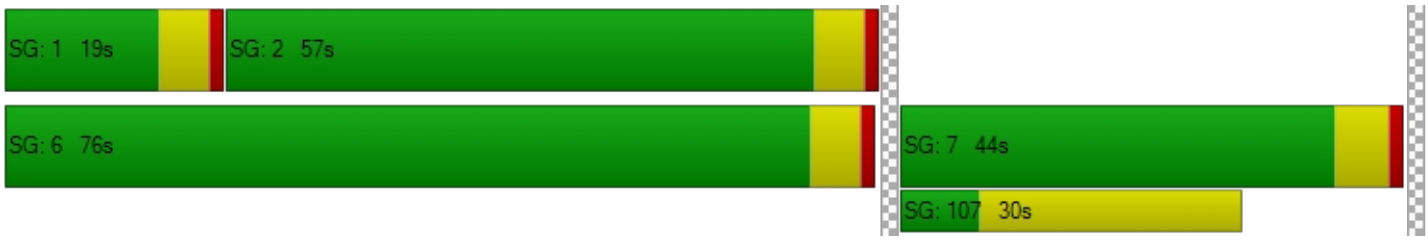

**Intersection Level Of Service Report**
**Intersection 13: Cedar Ave (NS) / Valley Blvd (EW)**

| | | | |
|---|---|---|---|
| Control Type: | Signalized | Delay (sec / veh): | 23.2 |
| Analysis Method: | HCM 2010 | Level Of Service: | C |
| Analysis Period: | 15 minutes | Volume to Capacity (v/c): | 0.736 |

**Intersection Setup**

| Name | Cedar Avenue | | | Cedar Avenue | | | | | | Valley Boulevard | | |
|---|---|---|---|---|---|---|---|---|---|---|---|---|
| Approach | Northbound | | | Southbound | | | Eastbound | | | Westbound | | |
| Lane Configuration | | | | | | | | | | | | |
| Turning Movement | Left | Thru | Right | Left | Thru | Right | Left | Thru | Right | Left | Thru | Right |
| Lane Width [ft] | 12.00 | 12.00 | 12.00 | 12.00 | 12.00 | 12.00 | 12.00 | 12.00 | 12.00 | 12.00 | 12.00 | 12.00 |
| No. of Lanes in Pocket | 2 | 0 | 1 | 2 | 0 | 0 | 2 | 0 | 1 | 2 | 0 | 0 |
| Pocket Length [ft] | 235.00 | 100.00 | 100.00 | 155.00 | 100.00 | 100.00 | 300.00 | 100.00 | 300.00 | 375.00 | 100.00 | 100.00 |
| Speed [mph] | 40.00 | | | 40.00 | | | 30.00 | | | 40.00 | | |
| Grade [%] | 0.00 | | | 0.00 | | | 0.00 | | | 0.00 | | |
| Crosswalk | Yes | | | Yes | | | Yes | | | Yes | | |

**volumes**

| Name | Cedar Avenue | | | Cedar Avenue | | | | | | Valley Boulevard | | |
|---|---|---|---|---|---|---|---|---|---|---|---|---|
| Base Volume Input [veh/h] | 91 | 1200 | 264 | 93 | 1885 | 53 | 33 | 127 | 319 | 410 | 160 | 51 |
| Base Volume Adjustment Factor | 1.0000 | 1.0000 | 1.0000 | 1.0000 | 1.0000 | 1.0000 | 1.0000 | 1.0000 | 1.0000 | 1.0000 | 1.0000 | 1.0000 |
| Heavy Vehicles Percentage [%] | 5.00 | 5.00 | 5.00 | 4.00 | 4.00 | 4.00 | 4.00 | 4.00 | 4.00 | 4.00 | 4.00 | 4.00 |
| Growth Rate | 1.00 | 1.00 | 1.00 | 1.00 | 1.00 | 1.00 | 1.00 | 1.00 | 1.00 | 1.00 | 1.00 | 1.00 |
| In-Process Volume [veh/h] | 0 | 0 | 0 | 0 | 0 | 0 | 0 | 0 | 0 | 0 | 0 | 0 |
| Site-Generated Trips [veh/h] | 0 | 0 | 0 | 0 | 0 | 0 | 0 | 0 | 0 | 0 | 0 | 0 |
| Diverted Trips [veh/h] | 0 | 0 | 0 | 0 | 0 | 0 | 0 | 0 | 0 | 0 | 0 | 0 |
| Pass-by Trips [veh/h] | 0 | 0 | 0 | 0 | 0 | 0 | 0 | 0 | 0 | 0 | 0 | 0 |
| Existing Site Adjustment Volume [veh/h] | 0 | 0 | 0 | 0 | 0 | 0 | 0 | 0 | 0 | 0 | 0 | 0 |
| Other Volume [veh/h] | 0 | 0 | 0 | 0 | 0 | 0 | 0 | 0 | 0 | 0 | 0 | 0 |
| Right-Turn on Red Volume [veh/h] | 0 | 0 | 0 | 0 | 0 | 0 | 0 | 0 | 0 | 0 | 0 | 0 |
| Total Hourly Volume [veh/h] | 91 | 1200 | 264 | 93 | 1885 | 53 | 33 | 127 | 319 | 410 | 160 | 51 |
| Peak Hour Factor | 0.9760 | 0.9760 | 0.9760 | 0.9760 | 0.9760 | 0.9760 | 0.9760 | 0.9760 | 0.9760 | 0.9760 | 0.9760 | 0.9760 |
| Other Adjustment Factor | 1.0000 | 1.0000 | 1.0000 | 1.0000 | 1.0000 | 1.0000 | 1.0000 | 1.0000 | 1.0000 | 1.0000 | 1.0000 | 1.0000 |
| Total 15-Minute Volume [veh/h] | 23 | 307 | 68 | 24 | 483 | 14 | 8 | 33 | 82 | 105 | 41 | 13 |
| Total Analysis Volume [veh/h] | 93 | 1230 | 270 | 95 | 1931 | 54 | 34 | 130 | 327 | 420 | 164 | 52 |
| Presence of On-Street Parking | No | | No | No | | No | No | | No | No | | No |
| On-Street Parking Maneuver Rate [/h] | 0 | 0 | 0 | 0 | 0 | 0 | 0 | 0 | 0 | 0 | 0 | 0 |
| Local Bus Stopping Rate [/h] | 0 | 0 | 0 | 0 | 0 | 0 | 0 | 0 | 0 | 0 | 0 | 0 |
| Pedestrian Volume [ped/h] | 0 | | | 0 | | | 0 | | | 0 | | |
| Bicycle Volume [bicycles/h] | 0 | | | 0 | | | 0 | | | 0 | | |

**Intersection Settings**

| | |
|---|---|
| Located in CBD | No |
| Signal Coordination Group | 2 - NS - Cedar |
| Cycle Length [s] | 120 |
| Coordination Type | Time of Day Pattern Coordinated |
| Actuation Type | Fully actuated |
| Offset [s] | 52.0 |
| Offset Reference | LagFO |
| Permissive Mode | SingleBand |
| Lost time [s] | 16.00 |

**Phasing & Timing**

| Control Type | Protecte | Permiss | Overlap | Protecte | Permiss | Permiss | Protecte | Permiss | Overlap | Protecte | Permiss | Permiss |
|---|---|---|---|---|---|---|---|---|---|---|---|---|
| Signal group | 5 | 2 | 2 | 1 | 6 | 0 | 3 | 8 | 8 | 7 | 4 | 0 |
| Auxiliary Signal Groups | | | 2,7 | | | | | | 5,8 | | | |
| Lead / Lag | Lead | - | - | Lead | - | - | Lead | - | - | Lead | - | - |
| Minimum Green [s] | 5 | 5 | 5 | 5 | 5 | 0 | 5 | 5 | 5 | 5 | 5 | 0 |
| Maximum Green [s] | 30 | 30 | 30 | 30 | 30 | 0 | 30 | 30 | 30 | 30 | 30 | 0 |
| Amber [s] | 4.4 | 4.4 | 4.4 | 4.4 | 4.4 | 0.0 | 3.7 | 3.7 | 3.7 | 4.4 | 4.4 | 0.0 |
| All red [s] | 1.0 | 1.0 | 1.0 | 1.0 | 1.0 | 0.0 | 1.0 | 1.0 | 1.0 | 1.0 | 1.0 | 0.0 |
| Split [s] | 11 | 49 | 49 | 38 | 49 | 0 | 10 | 22 | 22 | 19 | 50 | 0 |
| Vehicle Extension [s] | 3.0 | 3.0 | 3.0 | 3.0 | 3.0 | 0.0 | 3.0 | 3.0 | 3.0 | 3.0 | 3.0 | 0.0 |
| Walk [s] | 0 | 7 | 7 | 0 | 7 | 0 | 0 | 5 | 5 | 0 | 5 | 0 |
| Pedestrian Clearance [s] | 0 | 28 | 28 | 0 | 27 | 0 | 0 | 10 | 10 | 0 | 10 | 0 |
| I1, Start-Up Lost Time [s] | 2.0 | 2.0 | 2.0 | 2.0 | 2.0 | 0.0 | 2.0 | 2.0 | 2.0 | 2.0 | 2.0 | 0.0 |
| I2, Clearance Lost Time [s] | 3.4 | 3.4 | 3.4 | 3.4 | 3.4 | 0.0 | 2.7 | 2.7 | 2.7 | 3.4 | 3.4 | 0.0 |
| Minimum Recall | No | No | No | No | No | | No | No | No | No | No | |
| Maximum Recall | No | No | No | No | No | | No | No | No | No | No | |
| Pedestrian Recall | No | No | No | No | No | | No | No | No | No | No | |
| Detector Location [ft] | 0.0 | 0.0 | 0.0 | 0.0 | 0.0 | 0.0 | 0.0 | 0.0 | 0.0 | 0.0 | 0.0 | 0.0 |
| Detector Length [ft] | 0.0 | 0.0 | 0.0 | 0.0 | 0.0 | 0.0 | 0.0 | 0.0 | 0.0 | 0.0 | 0.0 | 0.0 |
| I, Upstream Filtering Factor | 1.00 | 1.00 | 1.00 | 1.00 | 1.00 | 1.00 | 1.00 | 1.00 | 1.00 | 1.00 | 1.00 | 1.00 |

**Exclusive Pedestrian Phase**

| | |
|---|---|
| Pedestrian Signal Group | 0 |
| Pedestrian Walk [s] | 0 |
| Pedestrian Clearance [s] | 0 |

**Lane Group Calculations**

| Lane Group | L | C | R | L | C | C | L | C | R | L | C | C |
|---|---|---|---|---|---|---|---|---|---|---|---|---|
| L, Total Lost Time per Cycle [s] | 5.40 | 5.40 | 5.40 | 5.40 | 5.40 | 5.40 | 4.70 | 4.70 | 5.40 | 5.40 | 5.40 | 5.40 |
| l1_p, Permitted Start-Up Lost Time [s] | 0.00 | 0.00 | 0.00 | 0.00 | 0.00 | 0.00 | 0.00 | 0.00 | 0.00 | 0.00 | 0.00 | 0.00 |
| l2, Clearance Lost Time [s] | 3.40 | 3.40 | 0.00 | 3.40 | 3.40 | 3.40 | 2.70 | 2.70 | 0.00 | 3.40 | 3.40 | 3.40 |
| g_i, Effective Green Time [s] | 6 | 64 | 88 | 5 | 64 | 64 | 3 | 11 | 22 | 18 | 26 | 26 |
| g / C, Green / Cycle | 0.05 | 0.53 | 0.73 | 0.04 | 0.53 | 0.53 | 0.03 | 0.10 | 0.18 | 0.15 | 0.22 | 0.22 |
| (v / s)_i Volume / Saturation Flow Rate | 0.03 | 0.36 | 0.18 | 0.03 | 0.38 | 0.38 | 0.01 | 0.07 | 0.12 | 0.12 | 0.06 | 0.06 |
| s, saturation flow rate [veh/h] | 3347 | 3445 | 1538 | 3379 | 3478 | 1802 | 3379 | 1827 | 2749 | 3379 | 1827 | 1679 |
| c, Capacity [veh/h] | 159 | 1838 | 1124 | 151 | 1846 | 956 | 99 | 174 | 500 | 515 | 399 | 367 |
| d1, Uniform Delay [s] | 55.10 | 11.51 | 0.43 | 55.48 | 12.10 | 12.12 | 56.59 | 50.99 | 42.06 | 46.24 | 35.25 | 35.27 |
| k, delay calibration | 0.11 | 0.50 | 0.50 | 0.11 | 0.50 | 0.50 | 0.11 | 0.11 | 0.34 | 0.11 | 0.11 | 0.11 |
| I, Upstream Filtering Factor | 1.00 | 1.00 | 1.00 | 1.00 | 1.00 | 1.00 | 1.00 | 1.00 | 1.00 | 1.00 | 1.00 | 1.00 |
| d2, Incremental Delay [s] | 3.40 | 1.96 | 0.51 | 4.22 | 2.32 | 4.45 | 2.06 | 6.19 | 4.46 | 3.22 | 0.38 | 0.42 |
| d3, Initial Queue Delay [s] | 0.00 | 0.00 | 0.00 | 0.00 | 0.00 | 0.00 | 0.00 | 0.00 | 0.00 | 0.00 | 0.00 | 0.00 |
| Rp, platoon ratio | 1.33 | 1.33 | 1.33 | 1.33 | 1.33 | 1.33 | 1.33 | 1.33 | 1.33 | 1.33 | 1.33 | 1.33 |
| PF, progression factor | 1.00 | 1.00 | 1.00 | 1.00 | 1.00 | 1.00 | 1.00 | 1.00 | 1.00 | 1.00 | 1.00 | 1.00 |

**Lane Group Results**

| | | | | | | | | | | | | |
|---|---|---|---|---|---|---|---|---|---|---|---|---|
| X, volume / capacity | 0.59 | 0.67 | 0.24 | 0.63 | 0.71 | 0.71 | 0.34 | 0.75 | 0.65 | 0.82 | 0.28 | 0.28 |
| d, Delay for Lane Group [s/veh] | 58.50 | 13.47 | 0.93 | 59.70 | 14.42 | 16.57 | 58.65 | 57.18 | 46.52 | 49.46 | 35.63 | 35.69 |
| Lane Group LOS | E | B | A | E | B | B | E | E | D | D | D | D |
| Critical Lane Group | Yes | No | No | No | No | Yes | No | No | Yes | Yes | No | No |
| 50th-Percentile Queue Length [veh] | 1.41 | 6.54 | 0.30 | 1.46 | 7.49 | 8.35 | 0.53 | 3.98 | 4.48 | 5.80 | 2.49 | 2.31 |
| 50th-Percentile Queue Length [ft] | 35.31 | 163.55 | 7.54 | 36.52 | 187.13 | 208.87 | 13.25 | 99.38 | 111.88 | 145.11 | 62.14 | 57.79 |
| 95th-Percentile Queue Length [veh] | 2.54 | 10.74 | 0.54 | 2.63 | 11.97 | 13.09 | 0.95 | 7.16 | 7.94 | 9.76 | 4.47 | 4.16 |
| 95th-Percentile Queue Length [ft] | 63.55 | 268.42 | 13.57 | 65.73 | 299.30 | 327.37 | 23.84 | 178.88 | 198.62 | 243.89 | 111.86 | 104.01 |

**Movement, Approach, & Intersection Results**

| | | | | | | | | | | | | |
|---|---|---|---|---|---|---|---|---|---|---|---|---|
| d_M, Delay for Movement [s/veh] | 58.50 | 13.47 | 0.93 | 59.70 | 15.12 | 16.57 | 58.65 | 57.18 | 46.52 | 49.46 | 35.65 | 35.69 |
| Movement LOS | E | B | A | E | B | B | E | E | D | D | D | D |
| d_A, Approach Delay [s/veh] | 13.97 | | | 17.19 | | | 50.18 | | | 44.77 | | |
| Approach LOS | B | | | B | | | D | | | D | | |
| d_I, Intersection Delay [s/veh] | 23.15 | | | | | | | | | | | |
| Intersection LOS | C | | | | | | | | | | | |
| Intersection V/C | 0.736 | | | | | | | | | | | |

## Sequence

| | | | | | | | | | | | | | | | | |
|---|---|---|---|---|---|---|---|---|---|---|---|---|---|---|---|---|
| Ring 1 | 1 | 2 | 3 | 4 | - | - | - | - | - | - | - | - | - | - | - | - |
| Ring 2 | 5 | 6 | 7 | 8 | - | - | - | - | - | - | - | - | - | - | - | - |
| Ring 3 | - | - | - | - | - | - | - | - | - | - | - | - | - | - | - | - |
| Ring 4 | - | - | - | - | - | - | - | - | - | - | - | - | - | - | - | - |

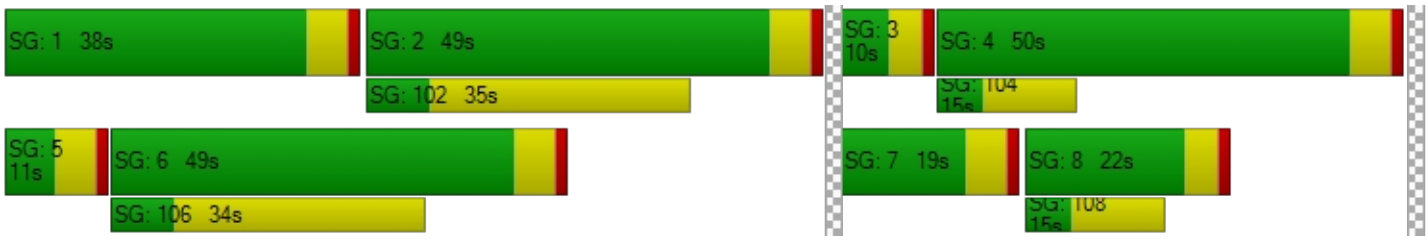

**Intersection Level Of Service Report**
**Intersection 14: Cedar Ave (NS) / I-10 Westbound Ramps (EW)**

| | | | |
|---|---|---|---|
| Control Type: | Signalized | Delay (sec / veh): | 119.6 |
| Analysis Method: | HCM 2010 | Level Of Service: | F |
| Analysis Period: | 15 minutes | Volume to Capacity (v/c): | 1.406 |

**Intersection Setup**

| Name | Cedar Avenue | | | Cedar Avenue | | | | | | I-10 Westbound Ramps | | |
|---|---|---|---|---|---|---|---|---|---|---|---|---|
| Approach | Northbound | | | Southbound | | | Eastbound | | | Westbound | | |
| Lane Configuration | | | | | | | | | | | | |
| Turning Movement | Left | Thru | Right | Left | Thru | Right | Left | Thru | Right | Left | Thru | Right |
| Lane Width [ft] | 12.00 | 12.00 | 12.00 | 12.00 | 12.00 | 12.00 | 12.00 | 12.00 | 12.00 | 12.00 | 12.00 | 12.00 |
| No. of Lanes in Pocket | 1 | 0 | 0 | 0 | 0 | 1 | 0 | 0 | 0 | 0 | 0 | 1 |
| Pocket Length [ft] | 305.00 | 100.00 | 100.00 | 100.00 | 100.00 | 100.00 | 100.00 | 100.00 | 100.00 | 100.00 | 100.00 | 485.00 |
| Speed [mph] | 40.00 | | | 40.00 | | | 30.00 | | | 30.00 | | |
| Grade [%] | 0.00 | | | 0.00 | | | 0.00 | | | 0.00 | | |
| Crosswalk | No | | | No | | | Yes | | | Yes | | |

**volumes**

| Name | Cedar Avenue | | | Cedar Avenue | | | | | | I-10 Westbound Ramps | | |
|---|---|---|---|---|---|---|---|---|---|---|---|---|
| Base Volume Input [veh/h] | 368 | 1175 | 0 | 0 | 1474 | 1132 | 0 | 0 | 0 | 368 | 1 | 367 |
| Base Volume Adjustment Factor | 1.0000 | 1.0000 | 1.0000 | 1.0000 | 1.0000 | 1.0000 | 1.0000 | 1.0000 | 1.0000 | 1.0000 | 1.0000 | 1.0000 |
| Heavy Vehicles Percentage [%] | 5.00 | 5.00 | 2.00 | 2.00 | 5.00 | 5.00 | 2.00 | 2.00 | 2.00 | 6.00 | 6.00 | 6.00 |
| Growth Rate | 1.00 | 1.00 | 1.00 | 1.00 | 1.00 | 1.00 | 1.00 | 1.00 | 1.00 | 1.00 | 1.00 | 1.00 |
| In-Process Volume [veh/h] | 0 | 0 | 0 | 0 | 0 | 0 | 0 | 0 | 0 | 0 | 0 | 0 |
| Site-Generated Trips [veh/h] | 0 | 0 | 0 | 0 | 0 | 0 | 0 | 0 | 0 | 0 | 0 | 0 |
| Diverted Trips [veh/h] | 0 | 0 | 0 | 0 | 0 | 0 | 0 | 0 | 0 | 0 | 0 | 0 |
| Pass-by Trips [veh/h] | 0 | 0 | 0 | 0 | 0 | 0 | 0 | 0 | 0 | 0 | 0 | 0 |
| Existing Site Adjustment Volume [veh/h] | 0 | 0 | 0 | 0 | 0 | 0 | 0 | 0 | 0 | 0 | 0 | 0 |
| Other Volume [veh/h] | 0 | 0 | 0 | 0 | 0 | 0 | 0 | 0 | 0 | 0 | 0 | 0 |
| Right-Turn on Red Volume [veh/h] | 0 | 0 | 0 | 0 | 0 | 0 | 0 | 0 | 0 | 0 | 0 | 0 |
| Total Hourly Volume [veh/h] | 368 | 1175 | 0 | 0 | 1474 | 1132 | 0 | 0 | 0 | 368 | 1 | 367 |
| Peak Hour Factor | 0.9350 | 0.9350 | 1.0000 | 1.0000 | 0.9350 | 0.9350 | 1.0000 | 1.0000 | 1.0000 | 0.9350 | 0.9350 | 0.9350 |
| Other Adjustment Factor | 1.0000 | 1.0000 | 1.0000 | 1.0000 | 1.0000 | 1.0000 | 1.0000 | 1.0000 | 1.0000 | 1.0000 | 1.0000 | 1.0000 |
| Total 15-Minute Volume [veh/h] | 98 | 314 | 0 | 0 | 394 | 303 | 0 | 0 | 0 | 98 | 0 | 98 |
| Total Analysis Volume [veh/h] | 394 | 1257 | 0 | 0 | 1576 | 1211 | 0 | 0 | 0 | 394 | 1 | 393 |
| Presence of On-Street Parking | No | | No | No | | No | | | | No | | No |
| On-Street Parking Maneuver Rate [/h] | 0 | 0 | 0 | 0 | 0 | 0 | 0 | 0 | 0 | 0 | 0 | 0 |
| Local Bus Stopping Rate [/h] | 0 | 0 | 0 | 0 | 0 | 0 | 0 | 0 | 0 | 0 | 0 | 0 |
| Pedestrian Volume [ped/h] | 0 | | | 0 | | | 0 | | | 0 | | |
| Bicycle Volume [bicycles/h] | 0 | | | 0 | | | 0 | | | 0 | | |

**Intersection Settings**

| | |
|---|---|
| Located in CBD | No |
| Signal Coordination Group | 2 - NS - Cedar |
| Cycle Length [s] | 120 |
| Coordination Type | Time of Day Pattern Coordinated |
| Actuation Type | Fully actuated |
| Offset [s] | 61.0 |
| Offset Reference | LagFO |
| Permissive Mode | SingleBand |
| Lost time [s] | 12.00 |

**Phasing & Timing**

| Control Type | Protecte | Permiss | Permiss | Permiss | Permiss | Permiss | Permiss | Permiss | Permiss | Permiss | Permiss | Permiss |
|---|---|---|---|---|---|---|---|---|---|---|---|---|
| Signal group | 5 | 2 | 0 | 0 | 6 | 0 | 0 | 0 | 0 | 0 | 4 | 0 |
| Auxiliary Signal Groups | | | | | | | | | | | | |
| Lead / Lag | Lead | - | - | - | - | - | - | - | - | - | - | - |
| Minimum Green [s] | 5 | 5 | 0 | 0 | 5 | 0 | 0 | 0 | 0 | 0 | 5 | 0 |
| Maximum Green [s] | 30 | 30 | 0 | 0 | 30 | 0 | 0 | 0 | 0 | 0 | 30 | 0 |
| Amber [s] | 4.4 | 4.4 | 0.0 | 0.0 | 4.4 | 0.0 | 0.0 | 0.0 | 0.0 | 0.0 | 3.7 | 0.0 |
| All red [s] | 1.0 | 1.0 | 0.0 | 0.0 | 1.0 | 0.0 | 0.0 | 0.0 | 0.0 | 0.0 | 1.0 | 0.0 |
| Split [s] | 23 | 89 | 0 | 0 | 66 | 0 | 0 | 0 | 0 | 0 | 31 | 0 |
| Vehicle Extension [s] | 3.0 | 3.0 | 0.0 | 0.0 | 3.0 | 0.0 | 0.0 | 0.0 | 0.0 | 0.0 | 3.0 | 0.0 |
| Walk [s] | 0 | 7 | 0 | 0 | 7 | 0 | 0 | 0 | 0 | 0 | 7 | 0 |
| Pedestrian Clearance [s] | 0 | 17 | 0 | 0 | 17 | 0 | 0 | 0 | 0 | 0 | 10 | 0 |
| I1, Start-Up Lost Time [s] | 2.0 | 2.0 | 0.0 | 0.0 | 2.0 | 0.0 | 0.0 | 0.0 | 0.0 | 0.0 | 2.0 | 0.0 |
| I2, Clearance Lost Time [s] | 3.4 | 3.4 | 0.0 | 0.0 | 3.4 | 0.0 | 0.0 | 0.0 | 0.0 | 0.0 | 2.7 | 0.0 |
| Minimum Recall | No | No | | | No | | | | | | No | |
| Maximum Recall | No | No | | | No | | | | | | No | |
| Pedestrian Recall | No | No | | | No | | | | | | No | |
| Detector Location [ft] | 0.0 | 0.0 | 0.0 | 0.0 | 0.0 | 0.0 | 0.0 | 0.0 | 0.0 | 0.0 | 0.0 | 0.0 |
| Detector Length [ft] | 0.0 | 0.0 | 0.0 | 0.0 | 0.0 | 0.0 | 0.0 | 0.0 | 0.0 | 0.0 | 0.0 | 0.0 |
| I, Upstream Filtering Factor | 1.00 | 1.00 | 1.00 | 1.00 | 1.00 | 1.00 | 1.00 | 1.00 | 1.00 | 1.00 | 1.00 | 1.00 |

**Exclusive Pedestrian Phase**

| | |
|---|---|
| Pedestrian Signal Group | 0 |
| Pedestrian Walk [s] | 0 |
| Pedestrian Clearance [s] | 0 |

**Lane Group Calculations**

| Lane Group | L | C | C | R | | C | R |
|---|---|---|---|---|---|---|---|
| L, Total Lost Time per Cycle [s] | 5.40 | 5.40 | 5.40 | 5.40 | | 4.70 | 4.70 |
| l1_p, Permitted Start-Up Lost Time [s] | 0.00 | 0.00 | 0.00 | 0.00 | | 0.00 | 0.00 |
| l2, Clearance Lost Time [s] | 3.40 | 3.40 | 3.40 | 3.40 | | 2.70 | 2.70 |
| g_i, Effective Green Time [s] | 18 | 84 | 61 | 61 | | 26 | 26 |
| g / C, Green / Cycle | 0.15 | 0.70 | 0.50 | 0.50 | | 0.22 | 0.22 |
| (v / s)_i Volume / Saturation Flow Rate | 0.23 | 0.36 | 0.32 | 0.79 | | 0.24 | 0.25 |
| s, saturation flow rate [veh/h] | 1723 | 3445 | 4929 | 1538 | | 1701 | 1524 |
| c, Capacity [veh/h] | 253 | 2400 | 2487 | 776 | | 373 | 334 |
| d1, Uniform Delay [s] | 51.17 | 8.70 | 21.64 | 29.72 | | 46.83 | 46.83 |
| k, delay calibration | 0.50 | 0.50 | 0.50 | 0.50 | | 0.49 | 0.50 |
| I, Upstream Filtering Factor | 1.00 | 1.00 | 1.00 | 1.00 | | 1.00 | 1.00 |
| d2, Incremental Delay [s] | 268.85 | 0.82 | 1.24 | 258.42 | | 73.90 | 91.98 |
| d3, Initial Queue Delay [s] | 0.00 | 0.00 | 0.00 | 0.00 | | 0.00 | 0.00 |
| Rp, platoon ratio | 1.00 | 1.00 | 1.00 | 1.00 | | 1.00 | 1.00 |
| PF, progression factor | 1.00 | 1.00 | 1.00 | 1.00 | | 1.00 | 1.00 |

**Lane Group Results**

| | | | | | | | |
|---|---|---|---|---|---|---|---|
| X, volume / capacity | 1.56 | 0.52 | 0.63 | 1.56 | | 1.09 | 1.14 |
| d, Delay for Lane Group [s/veh] | 320.02 | 9.52 | 22.88 | 288.13 | | 120.73 | 138.81 |
| Lane Group LOS | F | A | C | F | | F | F |
| Critical Lane Group | Yes | No | No | Yes | | No | Yes |
| 50th-Percentile Queue Length [veh] | 26.36 | 6.98 | 10.45 | 76.34 | | 18.71 | 18.44 |
| 50th-Percentile Queue Length [ft] | 658.88 | 174.43 | 261.35 | 1908.59 | | 467.73 | 460.94 |
| 95th-Percentile Queue Length [veh] | 41.12 | 11.31 | 15.76 | 118.41 | | 27.11 | 27.30 |
| 95th-Percentile Queue Length [ft] | 1028.01 | 282.73 | 393.91 | 2960.32 | | 677.79 | 682.43 |

**Movement, Approach, & Intersection Results**

| | | | | | | | | | | | | |
|---|---|---|---|---|---|---|---|---|---|---|---|---|
| d_M, Delay for Movement [s/veh] | 320.02 | 9.52 | 0.00 | 0.00 | 22.88 | 288.13 | 0.00 | 0.00 | 0.00 | 120.73 | 120.73 | 138.81 |
| Movement LOS | F | A | | | C | F | | | | F | F | F |
| d_A, Approach Delay [s/veh] | 83.62 | | | 138.14 | | | 0.00 | | | 129.45 | | |
| Approach LOS | F | | | F | | | A | | | F | | |
| d_I, Intersection Delay [s/veh] | 119.60 | | | | | | | | | | | |
| Intersection LOS | F | | | | | | | | | | | |
| Intersection V/C | 1.406 | | | | | | | | | | | |

## Sequence

| | | | | | | | | | | | | | | | | |
|---|---|---|---|---|---|---|---|---|---|---|---|---|---|---|---|---|
| Ring 1 | - | 2 | 4 | - | - | - | - | - | - | - | - | - | - | - | - | - |
| Ring 2 | 5 | 6 | - | - | - | - | - | - | - | - | - | - | - | - | - | - |
| Ring 3 | - | - | - | - | - | - | - | - | - | - | - | - | - | - | - | - |
| Ring 4 | - | - | - | - | - | - | - | - | - | - | - | - | - | - | - | - |

**Intersection Level Of Service Report**
**Intersection 15: Cedar Ave (NS) / I-10 Eastbound Ramps (EW)**

| | | | |
|---|---|---|---|
| Control Type: | Signalized | Delay (sec / veh): | 57.8 |
| Analysis Method: | HCM 2010 | Level Of Service: | E |
| Analysis Period: | 15 minutes | Volume to Capacity (v/c): | 1.014 |

**Intersection Setup**

| Name | Cedar Avenue | | | Cedar Avenue | | | | | | I-10 Eastbound Ramps | | |
|---|---|---|---|---|---|---|---|---|---|---|---|---|
| Approach | Northbound | | | Southbound | | | Eastbound | | | Westbound | | |
| Lane Configuration | | | | | | | | | | | | |
| Turning Movement | Left | Thru | Right | Left | Thru | Right | Left | Thru | Right | Left | Thru | Right |
| Lane Width [ft] | 12.00 | 12.00 | 12.00 | 12.00 | 12.00 | 12.00 | 12.00 | 12.00 | 12.00 | 12.00 | 12.00 | 12.00 |
| No. of Lanes in Pocket | 0 | 0 | 1 | 1 | 0 | 0 | 1 | 0 | 0 | 0 | 0 | 0 |
| Pocket Length [ft] | 100.00 | 100.00 | 555.00 | 305.00 | 100.00 | 100.00 | 340.00 | 100.00 | 100.00 | 100.00 | 100.00 | 100.00 |
| Speed [mph] | 40.00 | | | 40.00 | | | 30.00 | | | 30.00 | | |
| Grade [%] | 0.00 | | | 0.00 | | | 0.00 | | | 0.00 | | |
| Crosswalk | No | | | No | | | Yes | | | Yes | | |

**volumes**

| Name | Cedar Avenue | | | Cedar Avenue | | | | | | I-10 Eastbound Ramps | | |
|---|---|---|---|---|---|---|---|---|---|---|---|---|
| Base Volume Input [veh/h] | 0 | 967 | 372 | 511 | 1333 | 0 | 590 | 3 | 361 | 0 | 0 | 0 |
| Base Volume Adjustment Factor | 1.0000 | 1.0000 | 1.0000 | 1.0000 | 1.0000 | 1.0000 | 1.0000 | 1.0000 | 1.0000 | 1.0000 | 1.0000 | 1.0000 |
| Heavy Vehicles Percentage [%] | 2.00 | 5.00 | 5.00 | 5.00 | 5.00 | 2.00 | 6.00 | 6.00 | 6.00 | 2.00 | 2.00 | 2.00 |
| Growth Rate | 1.00 | 1.00 | 1.00 | 1.00 | 1.00 | 1.00 | 1.00 | 1.00 | 1.00 | 1.00 | 1.00 | 1.00 |
| In-Process Volume [veh/h] | 0 | 0 | 0 | 0 | 0 | 0 | 0 | 0 | 0 | 0 | 0 | 0 |
| Site-Generated Trips [veh/h] | 0 | 0 | 0 | 0 | 0 | 0 | 0 | 0 | 0 | 0 | 0 | 0 |
| Diverted Trips [veh/h] | 0 | 0 | 0 | 0 | 0 | 0 | 0 | 0 | 0 | 0 | 0 | 0 |
| Pass-by Trips [veh/h] | 0 | 0 | 0 | 0 | 0 | 0 | 0 | 0 | 0 | 0 | 0 | 0 |
| Existing Site Adjustment Volume [veh/h] | 0 | 0 | 0 | 0 | 0 | 0 | 0 | 0 | 0 | 0 | 0 | 0 |
| Other Volume [veh/h] | 0 | 0 | 0 | 0 | 0 | 0 | 0 | 0 | 0 | 0 | 0 | 0 |
| Right-Turn on Red Volume [veh/h] | 0 | 0 | 0 | 0 | 0 | 0 | 0 | 0 | 0 | 0 | 0 | 0 |
| Total Hourly Volume [veh/h] | 0 | 967 | 372 | 511 | 1333 | 0 | 590 | 3 | 361 | 0 | 0 | 0 |
| Peak Hour Factor | 1.0000 | 0.9240 | 0.9240 | 0.9240 | 0.9240 | 1.0000 | 0.9240 | 0.9240 | 0.9240 | 1.0000 | 1.0000 | 1.0000 |
| Other Adjustment Factor | 1.0000 | 1.0000 | 1.0000 | 1.0000 | 1.0000 | 1.0000 | 1.0000 | 1.0000 | 1.0000 | 1.0000 | 1.0000 | 1.0000 |
| Total 15-Minute Volume [veh/h] | 0 | 262 | 101 | 138 | 361 | 0 | 160 | 1 | 98 | 0 | 0 | 0 |
| Total Analysis Volume [veh/h] | 0 | 1047 | 403 | 553 | 1443 | 0 | 639 | 3 | 391 | 0 | 0 | 0 |
| Presence of On-Street Parking | No | | No | No | | No | No | | No | | | |
| On-Street Parking Maneuver Rate [/h] | 0 | 0 | 0 | 0 | 0 | 0 | 0 | 0 | 0 | 0 | 0 | 0 |
| Local Bus Stopping Rate [/h] | 0 | 0 | 0 | 0 | 0 | 0 | 0 | 0 | 0 | 0 | 0 | 0 |
| Pedestrian Volume [ped/h] | 0 | | | 0 | | | 0 | | | 0 | | |
| Bicycle Volume [bicycles/h] | 0 | | | 0 | | | 0 | | | 0 | | |

**Intersection Settings**

| | |
|---|---|
| Located in CBD | No |
| Signal Coordination Group | 2 - NS - Cedar |
| Cycle Length [s] | 120 |
| Coordination Type | Time of Day Pattern Coordinated |
| Actuation Type | Fully actuated |
| Offset [s] | 67.0 |
| Offset Reference | LagFO |
| Permissive Mode | SingleBand |
| Lost time [s] | 12.00 |

**Phasing & Timing**

| Control Type | Permiss | Permiss | Permiss | Protecte | Permiss | Permiss | Permiss | Permiss | Permiss | Permiss | Permiss | Permiss |
|---|---|---|---|---|---|---|---|---|---|---|---|---|
| Signal group | 0 | 2 | 0 | 1 | 6 | 0 | 0 | 8 | 0 | 0 | 0 | 0 |
| Auxiliary Signal Groups | | | | | | | | | | | | |
| Lead / Lag | - | - | - | Lead | - | - | - | - | - | - | - | - |
| Minimum Green [s] | 0 | 5 | 0 | 5 | 5 | 0 | 0 | 5 | 0 | 0 | 0 | 0 |
| Maximum Green [s] | 0 | 30 | 0 | 30 | 30 | 0 | 0 | 30 | 0 | 0 | 0 | 0 |
| Amber [s] | 0.0 | 4.4 | 0.0 | 4.4 | 4.4 | 0.0 | 0.0 | 3.7 | 0.0 | 0.0 | 0.0 | 0.0 |
| All red [s] | 0.0 | 1.0 | 0.0 | 1.0 | 1.0 | 0.0 | 0.0 | 1.0 | 0.0 | 0.0 | 0.0 | 0.0 |
| Split [s] | 0 | 34 | 0 | 43 | 77 | 0 | 0 | 43 | 0 | 0 | 0 | 0 |
| Vehicle Extension [s] | 0.0 | 3.0 | 0.0 | 3.0 | 3.0 | 0.0 | 0.0 | 3.0 | 0.0 | 0.0 | 0.0 | 0.0 |
| Walk [s] | 0 | 7 | 0 | 0 | 7 | 0 | 0 | 7 | 0 | 0 | 0 | 0 |
| Pedestrian Clearance [s] | 0 | 21 | 0 | 0 | 16 | 0 | 0 | 10 | 0 | 0 | 0 | 0 |
| I1, Start-Up Lost Time [s] | 0.0 | 2.0 | 0.0 | 2.0 | 2.0 | 0.0 | 0.0 | 2.0 | 0.0 | 0.0 | 0.0 | 0.0 |
| I2, Clearance Lost Time [s] | 0.0 | 3.4 | 0.0 | 3.4 | 3.4 | 0.0 | 0.0 | 2.7 | 0.0 | 0.0 | 0.0 | 0.0 |
| Minimum Recall | | No | | No | No | | | No | | | | |
| Maximum Recall | | No | | No | No | | | No | | | | |
| Pedestrian Recall | | No | | No | No | | | No | | | | |
| Detector Location [ft] | 0.0 | 0.0 | 0.0 | 0.0 | 0.0 | 0.0 | 0.0 | 0.0 | 0.0 | 0.0 | 0.0 | 0.0 |
| Detector Length [ft] | 0.0 | 0.0 | 0.0 | 0.0 | 0.0 | 0.0 | 0.0 | 0.0 | 0.0 | 0.0 | 0.0 | 0.0 |
| I, Upstream Filtering Factor | 1.00 | 1.00 | 1.00 | 1.00 | 1.00 | 1.00 | 1.00 | 1.00 | 1.00 | 1.00 | 1.00 | 1.00 |

**Exclusive Pedestrian Phase**

| | |
|---|---|
| Pedestrian Signal Group | 0 |
| Pedestrian Walk [s] | 0 |
| Pedestrian Clearance [s] | 0 |

**Lane Group Calculations**

| Lane Group | C | R | L | C | L | C | |
|---|---|---|---|---|---|---|---|
| L, Total Lost Time per Cycle [s] | 5.40 | 5.40 | 5.40 | 5.40 | 4.70 | 4.70 | |
| l1_p, Permitted Start-Up Lost Time [s] | 0.00 | 0.00 | 0.00 | 0.00 | 0.00 | 0.00 | |
| l2, Clearance Lost Time [s] | 3.40 | 3.40 | 3.40 | 3.40 | 2.70 | 2.70 | |
| g_i, Effective Green Time [s] | 29 | 29 | 38 | 72 | 38 | 38 | |
| g / C, Green / Cycle | 0.24 | 0.24 | 0.31 | 0.60 | 0.32 | 0.32 | |
| (v / s)_i Volume / Saturation Flow Rate | 0.21 | 0.26 | 0.32 | 0.42 | 0.30 | 0.33 | |
| s, saturation flow rate [veh/h] | 4929 | 1538 | 1723 | 3445 | 1707 | 1565 | |
| c, Capacity [veh/h] | 1177 | 367 | 540 | 2056 | 544 | 499 | |
| d1, Uniform Delay [s] | 44.12 | 45.65 | 41.20 | 16.77 | 39.89 | 40.85 | |
| k, delay calibration | 0.50 | 0.50 | 0.45 | 0.50 | 0.41 | 0.47 | |
| I, Upstream Filtering Factor | 1.00 | 1.00 | 1.00 | 1.00 | 1.00 | 1.00 | |
| d2, Incremental Delay [s] | 10.21 | 75.72 | 43.33 | 2.03 | 24.39 | 48.51 | |
| d3, Initial Queue Delay [s] | 0.00 | 0.00 | 0.00 | 0.00 | 0.00 | 0.00 | |
| Rp, platoon ratio | 1.00 | 1.00 | 1.00 | 1.00 | 1.00 | 1.00 | |
| PF, progression factor | 1.00 | 1.00 | 1.00 | 1.00 | 1.00 | 1.00 | |

**Lane Group Results**

| | | | | | | | |
|---|---|---|---|---|---|---|---|
| X, volume / capacity | 0.89 | 1.10 | 1.02 | 0.70 | 0.95 | 1.03 | |
| d, Delay for Lane Group [s/veh] | 54.34 | 121.37 | 84.52 | 18.80 | 64.28 | 89.35 | |
| Lane Group LOS | D | F | F | B | E | F | |
| Critical Lane Group | No | Yes | Yes | No | No | Yes | |
| 50th-Percentile Queue Length [veh] | 10.88 | 18.36 | 21.85 | 13.12 | 18.36 | 21.24 | |
| 50th-Percentile Queue Length [ft] | 271.97 | 458.96 | 546.23 | 327.95 | 458.95 | 530.96 | |
| 95th-Percentile Queue Length [veh] | 16.29 | 26.75 | 30.00 | 19.06 | 25.38 | 29.46 | |
| 95th-Percentile Queue Length [ft] | 407.20 | 668.79 | 750.12 | 476.44 | 634.62 | 736.54 | |

**Movement, Approach, & Intersection Results**

| | | | | | | | | | | | | |
|---|---|---|---|---|---|---|---|---|---|---|---|---|
| d_M, Delay for Movement [s/veh] | 0.00 | 54.34 | 121.37 | 84.52 | 18.80 | 0.00 | 69.08 | 89.35 | 89.35 | 0.00 | 0.00 | 0.00 |
| Movement LOS | | D | F | F | B | | E | F | F | | | |
| d_A, Approach Delay [s/veh] | 72.97 | | | 37.01 | | | 76.81 | | | 0.00 | | |
| Approach LOS | E | | | D | | | E | | | A | | |
| d_I, Intersection Delay [s/veh] | 57.83 | | | | | | | | | | | |
| Intersection LOS | E | | | | | | | | | | | |
| Intersection V/C | 1.014 | | | | | | | | | | | |

## Sequence

| | | | | | | | | | | | | | | | | |
|---|---|---|---|---|---|---|---|---|---|---|---|---|---|---|---|---|
| Ring 1 | 1 | 2 | - | - | - | - | - | - | - | - | - | - | - | - | - | - |
| Ring 2 | - | 6 | 8 | - | - | - | - | - | - | - | - | - | - | - | - | - |
| Ring 3 | - | - | - | - | - | - | - | - | - | - | - | - | - | - | - | - |
| Ring 4 | - | - | - | - | - | - | - | - | - | - | - | - | - | - | - | - |

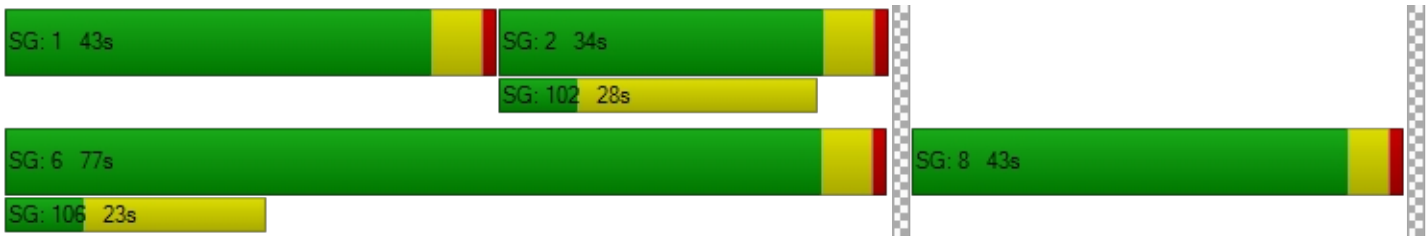

**Intersection Level Of Service Report**
**Intersection 16: Cedar Ave (NS) / Slover Ave (EW)**

| | | | |
|---|---|---|---|
| Control Type: | Signalized | Delay (sec / veh): | 34.3 |
| Analysis Method: | HCM 2010 | Level Of Service: | C |
| Analysis Period: | 15 minutes | Volume to Capacity (v/c): | 0.744 |

**Intersection Setup**

| Name | Cedar Avenue | | | Cedar Avenue | | | Slover Avenue | | | Slover Avenue | | |
|---|---|---|---|---|---|---|---|---|---|---|---|---|
| Approach | Northbound | | | Southbound | | | Eastbound | | | Westbound | | |
| Lane Configuration | | | | | | | | | | | | |
| Turning Movement | Left | Thru | Right | Left | Thru | Right | Left | Thru | Right | Left | Thru | Right |
| Lane Width [ft] | 12.00 | 12.00 | 12.00 | 12.00 | 12.00 | 12.00 | 12.00 | 12.00 | 12.00 | 12.00 | 12.00 | 12.00 |
| No. of Lanes in Pocket | 1 | 0 | 0 | 1 | 0 | 0 | 1 | 0 | 0 | 1 | 0 | 0 |
| Pocket Length [ft] | 200.00 | 100.00 | 100.00 | 85.00 | 100.00 | 100.00 | 185.00 | 100.00 | 100.00 | 150.00 | 100.00 | 100.00 |
| Speed [mph] | 45.00 | | | 45.00 | | | 50.00 | | | 50.00 | | |
| Grade [%] | 0.00 | | | 0.00 | | | 0.00 | | | 0.00 | | |
| Crosswalk | Yes | | | Yes | | | Yes | | | Yes | | |

**volumes**

| Name | Cedar Avenue | | | Cedar Avenue | | | Slover Avenue | | | Slover Avenue | | |
|---|---|---|---|---|---|---|---|---|---|---|---|---|
| Base Volume Input [veh/h] | 81 | 770 | 13 | 127 | 1015 | 196 | 131 | 207 | 119 | 44 | 179 | 35 |
| Base Volume Adjustment Factor | 1.0000 | 1.0000 | 1.0000 | 1.0000 | 1.0000 | 1.0000 | 1.0000 | 1.0000 | 1.0000 | 1.0000 | 1.0000 | 1.0000 |
| Heavy Vehicles Percentage [%] | 5.00 | 5.00 | 5.00 | 5.00 | 5.00 | 5.00 | 2.00 | 2.00 | 2.00 | 2.00 | 2.00 | 2.00 |
| Growth Rate | 1.00 | 1.00 | 1.00 | 1.00 | 1.00 | 1.00 | 1.00 | 1.00 | 1.00 | 1.00 | 1.00 | 1.00 |
| In-Process Volume [veh/h] | 0 | 0 | 0 | 0 | 0 | 0 | 0 | 0 | 0 | 0 | 0 | 0 |
| Site-Generated Trips [veh/h] | 0 | 0 | 0 | 0 | 0 | 0 | 0 | 0 | 0 | 0 | 0 | 0 |
| Diverted Trips [veh/h] | 0 | 0 | 0 | 0 | 0 | 0 | 0 | 0 | 0 | 0 | 0 | 0 |
| Pass-by Trips [veh/h] | 0 | 0 | 0 | 0 | 0 | 0 | 0 | 0 | 0 | 0 | 0 | 0 |
| Existing Site Adjustment Volume [veh/h] | 0 | 0 | 0 | 0 | 0 | 0 | 0 | 0 | 0 | 0 | 0 | 0 |
| Other Volume [veh/h] | 0 | 0 | 0 | 0 | 0 | 0 | 0 | 0 | 0 | 0 | 0 | 0 |
| Right-Turn on Red Volume [veh/h] | 0 | 0 | 0 | 0 | 0 | 0 | 0 | 0 | 0 | 0 | 0 | 0 |
| Total Hourly Volume [veh/h] | 81 | 770 | 13 | 127 | 1015 | 196 | 131 | 207 | 119 | 44 | 179 | 35 |
| Peak Hour Factor | 0.8589 | 0.8890 | 0.8890 | 0.8890 | 0.8890 | 0.8890 | 0.8890 | 0.8890 | 0.8890 | 0.8890 | 0.8890 | 0.8890 |
| Other Adjustment Factor | 1.0000 | 1.0000 | 1.0000 | 1.0000 | 1.0000 | 1.0000 | 1.0000 | 1.0000 | 1.0000 | 1.0000 | 1.0000 | 1.0000 |
| Total 15-Minute Volume [veh/h] | 24 | 217 | 4 | 36 | 285 | 55 | 37 | 58 | 33 | 12 | 50 | 10 |
| Total Analysis Volume [veh/h] | 94 | 866 | 15 | 143 | 1142 | 220 | 147 | 233 | 134 | 49 | 201 | 39 |
| Presence of On-Street Parking | No | | No | No | | No | No | | No | No | | No |
| On-Street Parking Maneuver Rate [/h] | 0 | 0 | 0 | 0 | 0 | 0 | 0 | 0 | 0 | 0 | 0 | 0 |
| Local Bus Stopping Rate [/h] | 0 | 0 | 0 | 0 | 0 | 0 | 0 | 0 | 0 | 0 | 0 | 0 |
| Pedestrian Volume [ped/h] | 0 | | | 0 | | | 0 | | | 0 | | |
| Bicycle Volume [bicycles/h] | 0 | | | 0 | | | 0 | | | 0 | | |

**Intersection Settings**

| | |
|---|---|
| Located in CBD | No |
| Signal Coordination Group | 2 - NS - Cedar |
| Cycle Length [s] | 120 |
| Coordination Type | Time of Day Pattern Coordinated |
| Actuation Type | Fully actuated |
| Offset [s] | 38.0 |
| Offset Reference | LagFO |
| Permissive Mode | SingleBand |
| Lost time [s] | 16.00 |

**Phasing & Timing**

| Control Type | Protecte | Permiss | Permiss | Protecte | Permiss | Permiss | Protecte | Permiss | Permiss | Protecte | Permiss | Overlap |
|---|---|---|---|---|---|---|---|---|---|---|---|---|
| Signal group | 5 | 2 | 0 | 1 | 6 | 0 | 3 | 8 | 0 | 7 | 4 | 4 |
| Auxiliary Signal Groups | | | | | | | | | | | | 1,4 |
| Lead / Lag | Lead | - | - | Lead | - | - | Lead | - | - | Lead | - | - |
| Minimum Green [s] | 5 | 5 | 0 | 5 | 5 | 0 | 5 | 5 | 0 | 5 | 5 | 5 |
| Maximum Green [s] | 30 | 30 | 0 | 30 | 30 | 0 | 30 | 30 | 0 | 30 | 30 | 30 |
| Amber [s] | 4.8 | 4.8 | 0.0 | 4.8 | 4.8 | 0.0 | 5.2 | 5.2 | 0.0 | 5.2 | 5.2 | 5.2 |
| All red [s] | 1.0 | 1.0 | 0.0 | 1.0 | 1.0 | 0.0 | 1.0 | 1.0 | 0.0 | 1.0 | 1.0 | 1.0 |
| Split [s] | 11 | 50 | 0 | 11 | 50 | 0 | 14 | 47 | 0 | 12 | 45 | 45 |
| Vehicle Extension [s] | 3.0 | 3.0 | 0.0 | 3.0 | 3.0 | 0.0 | 3.0 | 3.0 | 0.0 | 3.0 | 3.0 | 3.0 |
| Walk [s] | 0 | 7 | 0 | 0 | 7 | 0 | 0 | 7 | 0 | 0 | 7 | 7 |
| Pedestrian Clearance [s] | 0 | 31 | 0 | 0 | 20 | 0 | 0 | 26 | 0 | 0 | 31 | 31 |
| I1, Start-Up Lost Time [s] | 2.0 | 2.0 | 0.0 | 2.0 | 2.0 | 0.0 | 2.0 | 2.0 | 0.0 | 2.0 | 2.0 | 2.0 |
| I2, Clearance Lost Time [s] | 3.8 | 3.8 | 0.0 | 3.8 | 3.8 | 0.0 | 4.2 | 4.2 | 0.0 | 4.2 | 4.2 | 4.2 |
| Minimum Recall | No | No | | No | No | | No | No | | No | No | No |
| Maximum Recall | No | No | | No | No | | No | No | | No | No | No |
| Pedestrian Recall | No | No | | No | No | | No | No | | No | No | No |
| Detector Location [ft] | 0.0 | 0.0 | 0.0 | 0.0 | 0.0 | 0.0 | 0.0 | 0.0 | 0.0 | 0.0 | 0.0 | 0.0 |
| Detector Length [ft] | 0.0 | 0.0 | 0.0 | 0.0 | 0.0 | 0.0 | 0.0 | 0.0 | 0.0 | 0.0 | 0.0 | 0.0 |
| I, Upstream Filtering Factor | 1.00 | 1.00 | 1.00 | 1.00 | 1.00 | 1.00 | 1.00 | 1.00 | 1.00 | 1.00 | 1.00 | 1.00 |

**Exclusive Pedestrian Phase**

| | |
|---|---|
| Pedestrian Signal Group | 0 |
| Pedestrian Walk [s] | 0 |
| Pedestrian Clearance [s] | 0 |

**Lane Group Calculations**

| Lane Group | L | C | C | L | C | C | L | C | L | C | R |
|---|---|---|---|---|---|---|---|---|---|---|---|
| L, Total Lost Time per Cycle [s] | 5.80 | 5.80 | 5.80 | 5.80 | 5.80 | 5.80 | 6.20 | 6.20 | 6.20 | 6.20 | 5.80 |
| l1_p, Permitted Start-Up Lost Time [s] | 0.00 | 0.00 | 0.00 | 0.00 | 0.00 | 0.00 | 0.00 | 0.00 | 0.00 | 0.00 | 0.00 |
| l2, Clearance Lost Time [s] | 0.00 | 3.80 | 3.80 | 0.00 | 3.80 | 3.80 | 4.20 | 4.20 | 4.20 | 4.20 | 0.00 |
| g_i, Effective Green Time [s] | 70 | 61 | 61 | 70 | 60 | 60 | 8 | 27 | 4 | 24 | 34 |
| g / C, Green / Cycle | 0.58 | 0.51 | 0.51 | 0.58 | 0.50 | 0.50 | 0.07 | 0.23 | 0.04 | 0.20 | 0.28 |
| (v / s)_i Volume / Saturation Flow Rate | 0.17 | 0.24 | 0.24 | 0.20 | 0.38 | 0.39 | 0.08 | 0.21 | 0.03 | 0.11 | 0.02 |
| s, saturation flow rate [veh/h] | 552 | 1810 | 1799 | 730 | 1810 | 1710 | 1774 | 1750 | 1774 | 1863 | 1583 |
| c, Capacity [veh/h] | 299 | 912 | 907 | 437 | 895 | 846 | 117 | 400 | 64 | 371 | 446 |
| d1, Uniform Delay [s] | 15.60 | 12.09 | 12.09 | 7.68 | 15.79 | 15.98 | 56.10 | 45.24 | 57.35 | 43.18 | 31.74 |
| k, delay calibration | 0.50 | 0.50 | 0.50 | 0.50 | 0.50 | 0.50 | 0.37 | 0.14 | 0.11 | 0.11 | 0.11 |
| I, Upstream Filtering Factor | 1.00 | 1.00 | 1.00 | 1.00 | 1.00 | 1.00 | 1.00 | 1.00 | 1.00 | 1.00 | 1.00 |
| d2, Incremental Delay [s] | 2.73 | 1.84 | 1.85 | 1.99 | 6.53 | 7.37 | 158.36 | 11.07 | 16.56 | 1.23 | 0.08 |
| d3, Initial Queue Delay [s] | 0.00 | 0.00 | 0.00 | 0.00 | 0.00 | 0.00 | 0.00 | 0.00 | 0.00 | 0.00 | 0.00 |
| Rp, platoon ratio | 1.33 | 1.33 | 1.33 | 1.33 | 1.33 | 1.33 | 1.00 | 1.00 | 1.00 | 1.00 | 1.00 |
| PF, progression factor | 1.00 | 1.00 | 1.00 | 1.00 | 1.00 | 1.00 | 1.00 | 1.00 | 1.00 | 1.00 | 1.00 |

**Lane Group Results**

| | | | | | | | | | | | |
|---|---|---|---|---|---|---|---|---|---|---|---|
| X, volume / capacity | 0.31 | 0.48 | 0.48 | 0.33 | 0.78 | 0.79 | 1.26 | 0.92 | 0.76 | 0.54 | 0.09 |
| d, Delay for Lane Group [s/veh] | 18.33 | 13.93 | 13.94 | 9.67 | 22.33 | 23.35 | 214.46 | 56.31 | 73.90 | 44.42 | 31.83 |
| Lane Group LOS | B | B | B | A | C | C | F | E | E | D | C |
| Critical Lane Group | Yes | No | No | No | No | Yes | No | Yes | Yes | No | No |
| 50th-Percentile Queue Length [veh] | 0.76 | 4.96 | 4.93 | 1.06 | 10.95 | 10.85 | 8.54 | 11.42 | 1.73 | 5.29 | 0.82 |
| 50th-Percentile Queue Length [ft] | 18.92 | 124.03 | 123.36 | 26.51 | 273.80 | 271.35 | 213.46 | 285.48 | 43.14 | 132.30 | 20.43 |
| 95th-Percentile Queue Length [veh] | 1.36 | 8.61 | 8.58 | 1.91 | 16.38 | 16.26 | 14.29 | 16.96 | 3.11 | 9.06 | 1.47 |
| 95th-Percentile Queue Length [ft] | 34.06 | 215.35 | 214.43 | 47.72 | 409.49 | 406.43 | 357.15 | 424.02 | 77.64 | 226.62 | 36.77 |

**Movement, Approach, & Intersection Results**

| | | | | | | | | | | | | |
|---|---|---|---|---|---|---|---|---|---|---|---|---|
| d_M, Delay for Movement [s/veh] | 18.33 | 13.94 | 13.94 | 9.67 | 22.73 | 23.35 | 214.46 | 56.31 | 56.31 | 73.90 | 44.42 | 31.83 |
| Movement LOS | B | B | B | A | C | C | F | E | E | E | D | C |
| d_A, Approach Delay [s/veh] | 14.36 | | | 21.58 | | | 101.54 | | | 47.72 | | |
| Approach LOS | B | | | C | | | F | | | D | | |
| d_I, Intersection Delay [s/veh] | 34.26 | | | | | | | | | | | |
| Intersection LOS | C | | | | | | | | | | | |
| Intersection V/C | 0.744 | | | | | | | | | | | |

## Sequence

| | | | | | | | | | | | | | | | | |
|---|---|---|---|---|---|---|---|---|---|---|---|---|---|---|---|---|
| Ring 1 | 1 | 2 | 3 | 4 | - | - | - | - | - | - | - | - | - | - | - | - |
| Ring 2 | 5 | 6 | 7 | 8 | - | - | - | - | - | - | - | - | - | - | - | - |
| Ring 3 | - | - | - | - | - | - | - | - | - | - | - | - | - | - | - | - |
| Ring 4 | - | - | - | - | - | - | - | - | - | - | - | - | - | - | - | - |

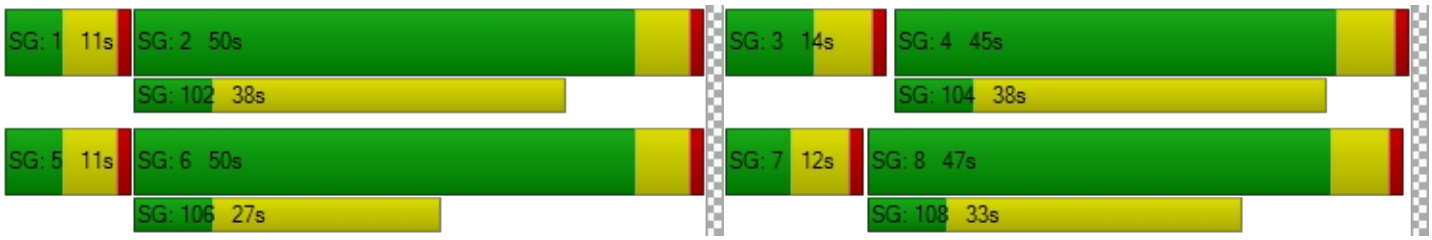

**Intersection Level Of Service Report**
**Intersection 1: Sierra Ave (NS) / San Bernardino Ave (EW)**

| | | | |
|---|---|---|---|
| Control Type: | Signalized | Delay (sec / veh): | 47.0 |
| Analysis Method: | HCM 2010 | Level Of Service: | D |
| Analysis Period: | 15 minutes | Volume to Capacity (v/c): | 0.838 |

**Intersection Setup**

| Name | Sierra Avenue | | | Sierra Avenue | | | San Bernardino Avenue | | | San Bernardino Avenue | | |
|---|---|---|---|---|---|---|---|---|---|---|---|---|
| Approach | Northbound | | | Southbound | | | Eastbound | | | Westbound | | |
| Lane Configuration | | | | | | | | | | | | |
| Turning Movement | Left | Thru | Right | Left | Thru | Right | Left | Thru | Right | Left | Thru | Right |
| Lane Width [ft] | 12.00 | 12.00 | 12.00 | 12.00 | 12.00 | 12.00 | 12.00 | 12.00 | 12.00 | 12.00 | 12.00 | 12.00 |
| No. of Lanes in Pocket | 1 | 0 | 1 | 1 | 0 | 0 | 1 | 0 | 0 | 1 | 0 | 0 |
| Pocket Length [ft] | 140.00 | 100.00 | 140.00 | 150.00 | 100.00 | 100.00 | 150.00 | 100.00 | 100.00 | 240.00 | 100.00 | 100.00 |
| Speed [mph] | 35.00 | | | 35.00 | | | 35.00 | | | 30.00 | | |
| Grade [%] | 0.00 | | | 0.00 | | | 0.00 | | | 0.00 | | |
| Crosswalk | Yes | | | Yes | | | Yes | | | Yes | | |

**volumes**

| Name | Sierra Avenue | | | Sierra Avenue | | | San Bernardino Avenue | | | San Bernardino Avenue | | |
|---|---|---|---|---|---|---|---|---|---|---|---|---|
| Base Volume Input [veh/h] | 246 | 1370 | 192 | 64 | 944 | 100 | 170 | 334 | 145 | 171 | 277 | 72 |
| Base Volume Adjustment Factor | 1.0000 | 1.0000 | 1.0000 | 1.0000 | 1.0000 | 1.0000 | 1.0000 | 1.0000 | 1.0000 | 1.0000 | 1.0000 | 1.0000 |
| Heavy Vehicles Percentage [%] | 2.00 | 2.00 | 2.00 | 2.00 | 2.00 | 2.00 | 2.00 | 2.00 | 2.00 | 2.00 | 2.00 | 2.00 |
| Growth Rate | 1.00 | 1.00 | 1.00 | 1.00 | 1.00 | 1.00 | 1.00 | 1.00 | 1.00 | 1.00 | 1.00 | 1.00 |
| In-Process Volume [veh/h] | 0 | 0 | 0 | 0 | 0 | 0 | 0 | 0 | 0 | 0 | 0 | 0 |
| Site-Generated Trips [veh/h] | 0 | 0 | 0 | 0 | 0 | 0 | 0 | 0 | 0 | 0 | 0 | 0 |
| Diverted Trips [veh/h] | 0 | 0 | 0 | 0 | 0 | 0 | 0 | 0 | 0 | 0 | 0 | 0 |
| Pass-by Trips [veh/h] | 0 | 0 | 0 | 0 | 0 | 0 | 0 | 0 | 0 | 0 | 0 | 0 |
| Existing Site Adjustment Volume [veh/h] | 0 | 0 | 0 | 0 | 0 | 0 | 0 | 0 | 0 | 0 | 0 | 0 |
| Other Volume [veh/h] | 0 | 0 | 0 | 0 | 0 | 0 | 0 | 0 | 0 | 0 | 0 | 0 |
| Right-Turn on Red Volume [veh/h] | 0 | 0 | 0 | 0 | 0 | 0 | 0 | 0 | 0 | 0 | 0 | 0 |
| Total Hourly Volume [veh/h] | 246 | 1370 | 192 | 64 | 944 | 100 | 170 | 334 | 145 | 171 | 277 | 72 |
| Peak Hour Factor | 0.9020 | 0.9020 | 0.9020 | 0.9020 | 0.9200 | 0.9020 | 0.9020 | 0.9020 | 0.9020 | 0.9020 | 0.9020 | 0.9020 |
| Other Adjustment Factor | 1.0000 | 1.0000 | 1.0000 | 1.0000 | 1.0000 | 1.0000 | 1.0000 | 1.0000 | 1.0000 | 1.0000 | 1.0000 | 1.0000 |
| Total 15-Minute Volume [veh/h] | 68 | 380 | 53 | 18 | 257 | 28 | 47 | 93 | 40 | 47 | 77 | 20 |
| Total Analysis Volume [veh/h] | 273 | 1519 | 213 | 71 | 1026 | 111 | 188 | 370 | 161 | 190 | 307 | 80 |
| Presence of On-Street Parking | No | | No | No | | No | No | | No | No | | No |
| On-Street Parking Maneuver Rate [/h] | 0 | 0 | 0 | 0 | 0 | 0 | 0 | 0 | 0 | 0 | 0 | 0 |
| Local Bus Stopping Rate [/h] | 0 | 0 | 0 | 0 | 0 | 0 | 0 | 0 | 0 | 0 | 0 | 0 |
| Pedestrian Volume [ped/h] | 0 | | | 0 | | | 0 | | | 0 | | |
| Bicycle Volume [bicycles/h] | 0 | | | 0 | | | 0 | | | 0 | | |

**Intersection Settings**

| | |
|---|---|
| Located in CBD | No |
| Signal Coordination Group | 1 - NS - Sierra |
| Cycle Length [s] | 120 |
| Coordination Type | Time of Day Pattern Coordinated |
| Actuation Type | Fully actuated |
| Offset [s] | 0.0 |
| Offset Reference | LagFO |
| Permissive Mode | SingleBand |
| Lost time [s] | 16.00 |

**Phasing & Timing**

| Control Type | Protecte | Permiss | Permiss | Protecte | Permiss | Permiss | Protecte | Permiss | Permiss | Protecte | Permiss | Permiss |
|---|---|---|---|---|---|---|---|---|---|---|---|---|
| Signal group | 5 | 2 | 0 | 1 | 6 | 0 | 3 | 8 | 0 | 7 | 4 | 0 |
| Auxiliary Signal Groups | | | | | | | | | | | | |
| Lead / Lag | Lead | - | - | Lead | - | - | Lead | - | - | Lead | - | - |
| Minimum Green [s] | 5 | 5 | 0 | 5 | 5 | 0 | 5 | 5 | 0 | 5 | 5 | 0 |
| Maximum Green [s] | 30 | 30 | 0 | 30 | 30 | 0 | 30 | 30 | 0 | 30 | 30 | 0 |
| Amber [s] | 4.1 | 4.1 | 0.0 | 4.1 | 4.1 | 0.0 | 4.1 | 4.1 | 0.0 | 3.7 | 3.7 | 0.0 |
| All red [s] | 1.0 | 1.0 | 0.0 | 1.0 | 1.0 | 0.0 | 1.0 | 1.0 | 0.0 | 1.0 | 1.0 | 0.0 |
| Split [s] | 20 | 52 | 0 | 11 | 43 | 0 | 19 | 41 | 0 | 16 | 38 | 0 |
| Vehicle Extension [s] | 3.0 | 3.0 | 0.0 | 3.0 | 3.0 | 0.0 | 3.0 | 3.0 | 0.0 | 3.0 | 3.0 | 0.0 |
| Walk [s] | 0 | 7 | 0 | 0 | 7 | 0 | 0 | 7 | 0 | 0 | 7 | 0 |
| Pedestrian Clearance [s] | 0 | 22 | 0 | 0 | 23 | 0 | 0 | 28 | 0 | 0 | 25 | 0 |
| I1, Start-Up Lost Time [s] | 2.0 | 2.0 | 0.0 | 2.0 | 2.0 | 0.0 | 2.0 | 2.0 | 0.0 | 2.0 | 2.0 | 0.0 |
| I2, Clearance Lost Time [s] | 3.1 | 3.1 | 0.0 | 3.1 | 3.1 | 0.0 | 3.1 | 3.1 | 0.0 | 2.7 | 2.7 | 0.0 |
| Minimum Recall | No | No | | No | No | | No | No | | No | No | |
| Maximum Recall | No | No | | No | No | | No | No | | No | No | |
| Pedestrian Recall | No | No | | No | No | | No | No | | No | No | |
| Detector Location [ft] | 0.0 | 0.0 | 0.0 | 0.0 | 0.0 | 0.0 | 0.0 | 0.0 | 0.0 | 0.0 | 0.0 | 0.0 |
| Detector Length [ft] | 0.0 | 0.0 | 0.0 | 0.0 | 0.0 | 0.0 | 0.0 | 0.0 | 0.0 | 0.0 | 0.0 | 0.0 |
| I, Upstream Filtering Factor | 1.00 | 1.00 | 1.00 | 1.00 | 1.00 | 1.00 | 1.00 | 1.00 | 1.00 | 1.00 | 1.00 | 1.00 |

**Exclusive Pedestrian Phase**

| | |
|---|---|
| Pedestrian Signal Group | 0 |
| Pedestrian Walk [s] | 0 |
| Pedestrian Clearance [s] | 0 |

**Lane Group Calculations**

| Lane Group | L | C | R | L | C | C | L | C | C | L | C | C |
|---|---|---|---|---|---|---|---|---|---|---|---|---|
| L, Total Lost Time per Cycle [s] | 5.10 | 5.10 | 5.10 | 5.10 | 5.10 | 5.10 | 5.10 | 5.10 | 5.10 | 4.70 | 4.70 | 4.70 |
| l1_p, Permitted Start-Up Lost Time [s] | 0.00 | 0.00 | 0.00 | 0.00 | 0.00 | 0.00 | 0.00 | 0.00 | 0.00 | 0.00 | 0.00 | 0.00 |
| l2, Clearance Lost Time [s] | 3.10 | 3.10 | 3.10 | 3.10 | 3.10 | 3.10 | 3.10 | 3.10 | 3.10 | 2.70 | 2.70 | 2.70 |
| g_i, Effective Green Time [s] | 15 | 62 | 62 | 6 | 53 | 53 | 14 | 21 | 21 | 11 | 18 | 18 |
| g / C, Green / Cycle | 0.12 | 0.52 | 0.52 | 0.05 | 0.44 | 0.44 | 0.12 | 0.17 | 0.17 | 0.09 | 0.15 | 0.15 |
| (v / s)_i Volume / Saturation Flow Rate | 0.15 | 0.43 | 0.13 | 0.04 | 0.31 | 0.31 | 0.11 | 0.15 | 0.15 | 0.11 | 0.11 | 0.11 |
| s, saturation flow rate [veh/h] | 1774 | 3547 | 1583 | 1774 | 1863 | 1800 | 1774 | 1863 | 1674 | 1774 | 1863 | 1732 |
| c, Capacity [veh/h] | 221 | 1828 | 816 | 89 | 821 | 793 | 206 | 323 | 290 | 168 | 283 | 263 |
| d1, Uniform Delay [s] | 50.07 | 14.98 | 10.07 | 55.46 | 19.25 | 19.27 | 52.45 | 48.23 | 48.29 | 54.35 | 48.36 | 48.43 |
| k, delay calibration | 0.50 | 0.50 | 0.50 | 0.13 | 0.50 | 0.50 | 0.30 | 0.11 | 0.11 | 0.44 | 0.11 | 0.11 |
| I, Upstream Filtering Factor | 1.00 | 1.00 | 1.00 | 1.00 | 1.00 | 1.00 | 1.00 | 1.00 | 1.00 | 1.00 | 1.00 | 1.00 |
| d2, Incremental Delay [s] | 138.55 | 4.57 | 0.78 | 18.36 | 5.02 | 5.22 | 30.70 | 6.80 | 7.81 | 104.40 | 3.20 | 3.57 |
| d3, Initial Queue Delay [s] | 0.00 | 0.00 | 0.00 | 0.00 | 0.00 | 0.00 | 0.00 | 0.00 | 0.00 | 0.00 | 0.00 | 0.00 |
| Rp, platoon ratio | 1.33 | 1.33 | 1.33 | 1.33 | 1.33 | 1.33 | 1.00 | 1.00 | 1.00 | 1.00 | 1.00 | 1.00 |
| PF, progression factor | 1.00 | 1.00 | 1.00 | 1.00 | 1.00 | 1.00 | 1.00 | 1.00 | 1.00 | 1.00 | 1.00 | 1.00 |

**Lane Group Results**

| | | | | | | | | | | | | |
|---|---|---|---|---|---|---|---|---|---|---|---|---|
| X, volume / capacity | 1.24 | 0.83 | 0.26 | 0.80 | 0.70 | 0.71 | 0.91 | 0.86 | 0.87 | 1.13 | 0.70 | 0.71 |
| d, Delay for Lane Group [s/veh] | 188.61 | 19.55 | 10.85 | 73.82 | 24.27 | 24.49 | 83.15 | 55.03 | 56.10 | 158.75 | 51.56 | 52.00 |
| Lane Group LOS | F | B | B | E | C | C | F | E | E | F | D | D |
| Critical Lane Group | No | Yes | No | Yes | No | No | No | No | Yes | Yes | No | No |
| 50th-Percentile Queue Length [veh] | 14.78 | 12.23 | 2.13 | 2.53 | 10.58 | 10.30 | 7.30 | 8.63 | 7.89 | 9.94 | 5.92 | 5.61 |
| 50th-Percentile Queue Length [ft] | 369.45 | 305.76 | 53.35 | 63.18 | 264.52 | 257.46 | 182.58 | 215.66 | 197.34 | 248.54 | 148.09 | 140.13 |
| 95th-Percentile Queue Length [veh] | 22.97 | 17.97 | 3.84 | 4.55 | 15.92 | 15.56 | 11.74 | 13.44 | 12.50 | 15.82 | 9.92 | 9.49 |
| 95th-Percentile Queue Length [ft] | 574.15 | 449.14 | 96.03 | 113.73 | 397.89 | 389.03 | 293.38 | 336.08 | 312.53 | 395.56 | 247.88 | 237.20 |

**Movement, Approach, & Intersection Results**

| | | | | | | | | | | | | |
|---|---|---|---|---|---|---|---|---|---|---|---|---|
| d_M, Delay for Movement [s/veh] | 188.61 | 19.55 | 10.85 | 73.82 | 24.37 | 24.49 | 83.15 | 55.30 | 56.10 | 158.75 | 51.71 | 52.00 |
| Movement LOS | F | B | B | E | C | C | F | E | E | F | D | D |
| d_A, Approach Delay [s/veh] | 41.64 | | | 27.29 | | | 62.76 | | | 87.00 | | |
| Approach LOS | D | | | C | | | E | | | F | | |
| d_I, Intersection Delay [s/veh] | 46.97 | | | | | | | | | | | |
| Intersection LOS | D | | | | | | | | | | | |
| Intersection V/C | 0.838 | | | | | | | | | | | |

## Sequence

| | | | | | | | | | | | | | | | | |
|---|---|---|---|---|---|---|---|---|---|---|---|---|---|---|---|---|
| Ring 1 | 1 | 2 | 3 | 4 | - | - | - | - | - | - | - | - | - | - | - | - |
| Ring 2 | 5 | 6 | 7 | 8 | - | - | - | - | - | - | - | - | - | - | - | - |
| Ring 3 | - | - | - | - | - | - | - | - | - | - | - | - | - | - | - | - |
| Ring 4 | - | - | - | - | - | - | - | - | - | - | - | - | - | - | - | - |

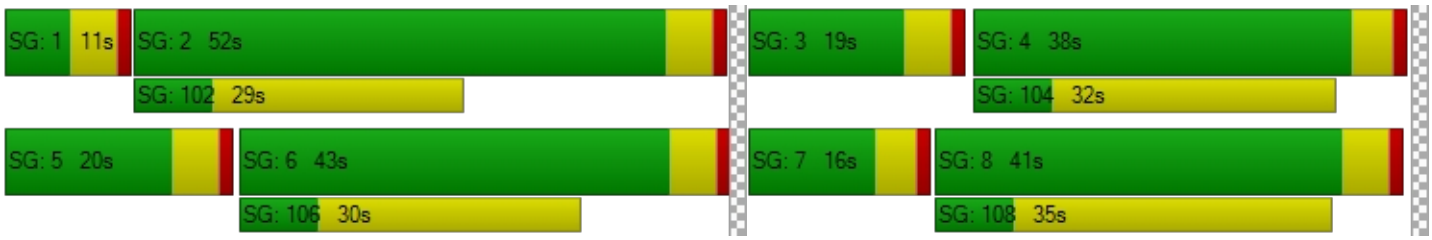

**Intersection Level Of Service Report**
**Intersection 2: Sierra Ave (NS) / Valley Blvd (EW)**

| | | | |
|---|---|---|---|
| Control Type: | Signalized | Delay (sec / veh): | 32.9 |
| Analysis Method: | HCM 2010 | Level Of Service: | C |
| Analysis Period: | 15 minutes | Volume to Capacity (v/c): | 0.912 |

**Intersection Setup**

| Name | Sierra Avenue | | | Sierra Avenue | | | Valley Boulevard | | | Valley Boulevard | | |
|---|---|---|---|---|---|---|---|---|---|---|---|---|
| Approach | Northbound | | | Southbound | | | Eastbound | | | Westbound | | |
| Lane Configuration | | | | | | | | | | | | |
| Turning Movement | Left | Thru | Right | Left | Thru | Right | Left | Thru | Right | Left | Thru | Right |
| Lane Width [ft] | 12.00 | 12.00 | 12.00 | 12.00 | 12.00 | 12.00 | 12.00 | 12.00 | 12.00 | 12.00 | 12.00 | 12.00 |
| No. of Lanes in Pocket | 2 | 0 | 0 | 2 | 0 | 0 | 2 | 0 | 0 | 2 | 0 | 0 |
| Pocket Length [ft] | 370.00 | 100.00 | 100.00 | 165.00 | 100.00 | 100.00 | 260.00 | 100.00 | 100.00 | 355.00 | 100.00 | 100.00 |
| Speed [mph] | 35.00 | | | 35.00 | | | 40.00 | | | 40.00 | | |
| Grade [%] | 0.00 | | | 0.00 | | | 0.00 | | | 0.00 | | |
| Crosswalk | Yes | | | Yes | | | Yes | | | Yes | | |

**volumes**

| Name | Sierra Avenue | | | Sierra Avenue | | | Valley Boulevard | | | Valley Boulevard | | |
|---|---|---|---|---|---|---|---|---|---|---|---|---|
| Base Volume Input [veh/h] | 408 | 1548 | 815 | 147 | 1418 | 205 | 242 | 475 | 369 | 332 | 442 | 190 |
| Base Volume Adjustment Factor | 1.0000 | 1.0000 | 1.0000 | 1.0000 | 1.0000 | 1.0000 | 1.0000 | 1.0000 | 1.0000 | 1.0000 | 1.0000 | 1.0000 |
| Heavy Vehicles Percentage [%] | 2.00 | 2.00 | 2.00 | 2.00 | 2.00 | 2.00 | 4.00 | 4.00 | 4.00 | 4.00 | 4.00 | 4.00 |
| Growth Rate | 1.00 | 1.00 | 1.00 | 1.00 | 1.00 | 1.00 | 1.00 | 1.00 | 1.00 | 1.00 | 1.00 | 1.00 |
| In-Process Volume [veh/h] | 0 | 0 | 0 | 0 | 0 | 0 | 0 | 0 | 0 | 0 | 0 | 0 |
| Site-Generated Trips [veh/h] | 0 | 0 | 0 | 0 | 0 | 0 | 0 | 0 | 0 | 0 | 0 | 0 |
| Diverted Trips [veh/h] | 0 | 0 | 0 | 0 | 0 | 0 | 0 | 0 | 0 | 0 | 0 | 0 |
| Pass-by Trips [veh/h] | 0 | 0 | 0 | 0 | 0 | 0 | 0 | 0 | 0 | 0 | 0 | 0 |
| Existing Site Adjustment Volume [veh/h] | 0 | 0 | 0 | 0 | 0 | 0 | 0 | 0 | 0 | 0 | 0 | 0 |
| Other Volume [veh/h] | 0 | 0 | 0 | 0 | 0 | 0 | 0 | 0 | 0 | 0 | 0 | 0 |
| Right-Turn on Red Volume [veh/h] | 0 | 0 | 0 | 0 | 0 | 0 | 0 | 0 | 0 | 0 | 0 | 0 |
| Total Hourly Volume [veh/h] | 408 | 1548 | 815 | 147 | 1418 | 205 | 242 | 475 | 369 | 332 | 442 | 190 |
| Peak Hour Factor | 0.9720 | 0.9720 | 0.9720 | 0.9720 | 0.9720 | 0.9720 | 0.9720 | 0.9720 | 0.9720 | 0.9720 | 0.9720 | 0.9720 |
| Other Adjustment Factor | 1.0000 | 1.0000 | 1.0000 | 1.0000 | 1.0000 | 1.0000 | 1.0000 | 1.0000 | 1.0000 | 1.0000 | 1.0000 | 1.0000 |
| Total 15-Minute Volume [veh/h] | 105 | 398 | 210 | 38 | 365 | 53 | 62 | 122 | 95 | 85 | 114 | 49 |
| Total Analysis Volume [veh/h] | 420 | 1593 | 838 | 151 | 1459 | 211 | 249 | 489 | 380 | 342 | 455 | 195 |
| Presence of On-Street Parking | No | | No | No | | No | No | | No | No | | No |
| On-Street Parking Maneuver Rate [/h] | 0 | 0 | 0 | 0 | 0 | 0 | 0 | 0 | 0 | 0 | 0 | 0 |
| Local Bus Stopping Rate [/h] | 0 | 0 | 0 | 0 | 0 | 0 | 0 | 0 | 0 | 0 | 0 | 0 |
| Pedestrian Volume [ped/h] | 0 | | | 0 | | | 0 | | | 0 | | |
| Bicycle Volume [bicycles/h] | 0 | | | 0 | | | 0 | | | 0 | | |

**Intersection Settings**

| | |
|---|---|
| Located in CBD | No |
| Signal Coordination Group | 1 - NS - Sierra |
| Cycle Length [s] | 120 |
| Coordination Type | Time of Day Pattern Coordinated |
| Actuation Type | Fully actuated |
| Offset [s] | 103.0 |
| Offset Reference | LagFO |
| Permissive Mode | SingleBand |
| Lost time [s] | 16.00 |

**Phasing & Timing**

| Control Type | Protecte | Permiss | Overlap | Protecte | Permiss | Permiss | Protecte | Permiss | Overlap | Protecte | Permiss | Overlap |
|---|---|---|---|---|---|---|---|---|---|---|---|---|
| Signal group | 5 | 2 | 2 | 1 | 6 | 0 | 3 | 8 | 8 | 7 | 4 | 4 |
| Auxiliary Signal Groups | | | 2,7 | | | | | | 5,8 | | | 1,4 |
| Lead / Lag | Lead | - | - | Lead | - | - | Lead | - | - | Lead | - | - |
| Minimum Green [s] | 5 | 5 | 5 | 5 | 5 | 0 | 5 | 5 | 5 | 5 | 5 | 5 |
| Maximum Green [s] | 30 | 30 | 30 | 30 | 30 | 0 | 30 | 30 | 30 | 30 | 30 | 30 |
| Amber [s] | 4.1 | 4.1 | 4.1 | 4.1 | 4.1 | 0.0 | 4.4 | 4.4 | 4.4 | 4.4 | 4.4 | 4.4 |
| All red [s] | 1.0 | 1.0 | 1.0 | 1.0 | 1.0 | 0.0 | 1.0 | 1.0 | 1.0 | 1.0 | 1.0 | 1.0 |
| Split [s] | 21 | 67 | 67 | 11 | 57 | 0 | 16 | 24 | 24 | 18 | 26 | 26 |
| Vehicle Extension [s] | 3.0 | 3.0 | 3.0 | 3.0 | 3.0 | 0.0 | 3.0 | 3.0 | 3.0 | 3.0 | 3.0 | 3.0 |
| Walk [s] | 0 | 7 | 7 | 0 | 7 | 0 | 0 | 5 | 5 | 0 | 5 | 5 |
| Pedestrian Clearance [s] | 0 | 24 | 24 | 0 | 26 | 0 | 0 | 10 | 10 | 0 | 10 | 10 |
| I1, Start-Up Lost Time [s] | 2.0 | 2.0 | 2.0 | 2.0 | 2.0 | 0.0 | 2.0 | 2.0 | 2.0 | 2.0 | 2.0 | 2.0 |
| I2, Clearance Lost Time [s] | 3.1 | 3.1 | 3.1 | 3.1 | 3.1 | 0.0 | 3.4 | 3.4 | 3.4 | 3.4 | 3.4 | 3.4 |
| Minimum Recall | No | No | No | No | No | | No | No | No | No | No | No |
| Maximum Recall | No | No | No | No | No | | No | No | No | No | No | No |
| Pedestrian Recall | No | No | No | No | No | | No | No | No | No | No | No |
| Detector Location [ft] | 0.0 | 0.0 | 0.0 | 0.0 | 0.0 | 0.0 | 0.0 | 0.0 | 0.0 | 0.0 | 0.0 | 0.0 |
| Detector Length [ft] | 0.0 | 0.0 | 0.0 | 0.0 | 0.0 | 0.0 | 0.0 | 0.0 | 0.0 | 0.0 | 0.0 | 0.0 |
| I, Upstream Filtering Factor | 1.00 | 1.00 | 1.00 | 1.00 | 1.00 | 1.00 | 1.00 | 1.00 | 1.00 | 1.00 | 1.00 | 1.00 |

**Exclusive Pedestrian Phase**

| | |
|---|---|
| Pedestrian Signal Group | 0 |
| Pedestrian Walk [s] | 0 |
| Pedestrian Clearance [s] | 0 |

**Lane Group Calculations**

| Lane Group | L | C | R | L | C | C | L | C | R | L | C | R |
|---|---|---|---|---|---|---|---|---|---|---|---|---|
| L, Total Lost Time per Cycle [s] | 5.10 | 5.10 | 5.40 | 5.10 | 5.10 | 5.10 | 5.40 | 5.40 | 5.10 | 5.40 | 5.40 | 5.10 |
| l1_p, Permitted Start-Up Lost Time [s] | 0.00 | 0.00 | 0.00 | 0.00 | 0.00 | 0.00 | 0.00 | 0.00 | 0.00 | 0.00 | 0.00 | 0.00 |
| l2, Clearance Lost Time [s] | 3.10 | 3.10 | 0.00 | 3.10 | 3.10 | 3.10 | 3.40 | 3.40 | 0.00 | 3.40 | 3.40 | 0.00 |
| g_i, Effective Green Time [s] | 16 | 62 | 80 | 6 | 52 | 52 | 11 | 18 | 40 | 13 | 20 | 32 |
| g / C, Green / Cycle | 0.13 | 0.52 | 0.66 | 0.05 | 0.43 | 0.43 | 0.09 | 0.15 | 0.33 | 0.11 | 0.17 | 0.26 |
| (v / s)_i Volume / Saturation Flow Rate | 0.12 | 0.45 | 0.53 | 0.04 | 0.32 | 0.32 | 0.07 | 0.14 | 0.24 | 0.10 | 0.13 | 0.13 |
| s, saturation flow rate [veh/h] | 3445 | 3547 | 1583 | 3445 | 3547 | 1745 | 3379 | 3478 | 1553 | 3379 | 3478 | 1553 |
| c, Capacity [veh/h] | 457 | 1834 | 1052 | 170 | 1539 | 757 | 299 | 534 | 514 | 355 | 592 | 411 |
| d1, Uniform Delay [s] | 48.77 | 15.48 | 3.68 | 55.73 | 20.12 | 20.16 | 52.06 | 46.98 | 29.23 | 51.37 | 44.19 | 32.37 |
| k, delay calibration | 0.11 | 0.50 | 0.50 | 0.11 | 0.50 | 0.50 | 0.11 | 0.11 | 0.50 | 0.11 | 0.11 | 0.50 |
| I, Upstream Filtering Factor | 1.00 | 1.00 | 1.00 | 1.00 | 1.00 | 1.00 | 1.00 | 1.00 | 1.00 | 1.00 | 1.00 | 1.00 |
| d2, Incremental Delay [s] | 7.97 | 5.90 | 6.26 | 14.16 | 3.03 | 6.10 | 6.01 | 6.75 | 9.20 | 14.97 | 2.14 | 3.90 |
| d3, Initial Queue Delay [s] | 0.00 | 0.00 | 0.00 | 0.00 | 0.00 | 0.00 | 0.00 | 0.00 | 0.00 | 0.00 | 0.00 | 0.00 |
| Rp, platoon ratio | 1.33 | 1.33 | 1.33 | 1.33 | 1.33 | 1.33 | 1.33 | 1.33 | 1.33 | 1.33 | 1.33 | 1.33 |
| PF, progression factor | 1.00 | 1.00 | 1.00 | 1.00 | 1.00 | 1.00 | 1.00 | 1.00 | 1.00 | 1.00 | 1.00 | 1.00 |

**Lane Group Results**

| | | | | | | | | | | | | |
|---|---|---|---|---|---|---|---|---|---|---|---|---|
| X, volume / capacity | 0.92 | 0.87 | 0.80 | 0.89 | 0.73 | 0.73 | 0.83 | 0.92 | 0.74 | 0.96 | 0.77 | 0.47 |
| d, Delay for Lane Group [s/veh] | 56.74 | 21.38 | 9.94 | 69.89 | 23.15 | 26.26 | 58.07 | 53.72 | 38.43 | 66.33 | 46.33 | 36.27 |
| Lane Group LOS | E | C | A | E | C | C | E | D | D | E | D | D |
| Critical Lane Group | No | Yes | No | Yes | No | No | No | No | Yes | Yes | No | No |
| 50th-Percentile Queue Length [veh] | 6.35 | 13.86 | 4.64 | 2.55 | 10.21 | 10.76 | 3.76 | 7.13 | 9.30 | 5.56 | 6.05 | 4.53 |
| 50th-Percentile Queue Length [ft] | 158.68 | 346.41 | 116.03 | 63.77 | 255.37 | 269.01 | 93.97 | 178.32 | 232.39 | 139.02 | 151.15 | 113.20 |
| 95th-Percentile Queue Length [veh] | 10.48 | 19.96 | 8.17 | 4.59 | 15.46 | 16.14 | 6.77 | 11.51 | 14.30 | 9.43 | 10.08 | 8.02 |
| 95th-Percentile Queue Length [ft] | 261.98 | 499.03 | 204.36 | 114.78 | 386.41 | 403.50 | 169.14 | 287.82 | 357.39 | 235.71 | 251.96 | 200.44 |

**Movement, Approach, & Intersection Results**

| | | | | | | | | | | | | |
|---|---|---|---|---|---|---|---|---|---|---|---|---|
| d_M, Delay for Movement [s/veh] | 56.74 | 21.38 | 9.94 | 69.89 | 23.88 | 26.26 | 58.07 | 53.72 | 38.43 | 66.33 | 46.33 | 36.27 |
| Movement LOS | E | C | A | E | C | C | E | D | D | E | D | D |
| d_A, Approach Delay [s/veh] | 23.23 | | | 27.97 | | | 49.49 | | | 51.25 | | |
| Approach LOS | C | | | C | | | D | | | D | | |
| d_I, Intersection Delay [s/veh] | 32.93 | | | | | | | | | | | |
| Intersection LOS | C | | | | | | | | | | | |
| Intersection V/C | 0.912 | | | | | | | | | | | |

## Sequence

| | | | | | | | | | | | | | | | | |
|---|---|---|---|---|---|---|---|---|---|---|---|---|---|---|---|---|
| Ring 1 | 1 | 2 | 3 | 4 | - | - | - | - | - | - | - | - | - | - | - | - |
| Ring 2 | 5 | 6 | 7 | 8 | - | - | - | - | - | - | - | - | - | - | - | - |
| Ring 3 | - | - | - | - | - | - | - | - | - | - | - | - | - | - | - | - |
| Ring 4 | - | - | - | - | - | - | - | - | - | - | - | - | - | - | - | - |

**Intersection Level Of Service Report**
**Intersection 3: Sierra Ave (NS) / I-10 Ramps (EW)**

| | | | |
|---|---|---|---|
| Control Type: | Signalized | Delay (sec / veh): | 31.7 |
| Analysis Method: | HCM 2010 | Level Of Service: | C |
| Analysis Period: | 15 minutes | Volume to Capacity (v/c): | 0.883 |

**Intersection Setup**

| Name | Sierra Avenue | | | Sierra Avenue | | | I-10 Ramps | | | | | |
|---|---|---|---|---|---|---|---|---|---|---|---|---|
| Approach | Northbound | | | Southbound | | | Eastbound | | | Westbound | | |
| Lane Configuration | | | | | | | | | | | | |
| Turning Movement | Left | Thru | Right | Left | Thru | Right | Left | Thru | Right | Left | Thru | Right |
| Lane Width [ft] | 12.00 | 12.00 | 12.00 | 12.00 | 12.00 | 12.00 | 12.00 | 12.00 | 12.00 | 12.00 | 12.00 | 12.00 |
| No. of Lanes in Pocket | 2 | 0 | 0 | 2 | 0 | 0 | 1 | 0 | 0 | 0 | 0 | 1 |
| Pocket Length [ft] | 540.00 | 100.00 | 100.00 | 295.00 | 100.00 | 100.00 | 430.00 | 100.00 | 100.00 | 100.00 | 100.00 | 520.00 |
| Speed [mph] | 40.00 | | | 35.00 | | | 30.00 | | | 30.00 | | |
| Grade [%] | 0.00 | | | 0.00 | | | 0.00 | | | 0.00 | | |
| Crosswalk | No | | | No | | | Yes | | | Yes | | |

**volumes**

| Name | Sierra Avenue | | | Sierra Avenue | | | I-10 Ramps | | | | | |
|---|---|---|---|---|---|---|---|---|---|---|---|---|
| Base Volume Input [veh/h] | 292 | 1125 | 592 | 722 | 907 | 694 | 812 | 0 | 381 | 464 | 0 | 797 |
| Base Volume Adjustment Factor | 1.0000 | 1.0000 | 1.0000 | 1.0000 | 1.0000 | 1.0000 | 1.0000 | 1.0000 | 1.0000 | 1.0000 | 1.0000 | 1.0000 |
| Heavy Vehicles Percentage [%] | 2.00 | 2.00 | 2.00 | 2.00 | 2.00 | 2.00 | 2.00 | 2.00 | 2.00 | 2.00 | 2.00 | 2.00 |
| Growth Rate | 1.00 | 1.00 | 1.00 | 1.00 | 1.00 | 1.00 | 1.00 | 1.00 | 1.00 | 1.00 | 1.00 | 1.00 |
| In-Process Volume [veh/h] | 0 | 0 | 0 | 0 | 0 | 0 | 0 | 0 | 0 | 0 | 0 | 0 |
| Site-Generated Trips [veh/h] | 0 | 0 | 0 | 0 | 0 | 0 | 0 | 0 | 0 | 0 | 0 | 0 |
| Diverted Trips [veh/h] | 0 | 0 | 0 | 0 | 0 | 0 | 0 | 0 | 0 | 0 | 0 | 0 |
| Pass-by Trips [veh/h] | 0 | 0 | 0 | 0 | 0 | 0 | 0 | 0 | 0 | 0 | 0 | 0 |
| Existing Site Adjustment Volume [veh/h] | 0 | 0 | 0 | 0 | 0 | 0 | 0 | 0 | 0 | 0 | 0 | 0 |
| Other Volume [veh/h] | 0 | 0 | 0 | 0 | 0 | 0 | 0 | 0 | 0 | 0 | 0 | 0 |
| Right-Turn on Red Volume [veh/h] | 0 | 0 | 0 | 0 | 0 | 0 | 0 | 0 | 0 | 0 | 0 | 0 |
| Total Hourly Volume [veh/h] | 292 | 1125 | 592 | 722 | 907 | 694 | 812 | 0 | 381 | 464 | 0 | 797 |
| Peak Hour Factor | 0.9830 | 0.9830 | 0.9830 | 0.9830 | 0.9830 | 0.9830 | 0.9830 | 1.0000 | 0.9830 | 0.9830 | 1.0000 | 0.9830 |
| Other Adjustment Factor | 1.0000 | 1.0000 | 1.0000 | 1.0000 | 1.0000 | 1.0000 | 1.0000 | 1.0000 | 1.0000 | 1.0000 | 1.0000 | 1.0000 |
| Total 15-Minute Volume [veh/h] | 74 | 286 | 151 | 184 | 231 | 177 | 207 | 0 | 97 | 118 | 0 | 203 |
| Total Analysis Volume [veh/h] | 297 | 1144 | 602 | 734 | 923 | 706 | 826 | 0 | 388 | 472 | 0 | 811 |
| Presence of On-Street Parking | No | | No | No | | No | No | | No | No | | No |
| On-Street Parking Maneuver Rate [/h] | 0 | 0 | 0 | 0 | 0 | 0 | 0 | 0 | 0 | 0 | 0 | 0 |
| Local Bus Stopping Rate [/h] | 0 | 0 | 0 | 0 | 0 | 0 | 0 | 0 | 0 | 0 | 0 | 0 |
| Pedestrian Volume [ped/h] | 0 | | | 0 | | | 0 | | | 0 | | |
| Bicycle Volume [bicycles/h] | 0 | | | 0 | | | 0 | | | 0 | | |

**Intersection Settings**

| | |
|---|---|
| Located in CBD | No |
| Signal Coordination Group | 1 - NS - Sierra |
| Cycle Length [s] | 120 |
| Coordination Type | Time of Day Pattern Coordinated |
| Actuation Type | Fully actuated |
| Offset [s] | 4.0 |
| Offset Reference | LagFO |
| Permissive Mode | SingleBand |
| Lost time [s] | 12.00 |

**Phasing & Timing**

| Control Type | Permiss | Permiss | Overlap | Permiss | Permiss | Overlap | Permiss | Permiss | Overlap | Permiss | Permiss | Overlap |
|---|---|---|---|---|---|---|---|---|---|---|---|---|
| Signal group | 2 | 2 | 2 | 6 | 6 | 6 | 3 | 0 | 3 | 7 | 0 | 7 |
| Auxiliary Signal Groups | | | 2,3,6,7 | | | 2,3,6,7 | | | 2,3,6 | | | 2,6,7 |
| Lead / Lag | Lag | - | - | Lag | - | - | Lead | - | - | Lead | - | - |
| Minimum Green [s] | 5 | 5 | 5 | 5 | 5 | 5 | 5 | 0 | 5 | 5 | 0 | 5 |
| Maximum Green [s] | 30 | 30 | 30 | 30 | 30 | 30 | 30 | 0 | 30 | 30 | 0 | 30 |
| Amber [s] | 4.4 | 4.4 | 4.4 | 4.1 | 4.1 | 4.1 | 3.7 | 0.0 | 3.7 | 3.7 | 0.0 | 3.7 |
| All red [s] | 3.0 | 3.0 | 3.0 | 3.0 | 3.0 | 3.0 | 3.0 | 0.0 | 3.0 | 3.0 | 0.0 | 3.0 |
| Split [s] | 34 | 34 | 34 | 43 | 43 | 43 | 43 | 0 | 43 | 43 | 0 | 43 |
| Vehicle Extension [s] | 3.0 | 3.0 | 3.0 | 3.0 | 3.0 | 3.0 | 3.0 | 0.0 | 3.0 | 3.0 | 0.0 | 3.0 |
| Walk [s] | 7 | 7 | 7 | 7 | 7 | 7 | 7 | 0 | 7 | 7 | 0 | 7 |
| Pedestrian Clearance [s] | 15 | 15 | 15 | 15 | 15 | 15 | 15 | 0 | 15 | 15 | 0 | 15 |
| I1, Start-Up Lost Time [s] | 2.0 | 2.0 | 2.0 | 2.0 | 2.0 | 2.0 | 2.0 | 0.0 | 2.0 | 2.0 | 0.0 | 2.0 |
| I2, Clearance Lost Time [s] | 5.4 | 5.4 | 5.4 | 5.1 | 5.1 | 5.1 | 4.7 | 0.0 | 4.7 | 4.7 | 0.0 | 4.7 |
| Minimum Recall | | No | No | | No | No | No | | No | No | | No |
| Maximum Recall | | No | No | | No | No | No | | No | No | | No |
| Pedestrian Recall | | No | No | | No | No | No | | No | No | | No |
| Detector Location [ft] | 0.0 | 0.0 | 0.0 | 0.0 | 0.0 | 0.0 | 0.0 | 0.0 | 0.0 | 0.0 | 0.0 | 0.0 |
| Detector Length [ft] | 0.0 | 0.0 | 0.0 | 0.0 | 0.0 | 0.0 | 0.0 | 0.0 | 0.0 | 0.0 | 0.0 | 0.0 |
| I, Upstream Filtering Factor | 1.00 | 1.00 | 1.00 | 1.00 | 1.00 | 1.00 | 1.00 | 1.00 | 1.00 | 1.00 | 1.00 | 1.00 |

**Exclusive Pedestrian Phase**

| | |
|---|---|
| Pedestrian Signal Group | 0 |
| Pedestrian Walk [s] | 0 |
| Pedestrian Clearance [s] | 0 |

**Lane Group Calculations**

| Lane Group | L | C | R | L | C | R | L | R | L | R |
|---|---|---|---|---|---|---|---|---|---|---|
| L, Total Lost Time per Cycle [s] | 7.40 | 7.40 | 7.10 | 7.10 | 7.10 | 7.10 | 6.70 | 7.10 | 6.70 | 7.10 |
| l1_p, Permitted Start-Up Lost Time [s] | 2.00 | 0.00 | 0.00 | 2.00 | 0.00 | 0.00 | 2.00 | 0.00 | 2.00 | 0.00 |
| l2, Clearance Lost Time [s] | 5.40 | 5.40 | 0.00 | 5.10 | 5.10 | 0.00 | 4.70 | 5.40 | 4.70 | 0.00 |
| g_i, Effective Green Time [s] | 31 | 31 | 142 | 31 | 31 | 142 | 36 | 144 | 36 | 105 |
| g / C, Green / Cycle | 0.26 | 0.26 | 1.18 | 0.26 | 0.26 | 1.18 | 0.30 | 1.20 | 0.30 | 0.88 |
| (v / s)_i Volume / Saturation Flow Rate | 0.11 | 0.23 | 0.38 | 0.27 | 0.18 | 0.45 | 0.30 | 0.25 | 0.17 | 0.51 |
| s, saturation flow rate [veh/h] | 2741 | 5074 | 1583 | 2741 | 5074 | 1583 | 2741 | 1583 | 2741 | 1583 |
| c, Capacity [veh/h] | 723 | 1316 | 1870 | 732 | 1329 | 1870 | 837 | 1900 | 837 | 1392 |
| d1, Uniform Delay [s] | 33.92 | 37.31 | 0.00 | 41.21 | 34.89 | 0.00 | 43.94 | 0.00 | 37.16 | 0.90 |
| k, delay calibration | 0.50 | 0.50 | 0.50 | 0.50 | 0.50 | 0.50 | 0.11 | 0.50 | 0.11 | 0.50 |
| I, Upstream Filtering Factor | 1.00 | 1.00 | 1.00 | 1.00 | 1.00 | 1.00 | 1.00 | 1.00 | 1.00 | 1.00 |
| d2, Incremental Delay [s] | 1.72 | 8.01 | 0.46 | 33.79 | 3.02 | 0.58 | 11.64 | 0.24 | 0.60 | 1.79 |
| d3, Initial Queue Delay [s] | 0.00 | 0.00 | 0.00 | 0.00 | 0.00 | 0.00 | 0.00 | 0.00 | 0.00 | 0.00 |
| Rp, platoon ratio | 1.33 | 1.33 | 1.01 | 1.33 | 1.33 | 1.01 | 1.00 | 1.00 | 1.00 | 1.00 |
| PF, progression factor | 1.00 | 1.00 | 1.00 | 1.00 | 1.00 | 1.00 | 1.00 | 1.00 | 1.00 | 1.00 |

**Lane Group Results**

| | | | | | | | | | | |
|---|---|---|---|---|---|---|---|---|---|---|
| X, volume / capacity | 0.41 | 0.87 | 0.32 | 1.00 | 0.69 | 0.38 | 0.99 | 0.20 | 0.56 | 0.58 |
| d, Delay for Lane Group [s/veh] | 35.64 | 45.31 | 0.46 | 75.00 | 37.91 | 0.58 | 55.58 | 0.24 | 37.76 | 2.69 |
| Lane Group LOS | D | D | A | F | D | A | E | A | D | A |
| Critical Lane Group | No | Yes | No | Yes | No | No | Yes | No | No | No |
| 50th-Percentile Queue Length [veh] | 3.35 | 10.43 | 0.24 | 13.83 | 7.50 | 0.30 | 13.75 | 0.13 | 6.05 | 0.69 |
| 50th-Percentile Queue Length [ft] | 83.83 | 260.86 | 5.93 | 345.82 | 187.39 | 7.57 | 343.79 | 3.21 | 151.23 | 17.29 |
| 95th-Percentile Queue Length [veh] | 6.04 | 15.73 | 0.43 | 19.96 | 11.99 | 0.54 | 19.83 | 0.23 | 10.08 | 1.24 |
| 95th-Percentile Queue Length [ft] | 150.89 | 393.30 | 10.67 | 498.96 | 299.64 | 13.62 | 495.83 | 5.77 | 252.07 | 31.12 |

**Movement, Approach, & Intersection Results**

| | | | | | | | | | | | | |
|---|---|---|---|---|---|---|---|---|---|---|---|---|
| d_M, Delay for Movement [s/veh] | 35.64 | 45.31 | 0.46 | 75.00 | 37.91 | 0.58 | 55.58 | 0.00 | 0.24 | 37.76 | 0.00 | 2.69 |
| Movement LOS | D | D | A | F | D | A | E | | A | D | | A |
| d_A, Approach Delay [s/veh] | 30.69 | | | 38.28 | | | 37.89 | | | 15.59 | | |
| Approach LOS | C | | | D | | | D | | | B | | |
| d_I, Intersection Delay [s/veh] | 31.75 | | | | | | | | | | | |
| Intersection LOS | C | | | | | | | | | | | |
| Intersection V/C | 0.883 | | | | | | | | | | | |

## Sequence

| | | | | | | | | | | | | | | | | |
|---|---|---|---|---|---|---|---|---|---|---|---|---|---|---|---|---|
| Ring 1 | 2 | 6 | 3 | - | - | - | - | - | - | - | - | - | - | - | - | - |
| Ring 2 | - | - | 7 | - | - | - | - | - | - | - | - | - | - | - | - | - |
| Ring 3 | - | - | - | - | - | - | - | - | - | - | - | - | - | - | - | - |
| Ring 4 | - | - | - | - | - | - | - | - | - | - | - | - | - | - | - | - |

**Intersection Level Of Service Report**
**Intersection 4: Sierra Ave (NS) / Slover Ave (EW)**

| | | | |
|---|---|---|---|
| Control Type: | Signalized | Delay (sec / veh): | 38.6 |
| Analysis Method: | HCM 2010 | Level Of Service: | D |
| Analysis Period: | 15 minutes | Volume to Capacity (v/c): | 0.772 |

**Intersection Setup**

| Name | Sierra Avenue | | | Sierra Avenue | | | Slover Avenue | | | Slover Avenue | | |
|---|---|---|---|---|---|---|---|---|---|---|---|---|
| Approach | Northbound | | | Southbound | | | Eastbound | | | Westbound | | |
| Lane Configuration | | | | | | | | | | | | |
| Turning Movement | Left | Thru | Right | Left | Thru | Right | Left | Thru | Right | Left | Thru | Right |
| Lane Width [ft] | 12.00 | 12.00 | 12.00 | 12.00 | 12.00 | 12.00 | 12.00 | 12.00 | 12.00 | 12.00 | 12.00 | 12.00 |
| No. of Lanes in Pocket | 2 | 0 | 0 | 2 | 0 | 0 | 2 | 0 | 1 | 2 | 0 | 1 |
| Pocket Length [ft] | 195.00 | 100.00 | 100.00 | 615.00 | 100.00 | 100.00 | 290.00 | 100.00 | 290.00 | 230.00 | 100.00 | 300.00 |
| Speed [mph] | 50.00 | | | 40.00 | | | 45.00 | | | 45.00 | | |
| Grade [%] | 0.00 | | | 0.00 | | | 0.00 | | | 0.00 | | |
| Crosswalk | Yes | | | Yes | | | Yes | | | Yes | | |

**volumes**

| Name | Sierra Avenue | | | Sierra Avenue | | | Slover Avenue | | | Slover Avenue | | |
|---|---|---|---|---|---|---|---|---|---|---|---|---|
| Base Volume Input [veh/h] | 258 | 1031 | 261 | 527 | 960 | 134 | 300 | 580 | 188 | 336 | 403 | 691 |
| Base Volume Adjustment Factor | 1.0000 | 1.0000 | 1.0000 | 1.0000 | 1.0000 | 1.0000 | 1.0000 | 1.0000 | 1.0000 | 1.0000 | 1.0000 | 1.0000 |
| Heavy Vehicles Percentage [%] | 2.00 | 2.00 | 2.00 | 2.00 | 2.00 | 2.00 | 2.00 | 2.00 | 2.00 | 2.00 | 2.00 | 2.00 |
| Growth Rate | 1.00 | 1.00 | 1.00 | 1.00 | 1.00 | 1.00 | 1.00 | 1.00 | 1.00 | 1.00 | 1.00 | 1.00 |
| In-Process Volume [veh/h] | 0 | 0 | 0 | 0 | 0 | 0 | 0 | 0 | 0 | 0 | 0 | 0 |
| Site-Generated Trips [veh/h] | 0 | 0 | 0 | 0 | 0 | 0 | 0 | 0 | 0 | 0 | 0 | 0 |
| Diverted Trips [veh/h] | 0 | 0 | 0 | 0 | 0 | 0 | 0 | 0 | 0 | 0 | 0 | 0 |
| Pass-by Trips [veh/h] | 0 | 0 | 0 | 0 | 0 | 0 | 0 | 0 | 0 | 0 | 0 | 0 |
| Existing Site Adjustment Volume [veh/h] | 0 | 0 | 0 | 0 | 0 | 0 | 0 | 0 | 0 | 0 | 0 | 0 |
| Other Volume [veh/h] | 0 | 0 | 0 | 0 | 0 | 0 | 0 | 0 | 0 | 0 | 0 | 0 |
| Right-Turn on Red Volume [veh/h] | 0 | 0 | 0 | 0 | 0 | 0 | 0 | 0 | 0 | 0 | 0 | 0 |
| Total Hourly Volume [veh/h] | 258 | 1031 | 261 | 527 | 960 | 134 | 300 | 580 | 188 | 336 | 403 | 691 |
| Peak Hour Factor | 0.9580 | 0.9580 | 0.9580 | 0.9580 | 0.9580 | 0.9580 | 0.9580 | 0.9580 | 0.9580 | 0.9580 | 0.9580 | 0.9580 |
| Other Adjustment Factor | 1.0000 | 1.0000 | 1.0000 | 1.0000 | 1.0000 | 1.0000 | 1.0000 | 1.0000 | 1.0000 | 1.0000 | 1.0000 | 1.0000 |
| Total 15-Minute Volume [veh/h] | 67 | 269 | 68 | 138 | 251 | 35 | 78 | 151 | 49 | 88 | 105 | 180 |
| Total Analysis Volume [veh/h] | 269 | 1076 | 272 | 550 | 1002 | 140 | 313 | 605 | 196 | 351 | 421 | 721 |
| Presence of On-Street Parking | No | | No | No | | No | No | | No | No | | No |
| On-Street Parking Maneuver Rate [/h] | 0 | 0 | 0 | 0 | 0 | 0 | 0 | 0 | 0 | 0 | 0 | 0 |
| Local Bus Stopping Rate [/h] | 0 | 0 | 0 | 0 | 0 | 0 | 0 | 0 | 0 | 0 | 0 | 0 |
| Pedestrian Volume [ped/h] | 0 | | | 0 | | | 0 | | | 0 | | |
| Bicycle Volume [bicycles/h] | 0 | | | 0 | | | 0 | | | 0 | | |

**Intersection Settings**

| | |
|---|---|
| Located in CBD | No |
| Signal Coordination Group | 1 - NS - Sierra |
| Cycle Length [s] | 120 |
| Coordination Type | Time of Day Pattern Coordinated |
| Actuation Type | Fully actuated |
| Offset [s] | 55.0 |
| Offset Reference | LagFO |
| Permissive Mode | SingleBand |
| Lost time [s] | 16.00 |

**Phasing & Timing**

| Control Type | Protecte | Permiss | Permiss | Protecte | Permiss | Permiss | Protecte | Permiss | Permiss | Protecte | Permiss | Overlap |
|---|---|---|---|---|---|---|---|---|---|---|---|---|
| Signal group | 5 | 2 | 0 | 1 | 6 | 0 | 3 | 8 | 0 | 7 | 4 | 4 |
| Auxiliary Signal Groups | | | | | | | | | | | | 1,4 |
| Lead / Lag | Lead | - | - | Lead | - | - | Lead | - | - | Lead | - | - |
| Minimum Green [s] | 5 | 5 | 0 | 5 | 5 | 0 | 5 | 5 | 0 | 5 | 5 | 5 |
| Maximum Green [s] | 30 | 30 | 0 | 30 | 30 | 0 | 30 | 30 | 0 | 30 | 30 | 30 |
| Amber [s] | 5.2 | 5.2 | 0.0 | 4.4 | 4.4 | 0.0 | 4.8 | 4.8 | 0.0 | 4.8 | 4.8 | 4.8 |
| All red [s] | 1.0 | 1.0 | 0.0 | 1.0 | 1.0 | 0.0 | 1.0 | 1.0 | 0.0 | 1.0 | 1.0 | 1.0 |
| Split [s] | 18 | 44 | 0 | 27 | 53 | 0 | 19 | 30 | 0 | 19 | 30 | 30 |
| Vehicle Extension [s] | 3.0 | 3.0 | 0.0 | 3.0 | 3.0 | 0.0 | 3.0 | 3.0 | 0.0 | 3.0 | 3.0 | 3.0 |
| Walk [s] | 0 | 7 | 0 | 0 | 7 | 0 | 0 | 5 | 0 | 0 | 5 | 5 |
| Pedestrian Clearance [s] | 0 | 22 | 0 | 0 | 20 | 0 | 0 | 10 | 0 | 0 | 10 | 10 |
| I1, Start-Up Lost Time [s] | 2.0 | 2.0 | 0.0 | 2.0 | 2.0 | 0.0 | 2.0 | 2.0 | 0.0 | 2.0 | 2.0 | 2.0 |
| I2, Clearance Lost Time [s] | 4.2 | 4.2 | 0.0 | 3.4 | 3.4 | 0.0 | 3.8 | 3.8 | 0.0 | 3.8 | 3.8 | 3.8 |
| Minimum Recall | No | No | | No | No | | No | No | | No | No | No |
| Maximum Recall | No | No | | No | No | | No | No | | No | No | No |
| Pedestrian Recall | No | No | | No | No | | No | No | | No | No | No |
| Detector Location [ft] | 0.0 | 0.0 | 0.0 | 0.0 | 0.0 | 0.0 | 0.0 | 0.0 | 0.0 | 0.0 | 0.0 | 0.0 |
| Detector Length [ft] | 0.0 | 0.0 | 0.0 | 0.0 | 0.0 | 0.0 | 0.0 | 0.0 | 0.0 | 0.0 | 0.0 | 0.0 |
| I, Upstream Filtering Factor | 1.00 | 1.00 | 1.00 | 1.00 | 1.00 | 1.00 | 1.00 | 1.00 | 1.00 | 1.00 | 1.00 | 1.00 |

**Exclusive Pedestrian Phase**

| | |
|---|---|
| Pedestrian Signal Group | 0 |
| Pedestrian Walk [s] | 0 |
| Pedestrian Clearance [s] | 0 |

**Lane Group Calculations**

| Lane Group | L | C | R | L | C | C | L | C | R | L | C | R |
|---|---|---|---|---|---|---|---|---|---|---|---|---|
| L, Total Lost Time per Cycle [s] | 6.20 | 6.20 | 6.20 | 5.40 | 5.40 | 5.40 | 5.80 | 5.80 | 5.80 | 5.80 | 5.80 | 5.40 |
| l1_p, Permitted Start-Up Lost Time [s] | 0.00 | 0.00 | 0.00 | 0.00 | 0.00 | 0.00 | 0.00 | 0.00 | 0.00 | 0.00 | 0.00 | 0.00 |
| l2, Clearance Lost Time [s] | 4.20 | 4.20 | 4.20 | 3.40 | 3.40 | 3.40 | 3.80 | 3.80 | 3.80 | 3.80 | 3.80 | 0.00 |
| g_i, Effective Green Time [s] | 11 | 39 | 39 | 22 | 50 | 50 | 13 | 23 | 23 | 13 | 23 | 50 |
| g / C, Green / Cycle | 0.09 | 0.33 | 0.33 | 0.18 | 0.41 | 0.41 | 0.11 | 0.19 | 0.19 | 0.11 | 0.19 | 0.42 |
| (v / s)_i Volume / Saturation Flow Rate | 0.08 | 0.21 | 0.17 | 0.16 | 0.22 | 0.22 | 0.09 | 0.17 | 0.12 | 0.10 | 0.12 | 0.26 |
| s, saturation flow rate [veh/h] | 3445 | 5074 | 1583 | 3445 | 3547 | 1748 | 3445 | 3547 | 1583 | 3445 | 3547 | 2803 |
| c, Capacity [veh/h] | 324 | 1669 | 521 | 621 | 1473 | 726 | 369 | 664 | 296 | 381 | 676 | 1175 |
| d1, Uniform Delay [s] | 51.60 | 28.21 | 26.83 | 44.44 | 19.29 | 19.30 | 52.67 | 47.83 | 45.27 | 52.90 | 44.63 | 27.28 |
| k, delay calibration | 0.11 | 0.50 | 0.50 | 0.11 | 0.50 | 0.50 | 0.11 | 0.11 | 0.13 | 0.11 | 0.11 | 0.20 |
| I, Upstream Filtering Factor | 1.00 | 1.00 | 1.00 | 1.00 | 1.00 | 1.00 | 1.00 | 1.00 | 1.00 | 1.00 | 1.00 | 1.00 |
| d2, Incremental Delay [s] | 5.52 | 1.93 | 3.71 | 4.49 | 1.31 | 2.65 | 5.50 | 5.31 | 3.12 | 9.53 | 0.94 | 0.97 |
| d3, Initial Queue Delay [s] | 0.00 | 0.00 | 0.00 | 0.00 | 0.00 | 0.00 | 0.00 | 0.00 | 0.00 | 0.00 | 0.00 | 0.00 |
| Rp, platoon ratio | 1.33 | 1.33 | 1.33 | 1.33 | 1.33 | 1.33 | 1.00 | 1.00 | 1.00 | 1.00 | 1.00 | 1.00 |
| PF, progression factor | 1.00 | 1.00 | 1.00 | 1.00 | 1.00 | 1.00 | 1.00 | 1.00 | 1.00 | 1.00 | 1.00 | 1.00 |

**Lane Group Results**

| | | | | | | | | | | | | |
|---|---|---|---|---|---|---|---|---|---|---|---|---|
| X, volume / capacity | 0.83 | 0.64 | 0.52 | 0.89 | 0.52 | 0.52 | 0.85 | 0.91 | 0.66 | 0.92 | 0.62 | 0.61 |
| d, Delay for Lane Group [s/veh] | 57.12 | 30.14 | 30.54 | 48.92 | 20.60 | 21.95 | 58.18 | 53.14 | 48.39 | 62.43 | 45.57 | 28.25 |
| Lane Group LOS | E | C | C | D | C | C | E | D | D | E | D | C |
| Critical Lane Group | No | Yes | No | Yes | No | No | Yes | No | No | No | No | Yes |
| 50th-Percentile Queue Length [veh] | 3.96 | 7.14 | 5.48 | 7.68 | 5.92 | 6.12 | 4.80 | 9.07 | 5.52 | 5.60 | 5.68 | 7.82 |
| 50th-Percentile Queue Length [ft] | 99.01 | 178.51 | 137.04 | 192.12 | 147.98 | 152.91 | 119.89 | 226.64 | 137.92 | 140.12 | 141.92 | 195.45 |
| 95th-Percentile Queue Length [veh] | 7.13 | 11.52 | 9.32 | 12.23 | 9.91 | 10.17 | 8.39 | 14.00 | 9.37 | 9.49 | 9.58 | 12.40 |
| 95th-Percentile Queue Length [ft] | 178.22 | 288.07 | 233.04 | 305.78 | 247.73 | 254.31 | 209.68 | 350.09 | 234.22 | 237.19 | 239.61 | 310.08 |

**Movement, Approach, & Intersection Results**

| | | | | | | | | | | | | |
|---|---|---|---|---|---|---|---|---|---|---|---|---|
| d_M, Delay for Movement [s/veh] | 57.12 | 30.14 | 30.54 | 48.92 | 20.92 | 21.95 | 58.18 | 53.14 | 48.39 | 62.43 | 45.57 | 28.25 |
| Movement LOS | E | C | C | D | C | C | E | D | D | E | D | C |
| d_A, Approach Delay [s/veh] | 34.70 | | | 30.11 | | | 53.72 | | | 41.17 | | |
| Approach LOS | C | | | C | | | D | | | D | | |
| d_I, Intersection Delay [s/veh] | 38.60 | | | | | | | | | | | |
| Intersection LOS | D | | | | | | | | | | | |
| Intersection V/C | 0.772 | | | | | | | | | | | |

## Sequence

| | | | | | | | | | | | | | | | | |
|---|---|---|---|---|---|---|---|---|---|---|---|---|---|---|---|---|
| Ring 1 | 1 | 2 | 3 | 4 | - | - | - | - | - | - | - | - | - | - | - | - |
| Ring 2 | 5 | 6 | 7 | 8 | - | - | - | - | - | - | - | - | - | - | - | - |
| Ring 3 | - | - | - | - | - | - | - | - | - | - | - | - | - | - | - | - |
| Ring 4 | - | - | - | - | - | - | - | - | - | - | - | - | - | - | - | - |

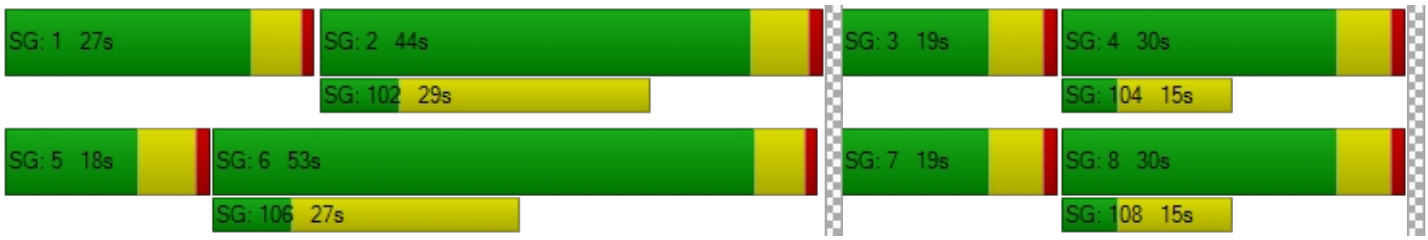

**Intersection Level Of Service Report**
**Intersection 5: Palmetto Ave (NS) / Valley Blvd (EW)**

| | | | |
|---|---|---|---|
| Control Type: | Signalized | Delay (sec / veh): | 21.9 |
| Analysis Method: | HCM 2010 | Level Of Service: | C |
| Analysis Period: | 15 minutes | Volume to Capacity (v/c): | 0.494 |

**Intersection Setup**

| Name | Palmetto Avenue | | Valley Boulevard | | Valley Boulevard | |
|---|---|---|---|---|---|---|
| Approach | Southbound | | Eastbound | | Westbound | |
| Lane Configuration | | | | | | |
| Turning Movement | Left | Right | Left | Thru | Thru | Right |
| Lane Width [ft] | 12.00 | 12.00 | 12.00 | 12.00 | 12.00 | 12.00 |
| No. of Lanes in Pocket | 0 | 0 | 1 | 0 | 0 | 0 |
| Pocket Length [ft] | 100.00 | 100.00 | 150.00 | 100.00 | 100.00 | 100.00 |
| Speed [mph] | 35.00 | | 40.00 | | 40.00 | |
| Grade [%] | 0.00 | | 0.00 | | 0.00 | |
| Crosswalk | Yes | | Yes | | No | |

**volumes**

| Name | Palmetto Avenue | | Valley Boulevard | | Valley Boulevard | |
|---|---|---|---|---|---|---|
| Base Volume Input [veh/h] | 99 | 165 | 346 | 867 | 167 | 82 |
| Base Volume Adjustment Factor | 1.0000 | 1.0000 | 1.0000 | 1.0000 | 1.0000 | 1.0000 |
| Heavy Vehicles Percentage [%] | 2.00 | 2.00 | 4.00 | 4.00 | 4.00 | 4.00 |
| Growth Rate | 1.00 | 1.00 | 1.00 | 1.00 | 1.00 | 1.00 |
| In-Process Volume [veh/h] | 0 | 0 | 0 | 0 | 0 | 0 |
| Site-Generated Trips [veh/h] | 0 | 0 | 0 | 0 | 0 | 0 |
| Diverted Trips [veh/h] | 0 | 0 | 0 | 0 | 0 | 0 |
| Pass-by Trips [veh/h] | 0 | 0 | 0 | 0 | 0 | 0 |
| Existing Site Adjustment Volume [veh/h] | 0 | 0 | 0 | 0 | 0 | 0 |
| Other Volume [veh/h] | 0 | 0 | 0 | 0 | 0 | 0 |
| Right-Turn on Red Volume [veh/h] | 0 | 0 | 0 | 0 | 0 | 0 |
| Total Hourly Volume [veh/h] | 99 | 165 | 346 | 867 | 167 | 82 |
| Peak Hour Factor | 0.9270 | 0.9270 | 0.9270 | 0.9270 | 0.9270 | 0.9270 |
| Other Adjustment Factor | 1.0000 | 1.0000 | 1.0000 | 1.0000 | 1.0000 | 1.0000 |
| Total 15-Minute Volume [veh/h] | 27 | 44 | 93 | 234 | 45 | 22 |
| Total Analysis Volume [veh/h] | 107 | 178 | 373 | 935 | 180 | 88 |
| Presence of On-Street Parking | No | No | No | No | No | No |
| On-Street Parking Maneuver Rate [/h] | 0 | 0 | 0 | 0 | 0 | 0 |
| Local Bus Stopping Rate [/h] | 0 | 0 | 0 | 0 | 0 | 0 |
| Pedestrian Volume [ped/h] | 0 | | 0 | | 0 | |
| Bicycle Volume [bicycles/h] | 0 | | 0 | | 0 | |

**Intersection Settings**

| | |
|---|---|
| Located in CBD | No |
| Signal Coordination Group | 3 - EW - Valley |
| Cycle Length [s] | 120 |
| Coordination Type | Time of Day Pattern Coordinated |
| Actuation Type | Fully actuated |
| Offset [s] | 0.0 |
| Offset Reference | LagFO |
| Permissive Mode | SingleBand |
| Lost time [s] | 12.00 |

**Phasing & Timing**

| Control Type | Split | Split | Protected | Permissive | Permissive | Permissive |
|---|---|---|---|---|---|---|
| Signal group | 1 | 0 | 3 | 8 | 4 | 0 |
| Auxiliary Signal Groups | | | | | | |
| Lead / Lag | Lead | - | Lead | - | - | - |
| Minimum Green [s] | 5 | 0 | 5 | 5 | 5 | 0 |
| Maximum Green [s] | 30 | 0 | 30 | 30 | 30 | 0 |
| Amber [s] | 4.1 | 0.0 | 4.4 | 4.4 | 4.4 | 0.0 |
| All red [s] | 1.0 | 0.0 | 1.0 | 1.0 | 1.0 | 0.0 |
| Split [s] | 39 | 0 | 51 | 81 | 30 | 0 |
| Vehicle Extension [s] | 3.0 | 0.0 | 3.0 | 3.0 | 3.0 | 0.0 |
| Walk [s] | 7 | 0 | 0 | 7 | 7 | 0 |
| Pedestrian Clearance [s] | 26 | 0 | 0 | 17 | 17 | 0 |
| I1, Start-Up Lost Time [s] | 2.0 | 0.0 | 2.0 | 2.0 | 2.0 | 0.0 |
| I2, Clearance Lost Time [s] | 3.1 | 0.0 | 3.4 | 3.4 | 3.4 | 0.0 |
| Minimum Recall | No | | No | No | No | |
| Maximum Recall | No | | No | No | No | |
| Pedestrian Recall | No | | No | No | No | |
| Detector Location [ft] | 0.0 | 0.0 | 0.0 | 0.0 | 0.0 | 0.0 |
| Detector Length [ft] | 0.0 | 0.0 | 0.0 | 0.0 | 0.0 | 0.0 |
| I, Upstream Filtering Factor | 1.00 | 1.00 | 1.00 | 1.00 | 1.00 | 1.00 |

**Exclusive Pedestrian Phase**

| | |
|---|---|
| Pedestrian Signal Group | 0 |
| Pedestrian Walk [s] | 0 |
| Pedestrian Clearance [s] | 0 |

**Lane Group Calculations**

| Lane Group | C | L | C | C | C |
|---|---|---|---|---|---|
| L, Total Lost Time per Cycle [s] | 5.10 | 5.40 | 5.40 | 5.40 | 5.40 |
| l1_p, Permitted Start-Up Lost Time [s] | 0.00 | 0.00 | 0.00 | 0.00 | 0.00 |
| l2, Clearance Lost Time [s] | 3.10 | 3.40 | 3.40 | 3.40 | 3.40 |
| g_i, Effective Green Time [s] | 23 | 28 | 87 | 53 | 53 |
| g / C, Green / Cycle | 0.19 | 0.23 | 0.72 | 0.45 | 0.45 |
| (v / s)_i Volume / Saturation Flow Rate | 0.17 | 0.21 | 0.27 | 0.05 | 0.06 |
| s, saturation flow rate [veh/h] | 1650 | 1740 | 3478 | 3478 | 1556 |
| c, Capacity [veh/h] | 314 | 403 | 2512 | 1551 | 694 |
| d1, Uniform Delay [s] | 47.54 | 40.49 | 0.65 | 14.02 | 14.09 |
| k, delay calibration | 0.16 | 0.11 | 0.50 | 0.50 | 0.50 |
| I, Upstream Filtering Factor | 1.00 | 1.00 | 1.00 | 1.00 | 1.00 |
| d2, Incremental Delay [s] | 13.31 | 9.48 | 0.42 | 0.15 | 0.38 |
| d3, Initial Queue Delay [s] | 0.00 | 0.00 | 0.00 | 0.00 | 0.00 |
| Rp, platoon ratio | 1.00 | 1.33 | 1.33 | 1.33 | 1.33 |
| PF, progression factor | 1.00 | 1.00 | 1.00 | 1.00 | 1.00 |

**Lane Group Results**

| | | | | | |
|---|---|---|---|---|---|
| X, volume / capacity | 0.91 | 0.93 | 0.37 | 0.12 | 0.13 |
| d, Delay for Lane Group [s/veh] | 60.85 | 49.96 | 1.07 | 14.17 | 14.47 |
| Lane Group LOS | E | D | A | B | B |
| Critical Lane Group | Yes | Yes | No | No | Yes |
| 50th-Percentile Queue Length [veh] | 9.38 | 10.77 | 0.53 | 1.06 | 1.11 |
| 50th-Percentile Queue Length [ft] | 234.62 | 269.23 | 13.28 | 26.52 | 27.67 |
| 95th-Percentile Queue Length [veh] | 14.41 | 16.15 | 0.96 | 1.91 | 1.99 |
| 95th-Percentile Queue Length [ft] | 360.22 | 403.78 | 23.91 | 47.74 | 49.81 |

**Movement, Approach, & Intersection Results**

| | | | | | | |
|---|---|---|---|---|---|---|
| d_M, Delay for Movement [s/veh] | 60.85 | 60.85 | 49.96 | 1.07 | 14.17 | 14.47 |
| Movement LOS | E | E | D | A | B | B |
| d_A, Approach Delay [s/veh] | 60.85 | | 15.02 | | 14.27 | |
| Approach LOS | E | | B | | B | |
| d_I, Intersection Delay [s/veh] | 21.93 | | | | | |
| Intersection LOS | C | | | | | |
| Intersection V/C | 0.494 | | | | | |

## Sequence

| | | | | | | | | | | | | | | | | |
|---|---|---|---|---|---|---|---|---|---|---|---|---|---|---|---|---|
| Ring 1 | 1 | 3 | 4 | - | - | - | - | - | - | - | - | - | - | - | - | - |
| Ring 2 | - | - | 8 | - | - | - | - | - | - | - | - | - | - | - | - | - |
| Ring 3 | - | - | - | - | - | - | - | - | - | - | - | - | - | - | - | - |
| Ring 4 | - | - | - | - | - | - | - | - | - | - | - | - | - | - | - | - |

**Intersection Level Of Service Report**
**Intersection 6: Alder Ave (NS) / San Bernardino Ave (EW)**

| | | | |
|---|---|---|---|
| Control Type: | Signalized | Delay (sec / veh): | 21.5 |
| Analysis Method: | HCM 2010 | Level Of Service: | C |
| Analysis Period: | 15 minutes | Volume to Capacity (v/c): | 0.651 |

**Intersection Setup**

| Name | Alder Avenue | | | Alder Avenue | | | San Bernardino Avenue | | | San Bernardino Avenue | | |
|---|---|---|---|---|---|---|---|---|---|---|---|---|
| Approach | Northbound | | | Southbound | | | Eastbound | | | Westbound | | |
| Lane Configuration | | | | | | | | | | | | |
| Turning Movement | Left | Thru | Right | Left | Thru | Right | Left | Thru | Right | Left | Thru | Right |
| Lane Width [ft] | 12.00 | 12.00 | 12.00 | 12.00 | 12.00 | 12.00 | 12.00 | 12.00 | 12.00 | 12.00 | 12.00 | 12.00 |
| No. of Lanes in Pocket | 1 | 0 | 0 | 1 | 0 | 0 | 1 | 0 | 0 | 1 | 0 | 0 |
| Pocket Length [ft] | 100.00 | 100.00 | 100.00 | 100.00 | 100.00 | 100.00 | 100.00 | 100.00 | 100.00 | 80.00 | 100.00 | 100.00 |
| Speed [mph] | 40.00 | | | 40.00 | | | 35.00 | | | 35.00 | | |
| Grade [%] | 0.00 | | | 0.00 | | | 0.00 | | | 0.00 | | |
| Crosswalk | Yes | | | Yes | | | Yes | | | Yes | | |

**volumes**

| Name | Alder Avenue | | | Alder Avenue | | | San Bernardino Avenue | | | San Bernardino Avenue | | |
|---|---|---|---|---|---|---|---|---|---|---|---|---|
| Base Volume Input [veh/h] | 83 | 575 | 181 | 38 | 324 | 38 | 48 | 281 | 70 | 104 | 273 | 23 |
| Base Volume Adjustment Factor | 1.0000 | 1.0000 | 1.0000 | 1.0000 | 1.0000 | 1.0000 | 1.0000 | 1.0000 | 1.0000 | 1.0000 | 1.0000 | 1.0000 |
| Heavy Vehicles Percentage [%] | 2.00 | 2.00 | 2.00 | 2.00 | 2.00 | 2.00 | 2.00 | 2.00 | 2.00 | 2.00 | 2.00 | 2.00 |
| Growth Rate | 1.00 | 1.00 | 1.00 | 1.00 | 1.00 | 1.00 | 1.00 | 1.00 | 1.00 | 1.00 | 1.00 | 1.00 |
| In-Process Volume [veh/h] | 0 | 0 | 0 | 0 | 0 | 0 | 0 | 0 | 0 | 0 | 0 | 0 |
| Site-Generated Trips [veh/h] | 0 | 0 | 0 | 0 | 0 | 0 | 0 | 0 | 0 | 0 | 0 | 0 |
| Diverted Trips [veh/h] | 0 | 0 | 0 | 0 | 0 | 0 | 0 | 0 | 0 | 0 | 0 | 0 |
| Pass-by Trips [veh/h] | 0 | 0 | 0 | 0 | 0 | 0 | 0 | 0 | 0 | 0 | 0 | 0 |
| Existing Site Adjustment Volume [veh/h] | 0 | 0 | 0 | 0 | 0 | 0 | 0 | 0 | 0 | 0 | 0 | 0 |
| Other Volume [veh/h] | 0 | 0 | 0 | 0 | 0 | 0 | 0 | 0 | 0 | 0 | 0 | 0 |
| Right-Turn on Red Volume [veh/h] | 0 | 0 | 0 | 0 | 0 | 0 | 0 | 0 | 0 | 0 | 0 | 0 |
| Total Hourly Volume [veh/h] | 83 | 575 | 181 | 38 | 324 | 38 | 48 | 281 | 70 | 104 | 273 | 23 |
| Peak Hour Factor | 0.8530 | 0.8530 | 0.8530 | 0.8530 | 0.8530 | 0.8530 | 0.8530 | 0.8530 | 0.8530 | 0.8530 | 0.8530 | 0.8530 |
| Other Adjustment Factor | 1.0000 | 1.0000 | 1.0000 | 1.0000 | 1.0000 | 1.0000 | 1.0000 | 1.0000 | 1.0000 | 1.0000 | 1.0000 | 1.0000 |
| Total 15-Minute Volume [veh/h] | 24 | 169 | 53 | 11 | 95 | 11 | 14 | 82 | 21 | 30 | 80 | 7 |
| Total Analysis Volume [veh/h] | 97 | 674 | 212 | 45 | 380 | 45 | 56 | 329 | 82 | 122 | 320 | 27 |
| Presence of On-Street Parking | No | | No | No | | No | No | | No | No | | No |
| On-Street Parking Maneuver Rate [/h] | 0 | 0 | 0 | 0 | 0 | 0 | 0 | 0 | 0 | 0 | 0 | 0 |
| Local Bus Stopping Rate [/h] | 0 | 0 | 0 | 0 | 0 | 0 | 0 | 0 | 0 | 0 | 0 | 0 |
| Pedestrian Volume [ped/h] | 0 | | | 0 | | | 0 | | | 0 | | |
| Bicycle Volume [bicycles/h] | 0 | | | 0 | | | 0 | | | 0 | | |

**Intersection Settings**

| | |
|---|---|
| Located in CBD | No |
| Signal Coordination Group | - |
| Cycle Length [s] | 100 |
| Coordination Type | Time of Day Pattern Isolated |
| Actuation Type | Fully actuated |
| Offset [s] | 0.0 |
| Offset Reference | LagFO |
| Permissive Mode | SingleBand |
| Lost time [s] | 16.00 |

**Phasing & Timing**

| Control Type | Protecte | Permiss | Permiss | Protecte | Permiss | Permiss | Protecte | Permiss | Permiss | Protecte | Permiss | Permiss |
|---|---|---|---|---|---|---|---|---|---|---|---|---|
| Signal group | 5 | 2 | 0 | 1 | 6 | 0 | 3 | 8 | 0 | 7 | 4 | 0 |
| Auxiliary Signal Groups | | | | | | | | | | | | |
| Lead / Lag | Lead | - | - | Lead | - | - | Lead | - | - | Lead | - | - |
| Minimum Green [s] | 5 | 5 | 0 | 5 | 5 | 0 | 5 | 5 | 0 | 5 | 5 | 0 |
| Maximum Green [s] | 30 | 30 | 0 | 30 | 30 | 0 | 30 | 30 | 0 | 30 | 30 | 0 |
| Amber [s] | 4.4 | 4.4 | 0.0 | 4.4 | 4.4 | 0.0 | 4.1 | 4.1 | 0.0 | 4.1 | 4.1 | 0.0 |
| All red [s] | 1.0 | 1.0 | 0.0 | 1.0 | 1.0 | 0.0 | 1.0 | 1.0 | 0.0 | 1.0 | 1.0 | 0.0 |
| Split [s] | 12 | 38 | 0 | 11 | 37 | 0 | 11 | 37 | 0 | 14 | 40 | 0 |
| Vehicle Extension [s] | 3.0 | 3.0 | 0.0 | 3.0 | 3.0 | 0.0 | 3.0 | 3.0 | 0.0 | 3.0 | 3.0 | 0.0 |
| Walk [s] | 0 | 7 | 0 | 0 | 7 | 0 | 0 | 7 | 0 | 0 | 7 | 0 |
| Pedestrian Clearance [s] | 0 | 24 | 0 | 0 | 24 | 0 | 0 | 24 | 0 | 0 | 24 | 0 |
| I1, Start-Up Lost Time [s] | 2.0 | 2.0 | 0.0 | 2.0 | 2.0 | 0.0 | 2.0 | 2.0 | 0.0 | 2.0 | 2.0 | 0.0 |
| I2, Clearance Lost Time [s] | 3.4 | 3.4 | 0.0 | 3.4 | 3.4 | 0.0 | 3.1 | 3.1 | 0.0 | 3.1 | 3.1 | 0.0 |
| Minimum Recall | No | No | | No | No | | No | No | | No | No | |
| Maximum Recall | No | No | | No | No | | No | No | | No | No | |
| Pedestrian Recall | No | No | | No | No | | No | No | | No | No | |
| Detector Location [ft] | 0.0 | 0.0 | 0.0 | 0.0 | 0.0 | 0.0 | 0.0 | 0.0 | 0.0 | 0.0 | 0.0 | 0.0 |
| Detector Length [ft] | 0.0 | 0.0 | 0.0 | 0.0 | 0.0 | 0.0 | 0.0 | 0.0 | 0.0 | 0.0 | 0.0 | 0.0 |
| I, Upstream Filtering Factor | 1.00 | 1.00 | 1.00 | 1.00 | 1.00 | 1.00 | 1.00 | 1.00 | 1.00 | 1.00 | 1.00 | 1.00 |

**Exclusive Pedestrian Phase**

| | |
|---|---|
| Pedestrian Signal Group | 0 |
| Pedestrian Walk [s] | 0 |
| Pedestrian Clearance [s] | 0 |

**Lane Group Calculations**

| Lane Group | L | C | C | L | C | C | L | C | C | L | C | C |
|---|---|---|---|---|---|---|---|---|---|---|---|---|
| L, Total Lost Time per Cycle [s] | 5.40 | 5.40 | 5.40 | 5.40 | 5.40 | 5.40 | 5.10 | 5.10 | 5.10 | 5.10 | 5.10 | 5.10 |
| l1_p, Permitted Start-Up Lost Time [s] | 0.00 | 0.00 | 0.00 | 0.00 | 0.00 | 0.00 | 0.00 | 0.00 | 0.00 | 0.00 | 0.00 | 0.00 |
| l2, Clearance Lost Time [s] | 3.40 | 3.40 | 3.40 | 3.40 | 3.40 | 3.40 | 3.10 | 3.10 | 3.10 | 3.10 | 3.10 | 3.10 |
| g_i, Effective Green Time [s] | 4 | 16 | 16 | 2 | 15 | 15 | 3 | 9 | 9 | 5 | 11 | 11 |
| g / C, Green / Cycle | 0.07 | 0.31 | 0.31 | 0.05 | 0.28 | 0.28 | 0.05 | 0.16 | 0.16 | 0.09 | 0.20 | 0.20 |
| (v / s)_i Volume / Saturation Flow Rate | 0.05 | 0.25 | 0.25 | 0.03 | 0.12 | 0.12 | 0.03 | 0.11 | 0.12 | 0.07 | 0.09 | 0.09 |
| s, saturation flow rate [veh/h] | 1774 | 1863 | 1712 | 1774 | 1863 | 1795 | 1774 | 1863 | 1737 | 1774 | 1863 | 1812 |
| c, Capacity [veh/h] | 130 | 573 | 526 | 82 | 522 | 503 | 95 | 306 | 285 | 164 | 379 | 369 |
| d1, Uniform Delay [s] | 24.49 | 17.19 | 17.19 | 25.17 | 15.80 | 15.82 | 24.95 | 21.23 | 21.28 | 23.83 | 18.87 | 18.89 |
| k, delay calibration | 0.11 | 0.11 | 0.11 | 0.11 | 0.11 | 0.11 | 0.11 | 0.11 | 0.11 | 0.11 | 0.11 | 0.11 |
| I, Upstream Filtering Factor | 1.00 | 1.00 | 1.00 | 1.00 | 1.00 | 1.00 | 1.00 | 1.00 | 1.00 | 1.00 | 1.00 | 1.00 |
| d2, Incremental Delay [s] | 8.15 | 2.74 | 2.97 | 5.65 | 0.52 | 0.55 | 5.78 | 2.76 | 3.13 | 6.45 | 0.88 | 0.91 |
| d3, Initial Queue Delay [s] | 0.00 | 0.00 | 0.00 | 0.00 | 0.00 | 0.00 | 0.00 | 0.00 | 0.00 | 0.00 | 0.00 | 0.00 |
| Rp, platoon ratio | 1.00 | 1.00 | 1.00 | 1.00 | 1.00 | 1.00 | 1.00 | 1.00 | 1.00 | 1.00 | 1.00 | 1.00 |
| PF, progression factor | 1.00 | 1.00 | 1.00 | 1.00 | 1.00 | 1.00 | 1.00 | 1.00 | 1.00 | 1.00 | 1.00 | 1.00 |

**Lane Group Results**

| | | | | | | | | | | | | |
|---|---|---|---|---|---|---|---|---|---|---|---|---|
| X, volume / capacity | 0.75 | 0.81 | 0.81 | 0.55 | 0.41 | 0.42 | 0.59 | 0.69 | 0.70 | 0.74 | 0.46 | 0.47 |
| d, Delay for Lane Group [s/veh] | 32.64 | 19.93 | 20.17 | 30.81 | 16.32 | 16.37 | 30.72 | 23.99 | 24.41 | 30.28 | 19.75 | 19.80 |
| Lane Group LOS | C | B | C | C | B | B | C | C | C | C | B | B |
| Critical Lane Group | No | No | Yes | Yes | No | No | No | No | Yes | Yes | No | No |
| 50th-Percentile Queue Length [veh] | 1.37 | 4.73 | 4.39 | 0.63 | 1.88 | 1.83 | 0.79 | 2.46 | 2.37 | 1.66 | 1.79 | 1.76 |
| 50th-Percentile Queue Length [ft] | 34.28 | 118.37 | 109.64 | 15.78 | 46.99 | 45.86 | 19.72 | 61.49 | 59.17 | 41.53 | 44.77 | 43.99 |
| 95th-Percentile Queue Length [veh] | 2.47 | 8.30 | 7.82 | 1.14 | 3.38 | 3.30 | 1.42 | 4.43 | 4.26 | 2.99 | 3.22 | 3.17 |
| 95th-Percentile Queue Length [ft] | 61.71 | 207.59 | 195.50 | 28.41 | 84.59 | 82.55 | 35.49 | 110.68 | 106.50 | 74.76 | 80.59 | 79.18 |

**Movement, Approach, & Intersection Results**

| | | | | | | | | | | | | |
|---|---|---|---|---|---|---|---|---|---|---|---|---|
| d_M, Delay for Movement [s/veh] | 32.64 | 20.01 | 20.17 | 30.81 | 16.34 | 16.37 | 30.72 | 24.14 | 24.41 | 30.28 | 19.77 | 19.80 |
| Movement LOS | C | C | C | C | B | B | C | C | C | C | B | B |
| d_A, Approach Delay [s/veh] | 21.29 | | | 17.73 | | | 24.98 | | | 22.51 | | |
| Approach LOS | C | | | B | | | C | | | C | | |
| d_I, Intersection Delay [s/veh] | 21.55 | | | | | | | | | | | |
| Intersection LOS | C | | | | | | | | | | | |
| Intersection V/C | 0.651 | | | | | | | | | | | |

## Sequence

| | | | | | | | | | | | | | | | | |
|---|---|---|---|---|---|---|---|---|---|---|---|---|---|---|---|---|
| Ring 1 | 1 | 2 | 3 | 4 | - | - | - | - | - | - | - | - | - | - | - | - |
| Ring 2 | 5 | 6 | 7 | 8 | - | - | - | - | - | - | - | - | - | - | - | - |
| Ring 3 | - | - | - | - | - | - | - | - | - | - | - | - | - | - | - | - |
| Ring 4 | - | - | - | - | - | - | - | - | - | - | - | - | - | - | - | - |

**Intersection Level Of Service Report**
**Intersection 7: Alder Ave (NS) / Marygold Ave (EW)**

| | | | |
|---|---|---|---|
| Control Type: | All-way stop | Delay (sec / veh): | 128.2 |
| Analysis Method: | HCM 2010 | Level Of Service: | F |
| Analysis Period: | 15 minutes | | |

**Intersection Setup**

| Name | Alder Avenue | | | Alder Avenue | | | Marygold Avenue | | | Marygold Avenue | | |
|---|---|---|---|---|---|---|---|---|---|---|---|---|
| Approach | Northbound | | | Southbound | | | Eastbound | | | Westbound | | |
| Lane Configuration | | | | | | | | | | | | |
| Turning Movement | Left | Thru | Right | Left | Thru | Right | Left | Thru | Right | Left | Thru | Right |
| Lane Width [ft] | 12.00 | 12.00 | 12.00 | 12.00 | 12.00 | 12.00 | 12.00 | 12.00 | 12.00 | 12.00 | 12.00 | 12.00 |
| No. of Lanes in Pocket | 0 | 0 | 1 | 0 | 0 | 0 | 0 | 0 | 0 | 0 | 0 | 0 |
| Pocket Length [ft] | 100.00 | 100.00 | 200.00 | 100.00 | 100.00 | 100.00 | 100.00 | 100.00 | 100.00 | 100.00 | 100.00 | 100.00 |
| Speed [mph] | 40.00 | | | 40.00 | | | 35.00 | | | 25.00 | | |
| Grade [%] | 0.00 | | | 0.00 | | | 0.00 | | | 0.00 | | |
| Crosswalk | Yes | | | Yes | | | Yes | | | Yes | | |

**volumes**

| Name | Alder Avenue | | | Alder Avenue | | | Marygold Avenue | | | Marygold Avenue | | |
|---|---|---|---|---|---|---|---|---|---|---|---|---|
| Base Volume Input [veh/h] | 50 | 673 | 20 | 23 | 440 | 106 | 190 | 44 | 31 | 5 | 9 | 6 |
| Base Volume Adjustment Factor | 1.0000 | 1.0000 | 1.0000 | 1.0000 | 1.0000 | 1.0000 | 1.0000 | 1.0000 | 1.0000 | 1.0000 | 1.0000 | 1.0000 |
| Heavy Vehicles Percentage [%] | 2.00 | 2.00 | 2.00 | 2.00 | 2.00 | 2.00 | 2.00 | 2.00 | 2.00 | 2.00 | 2.00 | 2.00 |
| Growth Rate | 1.00 | 1.00 | 1.00 | 1.00 | 1.00 | 1.00 | 1.00 | 1.00 | 1.00 | 1.00 | 1.00 | 1.00 |
| In-Process Volume [veh/h] | 0 | 0 | 0 | 0 | 0 | 0 | 0 | 0 | 0 | 0 | 0 | 0 |
| Site-Generated Trips [veh/h] | 0 | 0 | 0 | 0 | 0 | 0 | 0 | 0 | 0 | 0 | 0 | 0 |
| Diverted Trips [veh/h] | 0 | 0 | 0 | 0 | 0 | 0 | 0 | 0 | 0 | 0 | 0 | 0 |
| Pass-by Trips [veh/h] | 0 | 0 | 0 | 0 | 0 | 0 | 0 | 0 | 0 | 0 | 0 | 0 |
| Existing Site Adjustment Volume [veh/h] | 0 | 0 | 0 | 0 | 0 | 0 | 0 | 0 | 0 | 0 | 0 | 0 |
| Other Volume [veh/h] | 0 | 0 | 0 | 0 | 0 | 0 | 0 | 0 | 0 | 0 | 0 | 0 |
| Total Hourly Volume [veh/h] | 50 | 673 | 20 | 23 | 440 | 106 | 190 | 44 | 31 | 5 | 9 | 6 |
| Peak Hour Factor | 0.9220 | 0.9220 | 0.9220 | 0.9220 | 0.9220 | 0.9220 | 0.9220 | 0.9220 | 0.9220 | 0.9220 | 0.9220 | 0.9220 |
| Other Adjustment Factor | 1.0000 | 1.0000 | 1.0000 | 1.0000 | 1.0000 | 1.0000 | 1.0000 | 1.0000 | 1.0000 | 1.0000 | 1.0000 | 1.0000 |
| Total 15-Minute Volume [veh/h] | 14 | 182 | 5 | 6 | 119 | 29 | 52 | 12 | 8 | 1 | 2 | 2 |
| Total Analysis Volume [veh/h] | 54 | 730 | 22 | 25 | 477 | 115 | 206 | 48 | 34 | 5 | 10 | 7 |
| Pedestrian Volume [ped/h] | 0 | | | 0 | | | 0 | | | 0 | | |

**Intersection Settings**

**Lanes**

**Movement, Approach, & Intersection Results**

| | | | | | | |
|---|---|---|---|---|---|---|
| 95th-Percentile Queue Length [veh] | 39.18 | 0.11 | 11.49 | 0.69 | 3.47 | 0.16 |
| 95th-Percentile Queue Length [ft] | 979.43 | 2.87 | 287.19 | 17.32 | 86.84 | 3.90 |
| Approach Delay [s/veh] | 237.23 | | 41.09 | | 18.89 | 11.54 |
| Approach LOS | F | | E | | C | B |
| Intersection Delay [s/veh] | 128.25 | | | | | |
| Intersection LOS | F | | | | | |

**Intersection Level Of Service Report**
**Intersection 8: Alder Ave (NS) / Valley Blvd (EW)**

| | | | |
|---|---|---|---|
| Control Type: | Signalized | Delay (sec / veh): | 369.2 |
| Analysis Method: | HCM 2010 | Level Of Service: | F |
| Analysis Period: | 15 minutes | Volume to Capacity (v/c): | 3.925 |

**Intersection Setup**

| Name | Alder Avenue | | | Alder Avenue | | | Valley Boulevard | | | | | |
|---|---|---|---|---|---|---|---|---|---|---|---|---|
| Approach | Northbound | | | Southbound | | | Eastbound | | | Westbound | | |
| Lane Configuration | | | | | | | | | | | | |
| Turning Movement | Left | Thru | Right | Left | Thru | Right | Left | Thru | Right | Left | Thru | Right |
| Lane Width [ft] | 12.00 | 12.00 | 12.00 | 12.00 | 12.00 | 12.00 | 12.00 | 12.00 | 12.00 | 12.00 | 12.00 | 12.00 |
| No. of Lanes in Pocket | 0 | 0 | 1 | 0 | 0 | 0 | 1 | 0 | 0 | 1 | 0 | 0 |
| Pocket Length [ft] | 100.00 | 100.00 | 55.00 | 100.00 | 100.00 | 100.00 | 100.00 | 100.00 | 100.00 | 100.00 | 100.00 | 100.00 |
| Speed [mph] | 40.00 | | | 40.00 | | | 40.00 | | | 30.00 | | |
| Grade [%] | 0.00 | | | 0.00 | | | 0.00 | | | 0.00 | | |
| Crosswalk | Yes | | | Yes | | | Yes | | | Yes | | |

**volumes**

| Name | Alder Avenue | | | Alder Avenue | | | Valley Boulevard | | | | | |
|---|---|---|---|---|---|---|---|---|---|---|---|---|
| Base Volume Input [veh/h] | 378 | 414 | 269 | 116 | 290 | 22 | 146 | 341 | 379 | 147 | 188 | 153 |
| Base Volume Adjustment Factor | 1.0000 | 1.0000 | 1.0000 | 1.0000 | 1.0000 | 1.0000 | 1.0000 | 1.0000 | 1.0000 | 1.0000 | 1.0000 | 1.0000 |
| Heavy Vehicles Percentage [%] | 2.00 | 2.00 | 2.00 | 2.00 | 2.00 | 2.00 | 4.00 | 4.00 | 4.00 | 4.00 | 4.00 | 4.00 |
| Growth Rate | 1.00 | 1.00 | 1.00 | 1.00 | 1.00 | 1.00 | 1.00 | 1.00 | 1.00 | 1.00 | 1.00 | 1.00 |
| In-Process Volume [veh/h] | 0 | 0 | 0 | 0 | 0 | 0 | 0 | 0 | 0 | 0 | 0 | 0 |
| Site-Generated Trips [veh/h] | 0 | 0 | 0 | 0 | 0 | 0 | 0 | 0 | 0 | 0 | 0 | 0 |
| Diverted Trips [veh/h] | 0 | 0 | 0 | 0 | 0 | 0 | 0 | 0 | 0 | 0 | 0 | 0 |
| Pass-by Trips [veh/h] | 0 | 0 | 0 | 0 | 0 | 0 | 0 | 0 | 0 | 0 | 0 | 0 |
| Existing Site Adjustment Volume [veh/h] | 0 | 0 | 0 | 0 | 0 | 0 | 0 | 0 | 0 | 0 | 0 | 0 |
| Other Volume [veh/h] | 0 | 0 | 0 | 0 | 0 | 0 | 0 | 0 | 0 | 0 | 0 | 0 |
| Right-Turn on Red Volume [veh/h] | 0 | 0 | 0 | 0 | 0 | 0 | 0 | 0 | 0 | 0 | 0 | 0 |
| Total Hourly Volume [veh/h] | 378 | 414 | 269 | 116 | 290 | 22 | 146 | 341 | 379 | 147 | 188 | 153 |
| Peak Hour Factor | 0.8890 | 0.8890 | 0.8890 | 0.8890 | 0.8890 | 0.8890 | 0.8890 | 0.8890 | 0.8890 | 0.8890 | 0.8890 | 0.8890 |
| Other Adjustment Factor | 1.0000 | 1.0000 | 1.0000 | 1.0000 | 1.0000 | 1.0000 | 1.0000 | 1.0000 | 1.0000 | 1.0000 | 1.0000 | 1.0000 |
| Total 15-Minute Volume [veh/h] | 106 | 116 | 76 | 33 | 82 | 6 | 41 | 96 | 107 | 41 | 53 | 43 |
| Total Analysis Volume [veh/h] | 425 | 466 | 303 | 130 | 326 | 25 | 164 | 384 | 426 | 165 | 211 | 172 |
| Presence of On-Street Parking | No | | No | No | | No | No | | No | No | | No |
| On-Street Parking Maneuver Rate [/h] | 0 | 0 | 0 | 0 | 0 | 0 | 0 | 0 | 0 | 0 | 0 | 0 |
| Local Bus Stopping Rate [/h] | 0 | 0 | 0 | 0 | 0 | 0 | 0 | 0 | 0 | 0 | 0 | 0 |
| Pedestrian Volume [ped/h] | 0 | | | 0 | | | 0 | | | 0 | | |
| Bicycle Volume [bicycles/h] | 0 | | | 0 | | | 0 | | | 0 | | |

**Intersection Settings**

| | |
|---|---|
| Located in CBD | No |
| Signal Coordination Group | 3 - EW - Valley |
| Cycle Length [s] | 120 |
| Coordination Type | Time of Day Pattern Coordinated |
| Actuation Type | Fully actuated |
| Offset [s] | 50.0 |
| Offset Reference | LagFO |
| Permissive Mode | SingleBand |
| Lost time [s] | 12.00 |

**Phasing & Timing**

| Control Type | Permiss | Permiss | Permiss | Permiss | Permiss | Permiss | Protecte | Permiss | Permiss | Protecte | Permiss | Permiss |
|---|---|---|---|---|---|---|---|---|---|---|---|---|
| Signal group | 0 | 2 | 0 | 0 | 6 | 0 | 3 | 8 | 0 | 7 | 4 | 0 |
| Auxiliary Signal Groups | | | | | | | | | | | | |
| Lead / Lag | - | - | - | - | - | - | Lead | - | - | Lead | - | - |
| Minimum Green [s] | 0 | 5 | 0 | 0 | 5 | 0 | 5 | 5 | 0 | 5 | 5 | 0 |
| Maximum Green [s] | 0 | 30 | 0 | 0 | 30 | 0 | 30 | 30 | 0 | 30 | 30 | 0 |
| Amber [s] | 0.0 | 4.4 | 0.0 | 0.0 | 4.4 | 0.0 | 4.4 | 4.4 | 0.0 | 3.7 | 3.7 | 0.0 |
| All red [s] | 0.0 | 1.0 | 0.0 | 0.0 | 1.0 | 0.0 | 1.0 | 1.0 | 0.0 | 1.0 | 1.0 | 0.0 |
| Split [s] | 0 | 71 | 0 | 0 | 71 | 0 | 16 | 35 | 0 | 14 | 33 | 0 |
| Vehicle Extension [s] | 0.0 | 3.0 | 0.0 | 0.0 | 3.0 | 0.0 | 3.0 | 3.0 | 0.0 | 3.0 | 3.0 | 0.0 |
| Walk [s] | 0 | 7 | 0 | 0 | 7 | 0 | 0 | 7 | 0 | 0 | 7 | 0 |
| Pedestrian Clearance [s] | 0 | 25 | 0 | 0 | 29 | 0 | 0 | 22 | 0 | 0 | 21 | 0 |
| I1, Start-Up Lost Time [s] | 0.0 | 2.0 | 0.0 | 0.0 | 2.0 | 0.0 | 2.0 | 2.0 | 0.0 | 2.0 | 2.0 | 0.0 |
| I2, Clearance Lost Time [s] | 0.0 | 3.4 | 0.0 | 0.0 | 3.4 | 0.0 | 3.4 | 3.4 | 0.0 | 2.7 | 2.7 | 0.0 |
| Minimum Recall | | No | | | No | | No | No | | No | No | |
| Maximum Recall | | No | | | No | | No | No | | No | No | |
| Pedestrian Recall | | No | | | No | | No | No | | No | No | |
| Detector Location [ft] | 0.0 | 0.0 | 0.0 | 0.0 | 0.0 | 0.0 | 0.0 | 0.0 | 0.0 | 0.0 | 0.0 | 0.0 |
| Detector Length [ft] | 0.0 | 0.0 | 0.0 | 0.0 | 0.0 | 0.0 | 0.0 | 0.0 | 0.0 | 0.0 | 0.0 | 0.0 |
| I, Upstream Filtering Factor | 1.00 | 1.00 | 1.00 | 1.00 | 1.00 | 1.00 | 1.00 | 1.00 | 1.00 | 1.00 | 1.00 | 1.00 |

**Exclusive Pedestrian Phase**

| | |
|---|---|
| Pedestrian Signal Group | 0 |
| Pedestrian Walk [s] | 0 |
| Pedestrian Clearance [s] | 0 |

**Lane Group Calculations**

| Lane Group | C | R | C | L | C | C | L | C | C |
|---|---|---|---|---|---|---|---|---|---|
| L, Total Lost Time per Cycle [s] | 5.40 | 5.40 | 5.40 | 5.40 | 5.40 | 5.40 | 4.70 | 4.70 | 4.70 |
| l1_p, Permitted Start-Up Lost Time [s] | 2.00 | 0.00 | 2.00 | 0.00 | 0.00 | 0.00 | 0.00 | 0.00 | 0.00 |
| l2, Clearance Lost Time [s] | 3.40 | 3.40 | 3.40 | 3.40 | 3.40 | 3.40 | 2.70 | 2.70 | 2.70 |
| g_i, Effective Green Time [s] | 66 | 66 | 66 | 11 | 30 | 30 | 9 | 28 | 28 |
| g / C, Green / Cycle | 0.55 | 0.55 | 0.55 | 0.09 | 0.25 | 0.25 | 0.08 | 0.24 | 0.24 |
| (v / s)_i Volume / Saturation Flow Rate | 1.09 | 0.19 | 3.16 | 0.09 | 0.21 | 0.27 | 0.09 | 0.11 | 0.11 |
| s, saturation flow rate [veh/h] | 814 | 1583 | 152 | 1740 | 1827 | 1553 | 1740 | 1827 | 1562 |
| c, Capacity [veh/h] | 489 | 865 | 121 | 156 | 448 | 381 | 137 | 429 | 367 |
| d1, Uniform Delay [s] | 30.18 | 15.26 | 39.32 | 52.82 | 38.40 | 40.37 | 53.68 | 35.27 | 35.40 |
| k, delay calibration | 0.50 | 0.11 | 0.50 | 0.35 | 0.50 | 0.50 | 0.46 | 0.50 | 0.50 |
| I, Upstream Filtering Factor | 1.00 | 1.00 | 1.00 | 1.00 | 1.00 | 1.00 | 1.00 | 1.00 | 1.00 |
| d2, Incremental Delay [s] | 377.46 | 0.24 | 1355.41 | 73.84 | 18.64 | 82.14 | 137.15 | 3.75 | 4.61 |
| d3, Initial Queue Delay [s] | 0.00 | 0.00 | 0.00 | 0.00 | 0.00 | 0.00 | 0.00 | 0.00 | 0.00 |
| Rp, platoon ratio | 1.00 | 1.00 | 1.00 | 1.33 | 1.33 | 1.33 | 1.33 | 1.33 | 1.33 |
| PF, progression factor | 1.00 | 1.00 | 1.00 | 1.00 | 1.00 | 1.00 | 1.00 | 1.00 | 1.00 |

**Lane Group Results**

| | | | | | | | | | |
|---|---|---|---|---|---|---|---|---|---|
| X, volume / capacity | 1.82 | 0.35 | 3.97 | 1.05 | 0.86 | 1.12 | 1.20 | 0.48 | 0.49 |
| d, Delay for Lane Group [s/veh] | 407.64 | 15.50 | 1394.74 | 126.66 | 57.04 | 122.51 | 190.83 | 39.02 | 40.00 |
| Lane Group LOS | F | B | F | F | E | F | F | D | D |
| Critical Lane Group | No | No | Yes | No | No | Yes | Yes | No | No |
| 50th-Percentile Queue Length [veh] | 65.74 | 4.47 | 47.97 | 7.67 | 11.90 | 18.86 | 9.27 | 5.04 | 4.52 |
| 50th-Percentile Queue Length [ft] | 1643.48 | 111.77 | 1199.25 | 191.85 | 297.47 | 471.43 | 231.65 | 126.05 | 113.09 |
| 95th-Percentile Queue Length [veh] | 108.38 | 7.94 | 85.81 | 12.44 | 17.56 | 27.67 | 15.15 | 8.72 | 8.01 |
| 95th-Percentile Queue Length [ft] | 2709.52 | 198.46 | 2145.28 | 311.00 | 438.90 | 691.68 | 378.73 | 218.11 | 200.30 |

**Movement, Approach, & Intersection Results**

| | | | | | | | | | | | | |
|---|---|---|---|---|---|---|---|---|---|---|---|---|
| d_M, Delay for Movement [s/veh] | 407.64 | 407.64 | 15.50 | 1394.74 | 1394.74 | 1394.74 | 126.66 | 57.04 | 122.51 | 190.83 | 39.05 | 40.00 |
| Movement LOS | F | F | B | F | F | F | F | E | F | F | D | D |
| d_A, Approach Delay [s/veh] | 308.13 | | | 1394.74 | | | 97.40 | | | 85.05 | | |
| Approach LOS | F | | | F | | | F | | | F | | |
| d_I, Intersection Delay [s/veh] | 369.17 | | | | | | | | | | | |
| Intersection LOS | F | | | | | | | | | | | |
| Intersection V/C | 3.925 | | | | | | | | | | | |

## Sequence

| | | | | | | | | | | | | | | | | |
|---|---|---|---|---|---|---|---|---|---|---|---|---|---|---|---|---|
| Ring 1 | 2 | 3 | 4 | - | - | - | - | - | - | - | - | - | - | - | - | - |
| Ring 2 | 6 | 7 | 8 | - | - | - | - | - | - | - | - | - | - | - | - | - |
| Ring 3 | - | - | - | - | - | - | - | - | - | - | - | - | - | - | - | - |
| Ring 4 | - | - | - | - | - | - | - | - | - | - | - | - | - | - | - | - |

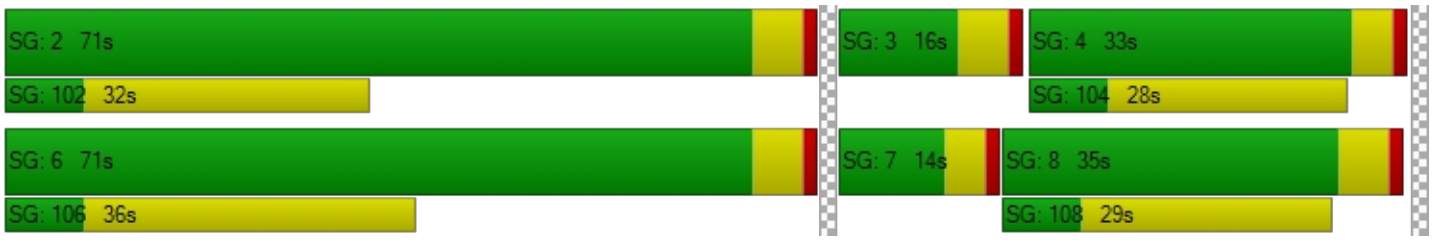

**Intersection Level Of Service Report**
**Intersection 9: Locust Ave (NS) / Marygold Ave (EW)**

| | | | |
|---|---|---|---|
| Control Type: | All-way stop | Delay (sec / veh): | 22.0 |
| Analysis Method: | HCM 2010 | Level Of Service: | C |
| Analysis Period: | 15 minutes | | |

**Intersection Setup**

| Name | Locust Avenue | | | Locust Avenue | | | Marygold Avenue | | | | | |
|---|---|---|---|---|---|---|---|---|---|---|---|---|
| Approach | Northbound | | | Southbound | | | Eastbound | | | Westbound | | |
| Lane Configuration | | | | | | | | | | | | |
| Turning Movement | Left | Thru | Right | Left | Thru | Right | Left | Thru | Right | Left | Thru | Right |
| Lane Width [ft] | 12.00 | 12.00 | 12.00 | 12.00 | 12.00 | 12.00 | 12.00 | 12.00 | 12.00 | 12.00 | 12.00 | 12.00 |
| No. of Lanes in Pocket | 0 | 0 | 1 | 0 | 0 | 1 | 0 | 0 | 0 | 0 | 0 | 0 |
| Pocket Length [ft] | 100.00 | 100.00 | 100.00 | 100.00 | 100.00 | 325.00 | 100.00 | 100.00 | 100.00 | 100.00 | 100.00 | 100.00 |
| Speed [mph] | 30.00 | | | 40.00 | | | 30.00 | | | 30.00 | | |
| Grade [%] | 0.00 | | | 0.00 | | | 0.00 | | | 0.00 | | |
| Crosswalk | Yes | | | Yes | | | Yes | | | Yes | | |

**volumes**

| Name | Locust Avenue | | | Locust Avenue | | | Marygold Avenue | | | | | |
|---|---|---|---|---|---|---|---|---|---|---|---|---|
| Base Volume Input [veh/h] | 24 | 483 | 29 | 19 | 188 | 13 | 61 | 87 | 17 | 15 | 29 | 31 |
| Base Volume Adjustment Factor | 1.0000 | 1.0000 | 1.0000 | 1.0000 | 1.0000 | 1.0000 | 1.0000 | 1.0000 | 1.0000 | 1.0000 | 1.0000 | 1.0000 |
| Heavy Vehicles Percentage [%] | 2.00 | 2.00 | 2.00 | 2.00 | 2.00 | 2.00 | 2.00 | 2.00 | 2.00 | 2.00 | 2.00 | 2.00 |
| Growth Rate | 1.00 | 1.00 | 1.00 | 1.00 | 1.00 | 1.00 | 1.00 | 1.00 | 1.00 | 1.00 | 1.00 | 1.00 |
| In-Process Volume [veh/h] | 0 | 0 | 0 | 0 | 0 | 0 | 0 | 0 | 0 | 0 | 0 | 0 |
| Site-Generated Trips [veh/h] | 0 | 0 | 0 | 0 | 0 | 0 | 0 | 0 | 0 | 0 | 0 | 0 |
| Diverted Trips [veh/h] | 0 | 0 | 0 | 0 | 0 | 0 | 0 | 0 | 0 | 0 | 0 | 0 |
| Pass-by Trips [veh/h] | 0 | 0 | 0 | 0 | 0 | 0 | 0 | 0 | 0 | 0 | 0 | 0 |
| Existing Site Adjustment Volume [veh/h] | 0 | 0 | 0 | 0 | 0 | 0 | 0 | 0 | 0 | 0 | 0 | 0 |
| Other Volume [veh/h] | 0 | 0 | 0 | 0 | 0 | 0 | 0 | 0 | 0 | 0 | 0 | 0 |
| Total Hourly Volume [veh/h] | 24 | 483 | 29 | 19 | 188 | 13 | 61 | 87 | 17 | 15 | 29 | 31 |
| Peak Hour Factor | 0.9500 | 0.9500 | 0.9500 | 0.9500 | 0.9500 | 0.9500 | 0.9500 | 0.9500 | 0.9500 | 0.9500 | 0.9500 | 0.9500 |
| Other Adjustment Factor | 1.0000 | 1.0000 | 1.0000 | 1.0000 | 1.0000 | 1.0000 | 1.0000 | 1.0000 | 1.0000 | 1.0000 | 1.0000 | 1.0000 |
| Total 15-Minute Volume [veh/h] | 6 | 127 | 8 | 5 | 49 | 3 | 16 | 23 | 4 | 4 | 8 | 8 |
| Total Analysis Volume [veh/h] | 25 | 508 | 31 | 20 | 198 | 14 | 64 | 92 | 18 | 16 | 31 | 33 |
| Pedestrian Volume [ped/h] | 0 | | | 0 | | | 0 | | | 0 | | |

**Intersection Settings**

**Lanes**

**Movement, Approach, & Intersection Results**

| | | | | | | |
|---|---|---|---|---|---|---|
| 95th-Percentile Queue Length [veh] | 9.36 | 0.13 | 1.72 | 0.06 | 1.27 | 0.49 |
| 95th-Percentile Queue Length [ft] | 234.04 | 3.36 | 43.01 | 1.61 | 31.80 | 12.16 |
| Approach Delay [s/veh] | 30.75 | | 12.22 | | 11.97 | 10.35 |
| Approach LOS | D | | B | | B | B |
| Intersection Delay [s/veh] | 21.99 | | | | | |
| Intersection LOS | C | | | | | |

**Intersection Level Of Service Report**
**Intersection 10: Locust Ave (NS) / Valley Blvd (EW)**

| | | | |
|---|---|---|---|
| Control Type: | Signalized | Delay (sec / veh): | 23.3 |
| Analysis Method: | HCM 2010 | Level Of Service: | C |
| Analysis Period: | 15 minutes | Volume to Capacity (v/c): | 0.472 |

**Intersection Setup**

| Name | Locust Avenue | | | Locust Avenue | | | Valley Boulevard | | | Valley Boulevard | | |
|---|---|---|---|---|---|---|---|---|---|---|---|---|
| Approach | Northbound | | | Southbound | | | Eastbound | | | Westbound | | |
| Lane Configuration | | | | | | | | | | | | |
| Turning Movement | Left | Thru | Right | Left | Thru | Right | Left | Thru | Right | Left | Thru | Right |
| Lane Width [ft] | 12.00 | 12.00 | 12.00 | 12.00 | 12.00 | 12.00 | 12.00 | 12.00 | 12.00 | 12.00 | 12.00 | 12.00 |
| No. of Lanes in Pocket | 0 | 0 | 0 | 0 | 0 | 0 | 1 | 0 | 0 | 1 | 0 | 0 |
| Pocket Length [ft] | 100.00 | 100.00 | 100.00 | 100.00 | 100.00 | 100.00 | 100.00 | 100.00 | 100.00 | 200.00 | 100.00 | 100.00 |
| Speed [mph] | 30.00 | | | 40.00 | | | 45.00 | | | 45.00 | | |
| Grade [%] | 0.00 | | | 0.00 | | | 0.00 | | | 0.00 | | |
| Crosswalk | Yes | | | Yes | | | No | | | Yes | | |

**volumes**

| Name | Locust Avenue | | | Locust Avenue | | | Valley Boulevard | | | Valley Boulevard | | |
|---|---|---|---|---|---|---|---|---|---|---|---|---|
| Base Volume Input [veh/h] | 14 | 13 | 28 | 55 | 10 | 68 | 315 | 507 | 22 | 47 | 253 | 141 |
| Base Volume Adjustment Factor | 1.0000 | 1.0000 | 1.0000 | 1.0000 | 1.0000 | 1.0000 | 1.0000 | 1.0000 | 1.0000 | 1.0000 | 1.0000 | 1.0000 |
| Heavy Vehicles Percentage [%] | 2.00 | 2.00 | 2.00 | 2.00 | 2.00 | 2.00 | 4.00 | 4.00 | 4.00 | 4.00 | 4.00 | 4.00 |
| Growth Rate | 1.00 | 1.00 | 1.00 | 1.00 | 1.00 | 1.00 | 1.00 | 1.00 | 1.00 | 1.00 | 1.00 | 1.00 |
| In-Process Volume [veh/h] | 0 | 0 | 0 | 0 | 0 | 0 | 0 | 0 | 0 | 0 | 0 | 0 |
| Site-Generated Trips [veh/h] | 0 | 0 | 0 | 0 | 0 | 0 | 0 | 0 | 0 | 0 | 0 | 0 |
| Diverted Trips [veh/h] | 0 | 0 | 0 | 0 | 0 | 0 | 0 | 0 | 0 | 0 | 0 | 0 |
| Pass-by Trips [veh/h] | 0 | 0 | 0 | 0 | 0 | 0 | 0 | 0 | 0 | 0 | 0 | 0 |
| Existing Site Adjustment Volume [veh/h] | 0 | 0 | 0 | 0 | 0 | 0 | 0 | 0 | 0 | 0 | 0 | 0 |
| Other Volume [veh/h] | 0 | 0 | 0 | 0 | 0 | 0 | 0 | 0 | 0 | 0 | 0 | 0 |
| Right-Turn on Red Volume [veh/h] | 0 | 0 | 0 | 0 | 0 | 0 | 0 | 0 | 0 | 0 | 0 | 0 |
| Total Hourly Volume [veh/h] | 14 | 13 | 28 | 55 | 10 | 68 | 315 | 507 | 22 | 47 | 253 | 141 |
| Peak Hour Factor | 0.9100 | 0.9100 | 0.9100 | 0.9100 | 0.9100 | 0.9100 | 0.9100 | 0.9100 | 0.9100 | 0.9100 | 0.9100 | 0.9100 |
| Other Adjustment Factor | 1.0000 | 1.0000 | 1.0000 | 1.0000 | 1.0000 | 1.0000 | 1.0000 | 1.0000 | 1.0000 | 1.0000 | 1.0000 | 1.0000 |
| Total 15-Minute Volume [veh/h] | 4 | 4 | 8 | 15 | 3 | 19 | 87 | 139 | 6 | 13 | 70 | 39 |
| Total Analysis Volume [veh/h] | 15 | 14 | 31 | 60 | 11 | 75 | 346 | 557 | 24 | 52 | 278 | 155 |
| Presence of On-Street Parking | No | | No | No | | No | No | | No | No | | No |
| On-Street Parking Maneuver Rate [/h] | 0 | 0 | 0 | 0 | 0 | 0 | 0 | 0 | 0 | 0 | 0 | 0 |
| Local Bus Stopping Rate [/h] | 0 | 0 | 0 | 0 | 0 | 0 | 0 | 0 | 0 | 0 | 0 | 0 |
| Pedestrian Volume [ped/h] | 0 | | | 0 | | | 0 | | | 0 | | |
| Bicycle Volume [bicycles/h] | 0 | | | 0 | | | 0 | | | 0 | | |

**Intersection Settings**

| | |
|---|---|
| Located in CBD | No |
| Signal Coordination Group | 3 - EW - Valley |
| Cycle Length [s] | 120 |
| Coordination Type | Time of Day Pattern Coordinated |
| Actuation Type | Fully actuated |
| Offset [s] | 119.0 |
| Offset Reference | LagFO |
| Permissive Mode | SingleBand |
| Lost time [s] | 12.00 |

**Phasing & Timing**

| Control Type | Permiss | Permiss | Permiss | Permiss | Permiss | Permiss | Protecte | Permiss | Permiss | Protecte | Permiss | Permiss |
|---|---|---|---|---|---|---|---|---|---|---|---|---|
| Signal group | 0 | 2 | 0 | 0 | 6 | 0 | 3 | 8 | 0 | 7 | 4 | 0 |
| Auxiliary Signal Groups | | | | | | | | | | | | |
| Lead / Lag | - | - | - | - | - | - | Lead | - | - | Lead | - | - |
| Minimum Green [s] | 0 | 5 | 0 | 0 | 5 | 0 | 5 | 5 | 0 | 5 | 5 | 0 |
| Maximum Green [s] | 0 | 30 | 0 | 0 | 30 | 0 | 30 | 30 | 0 | 30 | 30 | 0 |
| Amber [s] | 0.0 | 3.7 | 0.0 | 0.0 | 4.4 | 0.0 | 4.8 | 4.8 | 0.0 | 4.8 | 4.8 | 0.0 |
| All red [s] | 0.0 | 1.0 | 0.0 | 0.0 | 1.0 | 0.0 | 1.0 | 1.0 | 0.0 | 1.0 | 1.0 | 0.0 |
| Split [s] | 0 | 38 | 0 | 0 | 38 | 0 | 45 | 70 | 0 | 12 | 37 | 0 |
| Vehicle Extension [s] | 0.0 | 3.0 | 0.0 | 0.0 | 3.0 | 0.0 | 3.0 | 3.0 | 0.0 | 3.0 | 3.0 | 0.0 |
| Walk [s] | 0 | 7 | 0 | 0 | 7 | 0 | 0 | 7 | 0 | 0 | 7 | 0 |
| Pedestrian Clearance [s] | 0 | 26 | 0 | 0 | 10 | 0 | 0 | 16 | 0 | 0 | 19 | 0 |
| I1, Start-Up Lost Time [s] | 0.0 | 2.0 | 0.0 | 0.0 | 2.0 | 0.0 | 2.0 | 2.0 | 0.0 | 2.0 | 2.0 | 0.0 |
| I2, Clearance Lost Time [s] | 0.0 | 2.7 | 0.0 | 0.0 | 3.4 | 0.0 | 3.8 | 3.8 | 0.0 | 3.8 | 3.8 | 0.0 |
| Minimum Recall | | No | | | No | | No | No | | No | No | |
| Maximum Recall | | No | | | No | | No | No | | No | No | |
| Pedestrian Recall | | No | | | No | | No | No | | No | No | |
| Detector Location [ft] | 0.0 | 0.0 | 0.0 | 0.0 | 0.0 | 0.0 | 0.0 | 0.0 | 0.0 | 0.0 | 0.0 | 0.0 |
| Detector Length [ft] | 0.0 | 0.0 | 0.0 | 0.0 | 0.0 | 0.0 | 0.0 | 0.0 | 0.0 | 0.0 | 0.0 | 0.0 |
| I, Upstream Filtering Factor | 1.00 | 1.00 | 1.00 | 1.00 | 1.00 | 1.00 | 1.00 | 1.00 | 1.00 | 1.00 | 1.00 | 1.00 |

**Exclusive Pedestrian Phase**

| | |
|---|---|
| Pedestrian Signal Group | 0 |
| Pedestrian Walk [s] | 0 |
| Pedestrian Clearance [s] | 0 |

**Lane Group Calculations**

| Lane Group | C | C | L | C | C | L | C | C |
|---|---|---|---|---|---|---|---|---|
| L, Total Lost Time per Cycle [s] | 4.70 | 5.40 | 5.80 | 5.80 | 5.80 | 5.80 | 5.80 | 5.80 |
| l1_p, Permitted Start-Up Lost Time [s] | 2.00 | 2.00 | 0.00 | 0.00 | 0.00 | 0.00 | 0.00 | 0.00 |
| l2, Clearance Lost Time [s] | 0.00 | 3.40 | 3.80 | 3.80 | 3.80 | 3.80 | 3.80 | 3.80 |
| g_i, Effective Green Time [s] | 14 | 14 | 26 | 85 | 85 | 5 | 63 | 63 |
| g / C, Green / Cycle | 0.12 | 0.11 | 0.22 | 0.71 | 0.71 | 0.04 | 0.53 | 0.53 |
| (v / s)_i Volume / Saturation Flow Rate | 0.04 | 0.10 | 0.20 | 0.16 | 0.16 | 0.03 | 0.12 | 0.13 |
| s, saturation flow rate [veh/h] | 1593 | 1487 | 1740 | 1827 | 1800 | 1740 | 1827 | 1613 |
| c, Capacity [veh/h] | 200 | 211 | 376 | 1290 | 1271 | 67 | 966 | 853 |
| d1, Uniform Delay [s] | 48.20 | 52.22 | 41.72 | 1.08 | 1.08 | 56.36 | 9.12 | 9.15 |
| k, delay calibration | 0.11 | 0.11 | 0.11 | 0.50 | 0.50 | 0.11 | 0.50 | 0.50 |
| I, Upstream Filtering Factor | 1.00 | 1.00 | 1.00 | 1.00 | 1.00 | 1.00 | 1.00 | 1.00 |
| d2, Incremental Delay [s] | 0.83 | 4.00 | 9.49 | 0.41 | 0.42 | 16.70 | 0.57 | 0.67 |
| d3, Initial Queue Delay [s] | 0.00 | 0.00 | 0.00 | 0.00 | 0.00 | 0.00 | 0.00 | 0.00 |
| Rp, platoon ratio | 1.00 | 1.00 | 1.33 | 1.33 | 1.33 | 1.33 | 1.33 | 1.33 |
| PF, progression factor | 1.00 | 1.00 | 1.00 | 1.00 | 1.00 | 1.00 | 1.00 | 1.00 |

**Lane Group Results**

| | | | | | | | | |
|---|---|---|---|---|---|---|---|---|
| X, volume / capacity | 0.30 | 0.69 | 0.92 | 0.23 | 0.23 | 0.77 | 0.23 | 0.24 |
| d, Delay for Lane Group [s/veh] | 49.03 | 56.22 | 51.21 | 1.49 | 1.50 | 73.07 | 9.69 | 9.82 |
| Lane Group LOS | D | E | D | A | A | E | A | A |
| Critical Lane Group | No | Yes | Yes | No | No | No | No | Yes |
| 50th-Percentile Queue Length [veh] | 1.69 | 4.48 | 9.93 | 0.53 | 0.52 | 1.82 | 2.03 | 1.87 |
| 50th-Percentile Queue Length [ft] | 42.29 | 111.88 | 248.14 | 13.18 | 13.04 | 45.46 | 50.70 | 46.73 |
| 95th-Percentile Queue Length [veh] | 3.04 | 7.94 | 15.09 | 0.95 | 0.94 | 3.27 | 3.65 | 3.36 |
| 95th-Percentile Queue Length [ft] | 76.12 | 198.61 | 377.31 | 23.72 | 23.48 | 81.83 | 91.26 | 84.12 |

**Movement, Approach, & Intersection Results**

| | | | | | | | | | | | | |
|---|---|---|---|---|---|---|---|---|---|---|---|---|
| d_M, Delay for Movement [s/veh] | 49.03 | 49.03 | 49.03 | 56.22 | 56.22 | 56.22 | 51.21 | 1.49 | 1.50 | 73.07 | 9.72 | 9.82 |
| Movement LOS | D | D | D | E | E | E | D | A | A | E | A | A |
| d_A, Approach Delay [s/veh] | 49.03 | | | 56.22 | | | 20.05 | | | 16.54 | | |
| Approach LOS | D | | | E | | | C | | | B | | |
| d_I, Intersection Delay [s/veh] | 23.34 | | | | | | | | | | | |
| Intersection LOS | C | | | | | | | | | | | |
| Intersection V/C | 0.472 | | | | | | | | | | | |

## Sequence

| | | | | | | | | | | | | | | | | |
|---|---|---|---|---|---|---|---|---|---|---|---|---|---|---|---|---|
| Ring 1 | 2 | 3 | 4 | - | - | - | - | - | - | - | - | - | - | - | - | - |
| Ring 2 | 6 | 7 | 8 | - | - | - | - | - | - | - | - | - | - | - | - | - |
| Ring 3 | - | - | - | - | - | - | - | - | - | - | - | - | - | - | - | - |
| Ring 4 | - | - | - | - | - | - | - | - | - | - | - | - | - | - | - | - |

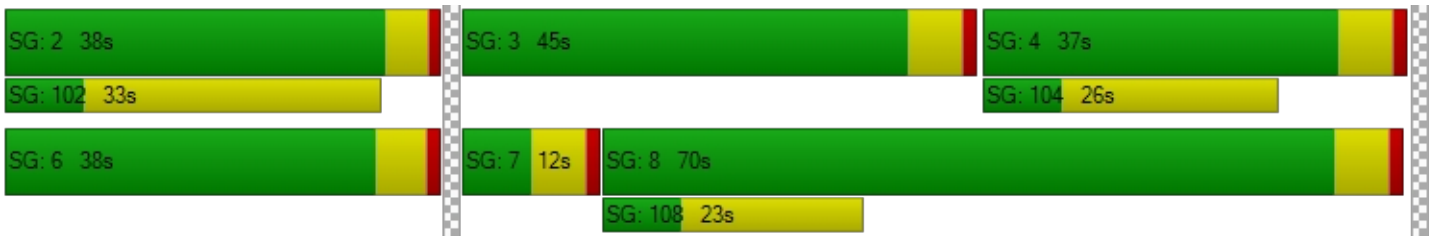

**Intersection Level Of Service Report**
**Intersection 11: Cedar Ave (NS) / San Bernardino Ave (EW)**

| | | | |
|---|---|---|---|
| Control Type: | Signalized | Delay (sec / veh): | 27.5 |
| Analysis Method: | HCM 2010 | Level Of Service: | C |
| Analysis Period: | 15 minutes | Volume to Capacity (v/c): | 0.671 |

**Intersection Setup**

| Name | Cedar Avenue | | | Cedar Avenue | | | | | | San Bernardino Avenue | | |
|---|---|---|---|---|---|---|---|---|---|---|---|---|
| Approach | Northbound | | | Southbound | | | Eastbound | | | Westbound | | |
| Lane Configuration | | | | | | | | | | | | |
| Turning Movement | Left | Thru | Right | Left | Thru | Right | Left | Thru | Right | Left | Thru | Right |
| Lane Width [ft] | 12.00 | 12.00 | 12.00 | 12.00 | 12.00 | 12.00 | 12.00 | 12.00 | 12.00 | 12.00 | 12.00 | 12.00 |
| No. of Lanes in Pocket | 1 | 0 | 0 | 1 | 0 | 0 | 1 | 0 | 1 | 1 | 0 | 0 |
| Pocket Length [ft] | 125.00 | 100.00 | 100.00 | 125.00 | 100.00 | 100.00 | 100.00 | 100.00 | 100.00 | 100.00 | 100.00 | 100.00 |
| Speed [mph] | 40.00 | | | 40.00 | | | 30.00 | | | 40.00 | | |
| Grade [%] | 0.00 | | | 0.00 | | | 0.00 | | | 0.00 | | |
| Crosswalk | Yes | | | Yes | | | Yes | | | Yes | | |

**volumes**

| Name | Cedar Avenue | | | Cedar Avenue | | | | | | San Bernardino Avenue | | |
|---|---|---|---|---|---|---|---|---|---|---|---|---|
| Base Volume Input [veh/h] | 135 | 1026 | 94 | 32 | 717 | 57 | 45 | 303 | 119 | 40 | 245 | 35 |
| Base Volume Adjustment Factor | 1.0000 | 1.0000 | 1.0000 | 1.0000 | 1.0000 | 1.0000 | 1.0000 | 1.0000 | 1.0000 | 1.0000 | 1.0000 | 1.0000 |
| Heavy Vehicles Percentage [%] | 4.00 | 4.00 | 4.00 | 4.00 | 4.00 | 4.00 | 2.00 | 2.00 | 2.00 | 2.00 | 2.00 | 2.00 |
| Growth Rate | 1.00 | 1.00 | 1.00 | 1.00 | 1.00 | 1.00 | 1.00 | 1.00 | 1.00 | 1.00 | 1.00 | 1.00 |
| In-Process Volume [veh/h] | 0 | 0 | 0 | 0 | 0 | 0 | 0 | 0 | 0 | 0 | 0 | 0 |
| Site-Generated Trips [veh/h] | 0 | 0 | 0 | 0 | 0 | 0 | 0 | 0 | 0 | 0 | 0 | 0 |
| Diverted Trips [veh/h] | 0 | 0 | 0 | 0 | 0 | 0 | 0 | 0 | 0 | 0 | 0 | 0 |
| Pass-by Trips [veh/h] | 0 | 0 | 0 | 0 | 0 | 0 | 0 | 0 | 0 | 0 | 0 | 0 |
| Existing Site Adjustment Volume [veh/h] | 0 | 0 | 0 | 0 | 0 | 0 | 0 | 0 | 0 | 0 | 0 | 0 |
| Other Volume [veh/h] | 0 | 0 | 0 | 0 | 0 | 0 | 0 | 0 | 0 | 0 | 0 | 0 |
| Right-Turn on Red Volume [veh/h] | 0 | 0 | 0 | 0 | 0 | 0 | 0 | 0 | 0 | 0 | 0 | 0 |
| Total Hourly Volume [veh/h] | 135 | 1026 | 94 | 32 | 717 | 57 | 45 | 303 | 119 | 40 | 245 | 35 |
| Peak Hour Factor | 0.8870 | 0.8870 | 0.8870 | 0.8870 | 0.8870 | 0.8870 | 0.8870 | 0.8870 | 0.8870 | 0.8870 | 0.8870 | 0.8870 |
| Other Adjustment Factor | 1.0000 | 1.0000 | 1.0000 | 1.0000 | 1.0000 | 1.0000 | 1.0000 | 1.0000 | 1.0000 | 1.0000 | 1.0000 | 1.0000 |
| Total 15-Minute Volume [veh/h] | 38 | 289 | 26 | 9 | 202 | 16 | 13 | 85 | 34 | 11 | 69 | 10 |
| Total Analysis Volume [veh/h] | 152 | 1157 | 106 | 36 | 808 | 64 | 51 | 342 | 134 | 45 | 276 | 39 |
| Presence of On-Street Parking | No | | No | No | | No | No | | No | No | | No |
| On-Street Parking Maneuver Rate [/h] | 0 | 0 | 0 | 0 | 0 | 0 | 0 | 0 | 0 | 0 | 0 | 0 |
| Local Bus Stopping Rate [/h] | 0 | 0 | 0 | 0 | 0 | 0 | 0 | 0 | 0 | 0 | 0 | 0 |
| Pedestrian Volume [ped/h] | 0 | | | 0 | | | 0 | | | 0 | | |
| Bicycle Volume [bicycles/h] | 0 | | | 0 | | | 0 | | | 0 | | |

**Intersection Settings**

| | |
|---|---|
| Located in CBD | No |
| Signal Coordination Group | 2 - NS - Cedar |
| Cycle Length [s] | 120 |
| Coordination Type | Time of Day Pattern Coordinated |
| Actuation Type | Fully actuated |
| Offset [s] | 0.0 |
| Offset Reference | LagFO |
| Permissive Mode | SingleBand |
| Lost time [s] | 16.00 |

**Phasing & Timing**

| Control Type | Protecte | Permiss | Permiss | Protecte | Permiss | Permiss | Protecte | Permiss | Permiss | Protecte | Permiss | Permiss |
|---|---|---|---|---|---|---|---|---|---|---|---|---|
| Signal group | 5 | 2 | 0 | 1 | 6 | 0 | 3 | 8 | 0 | 7 | 4 | 0 |
| Auxiliary Signal Groups | | | | | | | | | | | | |
| Lead / Lag | Lead | - | - | Lead | - | - | Lead | - | - | Lead | - | - |
| Minimum Green [s] | 5 | 5 | 0 | 5 | 5 | 0 | 5 | 5 | 0 | 5 | 5 | 0 |
| Maximum Green [s] | 30 | 30 | 0 | 30 | 30 | 0 | 30 | 30 | 0 | 30 | 30 | 0 |
| Amber [s] | 4.4 | 4.4 | 0.0 | 4.4 | 4.4 | 0.0 | 3.7 | 3.7 | 0.0 | 4.4 | 4.4 | 0.0 |
| All red [s] | 1.0 | 1.0 | 0.0 | 1.0 | 1.0 | 0.0 | 1.0 | 1.0 | 0.0 | 1.0 | 1.0 | 0.0 |
| Split [s] | 18 | 57 | 0 | 11 | 50 | 0 | 10 | 41 | 0 | 11 | 42 | 0 |
| Vehicle Extension [s] | 3.0 | 3.0 | 0.0 | 3.0 | 3.0 | 0.0 | 3.0 | 3.0 | 0.0 | 3.0 | 3.0 | 0.0 |
| Walk [s] | 0 | 7 | 0 | 0 | 7 | 0 | 0 | 7 | 0 | 0 | 7 | 0 |
| Pedestrian Clearance [s] | 0 | 24 | 0 | 0 | 24 | 0 | 0 | 29 | 0 | 0 | 29 | 0 |
| I1, Start-Up Lost Time [s] | 2.0 | 2.0 | 0.0 | 2.0 | 2.0 | 0.0 | 2.0 | 2.0 | 0.0 | 2.0 | 2.0 | 0.0 |
| I2, Clearance Lost Time [s] | 3.4 | 3.4 | 0.0 | 3.4 | 3.4 | 0.0 | 2.7 | 2.7 | 0.0 | 3.4 | 3.4 | 0.0 |
| Minimum Recall | No | No | | No | No | | No | No | | No | No | |
| Maximum Recall | No | No | | No | No | | No | No | | No | No | |
| Pedestrian Recall | No | No | | No | No | | No | No | | No | No | |
| Detector Location [ft] | 0.0 | 0.0 | 0.0 | 0.0 | 0.0 | 0.0 | 0.0 | 0.0 | 0.0 | 0.0 | 0.0 | 0.0 |
| Detector Length [ft] | 0.0 | 0.0 | 0.0 | 0.0 | 0.0 | 0.0 | 0.0 | 0.0 | 0.0 | 0.0 | 0.0 | 0.0 |
| I, Upstream Filtering Factor | 1.00 | 1.00 | 1.00 | 1.00 | 1.00 | 1.00 | 1.00 | 1.00 | 1.00 | 1.00 | 1.00 | 1.00 |

**Exclusive Pedestrian Phase**

| | |
|---|---|
| Pedestrian Signal Group | 0 |
| Pedestrian Walk [s] | 0 |
| Pedestrian Clearance [s] | 0 |

**Lane Group Calculations**

| Lane Group | L | C | C | L | C | C | L | C | R | L | C | C |
|---|---|---|---|---|---|---|---|---|---|---|---|---|
| L, Total Lost Time per Cycle [s] | 5.40 | 5.40 | 5.40 | 5.40 | 5.40 | 5.40 | 4.70 | 4.70 | 4.70 | 5.40 | 5.40 | 5.40 |
| l1_p, Permitted Start-Up Lost Time [s] | 0.00 | 0.00 | 0.00 | 0.00 | 0.00 | 0.00 | 0.00 | 0.00 | 0.00 | 0.00 | 0.00 | 0.00 |
| l2, Clearance Lost Time [s] | 3.40 | 3.40 | 3.40 | 3.40 | 3.40 | 3.40 | 2.70 | 2.70 | 2.70 | 3.40 | 3.40 | 3.40 |
| g_i, Effective Green Time [s] | 12 | 67 | 67 | 4 | 58 | 58 | 4 | 25 | 25 | 4 | 24 | 24 |
| g / C, Green / Cycle | 0.10 | 0.56 | 0.56 | 0.03 | 0.49 | 0.49 | 0.04 | 0.20 | 0.20 | 0.03 | 0.20 | 0.20 |
| (v / s)_i Volume / Saturation Flow Rate | 0.09 | 0.35 | 0.35 | 0.02 | 0.24 | 0.24 | 0.03 | 0.18 | 0.08 | 0.03 | 0.09 | 0.09 |
| s, saturation flow rate [veh/h] | 1740 | 1827 | 1774 | 1740 | 1827 | 1780 | 1774 | 1863 | 1583 | 1774 | 1863 | 1784 |
| c, Capacity [veh/h] | 178 | 1020 | 990 | 52 | 888 | 865 | 67 | 381 | 324 | 59 | 373 | 357 |
| d1, Uniform Delay [s] | 51.01 | 9.36 | 9.39 | 57.08 | 13.51 | 13.51 | 57.24 | 46.55 | 41.52 | 57.56 | 42.03 | 42.09 |
| k, delay calibration | 0.23 | 0.50 | 0.50 | 0.11 | 0.50 | 0.50 | 0.11 | 0.14 | 0.11 | 0.11 | 0.11 | 0.11 |
| I, Upstream Filtering Factor | 1.00 | 1.00 | 1.00 | 1.00 | 1.00 | 1.00 | 1.00 | 1.00 | 1.00 | 1.00 | 1.00 | 1.00 |
| d2, Incremental Delay [s] | 20.93 | 2.91 | 3.04 | 14.90 | 1.99 | 2.04 | 16.10 | 9.84 | 0.85 | 17.81 | 0.78 | 0.84 |
| d3, Initial Queue Delay [s] | 0.00 | 0.00 | 0.00 | 0.00 | 0.00 | 0.00 | 0.00 | 0.00 | 0.00 | 0.00 | 0.00 | 0.00 |
| Rp, platoon ratio | 1.33 | 1.33 | 1.33 | 1.33 | 1.33 | 1.33 | 1.00 | 1.00 | 1.00 | 1.00 | 1.00 | 1.00 |
| PF, progression factor | 1.00 | 1.00 | 1.00 | 1.00 | 1.00 | 1.00 | 1.00 | 1.00 | 1.00 | 1.00 | 1.00 | 1.00 |

**Lane Group Results**

| | | | | | | | | | | | | |
|---|---|---|---|---|---|---|---|---|---|---|---|---|
| X, volume / capacity | 0.86 | 0.63 | 0.63 | 0.69 | 0.50 | 0.50 | 0.76 | 0.90 | 0.41 | 0.76 | 0.43 | 0.44 |
| d, Delay for Lane Group [s/veh] | 71.94 | 12.27 | 12.43 | 71.99 | 15.49 | 15.55 | 73.34 | 56.39 | 42.37 | 75.37 | 42.81 | 42.93 |
| Lane Group LOS | E | B | B | E | B | B | E | E | D | E | D | D |
| Critical Lane Group | No | No | Yes | Yes | No | No | No | Yes | No | Yes | No | No |
| 50th-Percentile Queue Length [veh] | 5.28 | 6.08 | 5.98 | 1.27 | 5.47 | 5.35 | 1.83 | 10.95 | 3.54 | 1.63 | 4.15 | 4.06 |
| 50th-Percentile Queue Length [ft] | 132.05 | 151.95 | 149.42 | 31.80 | 136.84 | 133.67 | 45.84 | 273.67 | 88.45 | 40.70 | 103.86 | 101.43 |
| 95th-Percentile Queue Length [veh] | 9.05 | 10.12 | 9.99 | 2.29 | 9.31 | 9.14 | 3.30 | 16.37 | 6.37 | 2.93 | 7.48 | 7.30 |
| 95th-Percentile Queue Length [ft] | 226.28 | 253.04 | 249.65 | 57.24 | 232.77 | 228.48 | 82.52 | 409.32 | 159.21 | 73.25 | 186.94 | 182.57 |

**Movement, Approach, & Intersection Results**

| | | | | | | | | | | | | |
|---|---|---|---|---|---|---|---|---|---|---|---|---|
| d_M, Delay for Movement [s/veh] | 71.94 | 12.34 | 12.43 | 71.99 | 15.52 | 15.55 | 73.34 | 56.39 | 42.37 | 75.37 | 42.86 | 42.93 |
| Movement LOS | E | B | B | E | B | B | E | E | D | E | D | D |
| d_A, Approach Delay [s/veh] | 18.75 | | | 17.76 | | | 54.46 | | | 46.93 | | |
| Approach LOS | B | | | B | | | D | | | D | | |
| d_I, Intersection Delay [s/veh] | 27.49 | | | | | | | | | | | |
| Intersection LOS | C | | | | | | | | | | | |
| Intersection V/C | 0.671 | | | | | | | | | | | |

## Sequence

| | | | | | | | | | | | | | | | | |
|---|---|---|---|---|---|---|---|---|---|---|---|---|---|---|---|---|
| Ring 1 | 1 | 2 | 3 | 4 | - | - | - | - | - | - | - | - | - | - | - | - |
| Ring 2 | 5 | 6 | 7 | 8 | - | - | - | - | - | - | - | - | - | - | - | - |
| Ring 3 | - | - | - | - | - | - | - | - | - | - | - | - | - | - | - | - |
| Ring 4 | - | - | - | - | - | - | - | - | - | - | - | - | - | - | - | - |

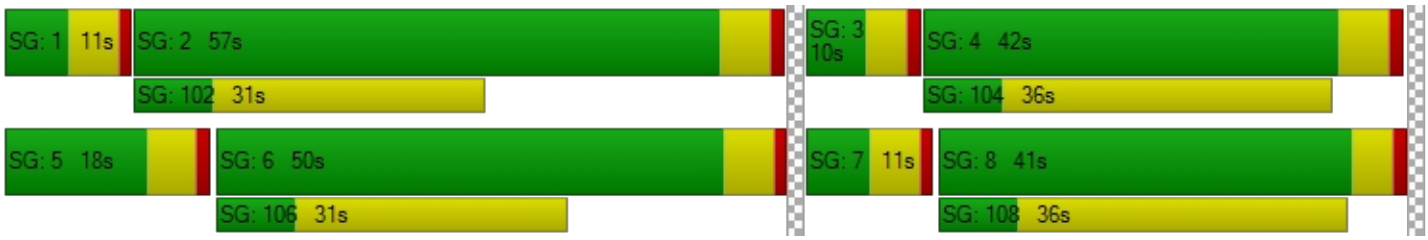

**Intersection Level Of Service Report**
**Intersection 12: Cedar Ave (NS) / Bloomington Ave (EW)**

| | | | |
|---|---|---|---|
| Control Type: | Signalized | Delay (sec / veh): | 15.7 |
| Analysis Method: | HCM 2010 | Level Of Service: | B |
| Analysis Period: | 15 minutes | Volume to Capacity (v/c): | 0.614 |

**Intersection Setup**

| Name | Cedar Avenue | | Cedar Avenue | | Bloomington Avenue | |
|---|---|---|---|---|---|---|
| Approach | Northbound | | Southbound | | Westbound | |
| Lane Configuration | | | | | | |
| Turning Movement | Thru | Right | Left | Thru | Left | Right |
| Lane Width [ft] | 12.00 | 12.00 | 12.00 | 12.00 | 12.00 | 12.00 |
| No. of Lanes in Pocket | 0 | 0 | 1 | 0 | 0 | 1 |
| Pocket Length [ft] | 100.00 | 100.00 | 100.00 | 100.00 | 100.00 | 125.00 |
| Speed [mph] | 40.00 | | 40.00 | | 45.00 | |
| Grade [%] | 0.00 | | 0.00 | | 0.00 | |
| Crosswalk | No | | Yes | | No | |

**volumes**

| Name | Cedar Avenue | | Cedar Avenue | | Bloomington Avenue | |
|---|---|---|---|---|---|---|
| Base Volume Input [veh/h] | 1224 | 843 | 72 | 836 | 500 | 57 |
| Base Volume Adjustment Factor | 1.0000 | 0.0000 | 1.0000 | 1.0000 | 1.0000 | 1.0000 |
| Heavy Vehicles Percentage [%] | 4.00 | 4.00 | 4.00 | 4.00 | 4.00 | 4.00 |
| Growth Rate | 1.00 | 1.00 | 1.00 | 1.00 | 1.00 | 1.00 |
| In-Process Volume [veh/h] | 0 | 0 | 0 | 0 | 0 | 0 |
| Site-Generated Trips [veh/h] | 0 | 0 | 0 | 0 | 0 | 0 |
| Diverted Trips [veh/h] | 0 | 0 | 0 | 0 | 0 | 0 |
| Pass-by Trips [veh/h] | 0 | 0 | 0 | 0 | 0 | 0 |
| Existing Site Adjustment Volume [veh/h] | 0 | 0 | 0 | 0 | 0 | 0 |
| Other Volume [veh/h] | 0 | 0 | 0 | 0 | 0 | 0 |
| Right-Turn on Red Volume [veh/h] | 0 | 0 | 0 | 0 | 0 | 0 |
| Total Hourly Volume [veh/h] | 1224 | 0 | 72 | 836 | 500 | 57 |
| Peak Hour Factor | 0.9480 | 0.9480 | 0.9480 | 0.9480 | 0.9480 | 0.9480 |
| Other Adjustment Factor | 1.0000 | 1.0000 | 1.0000 | 1.0000 | 1.0000 | 1.0000 |
| Total 15-Minute Volume [veh/h] | 323 | 0 | 19 | 220 | 132 | 15 |
| Total Analysis Volume [veh/h] | 1291 | 0 | 76 | 882 | 527 | 60 |
| Presence of On-Street Parking | No | No | No | No | No | No |
| On-Street Parking Maneuver Rate [/h] | 0 | 0 | 0 | 0 | 0 | 0 |
| Local Bus Stopping Rate [/h] | 0 | 0 | 0 | 0 | 0 | 0 |
| Pedestrian Volume [ped/h] | 0 | | 0 | | 0 | |
| Bicycle Volume [bicycles/h] | 0 | | 0 | | 0 | |

**Intersection Settings**

| | |
|---|---|
| Located in CBD | No |
| Signal Coordination Group | 2 - NS - Cedar |
| Cycle Length [s] | 120 |
| Coordination Type | Time of Day Pattern Coordinated |
| Actuation Type | Fully actuated |
| Offset [s] | 85.0 |
| Offset Reference | LagFO |
| Permissive Mode | SingleBand |
| Lost time [s] | 12.00 |

**Phasing & Timing**

| Control Type | Permissive | Permissive | Protected | Permissive | Split | Split |
|---|---|---|---|---|---|---|
| Signal group | 2 | 0 | 1 | 6 | 7 | 0 |
| Auxiliary Signal Groups | | | | | | |
| Lead / Lag | - | - | Lead | - | Lead | - |
| Minimum Green [s] | 5 | 0 | 5 | 5 | 5 | 0 |
| Maximum Green [s] | 30 | 0 | 30 | 30 | 30 | 0 |
| Amber [s] | 4.4 | 0.0 | 4.4 | 4.4 | 4.8 | 0.0 |
| All red [s] | 1.0 | 0.0 | 1.0 | 1.0 | 1.0 | 0.0 |
| Split [s] | 66 | 0 | 18 | 84 | 36 | 0 |
| Vehicle Extension [s] | 3.0 | 0.0 | 3.0 | 3.0 | 3.0 | 0.0 |
| Walk [s] | 7 | 0 | 0 | 7 | 7 | 0 |
| Pedestrian Clearance [s] | 10 | 0 | 0 | 10 | 23 | 0 |
| I1, Start-Up Lost Time [s] | 2.0 | 0.0 | 2.0 | 2.0 | 2.0 | 0.0 |
| I2, Clearance Lost Time [s] | 3.4 | 0.0 | 3.4 | 3.4 | 3.8 | 0.0 |
| Minimum Recall | No | | No | No | No | |
| Maximum Recall | No | | No | No | No | |
| Pedestrian Recall | No | | No | No | No | |
| Detector Location [ft] | 0.0 | 0.0 | 0.0 | 0.0 | 0.0 | 0.0 |
| Detector Length [ft] | 0.0 | 0.0 | 0.0 | 0.0 | 0.0 | 0.0 |
| I, Upstream Filtering Factor | 1.00 | 1.00 | 1.00 | 1.00 | 1.00 | 1.00 |

**Exclusive Pedestrian Phase**

| | |
|---|---|
| Pedestrian Signal Group | 0 |
| Pedestrian Walk [s] | 0 |
| Pedestrian Clearance [s] | 0 |

**Lane Group Calculations**

| Lane Group | C | C | R | L | C | L | R |
|---|---|---|---|---|---|---|---|
| L, Total Lost Time per Cycle [s] | 5.40 | 5.40 | 5.40 | 5.40 | 5.40 | 5.80 | 5.80 |
| l1_p, Permitted Start-Up Lost Time [s] | 0.00 | 0.00 | 0.00 | 0.00 | 0.00 | 0.00 | 0.00 |
| l2, Clearance Lost Time [s] | 3.40 | 3.40 | 3.40 | 3.40 | 3.40 | 3.80 | 3.80 |
| g_i, Effective Green Time [s] | 75 | 75 | 75 | 7 | 87 | 22 | 22 |
| g / C, Green / Cycle | 0.63 | 0.63 | 0.63 | 0.06 | 0.73 | 0.18 | 0.18 |
| (v / s)_i Volume / Saturation Flow Rate | 0.35 | 0.35 | 0.00 | 0.04 | 0.25 | 0.16 | 0.04 |
| s, saturation flow rate [veh/h] | 1827 | 1827 | 1553 | 1740 | 3478 | 3379 | 1553 |
| c, Capacity [veh/h] | 1145 | 1145 | 973 | 97 | 2530 | 606 | 278 |
| d1, Uniform Delay [s] | 4.76 | 4.76 | 0.00 | 54.82 | 0.51 | 47.87 | 42.03 |
| k, delay calibration | 0.50 | 0.50 | 0.50 | 0.11 | 0.50 | 0.11 | 0.11 |
| I, Upstream Filtering Factor | 1.00 | 1.00 | 1.00 | 1.00 | 1.00 | 1.00 | 1.00 |
| d2, Incremental Delay [s] | 2.01 | 2.01 | 0.00 | 12.94 | 0.38 | 4.03 | 0.38 |
| d3, Initial Queue Delay [s] | 0.00 | 0.00 | 0.00 | 0.00 | 0.00 | 0.00 | 0.00 |
| Rp, platoon ratio | 1.33 | 1.33 | 1.33 | 1.33 | 1.33 | 1.00 | 1.00 |
| PF, progression factor | 1.00 | 1.00 | 1.00 | 1.00 | 1.00 | 1.00 | 1.00 |

**Lane Group Results**

| | | | | | | | |
|---|---|---|---|---|---|---|---|
| X, volume / capacity | 0.56 | 0.56 | 0.00 | 0.79 | 0.35 | 0.87 | 0.22 |
| d, Delay for Lane Group [s/veh] | 6.77 | 6.77 | 0.00 | 67.76 | 0.89 | 51.90 | 42.41 |
| Lane Group LOS | A | A | A | E | A | D | D |
| Critical Lane Group | Yes | No | No | Yes | No | Yes | No |
| 50th-Percentile Queue Length [veh] | 3.70 | 3.70 | 0.00 | 2.54 | 0.42 | 7.76 | 1.51 |
| 50th-Percentile Queue Length [ft] | 92.45 | 92.45 | 0.00 | 63.47 | 10.57 | 194.11 | 37.85 |
| 95th-Percentile Queue Length [veh] | 6.66 | 6.66 | 0.00 | 4.57 | 0.76 | 12.33 | 2.73 |
| 95th-Percentile Queue Length [ft] | 166.41 | 166.41 | 0.00 | 114.24 | 19.02 | 308.35 | 68.14 |

**Movement, Approach, & Intersection Results**

| | | | | | | |
|---|---|---|---|---|---|---|
| d_M, Delay for Movement [s/veh] | 6.77 | 3.39 | 67.76 | 0.89 | 51.90 | 42.41 |
| Movement LOS | A | A | E | A | D | D |
| d_A, Approach Delay [s/veh] | 6.77 | | 6.20 | | 50.93 | |
| Approach LOS | A | | A | | D | |
| d_I, Intersection Delay [s/veh] | 15.72 | | | | | |
| Intersection LOS | B | | | | | |
| Intersection V/C | 0.614 | | | | | |

## Sequence

| | | | | | | | | | | | | | | | | |
|---|---|---|---|---|---|---|---|---|---|---|---|---|---|---|---|---|
| Ring 1 | 1 | 2 | - | - | - | - | - | - | - | - | - | - | - | - | - | - |
| Ring 2 | - | 6 | 7 | - | - | - | - | - | - | - | - | - | - | - | - | - |
| Ring 3 | - | - | - | - | - | - | - | - | - | - | - | - | - | - | - | - |
| Ring 4 | - | - | - | - | - | - | - | - | - | - | - | - | - | - | - | - |

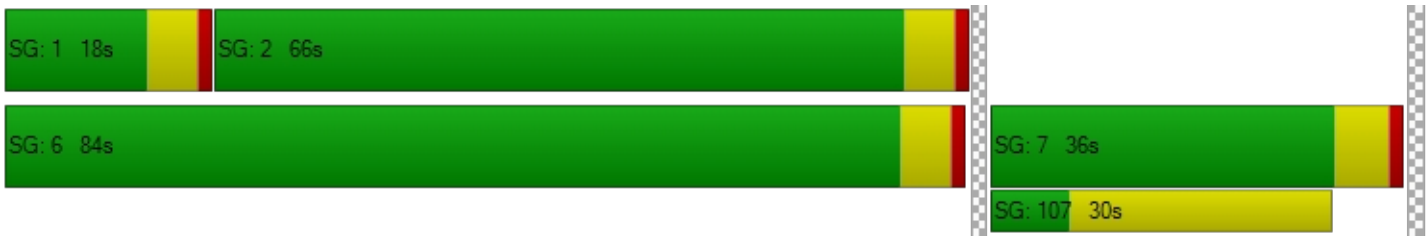

**Intersection Level Of Service Report**
**Intersection 13: Cedar Ave (NS) / Valley Blvd (EW)**

| | | | |
|---|---|---|---|
| Control Type: | Signalized | Delay (sec / veh): | 56.7 |
| Analysis Method: | HCM 2010 | Level Of Service: | E |
| Analysis Period: | 15 minutes | Volume to Capacity (v/c): | 0.957 |

**Intersection Setup**

| Name | Cedar Avenue | | | Cedar Avenue | | | | | | Valley Boulevard | | |
|---|---|---|---|---|---|---|---|---|---|---|---|---|
| Approach | Northbound | | | Southbound | | | Eastbound | | | Westbound | | |
| Lane Configuration | | | | | | | | | | | | |
| Turning Movement | Left | Thru | Right | Left | Thru | Right | Left | Thru | Right | Left | Thru | Right |
| Lane Width [ft] | 12.00 | 12.00 | 12.00 | 12.00 | 12.00 | 12.00 | 12.00 | 12.00 | 12.00 | 12.00 | 12.00 | 12.00 |
| No. of Lanes in Pocket | 2 | 0 | 1 | 2 | 0 | 0 | 2 | 0 | 1 | 2 | 0 | 0 |
| Pocket Length [ft] | 235.00 | 100.00 | 100.00 | 155.00 | 100.00 | 100.00 | 300.00 | 100.00 | 300.00 | 375.00 | 100.00 | 100.00 |
| Speed [mph] | 40.00 | | | 40.00 | | | 30.00 | | | 40.00 | | |
| Grade [%] | 0.00 | | | 0.00 | | | 0.00 | | | 0.00 | | |
| Crosswalk | Yes | | | Yes | | | Yes | | | Yes | | |

**volumes**

| Name | Cedar Avenue | | | Cedar Avenue | | | | | | Valley Boulevard | | |
|---|---|---|---|---|---|---|---|---|---|---|---|---|
| Base Volume Input [veh/h] | 347 | 1862 | 247 | 140 | 1136 | 9 | 137 | 264 | 240 | 283 | 192 | 105 |
| Base Volume Adjustment Factor | 1.0000 | 1.0000 | 1.0000 | 1.0000 | 1.0000 | 1.0000 | 1.0000 | 1.0000 | 1.0000 | 1.0000 | 1.0000 | 1.0000 |
| Heavy Vehicles Percentage [%] | 5.00 | 5.00 | 5.00 | 4.00 | 4.00 | 4.00 | 4.00 | 4.00 | 4.00 | 4.00 | 4.00 | 4.00 |
| Growth Rate | 1.00 | 1.00 | 1.00 | 1.00 | 1.00 | 1.00 | 1.00 | 1.00 | 1.00 | 1.00 | 1.00 | 1.00 |
| In-Process Volume [veh/h] | 0 | 0 | 0 | 0 | 0 | 0 | 0 | 0 | 0 | 0 | 0 | 0 |
| Site-Generated Trips [veh/h] | 0 | 0 | 0 | 0 | 0 | 0 | 0 | 0 | 0 | 0 | 0 | 0 |
| Diverted Trips [veh/h] | 0 | 0 | 0 | 0 | 0 | 0 | 0 | 0 | 0 | 0 | 0 | 0 |
| Pass-by Trips [veh/h] | 0 | 0 | 0 | 0 | 0 | 0 | 0 | 0 | 0 | 0 | 0 | 0 |
| Existing Site Adjustment Volume [veh/h] | 0 | 0 | 0 | 0 | 0 | 0 | 0 | 0 | 0 | 0 | 0 | 0 |
| Other Volume [veh/h] | 0 | 0 | 0 | 0 | 0 | 0 | 0 | 0 | 0 | 0 | 0 | 0 |
| Right-Turn on Red Volume [veh/h] | 0 | 0 | 0 | 0 | 0 | 0 | 0 | 0 | 0 | 0 | 0 | 0 |
| Total Hourly Volume [veh/h] | 347 | 1862 | 247 | 140 | 1136 | 9 | 137 | 264 | 240 | 283 | 192 | 105 |
| Peak Hour Factor | 0.9760 | 0.9760 | 0.9760 | 0.9760 | 0.9760 | 0.9760 | 0.9760 | 0.9760 | 0.9760 | 0.9760 | 0.9760 | 0.9760 |
| Other Adjustment Factor | 1.0000 | 1.0000 | 1.0000 | 1.0000 | 1.0000 | 1.0000 | 1.0000 | 1.0000 | 1.0000 | 1.0000 | 1.0000 | 1.0000 |
| Total 15-Minute Volume [veh/h] | 89 | 477 | 63 | 36 | 291 | 2 | 35 | 68 | 61 | 72 | 49 | 27 |
| Total Analysis Volume [veh/h] | 356 | 1908 | 253 | 143 | 1164 | 9 | 140 | 270 | 246 | 290 | 197 | 108 |
| Presence of On-Street Parking | No | | No | No | | No | No | | No | No | | No |
| On-Street Parking Maneuver Rate [/h] | 0 | 0 | 0 | 0 | 0 | 0 | 0 | 0 | 0 | 0 | 0 | 0 |
| Local Bus Stopping Rate [/h] | 0 | 0 | 0 | 0 | 0 | 0 | 0 | 0 | 0 | 0 | 0 | 0 |
| Pedestrian Volume [ped/h] | 0 | | | 0 | | | 0 | | | 0 | | |
| Bicycle Volume [bicycles/h] | 0 | | | 0 | | | 0 | | | 0 | | |

**Intersection Settings**

| | |
|---|---|
| Located in CBD | No |
| Signal Coordination Group | 2 - NS - Cedar |
| Cycle Length [s] | 120 |
| Coordination Type | Time of Day Pattern Coordinated |
| Actuation Type | Fully actuated |
| Offset [s] | 76.0 |
| Offset Reference | LagFO |
| Permissive Mode | SingleBand |
| Lost time [s] | 16.00 |

**Phasing & Timing**

| Control Type | Protecte | Permiss | Overlap | Protecte | Permiss | Permiss | Protecte | Permiss | Overlap | Protecte | Permiss | Permiss |
|---|---|---|---|---|---|---|---|---|---|---|---|---|
| Signal group | 5 | 2 | 2 | 1 | 6 | 0 | 3 | 8 | 8 | 7 | 4 | 0 |
| Auxiliary Signal Groups | | | 2,7 | | | | | | 5,8 | | | |
| Lead / Lag | Lead | - | - | Lead | - | - | Lead | - | - | Lead | - | - |
| Minimum Green [s] | 5 | 5 | 5 | 5 | 5 | 0 | 5 | 5 | 5 | 5 | 5 | 0 |
| Maximum Green [s] | 30 | 30 | 30 | 30 | 30 | 0 | 30 | 30 | 30 | 30 | 30 | 0 |
| Amber [s] | 4.4 | 4.4 | 4.4 | 4.4 | 4.4 | 0.0 | 3.7 | 3.7 | 3.7 | 4.4 | 4.4 | 0.0 |
| All red [s] | 1.0 | 1.0 | 1.0 | 1.0 | 1.0 | 0.0 | 1.0 | 1.0 | 1.0 | 1.0 | 1.0 | 0.0 |
| Split [s] | 20 | 56 | 56 | 38 | 47 | 0 | 12 | 22 | 22 | 12 | 21 | 0 |
| Vehicle Extension [s] | 3.0 | 3.0 | 3.0 | 3.0 | 3.0 | 0.0 | 3.0 | 3.0 | 3.0 | 3.0 | 3.0 | 0.0 |
| Walk [s] | 0 | 7 | 7 | 0 | 7 | 0 | 0 | 5 | 5 | 0 | 5 | 0 |
| Pedestrian Clearance [s] | 0 | 28 | 28 | 0 | 27 | 0 | 0 | 10 | 10 | 0 | 10 | 0 |
| I1, Start-Up Lost Time [s] | 2.0 | 2.0 | 2.0 | 2.0 | 2.0 | 0.0 | 2.0 | 2.0 | 2.0 | 2.0 | 2.0 | 0.0 |
| I2, Clearance Lost Time [s] | 3.4 | 3.4 | 3.4 | 3.4 | 3.4 | 0.0 | 2.7 | 2.7 | 2.7 | 3.4 | 3.4 | 0.0 |
| Minimum Recall | No | No | No | No | No | | No | No | No | No | No | |
| Maximum Recall | No | No | No | No | No | | No | No | No | No | No | |
| Pedestrian Recall | No | No | No | No | No | | No | No | No | No | No | |
| Detector Location [ft] | 0.0 | 0.0 | 0.0 | 0.0 | 0.0 | 0.0 | 0.0 | 0.0 | 0.0 | 0.0 | 0.0 | 0.0 |
| Detector Length [ft] | 0.0 | 0.0 | 0.0 | 0.0 | 0.0 | 0.0 | 0.0 | 0.0 | 0.0 | 0.0 | 0.0 | 0.0 |
| I, Upstream Filtering Factor | 1.00 | 1.00 | 1.00 | 1.00 | 1.00 | 1.00 | 1.00 | 1.00 | 1.00 | 1.00 | 1.00 | 1.00 |

**Exclusive Pedestrian Phase**

| | |
|---|---|
| Pedestrian Signal Group | 0 |
| Pedestrian Walk [s] | 0 |
| Pedestrian Clearance [s] | 0 |

**Lane Group Calculations**

| Lane Group | L | C | R | L | C | C | L | C | R | L | C | C |
|---|---|---|---|---|---|---|---|---|---|---|---|---|
| L, Total Lost Time per Cycle [s] | 5.40 | 5.40 | 5.40 | 5.40 | 5.40 | 5.40 | 4.70 | 4.70 | 5.40 | 5.40 | 5.40 | 5.40 |
| l1_p, Permitted Start-Up Lost Time [s] | 0.00 | 0.00 | 0.00 | 0.00 | 0.00 | 0.00 | 0.00 | 0.00 | 0.00 | 0.00 | 0.00 | 0.00 |
| l2, Clearance Lost Time [s] | 3.40 | 3.40 | 0.00 | 3.40 | 3.40 | 3.40 | 2.70 | 2.70 | 0.00 | 3.40 | 3.40 | 3.40 |
| g_i, Effective Green Time [s] | 15 | 58 | 77 | 7 | 51 | 51 | 7 | 20 | 40 | 13 | 27 | 27 |
| g / C, Green / Cycle | 0.12 | 0.48 | 0.64 | 0.06 | 0.42 | 0.42 | 0.06 | 0.17 | 0.33 | 0.11 | 0.22 | 0.22 |
| (v / s)_i Volume / Saturation Flow Rate | 0.11 | 0.55 | 0.16 | 0.04 | 0.22 | 0.22 | 0.04 | 0.15 | 0.09 | 0.09 | 0.09 | 0.09 |
| s, saturation flow rate [veh/h] | 3347 | 3445 | 1538 | 3379 | 3478 | 1820 | 3379 | 1827 | 2749 | 3379 | 1827 | 1614 |
| c, Capacity [veh/h] | 406 | 1666 | 985 | 206 | 1472 | 770 | 194 | 310 | 907 | 378 | 409 | 362 |
| d1, Uniform Delay [s] | 49.46 | 21.33 | 3.42 | 54.07 | 18.67 | 18.67 | 54.50 | 45.22 | 24.45 | 49.56 | 35.62 | 35.68 |
| k, delay calibration | 0.11 | 0.50 | 0.50 | 0.11 | 0.50 | 0.50 | 0.11 | 0.11 | 0.11 | 0.11 | 0.14 | 0.15 |
| I, Upstream Filtering Factor | 1.00 | 1.00 | 1.00 | 1.00 | 1.00 | 1.00 | 1.00 | 1.00 | 1.00 | 1.00 | 1.00 | 1.00 |
| d2, Incremental Delay [s] | 6.15 | 73.00 | 0.63 | 4.16 | 1.33 | 2.53 | 4.99 | 7.58 | 0.16 | 3.27 | 0.82 | 1.00 |
| d3, Initial Queue Delay [s] | 0.00 | 0.00 | 0.00 | 0.00 | 0.00 | 0.00 | 0.00 | 0.00 | 0.00 | 0.00 | 0.00 | 0.00 |
| Rp, platoon ratio | 1.33 | 1.33 | 1.33 | 1.33 | 1.33 | 1.33 | 1.33 | 1.33 | 1.33 | 1.33 | 1.33 | 1.33 |
| PF, progression factor | 1.00 | 1.00 | 1.00 | 1.00 | 1.00 | 1.00 | 1.00 | 1.00 | 1.00 | 1.00 | 1.00 | 1.00 |

**Lane Group Results**

| | | | | | | | | | | | | |
|---|---|---|---|---|---|---|---|---|---|---|---|---|
| X, volume / capacity | 0.88 | 1.15 | 0.26 | 0.69 | 0.52 | 0.52 | 0.72 | 0.87 | 0.27 | 0.77 | 0.39 | 0.40 |
| d, Delay for Lane Group [s/veh] | 55.60 | 94.33 | 4.05 | 58.23 | 20.00 | 21.20 | 59.49 | 52.80 | 24.61 | 52.83 | 36.43 | 36.68 |
| Lane Group LOS | E | F | A | E | C | C | E | D | C | D | D | D |
| Critical Lane Group | No | Yes | No | Yes | No | No | No | Yes | No | Yes | No | No |
| 50th-Percentile Queue Length [veh] | 5.25 | 34.17 | 1.12 | 2.16 | 5.81 | 6.34 | 2.18 | 8.04 | 2.18 | 4.15 | 3.65 | 3.30 |
| 50th-Percentile Queue Length [ft] | 131.37 | 854.16 | 28.00 | 54.04 | 145.34 | 158.50 | 54.40 | 201.02 | 54.62 | 103.74 | 91.17 | 82.53 |
| 95th-Percentile Queue Length [veh] | 9.01 | 48.33 | 2.02 | 3.89 | 9.77 | 10.47 | 3.92 | 12.69 | 3.93 | 7.47 | 6.56 | 5.94 |
| 95th-Percentile Queue Length [ft] | 225.36 | 1208.35 | 50.41 | 97.26 | 244.19 | 261.73 | 97.92 | 317.28 | 98.32 | 186.72 | 164.10 | 148.56 |

**Movement, Approach, & Intersection Results**

| | | | | | | | | | | | | |
|---|---|---|---|---|---|---|---|---|---|---|---|---|
| d_M, Delay for Movement [s/veh] | 55.60 | 94.33 | 4.05 | 58.23 | 20.41 | 21.20 | 59.49 | 52.80 | 24.61 | 52.83 | 36.48 | 36.68 |
| Movement LOS | E | F | A | E | C | C | E | D | C | D | D | D |
| d_A, Approach Delay [s/veh] | 79.78 | | | 24.52 | | | 43.66 | | | 44.48 | | |
| Approach LOS | E | | | C | | | D | | | D | | |
| d_I, Intersection Delay [s/veh] | 56.68 | | | | | | | | | | | |
| Intersection LOS | E | | | | | | | | | | | |
| Intersection V/C | 0.957 | | | | | | | | | | | |

## Sequence

| | | | | | | | | | | | | | | | | |
|---|---|---|---|---|---|---|---|---|---|---|---|---|---|---|---|---|
| Ring 1 | 1 | 2 | 3 | 4 | - | - | - | - | - | - | - | - | - | - | - | - |
| Ring 2 | 5 | 6 | 7 | 8 | - | - | - | - | - | - | - | - | - | - | - | - |
| Ring 3 | - | - | - | - | - | - | - | - | - | - | - | - | - | - | - | - |
| Ring 4 | - | - | - | - | - | - | - | - | - | - | - | - | - | - | - | - |

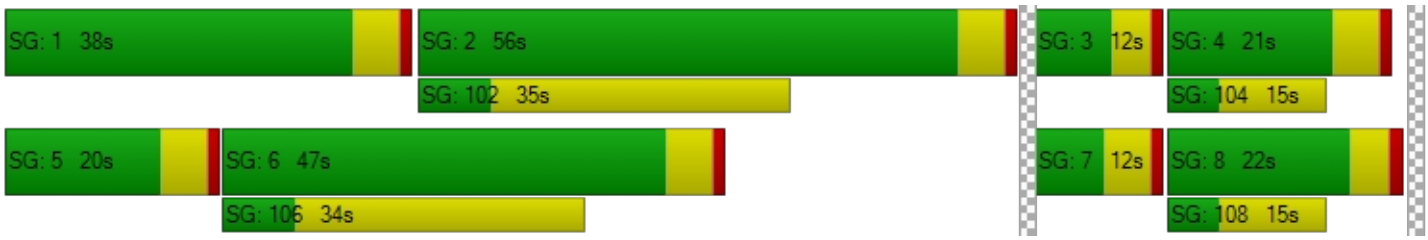

**Intersection Level Of Service Report**
**Intersection 14: Cedar Ave (NS) / I-10 Westbound Ramps (EW)**

| | | | |
|---|---|---|---|
| Control Type: | Signalized | Delay (sec / veh): | 80.4 |
| Analysis Method: | HCM 2010 | Level Of Service: | F |
| Analysis Period: | 15 minutes | Volume to Capacity (v/c): | 1.157 |

**Intersection Setup**

| Name | Cedar Avenue | | | Cedar Avenue | | | | | | I-10 Westbound Ramps | | |
|---|---|---|---|---|---|---|---|---|---|---|---|---|
| Approach | Northbound | | | Southbound | | | Eastbound | | | Westbound | | |
| Lane Configuration | | | | | | | | | | | | |
| Turning Movement | Left | Thru | Right | Left | Thru | Right | Left | Thru | Right | Left | Thru | Right |
| Lane Width [ft] | 12.00 | 12.00 | 12.00 | 12.00 | 12.00 | 12.00 | 12.00 | 12.00 | 12.00 | 12.00 | 12.00 | 12.00 |
| No. of Lanes in Pocket | 1 | 0 | 0 | 0 | 0 | 1 | 0 | 0 | 0 | 0 | 0 | 1 |
| Pocket Length [ft] | 305.00 | 100.00 | 100.00 | 100.00 | 100.00 | 100.00 | 100.00 | 100.00 | 100.00 | 100.00 | 100.00 | 485.00 |
| Speed [mph] | 40.00 | | | 40.00 | | | 30.00 | | | 30.00 | | |
| Grade [%] | 0.00 | | | 0.00 | | | 0.00 | | | 0.00 | | |
| Crosswalk | No | | | No | | | Yes | | | Yes | | |

**volumes**

| Name | Cedar Avenue | | | Cedar Avenue | | | | | | I-10 Westbound Ramps | | |
|---|---|---|---|---|---|---|---|---|---|---|---|---|
| Base Volume Input [veh/h] | 370 | 1770 | 0 | 0 | 1025 | 600 | 0 | 0 | 0 | 470 | 6 | 647 |
| Base Volume Adjustment Factor | 1.0000 | 1.0000 | 1.0000 | 1.0000 | 1.0000 | 1.0000 | 1.0000 | 1.0000 | 1.0000 | 1.0000 | 1.0000 | 1.0000 |
| Heavy Vehicles Percentage [%] | 5.00 | 5.00 | 2.00 | 2.00 | 5.00 | 5.00 | 2.00 | 2.00 | 2.00 | 6.00 | 6.00 | 6.00 |
| Growth Rate | 1.00 | 1.00 | 1.00 | 1.00 | 1.00 | 1.00 | 1.00 | 1.00 | 1.00 | 1.00 | 1.00 | 1.00 |
| In-Process Volume [veh/h] | 0 | 0 | 0 | 0 | 0 | 0 | 0 | 0 | 0 | 0 | 0 | 0 |
| Site-Generated Trips [veh/h] | 0 | 0 | 0 | 0 | 0 | 0 | 0 | 0 | 0 | 0 | 0 | 0 |
| Diverted Trips [veh/h] | 0 | 0 | 0 | 0 | 0 | 0 | 0 | 0 | 0 | 0 | 0 | 0 |
| Pass-by Trips [veh/h] | 0 | 0 | 0 | 0 | 0 | 0 | 0 | 0 | 0 | 0 | 0 | 0 |
| Existing Site Adjustment Volume [veh/h] | 0 | 0 | 0 | 0 | 0 | 0 | 0 | 0 | 0 | 0 | 0 | 0 |
| Other Volume [veh/h] | 0 | 0 | 0 | 0 | 0 | 0 | 0 | 0 | 0 | 0 | 0 | 0 |
| Right-Turn on Red Volume [veh/h] | 0 | 0 | 0 | 0 | 0 | 0 | 0 | 0 | 0 | 0 | 0 | 0 |
| Total Hourly Volume [veh/h] | 370 | 1770 | 0 | 0 | 1025 | 600 | 0 | 0 | 0 | 470 | 6 | 647 |
| Peak Hour Factor | 0.9350 | 0.9350 | 1.0000 | 1.0000 | 0.9350 | 0.9350 | 1.0000 | 1.0000 | 1.0000 | 0.9350 | 0.9350 | 0.9350 |
| Other Adjustment Factor | 1.0000 | 1.0000 | 1.0000 | 1.0000 | 1.0000 | 1.0000 | 1.0000 | 1.0000 | 1.0000 | 1.0000 | 1.0000 | 1.0000 |
| Total 15-Minute Volume [veh/h] | 99 | 473 | 0 | 0 | 274 | 160 | 0 | 0 | 0 | 126 | 2 | 173 |
| Total Analysis Volume [veh/h] | 396 | 1893 | 0 | 0 | 1096 | 642 | 0 | 0 | 0 | 503 | 6 | 692 |
| Presence of On-Street Parking | No | | No | No | | No | | | | No | | No |
| On-Street Parking Maneuver Rate [/h] | 0 | 0 | 0 | 0 | 0 | 0 | 0 | 0 | 0 | 0 | 0 | 0 |
| Local Bus Stopping Rate [/h] | 0 | 0 | 0 | 0 | 0 | 0 | 0 | 0 | 0 | 0 | 0 | 0 |
| Pedestrian Volume [ped/h] | 0 | | | 0 | | | 0 | | | 0 | | |
| Bicycle Volume [bicycles/h] | 0 | | | 0 | | | 0 | | | 0 | | |

**Intersection Settings**

| | |
|---|---|
| Located in CBD | No |
| Signal Coordination Group | 2 - NS - Cedar |
| Cycle Length [s] | 120 |
| Coordination Type | Time of Day Pattern Coordinated |
| Actuation Type | Fully actuated |
| Offset [s] | 85.0 |
| Offset Reference | LagFO |
| Permissive Mode | SingleBand |
| Lost time [s] | 12.00 |

**Phasing & Timing**

| Control Type | Protecte | Permiss | Permiss | Permiss | Permiss | Permiss | Permiss | Permiss | Permiss | Permiss | Permiss | Permiss |
|---|---|---|---|---|---|---|---|---|---|---|---|---|
| Signal group | 5 | 2 | 0 | 0 | 6 | 0 | 0 | 0 | 0 | 0 | 4 | 0 |
| Auxiliary Signal Groups | | | | | | | | | | | | |
| Lead / Lag | Lead | - | - | - | - | - | - | - | - | - | - | - |
| Minimum Green [s] | 5 | 5 | 0 | 0 | 5 | 0 | 0 | 0 | 0 | 0 | 5 | 0 |
| Maximum Green [s] | 30 | 30 | 0 | 0 | 30 | 0 | 0 | 0 | 0 | 0 | 30 | 0 |
| Amber [s] | 4.4 | 4.4 | 0.0 | 0.0 | 4.4 | 0.0 | 0.0 | 0.0 | 0.0 | 0.0 | 3.7 | 0.0 |
| All red [s] | 1.0 | 1.0 | 0.0 | 0.0 | 1.0 | 0.0 | 0.0 | 0.0 | 0.0 | 0.0 | 1.0 | 0.0 |
| Split [s] | 28 | 72 | 0 | 0 | 44 | 0 | 0 | 0 | 0 | 0 | 48 | 0 |
| Vehicle Extension [s] | 3.0 | 3.0 | 0.0 | 0.0 | 3.0 | 0.0 | 0.0 | 0.0 | 0.0 | 0.0 | 3.0 | 0.0 |
| Walk [s] | 0 | 7 | 0 | 0 | 7 | 0 | 0 | 0 | 0 | 0 | 7 | 0 |
| Pedestrian Clearance [s] | 0 | 17 | 0 | 0 | 17 | 0 | 0 | 0 | 0 | 0 | 10 | 0 |
| I1, Start-Up Lost Time [s] | 2.0 | 2.0 | 0.0 | 0.0 | 2.0 | 0.0 | 0.0 | 0.0 | 0.0 | 0.0 | 2.0 | 0.0 |
| I2, Clearance Lost Time [s] | 3.4 | 3.4 | 0.0 | 0.0 | 3.4 | 0.0 | 0.0 | 0.0 | 0.0 | 0.0 | 2.7 | 0.0 |
| Minimum Recall | No | No | | | No | | | | | | No | |
| Maximum Recall | No | No | | | No | | | | | | No | |
| Pedestrian Recall | No | No | | | No | | | | | | No | |
| Detector Location [ft] | 0.0 | 0.0 | 0.0 | 0.0 | 0.0 | 0.0 | 0.0 | 0.0 | 0.0 | 0.0 | 0.0 | 0.0 |
| Detector Length [ft] | 0.0 | 0.0 | 0.0 | 0.0 | 0.0 | 0.0 | 0.0 | 0.0 | 0.0 | 0.0 | 0.0 | 0.0 |
| I, Upstream Filtering Factor | 1.00 | 1.00 | 1.00 | 1.00 | 1.00 | 1.00 | 1.00 | 1.00 | 1.00 | 1.00 | 1.00 | 1.00 |

**Exclusive Pedestrian Phase**

| | |
|---|---|
| Pedestrian Signal Group | 0 |
| Pedestrian Walk [s] | 0 |
| Pedestrian Clearance [s] | 0 |

**Lane Group Calculations**

| Lane Group | L | C | C | R | | C | R |
|---|---|---|---|---|---|---|---|
| L, Total Lost Time per Cycle [s] | 5.40 | 5.40 | 5.40 | 5.40 | | 4.70 | 4.70 |
| l1_p, Permitted Start-Up Lost Time [s] | 0.00 | 0.00 | 0.00 | 0.00 | | 0.00 | 0.00 |
| l2, Clearance Lost Time [s] | 3.40 | 3.40 | 3.40 | 3.40 | | 2.70 | 2.70 |
| g_i, Effective Green Time [s] | 23 | 67 | 39 | 39 | | 43 | 43 |
| g / C, Green / Cycle | 0.19 | 0.56 | 0.32 | 0.32 | | 0.36 | 0.36 |
| (v / s)_i Volume / Saturation Flow Rate | 0.23 | 0.55 | 0.22 | 0.42 | | 0.36 | 0.39 |
| s, saturation flow rate [veh/h] | 1723 | 3445 | 4929 | 1538 | | 1677 | 1524 |
| c, Capacity [veh/h] | 325 | 1915 | 1587 | 495 | | 604 | 549 |
| d1, Uniform Delay [s] | 48.66 | 26.27 | 35.44 | 40.66 | | 38.26 | 38.38 |
| k, delay calibration | 0.50 | 0.50 | 0.50 | 0.50 | | 0.45 | 0.50 |
| I, Upstream Filtering Factor | 1.00 | 1.00 | 1.00 | 1.00 | | 1.00 | 1.00 |
| d2, Incremental Delay [s] | 122.79 | 18.06 | 2.48 | 147.58 | | 33.35 | 66.80 |
| d3, Initial Queue Delay [s] | 0.00 | 0.00 | 0.00 | 0.00 | | 0.00 | 0.00 |
| Rp, platoon ratio | 1.00 | 1.00 | 1.00 | 1.00 | | 1.00 | 1.00 |
| PF, progression factor | 1.00 | 1.00 | 1.00 | 1.00 | | 1.00 | 1.00 |

**Lane Group Results**

| | | | | | | | |
|---|---|---|---|---|---|---|---|
| X, volume / capacity | 1.22 | 0.99 | 0.69 | 1.30 | | 0.99 | 1.09 |
| d, Delay for Lane Group [s/veh] | 171.45 | 44.33 | 37.93 | 188.24 | | 71.60 | 105.18 |
| Lane Group LOS | F | D | D | F | | E | F |
| Critical Lane Group | Yes | No | No | Yes | | No | Yes |
| 50th-Percentile Queue Length [veh] | 20.59 | 28.92 | 9.41 | 34.38 | | 22.83 | 25.98 |
| 50th-Percentile Queue Length [ft] | 514.75 | 722.95 | 235.35 | 859.51 | | 570.82 | 649.41 |
| 95th-Percentile Queue Length [veh] | 30.87 | 37.74 | 14.45 | 51.14 | | 30.67 | 36.50 |
| 95th-Percentile Queue Length [ft] | 771.64 | 943.42 | 361.15 | 1278.41 | | 766.73 | 912.42 |

**Movement, Approach, & Intersection Results**

| | | | | | | | | | | | | |
|---|---|---|---|---|---|---|---|---|---|---|---|---|
| d_M, Delay for Movement [s/veh] | 171.45 | 44.33 | 0.00 | 0.00 | 37.93 | 188.24 | 0.00 | 0.00 | 0.00 | 71.60 | 71.60 | 100.74 |
| Movement LOS | F | D | | | D | F | | | | E | E | F |
| d_A, Approach Delay [s/veh] | 66.32 | | | 93.45 | | | 0.00 | | | 88.39 | | |
| Approach LOS | E | | | F | | | A | | | F | | |
| d_I, Intersection Delay [s/veh] | 80.41 | | | | | | | | | | | |
| Intersection LOS | F | | | | | | | | | | | |
| Intersection V/C | 1.157 | | | | | | | | | | | |

## Sequence

| | | | | | | | | | | | | | | | | |
|---|---|---|---|---|---|---|---|---|---|---|---|---|---|---|---|---|
| Ring 1 | - | 2 | 4 | - | - | - | - | - | - | - | - | - | - | - | - | - |
| Ring 2 | 5 | 6 | - | - | - | - | - | - | - | - | - | - | - | - | - | - |
| Ring 3 | - | - | - | - | - | - | - | - | - | - | - | - | - | - | - | - |
| Ring 4 | - | - | - | - | - | - | - | - | - | - | - | - | - | - | - | - |

**Intersection Level Of Service Report**
**Intersection 15: Cedar Ave (NS) / I-10 Eastbound Ramps (EW)**

| | | | |
|---|---|---|---|
| Control Type: | Signalized | Delay (sec / veh): | 61.5 |
| Analysis Method: | HCM 2010 | Level Of Service: | E |
| Analysis Period: | 15 minutes | Volume to Capacity (v/c): | 1.012 |

**Intersection Setup**

| Name | Cedar Avenue | | | Cedar Avenue | | | | | | I-10 Eastbound Ramps | | |
|---|---|---|---|---|---|---|---|---|---|---|---|---|
| Approach | Northbound | | | Southbound | | | Eastbound | | | Westbound | | |
| Lane Configuration | | | | | | | | | | | | |
| Turning Movement | Left | Thru | Right | Left | Thru | Right | Left | Thru | Right | Left | Thru | Right |
| Lane Width [ft] | 12.00 | 12.00 | 12.00 | 12.00 | 12.00 | 12.00 | 12.00 | 12.00 | 12.00 | 12.00 | 12.00 | 12.00 |
| No. of Lanes in Pocket | 0 | 0 | 1 | 1 | 0 | 0 | 1 | 0 | 0 | 0 | 0 | 0 |
| Pocket Length [ft] | 100.00 | 100.00 | 555.00 | 305.00 | 100.00 | 100.00 | 340.00 | 100.00 | 100.00 | 100.00 | 100.00 | 100.00 |
| Speed [mph] | 40.00 | | | 40.00 | | | 30.00 | | | 30.00 | | |
| Grade [%] | 0.00 | | | 0.00 | | | 0.00 | | | 0.00 | | |
| Crosswalk | No | | | No | | | Yes | | | Yes | | |

**volumes**

| Name | Cedar Avenue | | | Cedar Avenue | | | | | | I-10 Eastbound Ramps | | |
|---|---|---|---|---|---|---|---|---|---|---|---|---|
| Base Volume Input [veh/h] | 0 | 1153 | 415 | 305 | 1213 | 0 | 1007 | 3 | 273 | 0 | 0 | 0 |
| Base Volume Adjustment Factor | 1.0000 | 1.0000 | 1.0000 | 1.0000 | 1.0000 | 1.0000 | 1.0000 | 1.0000 | 1.0000 | 1.0000 | 1.0000 | 1.0000 |
| Heavy Vehicles Percentage [%] | 2.00 | 5.00 | 5.00 | 5.00 | 5.00 | 2.00 | 6.00 | 6.00 | 6.00 | 2.00 | 2.00 | 2.00 |
| Growth Rate | 1.00 | 1.00 | 1.00 | 1.00 | 1.00 | 1.00 | 1.00 | 1.00 | 1.00 | 1.00 | 1.00 | 1.00 |
| In-Process Volume [veh/h] | 0 | 0 | 0 | 0 | 0 | 0 | 0 | 0 | 0 | 0 | 0 | 0 |
| Site-Generated Trips [veh/h] | 0 | 0 | 0 | 0 | 0 | 0 | 0 | 0 | 0 | 0 | 0 | 0 |
| Diverted Trips [veh/h] | 0 | 0 | 0 | 0 | 0 | 0 | 0 | 0 | 0 | 0 | 0 | 0 |
| Pass-by Trips [veh/h] | 0 | 0 | 0 | 0 | 0 | 0 | 0 | 0 | 0 | 0 | 0 | 0 |
| Existing Site Adjustment Volume [veh/h] | 0 | 0 | 0 | 0 | 0 | 0 | 0 | 0 | 0 | 0 | 0 | 0 |
| Other Volume [veh/h] | 0 | 0 | 0 | 0 | 0 | 0 | 0 | 0 | 0 | 0 | 0 | 0 |
| Right-Turn on Red Volume [veh/h] | 0 | 0 | 0 | 0 | 0 | 0 | 0 | 0 | 0 | 0 | 0 | 0 |
| Total Hourly Volume [veh/h] | 0 | 1153 | 415 | 305 | 1213 | 0 | 1007 | 3 | 273 | 0 | 0 | 0 |
| Peak Hour Factor | 1.0000 | 0.9240 | 0.9240 | 0.9240 | 0.9240 | 1.0000 | 0.9240 | 0.9240 | 0.9240 | 1.0000 | 1.0000 | 1.0000 |
| Other Adjustment Factor | 1.0000 | 1.0000 | 1.0000 | 1.0000 | 1.0000 | 1.0000 | 1.0000 | 1.0000 | 1.0000 | 1.0000 | 1.0000 | 1.0000 |
| Total 15-Minute Volume [veh/h] | 0 | 312 | 112 | 83 | 328 | 0 | 272 | 1 | 74 | 0 | 0 | 0 |
| Total Analysis Volume [veh/h] | 0 | 1248 | 449 | 330 | 1313 | 0 | 1090 | 3 | 295 | 0 | 0 | 0 |
| Presence of On-Street Parking | No | | No | No | | No | No | | No | | | |
| On-Street Parking Maneuver Rate [/h] | 0 | 0 | 0 | 0 | 0 | 0 | 0 | 0 | 0 | 0 | 0 | 0 |
| Local Bus Stopping Rate [/h] | 0 | 0 | 0 | 0 | 0 | 0 | 0 | 0 | 0 | 0 | 0 | 0 |
| Pedestrian Volume [ped/h] | 0 | | | 0 | | | 0 | | | 0 | | |
| Bicycle Volume [bicycles/h] | 0 | | | 0 | | | 0 | | | 0 | | |

**Intersection Settings**

| | |
|---|---|
| Located in CBD | No |
| Signal Coordination Group | 2 - NS - Cedar |
| Cycle Length [s] | 120 |
| Coordination Type | Time of Day Pattern Coordinated |
| Actuation Type | Fully actuated |
| Offset [s] | 79.0 |
| Offset Reference | LagFO |
| Permissive Mode | SingleBand |
| Lost time [s] | 12.00 |

**Phasing & Timing**

| Control Type | Permiss | Permiss | Permiss | Protecte | Permiss | Permiss | Permiss | Permiss | Permiss | Permiss | Permiss | Permiss |
|---|---|---|---|---|---|---|---|---|---|---|---|---|
| Signal group | 0 | 2 | 0 | 1 | 6 | 0 | 0 | 8 | 0 | 0 | 0 | 0 |
| Auxiliary Signal Groups | | | | | | | | | | | | |
| Lead / Lag | - | - | - | Lead | - | - | - | - | - | - | - | - |
| Minimum Green [s] | 0 | 5 | 0 | 5 | 5 | 0 | 0 | 5 | 0 | 0 | 0 | 0 |
| Maximum Green [s] | 0 | 30 | 0 | 30 | 30 | 0 | 0 | 30 | 0 | 0 | 0 | 0 |
| Amber [s] | 0.0 | 4.4 | 0.0 | 4.4 | 4.4 | 0.0 | 0.0 | 3.7 | 0.0 | 0.0 | 0.0 | 0.0 |
| All red [s] | 0.0 | 1.0 | 0.0 | 1.0 | 1.0 | 0.0 | 0.0 | 1.0 | 0.0 | 0.0 | 0.0 | 0.0 |
| Split [s] | 0 | 37 | 0 | 28 | 65 | 0 | 0 | 55 | 0 | 0 | 0 | 0 |
| Vehicle Extension [s] | 0.0 | 3.0 | 0.0 | 3.0 | 3.0 | 0.0 | 0.0 | 3.0 | 0.0 | 0.0 | 0.0 | 0.0 |
| Walk [s] | 0 | 7 | 0 | 0 | 7 | 0 | 0 | 7 | 0 | 0 | 0 | 0 |
| Pedestrian Clearance [s] | 0 | 21 | 0 | 0 | 16 | 0 | 0 | 10 | 0 | 0 | 0 | 0 |
| I1, Start-Up Lost Time [s] | 0.0 | 2.0 | 0.0 | 2.0 | 2.0 | 0.0 | 0.0 | 2.0 | 0.0 | 0.0 | 0.0 | 0.0 |
| I2, Clearance Lost Time [s] | 0.0 | 3.4 | 0.0 | 3.4 | 3.4 | 0.0 | 0.0 | 2.7 | 0.0 | 0.0 | 0.0 | 0.0 |
| Minimum Recall | | No | | No | No | | | No | | | | |
| Maximum Recall | | No | | No | No | | | No | | | | |
| Pedestrian Recall | | No | | No | No | | | No | | | | |
| Detector Location [ft] | 0.0 | 0.0 | 0.0 | 0.0 | 0.0 | 0.0 | 0.0 | 0.0 | 0.0 | 0.0 | 0.0 | 0.0 |
| Detector Length [ft] | 0.0 | 0.0 | 0.0 | 0.0 | 0.0 | 0.0 | 0.0 | 0.0 | 0.0 | 0.0 | 0.0 | 0.0 |
| I, Upstream Filtering Factor | 1.00 | 1.00 | 1.00 | 1.00 | 1.00 | 1.00 | 1.00 | 1.00 | 1.00 | 1.00 | 1.00 | 1.00 |

**Exclusive Pedestrian Phase**

| | |
|---|---|
| Pedestrian Signal Group | 0 |
| Pedestrian Walk [s] | 0 |
| Pedestrian Clearance [s] | 0 |

**Lane Group Calculations**

| Lane Group | C | R | L | C | L | C | |
|---|---|---|---|---|---|---|---|
| L, Total Lost Time per Cycle [s] | 5.40 | 5.40 | 5.40 | 5.40 | 4.70 | 4.70 | |
| l1_p, Permitted Start-Up Lost Time [s] | 0.00 | 0.00 | 0.00 | 0.00 | 0.00 | 0.00 | |
| l2, Clearance Lost Time [s] | 3.40 | 3.40 | 3.40 | 3.40 | 2.70 | 2.70 | |
| g_i, Effective Green Time [s] | 32 | 32 | 23 | 60 | 50 | 50 | |
| g / C, Green / Cycle | 0.26 | 0.26 | 0.19 | 0.50 | 0.42 | 0.42 | |
| (v / s)_i Volume / Saturation Flow Rate | 0.25 | 0.29 | 0.19 | 0.38 | 0.41 | 0.43 | |
| s, saturation flow rate [veh/h] | 4929 | 1538 | 1723 | 3445 | 1707 | 1624 | |
| c, Capacity [veh/h] | 1302 | 406 | 325 | 1715 | 714 | 679 | |
| d1, Uniform Delay [s] | 43.49 | 44.14 | 48.68 | 24.45 | 34.23 | 34.91 | |
| k, delay calibration | 0.50 | 0.50 | 0.41 | 0.50 | 0.44 | 0.47 | |
| I, Upstream Filtering Factor | 1.00 | 1.00 | 1.00 | 1.00 | 1.00 | 1.00 | |
| d2, Incremental Delay [s] | 16.77 | 76.14 | 49.22 | 3.33 | 25.46 | 39.29 | |
| d3, Initial Queue Delay [s] | 0.00 | 0.00 | 0.00 | 0.00 | 0.00 | 0.00 | |
| Rp, platoon ratio | 1.00 | 1.00 | 1.00 | 1.00 | 1.00 | 1.00 | |
| PF, progression factor | 1.00 | 1.00 | 1.00 | 1.00 | 1.00 | 1.00 | |

**Lane Group Results**

| | | | | | | | |
|---|---|---|---|---|---|---|---|
| X, volume / capacity | 0.96 | 1.10 | 1.02 | 0.77 | 0.97 | 1.02 | |
| d, Delay for Lane Group [s/veh] | 60.26 | 120.27 | 97.90 | 27.78 | 59.69 | 74.19 | |
| Lane Group LOS | E | F | F | C | E | F | |
| Critical Lane Group | No | Yes | Yes | No | No | Yes | |
| 50th-Percentile Queue Length [veh] | 13.83 | 20.30 | 13.93 | 15.03 | 24.33 | 26.66 | |
| 50th-Percentile Queue Length [ft] | 345.80 | 507.57 | 348.32 | 375.70 | 608.37 | 666.48 | |
| 95th-Percentile Queue Length [veh] | 19.93 | 29.36 | 20.22 | 21.39 | 32.43 | 35.71 | |
| 95th-Percentile Queue Length [ft] | 498.29 | 734.12 | 505.60 | 534.64 | 810.63 | 892.67 | |

**Movement, Approach, & Intersection Results**

| | | | | | | | | | | | | |
|---|---|---|---|---|---|---|---|---|---|---|---|---|
| d_M, Delay for Movement [s/veh] | 0.00 | 60.26 | 120.27 | 97.90 | 27.78 | 0.00 | 64.96 | 74.19 | 74.19 | 0.00 | 0.00 | 0.00 |
| Movement LOS | | E | F | F | C | | E | E | E | | | |
| d_A, Approach Delay [s/veh] | 76.14 | | | 41.86 | | | 66.94 | | | 0.00 | | |
| Approach LOS | E | | | D | | | E | | | A | | |
| d_I, Intersection Delay [s/veh] | 61.53 | | | | | | | | | | | |
| Intersection LOS | E | | | | | | | | | | | |
| Intersection V/C | 1.012 | | | | | | | | | | | |

## Sequence

| | | | | | | | | | | | | | | | | |
|---|---|---|---|---|---|---|---|---|---|---|---|---|---|---|---|---|
| Ring 1 | 1 | 2 | - | - | - | - | - | - | - | - | - | - | - | - | - | - |
| Ring 2 | - | 6 | 8 | - | - | - | - | - | - | - | - | - | - | - | - | - |
| Ring 3 | - | - | - | - | - | - | - | - | - | - | - | - | - | - | - | - |
| Ring 4 | - | - | - | - | - | - | - | - | - | - | - | - | - | - | - | - |

**Intersection Level Of Service Report**
**Intersection 16: Cedar Ave (NS) / Slover Ave (EW)**

| | | | |
|---|---|---|---|
| Control Type: | Signalized | Delay (sec / veh): | 155.5 |
| Analysis Method: | HCM 2010 | Level Of Service: | F |
| Analysis Period: | 15 minutes | Volume to Capacity (v/c): | 0.879 |

**Intersection Setup**

| Name | Cedar Avenue | | | Cedar Avenue | | | Slover Avenue | | | Slover Avenue | | |
|---|---|---|---|---|---|---|---|---|---|---|---|---|
| Approach | Northbound | | | Southbound | | | Eastbound | | | Westbound | | |
| Lane Configuration | | | | | | | | | | | | |
| Turning Movement | Left | Thru | Right | Left | Thru | Right | Left | Thru | Right | Left | Thru | Right |
| Lane Width [ft] | 12.00 | 12.00 | 12.00 | 12.00 | 12.00 | 12.00 | 12.00 | 12.00 | 12.00 | 12.00 | 12.00 | 12.00 |
| No. of Lanes in Pocket | 1 | 0 | 0 | 1 | 0 | 0 | 1 | 0 | 0 | 1 | 0 | 0 |
| Pocket Length [ft] | 200.00 | 100.00 | 100.00 | 85.00 | 100.00 | 100.00 | 185.00 | 100.00 | 100.00 | 150.00 | 100.00 | 100.00 |
| Speed [mph] | 45.00 | | | 45.00 | | | 50.00 | | | 50.00 | | |
| Grade [%] | 0.00 | | | 0.00 | | | 0.00 | | | 0.00 | | |
| Crosswalk | Yes | | | Yes | | | Yes | | | Yes | | |

**volumes**

| Name | Cedar Avenue | | | Cedar Avenue | | | Slover Avenue | | | Slover Avenue | | |
|---|---|---|---|---|---|---|---|---|---|---|---|---|
| Base Volume Input [veh/h] | 115 | 781 | 9 | 51 | 773 | 252 | 471 | 189 | 74 | 16 | 179 | 84 |
| Base Volume Adjustment Factor | 1.0000 | 1.0000 | 1.0000 | 1.0000 | 1.0000 | 1.0000 | 1.0000 | 1.0000 | 1.0000 | 1.0000 | 1.0000 | 1.0000 |
| Heavy Vehicles Percentage [%] | 5.00 | 5.00 | 5.00 | 5.00 | 5.00 | 5.00 | 2.00 | 2.00 | 2.00 | 2.00 | 2.00 | 2.00 |
| Growth Rate | 1.00 | 1.00 | 1.00 | 1.00 | 1.00 | 1.00 | 1.00 | 1.00 | 1.00 | 1.00 | 1.00 | 1.00 |
| In-Process Volume [veh/h] | 0 | 0 | 0 | 0 | 0 | 0 | 0 | 0 | 0 | 0 | 0 | 0 |
| Site-Generated Trips [veh/h] | 0 | 0 | 0 | 0 | 0 | 0 | 0 | 0 | 0 | 0 | 0 | 0 |
| Diverted Trips [veh/h] | 0 | 0 | 0 | 0 | 0 | 0 | 0 | 0 | 0 | 0 | 0 | 0 |
| Pass-by Trips [veh/h] | 0 | 0 | 0 | 0 | 0 | 0 | 0 | 0 | 0 | 0 | 0 | 0 |
| Existing Site Adjustment Volume [veh/h] | 0 | 0 | 0 | 0 | 0 | 0 | 0 | 0 | 0 | 0 | 0 | 0 |
| Other Volume [veh/h] | 0 | 0 | 0 | 0 | 0 | 0 | 0 | 0 | 0 | 0 | 0 | 0 |
| Right-Turn on Red Volume [veh/h] | 0 | 0 | 0 | 0 | 0 | 0 | 0 | 0 | 0 | 0 | 0 | 0 |
| Total Hourly Volume [veh/h] | 115 | 781 | 9 | 51 | 773 | 252 | 471 | 189 | 74 | 16 | 179 | 84 |
| Peak Hour Factor | 0.8589 | 0.8890 | 0.8890 | 0.8890 | 0.8890 | 0.8890 | 0.8890 | 0.8890 | 0.8890 | 0.8890 | 0.8890 | 0.8890 |
| Other Adjustment Factor | 1.0000 | 1.0000 | 1.0000 | 1.0000 | 1.0000 | 1.0000 | 1.0000 | 1.0000 | 1.0000 | 1.0000 | 1.0000 | 1.0000 |
| Total 15-Minute Volume [veh/h] | 33 | 220 | 3 | 14 | 217 | 71 | 132 | 53 | 21 | 4 | 50 | 24 |
| Total Analysis Volume [veh/h] | 134 | 879 | 10 | 57 | 870 | 283 | 530 | 213 | 83 | 18 | 201 | 94 |
| Presence of On-Street Parking | No | | No | No | | No | No | | No | No | | No |
| On-Street Parking Maneuver Rate [/h] | 0 | 0 | 0 | 0 | 0 | 0 | 0 | 0 | 0 | 0 | 0 | 0 |
| Local Bus Stopping Rate [/h] | 0 | 0 | 0 | 0 | 0 | 0 | 0 | 0 | 0 | 0 | 0 | 0 |
| Pedestrian Volume [ped/h] | 0 | | | 0 | | | 0 | | | 0 | | |
| Bicycle Volume [bicycles/h] | 0 | | | 0 | | | 0 | | | 0 | | |

**Intersection Settings**

| | |
|---|---|
| Located in CBD | No |
| Signal Coordination Group | 2 - NS - Cedar |
| Cycle Length [s] | 120 |
| Coordination Type | Time of Day Pattern Coordinated |
| Actuation Type | Fully actuated |
| Offset [s] | 31.0 |
| Offset Reference | LagFO |
| Permissive Mode | SingleBand |
| Lost time [s] | 16.00 |

**Phasing & Timing**

| Control Type | Protecte | Permiss | Permiss | Protecte | Permiss | Permiss | Protecte | Permiss | Permiss | Protecte | Permiss | Overlap |
|---|---|---|---|---|---|---|---|---|---|---|---|---|
| Signal group | 5 | 2 | 0 | 1 | 6 | 0 | 3 | 8 | 0 | 7 | 4 | 4 |
| Auxiliary Signal Groups | | | | | | | | | | | | 1,4 |
| Lead / Lag | Lead | - | - | Lead | - | - | Lead | - | - | Lead | - | - |
| Minimum Green [s] | 5 | 5 | 0 | 5 | 5 | 0 | 5 | 5 | 0 | 5 | 5 | 5 |
| Maximum Green [s] | 30 | 30 | 0 | 30 | 30 | 0 | 30 | 30 | 0 | 30 | 30 | 30 |
| Amber [s] | 4.8 | 4.8 | 0.0 | 4.8 | 4.8 | 0.0 | 5.2 | 5.2 | 0.0 | 5.2 | 5.2 | 5.2 |
| All red [s] | 1.0 | 1.0 | 0.0 | 1.0 | 1.0 | 0.0 | 1.0 | 1.0 | 0.0 | 1.0 | 1.0 | 1.0 |
| Split [s] | 11 | 45 | 0 | 11 | 45 | 0 | 19 | 52 | 0 | 12 | 45 | 45 |
| Vehicle Extension [s] | 3.0 | 3.0 | 0.0 | 3.0 | 3.0 | 0.0 | 3.0 | 3.0 | 0.0 | 3.0 | 3.0 | 3.0 |
| Walk [s] | 0 | 7 | 0 | 0 | 7 | 0 | 0 | 7 | 0 | 0 | 7 | 7 |
| Pedestrian Clearance [s] | 0 | 31 | 0 | 0 | 20 | 0 | 0 | 26 | 0 | 0 | 31 | 31 |
| I1, Start-Up Lost Time [s] | 2.0 | 2.0 | 0.0 | 2.0 | 2.0 | 0.0 | 2.0 | 2.0 | 0.0 | 2.0 | 2.0 | 2.0 |
| I2, Clearance Lost Time [s] | 3.8 | 3.8 | 0.0 | 3.8 | 3.8 | 0.0 | 4.2 | 4.2 | 0.0 | 4.2 | 4.2 | 4.2 |
| Minimum Recall | No | No | | No | No | | No | No | | No | No | No |
| Maximum Recall | No | No | | No | No | | No | No | | No | No | No |
| Pedestrian Recall | No | No | | No | No | | No | No | | No | No | No |
| Detector Location [ft] | 0.0 | 0.0 | 0.0 | 0.0 | 0.0 | 0.0 | 0.0 | 0.0 | 0.0 | 0.0 | 0.0 | 0.0 |
| Detector Length [ft] | 0.0 | 0.0 | 0.0 | 0.0 | 0.0 | 0.0 | 0.0 | 0.0 | 0.0 | 0.0 | 0.0 | 0.0 |
| I, Upstream Filtering Factor | 1.00 | 1.00 | 1.00 | 1.00 | 1.00 | 1.00 | 1.00 | 1.00 | 1.00 | 1.00 | 1.00 | 1.00 |

**Exclusive Pedestrian Phase**

| | |
|---|---|
| Pedestrian Signal Group | 0 |
| Pedestrian Walk [s] | 0 |
| Pedestrian Clearance [s] | 0 |

**Lane Group Calculations**

| Lane Group | L | C | C | L | C | C | L | C | L | C | R |
|---|---|---|---|---|---|---|---|---|---|---|---|
| L, Total Lost Time per Cycle [s] | 5.80 | 5.80 | 5.80 | 5.80 | 5.80 | 5.80 | 6.20 | 6.20 | 6.20 | 6.20 | 5.80 |
| l1_p, Permitted Start-Up Lost Time [s] | 0.00 | 0.00 | 0.00 | 0.00 | 0.00 | 0.00 | 0.00 | 0.00 | 0.00 | 0.00 | 0.00 |
| l2, Clearance Lost Time [s] | 0.00 | 3.80 | 3.80 | 0.00 | 3.80 | 3.80 | 4.20 | 4.20 | 4.20 | 4.20 | 0.00 |
| g_i, Effective Green Time [s] | 74 | 63 | 63 | 74 | 63 | 63 | 13 | 26 | 2 | 15 | 27 |
| g / C, Green / Cycle | 0.61 | 0.52 | 0.52 | 0.61 | 0.52 | 0.52 | 0.11 | 0.22 | 0.02 | 0.13 | 0.22 |
| (v / s)_i Volume / Saturation Flow Rate | 0.22 | 0.25 | 0.25 | 0.08 | 0.33 | 0.33 | 0.30 | 0.17 | 0.01 | 0.11 | 0.06 |
| s, saturation flow rate [veh/h] | 622 | 1810 | 1802 | 743 | 1810 | 1660 | 1774 | 1775 | 1774 | 1863 | 1583 |
| c, Capacity [veh/h] | 378 | 943 | 939 | 471 | 946 | 868 | 190 | 382 | 35 | 238 | 354 |
| d1, Uniform Delay [s] | 9.28 | 10.84 | 10.84 | 5.65 | 11.93 | 11.96 | 53.61 | 44.37 | 58.29 | 51.19 | 38.47 |
| k, delay calibration | 0.50 | 0.50 | 0.50 | 0.50 | 0.50 | 0.50 | 0.50 | 0.11 | 0.11 | 0.11 | 0.34 |
| I, Upstream Filtering Factor | 1.00 | 1.00 | 1.00 | 1.00 | 1.00 | 1.00 | 1.00 | 1.00 | 1.00 | 1.00 | 1.00 |
| d2, Incremental Delay [s] | 2.59 | 1.70 | 1.70 | 0.53 | 3.23 | 3.56 | 819.26 | 3.38 | 11.14 | 7.89 | 1.23 |
| d3, Initial Queue Delay [s] | 0.00 | 0.00 | 0.00 | 0.00 | 0.00 | 0.00 | 0.00 | 0.00 | 0.00 | 0.00 | 0.00 |
| Rp, platoon ratio | 1.33 | 1.33 | 1.33 | 1.33 | 1.33 | 1.33 | 1.00 | 1.00 | 1.00 | 1.00 | 1.00 |
| PF, progression factor | 1.00 | 1.00 | 1.00 | 1.00 | 1.00 | 1.00 | 1.00 | 1.00 | 1.00 | 1.00 | 1.00 |

**Lane Group Results**

| | | | | | | | | | | | |
|---|---|---|---|---|---|---|---|---|---|---|---|
| X, volume / capacity | 0.35 | 0.47 | 0.47 | 0.12 | 0.63 | 0.64 | 2.79 | 0.77 | 0.51 | 0.84 | 0.27 |
| d, Delay for Lane Group [s/veh] | 11.86 | 12.54 | 12.54 | 6.18 | 15.16 | 15.53 | 872.88 | 47.75 | 69.43 | 59.08 | 39.70 |
| Lane Group LOS | B | B | B | A | B | B | F | D | E | E | D |
| Critical Lane Group | Yes | No | No | No | No | Yes | Yes | No | No | Yes | No |
| 50th-Percentile Queue Length [veh] | 0.88 | 4.61 | 4.59 | 0.32 | 6.77 | 6.32 | 48.79 | 8.31 | 0.63 | 6.22 | 2.33 |
| 50th-Percentile Queue Length [ft] | 22.03 | 115.16 | 114.75 | 8.06 | 169.27 | 158.10 | 1219.72 | 207.67 | 15.85 | 155.54 | 58.28 |
| 95th-Percentile Queue Length [veh] | 1.59 | 8.13 | 8.10 | 0.58 | 11.04 | 10.45 | 75.57 | 13.03 | 1.14 | 10.31 | 4.20 |
| 95th-Percentile Queue Length [ft] | 39.65 | 203.15 | 202.59 | 14.51 | 275.96 | 261.21 | 1889.13 | 325.83 | 28.54 | 257.81 | 104.91 |

**Movement, Approach, & Intersection Results**

| | | | | | | | | | | | | |
|---|---|---|---|---|---|---|---|---|---|---|---|---|
| d_M, Delay for Movement [s/veh] | 11.86 | 12.54 | 12.54 | 6.18 | 15.28 | 15.53 | 872.88 | 47.75 | 47.75 | 69.43 | 59.08 | 39.70 |
| Movement LOS | B | B | B | A | B | B | F | D | D | E | E | D |
| d_A, Approach Delay [s/veh] | 12.45 | | | 14.91 | | | 577.19 | | | 53.85 | | |
| Approach LOS | B | | | B | | | F | | | D | | |
| d_I, Intersection Delay [s/veh] | 155.51 | | | | | | | | | | | |
| Intersection LOS | F | | | | | | | | | | | |
| Intersection V/C | 0.879 | | | | | | | | | | | |

## Sequence

| | | | | | | | | | | | | | | | | |
|---|---|---|---|---|---|---|---|---|---|---|---|---|---|---|---|---|
| Ring 1 | 1 | 2 | 3 | 4 | - | - | - | - | - | - | - | - | - | - | - | - |
| Ring 2 | 5 | 6 | 7 | 8 | - | - | - | - | - | - | - | - | - | - | - | - |
| Ring 3 | - | - | - | - | - | - | - | - | - | - | - | - | - | - | - | - |
| Ring 4 | - | - | - | - | - | - | - | - | - | - | - | - | - | - | - | - |

# Year 2035 with Project
# Level of Service Calculations

**Intersection Level Of Service Report**
**Intersection 1: Sierra Ave (NS) / San Bernardino Ave (EW)**

| | | | |
|---|---|---|---|
| Control Type: | Signalized | Delay (sec / veh): | 35.6 |
| Analysis Method: | HCM 2010 | Level Of Service: | D |
| Analysis Period: | 15 minutes | Volume to Capacity (v/c): | 0.790 |

**Intersection Setup**

| Name | Sierra Avenue | | | Sierra Avenue | | | San Bernardino Avenue | | | San Bernardino Avenue | | |
|---|---|---|---|---|---|---|---|---|---|---|---|---|
| Approach | Northbound | | | Southbound | | | Eastbound | | | Westbound | | |
| Lane Configuration | | | | | | | | | | | | |
| Turning Movement | Left | Thru | Right | Left | Thru | Right | Left | Thru | Right | Left | Thru | Right |
| Lane Width [ft] | 12.00 | 12.00 | 12.00 | 12.00 | 12.00 | 12.00 | 12.00 | 12.00 | 12.00 | 12.00 | 12.00 | 12.00 |
| No. of Lanes in Pocket | 1 | 0 | 1 | 1 | 0 | 0 | 1 | 0 | 0 | 1 | 0 | 0 |
| Pocket Length [ft] | 140.00 | 100.00 | 140.00 | 150.00 | 100.00 | 100.00 | 150.00 | 100.00 | 100.00 | 240.00 | 100.00 | 100.00 |
| Speed [mph] | 35.00 | | | 35.00 | | | 35.00 | | | 30.00 | | |
| Grade [%] | 0.00 | | | 0.00 | | | 0.00 | | | 0.00 | | |
| Crosswalk | Yes | | | Yes | | | Yes | | | Yes | | |

**volumes**

| Name | Sierra Avenue | | | Sierra Avenue | | | San Bernardino Avenue | | | San Bernardino Avenue | | |
|---|---|---|---|---|---|---|---|---|---|---|---|---|
| Base Volume Input [veh/h] | 75 | 676 | 99 | 49 | 1242 | 79 | 86 | 302 | 112 | 187 | 255 | 27 |
| Base Volume Adjustment Factor | 1.0000 | 1.0000 | 1.0000 | 1.0000 | 1.0000 | 1.0000 | 1.0000 | 1.0000 | 1.0000 | 1.0000 | 1.0000 | 1.0000 |
| Heavy Vehicles Percentage [%] | 2.00 | 2.00 | 2.00 | 2.00 | 2.00 | 2.00 | 2.00 | 2.00 | 2.00 | 2.00 | 2.00 | 2.00 |
| Growth Rate | 1.00 | 1.00 | 1.00 | 1.00 | 1.00 | 1.00 | 1.00 | 1.00 | 1.00 | 1.00 | 1.00 | 1.00 |
| In-Process Volume [veh/h] | 0 | 0 | 0 | 0 | 0 | 0 | 0 | 0 | 0 | 0 | 0 | 0 |
| Site-Generated Trips [veh/h] | 0 | 0 | 0 | 0 | 0 | 0 | 0 | 0 | 0 | 0 | 0 | 0 |
| Diverted Trips [veh/h] | 0 | 0 | 0 | 0 | 0 | 0 | 0 | 0 | 0 | 0 | 0 | 0 |
| Pass-by Trips [veh/h] | 0 | 0 | 0 | 0 | 0 | 0 | 0 | 0 | 0 | 0 | 0 | 0 |
| Existing Site Adjustment Volume [veh/h] | 0 | 0 | 0 | 0 | 0 | 0 | 0 | 0 | 0 | 0 | 0 | 0 |
| Other Volume [veh/h] | 0 | 0 | 0 | 0 | 0 | 0 | 0 | 0 | 0 | 0 | 0 | 0 |
| Right-Turn on Red Volume [veh/h] | 0 | 0 | 0 | 0 | 0 | 0 | 0 | 0 | 0 | 0 | 0 | 0 |
| Total Hourly Volume [veh/h] | 75 | 676 | 99 | 49 | 1242 | 79 | 86 | 302 | 112 | 187 | 255 | 27 |
| Peak Hour Factor | 0.9020 | 0.9020 | 0.9020 | 0.9020 | 0.9200 | 0.9020 | 0.9020 | 0.9020 | 0.9020 | 0.9020 | 0.9020 | 0.9020 |
| Other Adjustment Factor | 1.0000 | 1.0000 | 1.0000 | 1.0000 | 1.0000 | 1.0000 | 1.0000 | 1.0000 | 1.0000 | 1.0000 | 1.0000 | 1.0000 |
| Total 15-Minute Volume [veh/h] | 21 | 187 | 27 | 14 | 338 | 22 | 24 | 84 | 31 | 52 | 71 | 7 |
| Total Analysis Volume [veh/h] | 83 | 749 | 110 | 54 | 1350 | 88 | 95 | 335 | 124 | 207 | 283 | 30 |
| Presence of On-Street Parking | No | | No | No | | No | No | | No | No | | No |
| On-Street Parking Maneuver Rate [/h] | 0 | 0 | 0 | 0 | 0 | 0 | 0 | 0 | 0 | 0 | 0 | 0 |
| Local Bus Stopping Rate [/h] | 0 | 0 | 0 | 0 | 0 | 0 | 0 | 0 | 0 | 0 | 0 | 0 |
| Pedestrian Volume [ped/h] | 0 | | | 0 | | | 0 | | | 0 | | |
| Bicycle Volume [bicycles/h] | 0 | | | 0 | | | 0 | | | 0 | | |

**Intersection Settings**

| | |
|---|---|
| Located in CBD | No |
| Signal Coordination Group | 1 - NS - Sierra |
| Cycle Length [s] | 120 |
| Coordination Type | Time of Day Pattern Coordinated |
| Actuation Type | Fully actuated |
| Offset [s] | 0.0 |
| Offset Reference | LagFO |
| Permissive Mode | SingleBand |
| Lost time [s] | 16.00 |

**Phasing & Timing**

| Control Type | Protecte | Permiss | Permiss | Protecte | Permiss | Permiss | Protecte | Permiss | Permiss | Protecte | Permiss | Permiss |
|---|---|---|---|---|---|---|---|---|---|---|---|---|
| Signal group | 5 | 2 | 0 | 1 | 6 | 0 | 3 | 8 | 0 | 7 | 4 | 0 |
| Auxiliary Signal Groups | | | | | | | | | | | | |
| Lead / Lag | Lead | - | - | Lead | - | - | Lead | - | - | Lead | - | - |
| Minimum Green [s] | 5 | 5 | 0 | 5 | 5 | 0 | 5 | 5 | 0 | 5 | 5 | 0 |
| Maximum Green [s] | 30 | 30 | 0 | 30 | 30 | 0 | 30 | 30 | 0 | 30 | 30 | 0 |
| Amber [s] | 4.1 | 4.1 | 0.0 | 4.1 | 4.1 | 0.0 | 4.1 | 4.1 | 0.0 | 3.7 | 3.7 | 0.0 |
| All red [s] | 1.0 | 1.0 | 0.0 | 1.0 | 1.0 | 0.0 | 1.0 | 1.0 | 0.0 | 1.0 | 1.0 | 0.0 |
| Split [s] | 11 | 51 | 0 | 11 | 51 | 0 | 17 | 41 | 0 | 17 | 41 | 0 |
| Vehicle Extension [s] | 3.0 | 3.0 | 0.0 | 3.0 | 3.0 | 0.0 | 3.0 | 3.0 | 0.0 | 3.0 | 3.0 | 0.0 |
| Walk [s] | 0 | 7 | 0 | 0 | 7 | 0 | 0 | 7 | 0 | 0 | 7 | 0 |
| Pedestrian Clearance [s] | 0 | 22 | 0 | 0 | 23 | 0 | 0 | 28 | 0 | 0 | 25 | 0 |
| l1, Start-Up Lost Time [s] | 2.0 | 2.0 | 0.0 | 2.0 | 2.0 | 0.0 | 2.0 | 2.0 | 0.0 | 2.0 | 2.0 | 0.0 |
| l2, Clearance Lost Time [s] | 3.1 | 3.1 | 0.0 | 3.1 | 3.1 | 0.0 | 3.1 | 3.1 | 0.0 | 2.7 | 2.7 | 0.0 |
| Minimum Recall | No | No | | No | No | | No | No | | No | No | |
| Maximum Recall | No | No | | No | No | | No | No | | No | No | |
| Pedestrian Recall | No | No | | No | No | | No | No | | No | No | |
| Detector Location [ft] | 0.0 | 0.0 | 0.0 | 0.0 | 0.0 | 0.0 | 0.0 | 0.0 | 0.0 | 0.0 | 0.0 | 0.0 |
| Detector Length [ft] | 0.0 | 0.0 | 0.0 | 0.0 | 0.0 | 0.0 | 0.0 | 0.0 | 0.0 | 0.0 | 0.0 | 0.0 |
| I, Upstream Filtering Factor | 1.00 | 1.00 | 1.00 | 1.00 | 1.00 | 1.00 | 1.00 | 1.00 | 1.00 | 1.00 | 1.00 | 1.00 |

**Exclusive Pedestrian Phase**

| | |
|---|---|
| Pedestrian Signal Group | 0 |
| Pedestrian Walk [s] | 0 |
| Pedestrian Clearance [s] | 0 |

**Lane Group Calculations**

| Lane Group | L | C | R | L | C | C | L | C | C | L | C | C |
|---|---|---|---|---|---|---|---|---|---|---|---|---|
| L, Total Lost Time per Cycle [s] | 5.10 | 5.10 | 5.10 | 5.10 | 5.10 | 5.10 | 5.10 | 5.10 | 5.10 | 4.70 | 4.70 | 4.70 |
| l1_p, Permitted Start-Up Lost Time [s] | 0.00 | 0.00 | 0.00 | 0.00 | 0.00 | 0.00 | 0.00 | 0.00 | 0.00 | 0.00 | 0.00 | 0.00 |
| l2, Clearance Lost Time [s] | 3.10 | 3.10 | 3.10 | 3.10 | 3.10 | 3.10 | 3.10 | 3.10 | 3.10 | 2.70 | 2.70 | 2.70 |
| g_i, Effective Green Time [s] | 6 | 65 | 65 | 5 | 63 | 63 | 8 | 18 | 18 | 12 | 23 | 23 |
| g / C, Green / Cycle | 0.05 | 0.54 | 0.54 | 0.04 | 0.53 | 0.53 | 0.07 | 0.15 | 0.15 | 0.10 | 0.19 | 0.19 |
| (v / s)_i Volume / Saturation Flow Rate | 0.05 | 0.21 | 0.07 | 0.03 | 0.39 | 0.39 | 0.05 | 0.13 | 0.13 | 0.12 | 0.09 | 0.09 |
| s, saturation flow rate [veh/h] | 1774 | 3547 | 1583 | 1774 | 1863 | 1823 | 1774 | 1863 | 1695 | 1774 | 1863 | 1801 |
| c, Capacity [veh/h] | 89 | 1909 | 852 | 71 | 984 | 963 | 120 | 284 | 258 | 183 | 350 | 338 |
| d1, Uniform Delay [s] | 55.86 | 9.23 | 8.19 | 56.30 | 12.63 | 12.68 | 55.15 | 49.47 | 49.59 | 53.85 | 43.29 | 43.32 |
| k, delay calibration | 0.21 | 0.50 | 0.50 | 0.11 | 0.50 | 0.50 | 0.11 | 0.11 | 0.11 | 0.45 | 0.11 | 0.11 |
| I, Upstream Filtering Factor | 1.00 | 1.00 | 1.00 | 1.00 | 1.00 | 1.00 | 1.00 | 1.00 | 1.00 | 1.00 | 1.00 | 1.00 |
| d2, Incremental Delay [s] | 46.88 | 0.61 | 0.31 | 15.60 | 4.91 | 5.12 | 11.06 | 6.58 | 7.88 | 103.31 | 0.92 | 0.96 |
| d3, Initial Queue Delay [s] | 0.00 | 0.00 | 0.00 | 0.00 | 0.00 | 0.00 | 0.00 | 0.00 | 0.00 | 0.00 | 0.00 | 0.00 |
| Rp, platoon ratio | 1.33 | 1.33 | 1.33 | 1.33 | 1.33 | 1.33 | 1.00 | 1.00 | 1.00 | 1.00 | 1.00 | 1.00 |
| PF, progression factor | 1.00 | 1.00 | 1.00 | 1.00 | 1.00 | 1.00 | 1.00 | 1.00 | 1.00 | 1.00 | 1.00 | 1.00 |

**Lane Group Results**

| | | | | | | | | | | | | |
|---|---|---|---|---|---|---|---|---|---|---|---|---|
| X, volume / capacity | 0.94 | 0.39 | 0.13 | 0.76 | 0.74 | 0.74 | 0.79 | 0.84 | 0.85 | 1.13 | 0.45 | 0.46 |
| d, Delay for Lane Group [s/veh] | 102.74 | 9.84 | 8.51 | 71.90 | 17.54 | 17.81 | 66.22 | 56.05 | 57.46 | 157.16 | 44.21 | 44.28 |
| Lane Group LOS | F | A | A | E | B | B | E | E | E | F | D | D |
| Critical Lane Group | Yes | No | No | No | No | Yes | No | No | Yes | Yes | No | No |
| 50th-Percentile Queue Length [veh] | 3.60 | 3.38 | 0.93 | 1.89 | 9.90 | 9.85 | 3.18 | 7.40 | 6.95 | 10.75 | 4.28 | 4.18 |
| 50th-Percentile Queue Length [ft] | 89.91 | 84.44 | 23.34 | 47.35 | 247.39 | 246.21 | 79.45 | 184.94 | 173.63 | 268.79 | 107.10 | 104.45 |
| 95th-Percentile Queue Length [veh] | 6.47 | 6.08 | 1.68 | 3.41 | 15.05 | 15.00 | 5.72 | 11.86 | 11.27 | 16.93 | 7.68 | 7.52 |
| 95th-Percentile Queue Length [ft] | 161.85 | 151.99 | 42.01 | 85.23 | 376.37 | 374.88 | 143.02 | 296.46 | 281.68 | 423.22 | 191.96 | 188.02 |

**Movement, Approach, & Intersection Results**

| | | | | | | | | | | | | |
|---|---|---|---|---|---|---|---|---|---|---|---|---|
| d_M, Delay for Movement [s/veh] | 102.74 | 9.84 | 8.51 | 71.90 | 17.66 | 17.81 | 66.22 | 56.46 | 57.46 | 157.16 | 44.24 | 44.28 |
| Movement LOS | F | A | A | E | B | B | E | E | E | F | D | D |
| d_A, Approach Delay [s/veh] | 17.87 | | | 19.63 | | | 58.36 | | | 89.19 | | |
| Approach LOS | B | | | B | | | E | | | F | | |
| d_I, Intersection Delay [s/veh] | 35.59 | | | | | | | | | | | |
| Intersection LOS | D | | | | | | | | | | | |
| Intersection V/C | 0.790 | | | | | | | | | | | |

## Sequence

| | | | | | | | | | | | | | | | | |
|---|---|---|---|---|---|---|---|---|---|---|---|---|---|---|---|---|
| Ring 1 | 1 | 2 | 3 | 4 | - | - | - | - | - | - | - | - | - | - | - | - |
| Ring 2 | 5 | 6 | 7 | 8 | - | - | - | - | - | - | - | - | - | - | - | - |
| Ring 3 | - | - | - | - | - | - | - | - | - | - | - | - | - | - | - | - |
| Ring 4 | - | - | - | - | - | - | - | - | - | - | - | - | - | - | - | - |

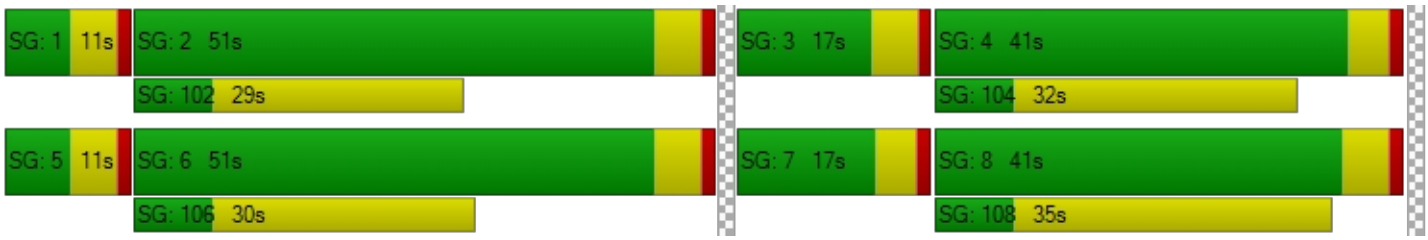

**Intersection Level Of Service Report**
**Intersection 2: Sierra Ave (NS) / Valley Blvd (EW)**

| | | | |
|---|---|---|---|
| Control Type: | Signalized | Delay (sec / veh): | 27.4 |
| Analysis Method: | HCM 2010 | Level Of Service: | C |
| Analysis Period: | 15 minutes | Volume to Capacity (v/c): | 0.842 |

**Intersection Setup**

| Name | Sierra Avenue | | | Sierra Avenue | | | Valley Boulevard | | | Valley Boulevard | | |
|---|---|---|---|---|---|---|---|---|---|---|---|---|
| Approach | Northbound | | | Southbound | | | Eastbound | | | Westbound | | |
| Lane Configuration | | | | | | | | | | | | |
| Turning Movement | Left | Thru | Right | Left | Thru | Right | Left | Thru | Right | Left | Thru | Right |
| Lane Width [ft] | 12.00 | 12.00 | 12.00 | 12.00 | 12.00 | 12.00 | 12.00 | 12.00 | 12.00 | 12.00 | 12.00 | 12.00 |
| No. of Lanes in Pocket | 2 | 0 | 0 | 2 | 0 | 0 | 2 | 0 | 0 | 2 | 0 | 0 |
| Pocket Length [ft] | 370.00 | 100.00 | 100.00 | 165.00 | 100.00 | 100.00 | 260.00 | 100.00 | 100.00 | 355.00 | 100.00 | 100.00 |
| Speed [mph] | 35.00 | | | 35.00 | | | 40.00 | | | 40.00 | | |
| Grade [%] | 0.00 | | | 0.00 | | | 0.00 | | | 0.00 | | |
| Crosswalk | Yes | | | Yes | | | Yes | | | Yes | | |

**volumes**

| Name | Sierra Avenue | | | Sierra Avenue | | | Valley Boulevard | | | Valley Boulevard | | |
|---|---|---|---|---|---|---|---|---|---|---|---|---|
| Base Volume Input [veh/h] | 210 | 1156 | 854 | 70 | 1616 | 124 | 111 | 234 | 304 | 494 | 326 | 90 |
| Base Volume Adjustment Factor | 1.0000 | 1.0000 | 1.0000 | 1.0000 | 1.0000 | 1.0000 | 1.0000 | 1.0000 | 1.0000 | 1.0000 | 1.0000 | 1.0000 |
| Heavy Vehicles Percentage [%] | 2.00 | 2.00 | 2.00 | 2.00 | 2.00 | 2.00 | 4.00 | 4.00 | 4.00 | 4.00 | 4.00 | 4.00 |
| Growth Rate | 1.00 | 1.00 | 1.00 | 1.00 | 1.00 | 1.00 | 1.00 | 1.00 | 1.00 | 1.00 | 1.00 | 1.00 |
| In-Process Volume [veh/h] | 0 | 0 | 0 | 0 | 0 | 0 | 0 | 0 | 0 | 0 | 0 | 0 |
| Site-Generated Trips [veh/h] | 0 | 0 | 0 | 0 | 0 | 0 | 0 | 0 | 0 | 0 | 0 | 0 |
| Diverted Trips [veh/h] | 0 | 0 | 0 | 0 | 0 | 0 | 0 | 0 | 0 | 0 | 0 | 0 |
| Pass-by Trips [veh/h] | 0 | 0 | 0 | 0 | 0 | 0 | 0 | 0 | 0 | 0 | 0 | 0 |
| Existing Site Adjustment Volume [veh/h] | 0 | 0 | 0 | 0 | 0 | 0 | 0 | 0 | 0 | 0 | 0 | 0 |
| Other Volume [veh/h] | 0 | 0 | 0 | 0 | 0 | 0 | 0 | 0 | 0 | 0 | 0 | 0 |
| Right-Turn on Red Volume [veh/h] | 0 | 0 | 0 | 0 | 0 | 0 | 0 | 0 | 0 | 0 | 0 | 0 |
| Total Hourly Volume [veh/h] | 210 | 1156 | 854 | 70 | 1616 | 124 | 111 | 234 | 304 | 494 | 326 | 90 |
| Peak Hour Factor | 0.9720 | 0.9720 | 0.9720 | 0.9720 | 0.9720 | 0.9720 | 0.9720 | 0.9720 | 0.9720 | 0.9720 | 0.9720 | 0.9720 |
| Other Adjustment Factor | 1.0000 | 1.0000 | 1.0000 | 1.0000 | 1.0000 | 1.0000 | 1.0000 | 1.0000 | 1.0000 | 1.0000 | 1.0000 | 1.0000 |
| Total 15-Minute Volume [veh/h] | 54 | 297 | 220 | 18 | 416 | 32 | 29 | 60 | 78 | 127 | 84 | 23 |
| Total Analysis Volume [veh/h] | 216 | 1189 | 879 | 72 | 1663 | 128 | 114 | 241 | 313 | 508 | 335 | 93 |
| Presence of On-Street Parking | No | | No | No | | No | No | | No | No | | No |
| On-Street Parking Maneuver Rate [/h] | 0 | 0 | 0 | 0 | 0 | 0 | 0 | 0 | 0 | 0 | 0 | 0 |
| Local Bus Stopping Rate [/h] | 0 | 0 | 0 | 0 | 0 | 0 | 0 | 0 | 0 | 0 | 0 | 0 |
| Pedestrian Volume [ped/h] | 0 | | | 0 | | | 0 | | | 0 | | |
| Bicycle Volume [bicycles/h] | 0 | | | 0 | | | 0 | | | 0 | | |

**Intersection Settings**

| | |
|---|---|
| Located in CBD | No |
| Signal Coordination Group | 1 - NS - Sierra |
| Cycle Length [s] | 120 |
| Coordination Type | Time of Day Pattern Coordinated |
| Actuation Type | Fully actuated |
| Offset [s] | 62.0 |
| Offset Reference | LagFO |
| Permissive Mode | SingleBand |
| Lost time [s] | 16.00 |

**Phasing & Timing**

| Control Type | Protecte | Permiss | Overlap | Protecte | Permiss | Permiss | Protecte | Permiss | Overlap | Protecte | Permiss | Overlap |
|---|---|---|---|---|---|---|---|---|---|---|---|---|
| Signal group | 5 | 2 | 2 | 1 | 6 | 0 | 3 | 8 | 8 | 7 | 4 | 4 |
| Auxiliary Signal Groups | | | 2,7 | | | | | | 5,8 | | | 1,4 |
| Lead / Lag | Lead | - | - | Lead | - | - | Lead | - | - | Lead | - | - |
| Minimum Green [s] | 5 | 5 | 5 | 5 | 5 | 0 | 5 | 5 | 5 | 5 | 5 | 5 |
| Maximum Green [s] | 30 | 30 | 30 | 30 | 30 | 0 | 30 | 30 | 30 | 30 | 30 | 30 |
| Amber [s] | 4.1 | 4.1 | 4.1 | 4.1 | 4.1 | 0.0 | 4.4 | 4.4 | 4.4 | 4.4 | 4.4 | 4.4 |
| All red [s] | 1.0 | 1.0 | 1.0 | 1.0 | 1.0 | 0.0 | 1.0 | 1.0 | 1.0 | 1.0 | 1.0 | 1.0 |
| Split [s] | 14 | 62 | 62 | 11 | 59 | 0 | 13 | 21 | 21 | 26 | 34 | 34 |
| Vehicle Extension [s] | 3.0 | 3.0 | 3.0 | 3.0 | 3.0 | 0.0 | 3.0 | 3.0 | 3.0 | 3.0 | 3.0 | 3.0 |
| Walk [s] | 0 | 7 | 7 | 0 | 7 | 0 | 0 | 5 | 5 | 0 | 5 | 5 |
| Pedestrian Clearance [s] | 0 | 24 | 24 | 0 | 26 | 0 | 0 | 10 | 10 | 0 | 10 | 10 |
| I1, Start-Up Lost Time [s] | 2.0 | 2.0 | 2.0 | 2.0 | 2.0 | 0.0 | 2.0 | 2.0 | 2.0 | 2.0 | 2.0 | 2.0 |
| I2, Clearance Lost Time [s] | 3.1 | 3.1 | 3.1 | 3.1 | 3.1 | 0.0 | 3.4 | 3.4 | 3.4 | 3.4 | 3.4 | 3.4 |
| Minimum Recall | No | No | No | No | No | | No | No | No | No | No | No |
| Maximum Recall | No | No | No | No | No | | No | No | No | No | No | No |
| Pedestrian Recall | No | No | No | No | No | | No | No | No | No | No | No |
| Detector Location [ft] | 0.0 | 0.0 | 0.0 | 0.0 | 0.0 | 0.0 | 0.0 | 0.0 | 0.0 | 0.0 | 0.0 | 0.0 |
| Detector Length [ft] | 0.0 | 0.0 | 0.0 | 0.0 | 0.0 | 0.0 | 0.0 | 0.0 | 0.0 | 0.0 | 0.0 | 0.0 |
| I, Upstream Filtering Factor | 1.00 | 1.00 | 1.00 | 1.00 | 1.00 | 1.00 | 1.00 | 1.00 | 1.00 | 1.00 | 1.00 | 1.00 |

**Exclusive Pedestrian Phase**

| | |
|---|---|
| Pedestrian Signal Group | 0 |
| Pedestrian Walk [s] | 0 |
| Pedestrian Clearance [s] | 0 |

**Lane Group Calculations**

| Lane Group | L | C | R | L | C | C | L | C | R | L | C | R |
|---|---|---|---|---|---|---|---|---|---|---|---|---|
| L, Total Lost Time per Cycle [s] | 5.10 | 5.10 | 5.40 | 5.10 | 5.10 | 5.10 | 5.40 | 5.40 | 5.10 | 5.40 | 5.40 | 5.10 |
| l1_p, Permitted Start-Up Lost Time [s] | 0.00 | 0.00 | 0.00 | 0.00 | 0.00 | 0.00 | 0.00 | 0.00 | 0.00 | 0.00 | 0.00 | 0.00 |
| l2, Clearance Lost Time [s] | 3.10 | 3.10 | 0.00 | 3.10 | 3.10 | 3.10 | 3.40 | 3.40 | 0.00 | 3.40 | 3.40 | 0.00 |
| g_i, Effective Green Time [s] | 9 | 61 | 87 | 6 | 58 | 58 | 6 | 11 | 26 | 20 | 26 | 37 |
| g / C, Green / Cycle | 0.07 | 0.51 | 0.72 | 0.05 | 0.49 | 0.49 | 0.05 | 0.10 | 0.22 | 0.17 | 0.21 | 0.31 |
| (v / s)_i Volume / Saturation Flow Rate | 0.06 | 0.34 | 0.56 | 0.02 | 0.33 | 0.34 | 0.03 | 0.07 | 0.20 | 0.15 | 0.10 | 0.06 |
| s, saturation flow rate [veh/h] | 3445 | 3547 | 1583 | 3445 | 3547 | 1795 | 3379 | 3478 | 1553 | 3379 | 3478 | 1553 |
| c, Capacity [veh/h] | 260 | 1810 | 1143 | 175 | 1722 | 872 | 170 | 332 | 335 | 570 | 744 | 481 |
| d1, Uniform Delay [s] | 53.29 | 13.12 | 0.82 | 54.31 | 15.42 | 15.44 | 55.08 | 50.93 | 41.97 | 45.48 | 37.15 | 25.71 |
| k, delay calibration | 0.11 | 0.50 | 0.50 | 0.11 | 0.50 | 0.50 | 0.11 | 0.11 | 0.50 | 0.11 | 0.11 | 0.34 |
| I, Upstream Filtering Factor | 1.00 | 1.00 | 1.00 | 1.00 | 1.00 | 1.00 | 1.00 | 1.00 | 1.00 | 1.00 | 1.00 | 1.00 |
| d2, Incremental Delay [s] | 6.76 | 1.88 | 5.01 | 1.56 | 2.29 | 4.49 | 4.53 | 3.04 | 34.96 | 5.03 | 0.43 | 0.62 |
| d3, Initial Queue Delay [s] | 0.00 | 0.00 | 0.00 | 0.00 | 0.00 | 0.00 | 0.00 | 0.00 | 0.00 | 0.00 | 0.00 | 0.00 |
| Rp, platoon ratio | 1.33 | 1.33 | 1.33 | 1.33 | 1.33 | 1.33 | 1.33 | 1.33 | 1.33 | 1.33 | 1.33 | 1.33 |
| PF, progression factor | 1.00 | 1.00 | 1.00 | 1.00 | 1.00 | 1.00 | 1.00 | 1.00 | 1.00 | 1.00 | 1.00 | 1.00 |

**Lane Group Results**

| | | | | | | | | | | | | |
|---|---|---|---|---|---|---|---|---|---|---|---|---|
| X, volume / capacity | 0.83 | 0.66 | 0.77 | 0.41 | 0.69 | 0.69 | 0.67 | 0.73 | 0.93 | 0.89 | 0.45 | 0.19 |
| d, Delay for Lane Group [s/veh] | 60.05 | 15.00 | 5.83 | 55.86 | 17.70 | 19.92 | 59.62 | 53.97 | 76.93 | 50.52 | 37.58 | 26.33 |
| Lane Group LOS | E | B | A | E | B | B | E | D | E | D | D | C |
| Critical Lane Group | No | No | Yes | Yes | No | No | No | No | Yes | Yes | No | No |
| 50th-Percentile Queue Length [veh] | 3.35 | 7.43 | 2.37 | 1.07 | 8.68 | 9.36 | 1.75 | 3.48 | 11.33 | 7.20 | 3.86 | 1.72 |
| 50th-Percentile Queue Length [ft] | 83.75 | 185.72 | 59.32 | 26.74 | 216.99 | 234.05 | 43.75 | 87.07 | 283.33 | 180.06 | 96.50 | 43.12 |
| 95th-Percentile Queue Length [veh] | 6.03 | 11.90 | 4.27 | 1.93 | 13.51 | 14.38 | 3.15 | 6.27 | 16.85 | 11.60 | 6.95 | 3.10 |
| 95th-Percentile Queue Length [ft] | 150.74 | 297.47 | 106.77 | 48.14 | 337.78 | 359.51 | 78.75 | 156.72 | 421.36 | 290.09 | 173.71 | 77.61 |

**Movement, Approach, & Intersection Results**

| | | | | | | | | | | | | |
|---|---|---|---|---|---|---|---|---|---|---|---|---|
| d_M, Delay for Movement [s/veh] | 60.05 | 15.00 | 5.83 | 55.86 | 18.34 | 19.92 | 59.62 | 53.97 | 76.93 | 50.52 | 37.58 | 26.33 |
| Movement LOS | E | B | A | E | B | B | E | D | E | D | D | C |
| d_A, Approach Delay [s/veh] | 15.73 | | | 19.90 | | | 65.69 | | | 43.48 | | |
| Approach LOS | B | | | B | | | E | | | D | | |
| d_I, Intersection Delay [s/veh] | 27.40 | | | | | | | | | | | |
| Intersection LOS | C | | | | | | | | | | | |
| Intersection V/C | 0.842 | | | | | | | | | | | |

## Sequence

| | | | | | | | | | | | | | | | | |
|---|---|---|---|---|---|---|---|---|---|---|---|---|---|---|---|---|
| Ring 1 | 1 | 2 | 3 | 4 | - | - | - | - | - | - | - | - | - | - | - | - |
| Ring 2 | 5 | 6 | 7 | 8 | - | - | - | - | - | - | - | - | - | - | - | - |
| Ring 3 | - | - | - | - | - | - | - | - | - | - | - | - | - | - | - | - |
| Ring 4 | - | - | - | - | - | - | - | - | - | - | - | - | - | - | - | - |

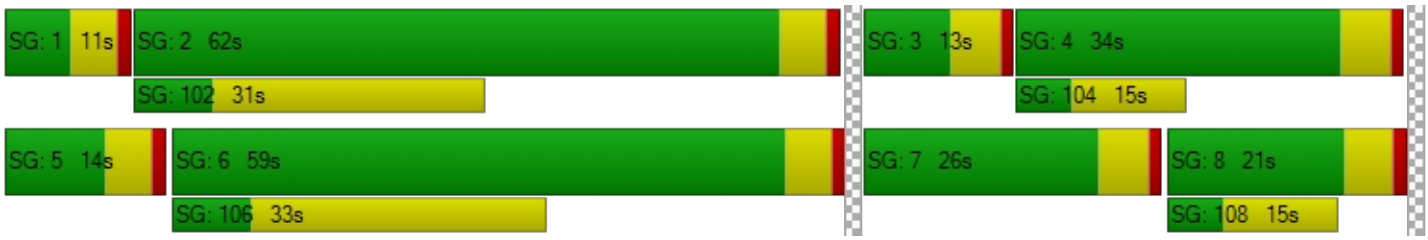

**Intersection Level Of Service Report**
**Intersection 3: Sierra Ave (NS) / I-10 Ramps (EW)**

| | | | |
|---|---|---|---|
| Control Type: | Signalized | Delay (sec / veh): | 37.7 |
| Analysis Method: | HCM 2010 | Level Of Service: | D |
| Analysis Period: | 15 minutes | Volume to Capacity (v/c): | 0.863 |

**Intersection Setup**

| Name | Sierra Avenue | | | Sierra Avenue | | | I-10 Ramps | | | | | |
|---|---|---|---|---|---|---|---|---|---|---|---|---|
| Approach | Northbound | | | Southbound | | | Eastbound | | | Westbound | | |
| Lane Configuration | | | | | | | | | | | | |
| Turning Movement | Left | Thru | Right | Left | Thru | Right | Left | Thru | Right | Left | Thru | Right |
| Lane Width [ft] | 12.00 | 12.00 | 12.00 | 12.00 | 12.00 | 12.00 | 12.00 | 12.00 | 12.00 | 12.00 | 12.00 | 12.00 |
| No. of Lanes in Pocket | 2 | 0 | 0 | 2 | 0 | 0 | 1 | 0 | 0 | 0 | 0 | 1 |
| Pocket Length [ft] | 540.00 | 100.00 | 100.00 | 295.00 | 100.00 | 100.00 | 430.00 | 100.00 | 100.00 | 100.00 | 100.00 | 520.00 |
| Speed [mph] | 40.00 | | | 35.00 | | | 30.00 | | | 30.00 | | |
| Grade [%] | 0.00 | | | 0.00 | | | 0.00 | | | 0.00 | | |
| Crosswalk | No | | | No | | | Yes | | | Yes | | |

**volumes**

| Name | Sierra Avenue | | | Sierra Avenue | | | I-10 Ramps | | | | | |
|---|---|---|---|---|---|---|---|---|---|---|---|---|
| Base Volume Input [veh/h] | 247 | 614 | 500 | 762 | 821 | 806 | 943 | 0 | 387 | 582 | 0 | 608 |
| Base Volume Adjustment Factor | 1.0000 | 1.0000 | 1.0000 | 1.0000 | 1.0000 | 1.0000 | 1.0000 | 1.0000 | 1.0000 | 1.0000 | 1.0000 | 1.0000 |
| Heavy Vehicles Percentage [%] | 2.00 | 2.00 | 2.00 | 2.00 | 2.00 | 2.00 | 2.00 | 2.00 | 2.00 | 2.00 | 2.00 | 2.00 |
| Growth Rate | 1.00 | 1.00 | 1.00 | 1.00 | 1.00 | 1.00 | 1.00 | 1.00 | 1.00 | 1.00 | 1.00 | 1.00 |
| In-Process Volume [veh/h] | 0 | 0 | 0 | 0 | 0 | 0 | 0 | 0 | 0 | 0 | 0 | 0 |
| Site-Generated Trips [veh/h] | 0 | 0 | 0 | 0 | 0 | 0 | 0 | 0 | 0 | 0 | 0 | 0 |
| Diverted Trips [veh/h] | 0 | 0 | 0 | 0 | 0 | 0 | 0 | 0 | 0 | 0 | 0 | 0 |
| Pass-by Trips [veh/h] | 0 | 0 | 0 | 0 | 0 | 0 | 0 | 0 | 0 | 0 | 0 | 0 |
| Existing Site Adjustment Volume [veh/h] | 0 | 0 | 0 | 0 | 0 | 0 | 0 | 0 | 0 | 0 | 0 | 0 |
| Other Volume [veh/h] | 0 | 0 | 0 | 0 | 0 | 0 | 0 | 0 | 0 | 0 | 0 | 0 |
| Right-Turn on Red Volume [veh/h] | 0 | 0 | 0 | 0 | 0 | 0 | 0 | 0 | 0 | 0 | 0 | 0 |
| Total Hourly Volume [veh/h] | 247 | 614 | 500 | 762 | 821 | 806 | 943 | 0 | 387 | 582 | 0 | 608 |
| Peak Hour Factor | 0.9830 | 0.9830 | 0.9830 | 0.9830 | 0.9830 | 0.9830 | 0.9830 | 1.0000 | 0.9830 | 0.9830 | 1.0000 | 0.9830 |
| Other Adjustment Factor | 1.0000 | 1.0000 | 1.0000 | 1.0000 | 1.0000 | 1.0000 | 1.0000 | 1.0000 | 1.0000 | 1.0000 | 1.0000 | 1.0000 |
| Total 15-Minute Volume [veh/h] | 63 | 156 | 127 | 194 | 209 | 205 | 240 | 0 | 98 | 148 | 0 | 155 |
| Total Analysis Volume [veh/h] | 251 | 625 | 509 | 775 | 835 | 820 | 959 | 0 | 394 | 592 | 0 | 619 |
| Presence of On-Street Parking | No | | No | No | | No | No | | No | No | | No |
| On-Street Parking Maneuver Rate [/h] | 0 | 0 | 0 | 0 | 0 | 0 | 0 | 0 | 0 | 0 | 0 | 0 |
| Local Bus Stopping Rate [/h] | 0 | 0 | 0 | 0 | 0 | 0 | 0 | 0 | 0 | 0 | 0 | 0 |
| Pedestrian Volume [ped/h] | 0 | | | 0 | | | 0 | | | 0 | | |
| Bicycle Volume [bicycles/h] | 0 | | | 0 | | | 0 | | | 0 | | |

**Intersection Settings**

| | |
|---|---|
| Located in CBD | No |
| Signal Coordination Group | 1 - NS - Sierra |
| Cycle Length [s] | 120 |
| Coordination Type | Time of Day Pattern Coordinated |
| Actuation Type | Fully actuated |
| Offset [s] | 83.0 |
| Offset Reference | LagFO |
| Permissive Mode | SingleBand |
| Lost time [s] | 12.00 |

**Phasing & Timing**

| Control Type | Permiss | Permiss | Overlap | Permiss | Permiss | Overlap | Permiss | Permiss | Overlap | Permiss | Permiss | Overlap |
|---|---|---|---|---|---|---|---|---|---|---|---|---|
| Signal group | 2 | 2 | 2 | 6 | 6 | 6 | 3 | 0 | 3 | 7 | 0 | 7 |
| Auxiliary Signal Groups | | | 2,3,6,7 | | | 2,3,6,7 | | | 2,3,6 | | | 2,6,7 |
| Lead / Lag | Lag | - | - | Lag | - | - | Lead | - | - | Lead | - | - |
| Minimum Green [s] | 5 | 5 | 5 | 5 | 5 | 5 | 5 | 0 | 5 | 5 | 0 | 5 |
| Maximum Green [s] | 30 | 30 | 30 | 30 | 30 | 30 | 30 | 0 | 30 | 30 | 0 | 30 |
| Amber [s] | 4.4 | 4.4 | 4.4 | 4.1 | 4.1 | 4.1 | 3.7 | 0.0 | 3.7 | 3.7 | 0.0 | 3.7 |
| All red [s] | 3.0 | 3.0 | 3.0 | 3.0 | 3.0 | 3.0 | 3.0 | 0.0 | 3.0 | 3.0 | 0.0 | 3.0 |
| Split [s] | 30 | 30 | 30 | 42 | 42 | 42 | 48 | 0 | 48 | 48 | 0 | 48 |
| Vehicle Extension [s] | 3.0 | 3.0 | 3.0 | 3.0 | 3.0 | 3.0 | 3.0 | 0.0 | 3.0 | 3.0 | 0.0 | 3.0 |
| Walk [s] | 7 | 7 | 7 | 7 | 7 | 7 | 7 | 0 | 7 | 7 | 0 | 7 |
| Pedestrian Clearance [s] | 15 | 15 | 15 | 15 | 15 | 15 | 15 | 0 | 15 | 15 | 0 | 15 |
| I1, Start-Up Lost Time [s] | 2.0 | 2.0 | 2.0 | 2.0 | 2.0 | 2.0 | 2.0 | 0.0 | 2.0 | 2.0 | 0.0 | 2.0 |
| I2, Clearance Lost Time [s] | 5.4 | 5.4 | 5.4 | 5.1 | 5.1 | 5.1 | 4.7 | 0.0 | 4.7 | 4.7 | 0.0 | 4.7 |
| Minimum Recall | | No | No | | No | No | No | | No | No | | No |
| Maximum Recall | | No | No | | No | No | No | | No | No | | No |
| Pedestrian Recall | | No | No | | No | No | No | | No | No | | No |
| Detector Location [ft] | 0.0 | 0.0 | 0.0 | 0.0 | 0.0 | 0.0 | 0.0 | 0.0 | 0.0 | 0.0 | 0.0 | 0.0 |
| Detector Length [ft] | 0.0 | 0.0 | 0.0 | 0.0 | 0.0 | 0.0 | 0.0 | 0.0 | 0.0 | 0.0 | 0.0 | 0.0 |
| I, Upstream Filtering Factor | 1.00 | 1.00 | 1.00 | 1.00 | 1.00 | 1.00 | 1.00 | 1.00 | 1.00 | 1.00 | 1.00 | 1.00 |

**Exclusive Pedestrian Phase**

| | |
|---|---|
| Pedestrian Signal Group | 0 |
| Pedestrian Walk [s] | 0 |
| Pedestrian Clearance [s] | 0 |

**Lane Group Calculations**

| Lane Group | L | C | R | L | C | R | L | R | L | R |
|---|---|---|---|---|---|---|---|---|---|---|
| L, Total Lost Time per Cycle [s] | 7.40 | 7.40 | 7.10 | 7.10 | 7.10 | 7.10 | 6.70 | 7.10 | 6.70 | 7.10 |
| l1_p, Permitted Start-Up Lost Time [s] | 2.00 | 0.00 | 0.00 | 2.00 | 0.00 | 0.00 | 2.00 | 0.00 | 2.00 | 0.00 |
| l2, Clearance Lost Time [s] | 5.40 | 5.40 | 0.00 | 5.10 | 5.10 | 0.00 | 4.70 | 5.40 | 4.70 | 0.00 |
| g_i, Effective Green Time [s] | 29 | 29 | 147 | 29 | 29 | 147 | 41 | 141 | 41 | 105 |
| g / C, Green / Cycle | 0.24 | 0.24 | 1.22 | 0.24 | 0.24 | 1.22 | 0.34 | 1.18 | 0.34 | 0.88 |
| (v / s)_i Volume / Saturation Flow Rate | 0.09 | 0.12 | 0.32 | 0.28 | 0.16 | 0.52 | 0.35 | 0.25 | 0.22 | 0.39 |
| s, saturation flow rate [veh/h] | 2741 | 5074 | 1583 | 2741 | 5074 | 1583 | 2741 | 1583 | 2741 | 1583 |
| c, Capacity [veh/h] | 669 | 1211 | 1936 | 677 | 1224 | 1936 | 949 | 1867 | 949 | 1392 |
| d1, Uniform Delay [s] | 35.61 | 35.23 | 0.00 | 42.84 | 36.69 | 0.00 | 41.74 | 0.00 | 34.91 | 0.72 |
| k, delay calibration | 0.50 | 0.50 | 0.50 | 0.50 | 0.50 | 0.50 | 0.11 | 0.50 | 0.11 | 0.50 |
| I, Upstream Filtering Factor | 1.00 | 1.00 | 1.00 | 1.00 | 1.00 | 1.00 | 1.00 | 1.00 | 1.00 | 1.00 |
| d2, Incremental Delay [s] | 1.61 | 1.57 | 0.33 | 81.71 | 3.09 | 0.68 | 16.12 | 0.26 | 0.68 | 1.03 |
| d3, Initial Queue Delay [s] | 0.00 | 0.00 | 0.00 | 0.00 | 0.00 | 0.00 | 0.00 | 0.00 | 0.00 | 0.00 |
| Rp, platoon ratio | 1.33 | 1.33 | 1.01 | 1.33 | 1.33 | 1.01 | 1.00 | 1.00 | 1.00 | 1.00 |
| PF, progression factor | 1.00 | 1.00 | 1.00 | 1.00 | 1.00 | 1.00 | 1.00 | 1.00 | 1.00 | 1.00 |

**Lane Group Results**

| | | | | | | | | | | |
|---|---|---|---|---|---|---|---|---|---|---|
| X, volume / capacity | 0.38 | 0.52 | 0.26 | 1.14 | 0.68 | 0.42 | 1.01 | 0.21 | 0.62 | 0.44 |
| d, Delay for Lane Group [s/veh] | 37.22 | 36.81 | 0.33 | 124.55 | 39.79 | 0.68 | 57.87 | 0.26 | 35.58 | 1.75 |
| Lane Group LOS | D | D | A | F | D | A | F | A | D | A |
| Critical Lane Group | No | No | No | Yes | No | No | Yes | Yes | No | No |
| 50th-Percentile Queue Length [veh] | 2.92 | 4.80 | 0.18 | 17.37 | 6.94 | 0.37 | 16.37 | 0.13 | 7.49 | 0.40 |
| 50th-Percentile Queue Length [ft] | 72.89 | 119.96 | 4.46 | 434.25 | 173.40 | 9.16 | 409.26 | 3.34 | 187.37 | 9.97 |
| 95th-Percentile Queue Length [veh] | 5.25 | 8.39 | 0.32 | 26.05 | 11.25 | 0.66 | 23.16 | 0.24 | 11.98 | 0.72 |
| 95th-Percentile Queue Length [ft] | 131.20 | 209.77 | 8.02 | 651.13 | 281.37 | 16.49 | 579.06 | 6.01 | 299.62 | 17.95 |

**Movement, Approach, & Intersection Results**

| | | | | | | | | | | | | |
|---|---|---|---|---|---|---|---|---|---|---|---|---|
| d_M, Delay for Movement [s/veh] | 37.22 | 36.81 | 0.33 | 124.55 | 39.79 | 0.68 | 57.87 | 0.00 | 0.26 | 35.58 | 0.00 | 1.75 |
| Movement LOS | D | D | A | F | D | A | F | | A | D | | A |
| d_A, Approach Delay [s/veh] | 23.48 | | | 53.62 | | | 41.09 | | | 18.29 | | |
| Approach LOS | C | | | D | | | D | | | B | | |
| d_I, Intersection Delay [s/veh] | 37.71 | | | | | | | | | | | |
| Intersection LOS | D | | | | | | | | | | | |
| Intersection V/C | 0.863 | | | | | | | | | | | |

## Sequence

| | | | | | | | | | | | | | | | | |
|---|---|---|---|---|---|---|---|---|---|---|---|---|---|---|---|---|
| Ring 1 | 2 | 6 | 3 | - | - | - | - | - | - | - | - | - | - | - | - | - |
| Ring 2 | - | - | 7 | - | - | - | - | - | - | - | - | - | - | - | - | - |
| Ring 3 | - | - | - | - | - | - | - | - | - | - | - | - | - | - | - | - |
| Ring 4 | - | - | - | - | - | - | - | - | - | - | - | - | - | - | - | - |

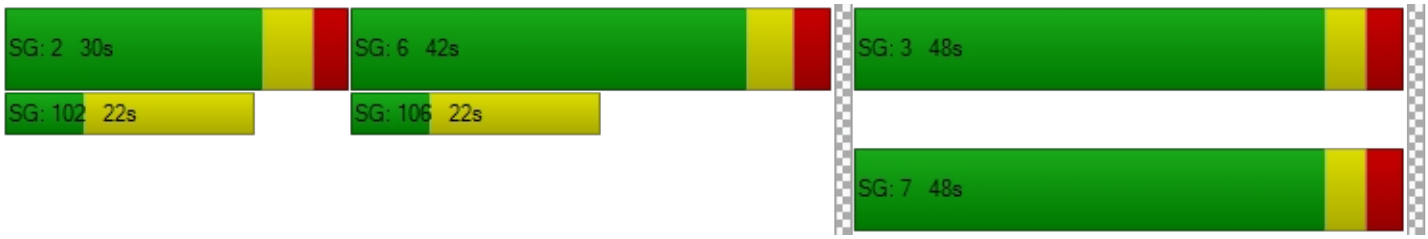

**Intersection Level Of Service Report**
**Intersection 4: Sierra Ave (NS) / Slover Ave (EW)**

| | | | |
|---|---|---|---|
| Control Type: | Signalized | Delay (sec / veh): | 30.6 |
| Analysis Method: | HCM 2010 | Level Of Service: | C |
| Analysis Period: | 15 minutes | Volume to Capacity (v/c): | 0.569 |

**Intersection Setup**

| Name | Sierra Avenue | | | Sierra Avenue | | | Slover Avenue | | | Slover Avenue | | |
|---|---|---|---|---|---|---|---|---|---|---|---|---|
| Approach | Northbound | | | Southbound | | | Eastbound | | | Westbound | | |
| Lane Configuration | | | | | | | | | | | | |
| Turning Movement | Left | Thru | Right | Left | Thru | Right | Left | Thru | Right | Left | Thru | Right |
| Lane Width [ft] | 12.00 | 12.00 | 12.00 | 12.00 | 12.00 | 12.00 | 12.00 | 12.00 | 12.00 | 12.00 | 12.00 | 12.00 |
| No. of Lanes in Pocket | 2 | 0 | 0 | 2 | 0 | 0 | 2 | 0 | 1 | 2 | 0 | 1 |
| Pocket Length [ft] | 195.00 | 100.00 | 100.00 | 615.00 | 100.00 | 100.00 | 290.00 | 100.00 | 290.00 | 230.00 | 100.00 | 300.00 |
| Speed [mph] | 50.00 | | | 40.00 | | | 45.00 | | | 45.00 | | |
| Grade [%] | 0.00 | | | 0.00 | | | 0.00 | | | 0.00 | | |
| Crosswalk | Yes | | | Yes | | | Yes | | | Yes | | |

**volumes**

| Name | Sierra Avenue | | | Sierra Avenue | | | Slover Avenue | | | Slover Avenue | | |
|---|---|---|---|---|---|---|---|---|---|---|---|---|
| Base Volume Input [veh/h] | 160 | 899 | 150 | 464 | 946 | 281 | 283 | 285 | 112 | 111 | 279 | 270 |
| Base Volume Adjustment Factor | 1.0000 | 1.0000 | 1.0000 | 1.0000 | 1.0000 | 1.0000 | 1.0000 | 1.0000 | 1.0000 | 1.0000 | 1.0000 | 1.0000 |
| Heavy Vehicles Percentage [%] | 2.00 | 2.00 | 2.00 | 2.00 | 2.00 | 2.00 | 2.00 | 2.00 | 2.00 | 2.00 | 2.00 | 2.00 |
| Growth Rate | 1.00 | 1.00 | 1.00 | 1.00 | 1.00 | 1.00 | 1.00 | 1.00 | 1.00 | 1.00 | 1.00 | 1.00 |
| In-Process Volume [veh/h] | 0 | 0 | 0 | 0 | 0 | 0 | 0 | 0 | 0 | 0 | 0 | 0 |
| Site-Generated Trips [veh/h] | 0 | 0 | 0 | 0 | 0 | 0 | 0 | 0 | 0 | 0 | 0 | 0 |
| Diverted Trips [veh/h] | 0 | 0 | 0 | 0 | 0 | 0 | 0 | 0 | 0 | 0 | 0 | 0 |
| Pass-by Trips [veh/h] | 0 | 0 | 0 | 0 | 0 | 0 | 0 | 0 | 0 | 0 | 0 | 0 |
| Existing Site Adjustment Volume [veh/h] | 0 | 0 | 0 | 0 | 0 | 0 | 0 | 0 | 0 | 0 | 0 | 0 |
| Other Volume [veh/h] | 0 | 0 | 0 | 0 | 0 | 0 | 0 | 0 | 0 | 0 | 0 | 0 |
| Right-Turn on Red Volume [veh/h] | 0 | 0 | 0 | 0 | 0 | 0 | 0 | 0 | 0 | 0 | 0 | 0 |
| Total Hourly Volume [veh/h] | 160 | 899 | 150 | 464 | 946 | 281 | 283 | 285 | 112 | 111 | 279 | 270 |
| Peak Hour Factor | 0.9580 | 0.9580 | 0.9580 | 0.9580 | 0.9580 | 0.9580 | 0.9580 | 0.9580 | 0.9580 | 0.9580 | 0.9580 | 0.9580 |
| Other Adjustment Factor | 1.0000 | 1.0000 | 1.0000 | 1.0000 | 1.0000 | 1.0000 | 1.0000 | 1.0000 | 1.0000 | 1.0000 | 1.0000 | 1.0000 |
| Total 15-Minute Volume [veh/h] | 42 | 235 | 39 | 121 | 247 | 73 | 74 | 74 | 29 | 29 | 73 | 70 |
| Total Analysis Volume [veh/h] | 167 | 938 | 157 | 484 | 987 | 293 | 295 | 297 | 117 | 116 | 291 | 282 |
| Presence of On-Street Parking | No | | No | No | | No | No | | No | No | | No |
| On-Street Parking Maneuver Rate [/h] | 0 | 0 | 0 | 0 | 0 | 0 | 0 | 0 | 0 | 0 | 0 | 0 |
| Local Bus Stopping Rate [/h] | 0 | 0 | 0 | 0 | 0 | 0 | 0 | 0 | 0 | 0 | 0 | 0 |
| Pedestrian Volume [ped/h] | 0 | | | 0 | | | 0 | | | 0 | | |
| Bicycle Volume [bicycles/h] | 0 | | | 0 | | | 0 | | | 0 | | |

**Intersection Settings**

| | |
|---|---|
| Located in CBD | No |
| Signal Coordination Group | 1 - NS - Sierra |
| Cycle Length [s] | 120 |
| Coordination Type | Time of Day Pattern Coordinated |
| Actuation Type | Fully actuated |
| Offset [s] | 15.0 |
| Offset Reference | LagFO |
| Permissive Mode | SingleBand |
| Lost time [s] | 16.00 |

**Phasing & Timing**

| Control Type | Protecte | Permiss | Permiss | Protecte | Permiss | Permiss | Protecte | Permiss | Permiss | Protecte | Permiss | Overlap |
|---|---|---|---|---|---|---|---|---|---|---|---|---|
| Signal group | 5 | 2 | 0 | 1 | 6 | 0 | 3 | 8 | 0 | 7 | 4 | 4 |
| Auxiliary Signal Groups | | | | | | | | | | | | 1,4 |
| Lead / Lag | Lead | - | - | Lead | - | - | Lead | - | - | Lead | - | - |
| Minimum Green [s] | 5 | 5 | 0 | 5 | 5 | 0 | 5 | 5 | 0 | 5 | 5 | 5 |
| Maximum Green [s] | 30 | 30 | 0 | 30 | 30 | 0 | 30 | 30 | 0 | 30 | 30 | 30 |
| Amber [s] | 5.2 | 5.2 | 0.0 | 4.4 | 4.4 | 0.0 | 4.8 | 4.8 | 0.0 | 4.8 | 4.8 | 4.8 |
| All red [s] | 1.0 | 1.0 | 0.0 | 1.0 | 1.0 | 0.0 | 1.0 | 1.0 | 0.0 | 1.0 | 1.0 | 1.0 |
| Split [s] | 15 | 47 | 0 | 31 | 63 | 0 | 21 | 29 | 0 | 13 | 21 | 21 |
| Vehicle Extension [s] | 3.0 | 3.0 | 0.0 | 3.0 | 3.0 | 0.0 | 3.0 | 3.0 | 0.0 | 3.0 | 3.0 | 3.0 |
| Walk [s] | 0 | 7 | 0 | 0 | 7 | 0 | 0 | 5 | 0 | 0 | 5 | 5 |
| Pedestrian Clearance [s] | 0 | 22 | 0 | 0 | 20 | 0 | 0 | 10 | 0 | 0 | 10 | 10 |
| I1, Start-Up Lost Time [s] | 2.0 | 2.0 | 0.0 | 2.0 | 2.0 | 0.0 | 2.0 | 2.0 | 0.0 | 2.0 | 2.0 | 2.0 |
| I2, Clearance Lost Time [s] | 4.2 | 4.2 | 0.0 | 3.4 | 3.4 | 0.0 | 3.8 | 3.8 | 0.0 | 3.8 | 3.8 | 3.8 |
| Minimum Recall | No | No | | No | No | | No | No | | No | No | No |
| Maximum Recall | No | No | | No | No | | No | No | | No | No | No |
| Pedestrian Recall | No | No | | No | No | | No | No | | No | No | No |
| Detector Location [ft] | 0.0 | 0.0 | 0.0 | 0.0 | 0.0 | 0.0 | 0.0 | 0.0 | 0.0 | 0.0 | 0.0 | 0.0 |
| Detector Length [ft] | 0.0 | 0.0 | 0.0 | 0.0 | 0.0 | 0.0 | 0.0 | 0.0 | 0.0 | 0.0 | 0.0 | 0.0 |
| I, Upstream Filtering Factor | 1.00 | 1.00 | 1.00 | 1.00 | 1.00 | 1.00 | 1.00 | 1.00 | 1.00 | 1.00 | 1.00 | 1.00 |

**Exclusive Pedestrian Phase**

| | |
|---|---|
| Pedestrian Signal Group | 0 |
| Pedestrian Walk [s] | 0 |
| Pedestrian Clearance [s] | 0 |

**Lane Group Calculations**

| Lane Group | L | C | R | L | C | C | L | C | R | L | C | R |
|---|---|---|---|---|---|---|---|---|---|---|---|---|
| L, Total Lost Time per Cycle [s] | 6.20 | 6.20 | 6.20 | 5.40 | 5.40 | 5.40 | 5.80 | 5.80 | 5.80 | 5.80 | 5.80 | 5.40 |
| l1_p, Permitted Start-Up Lost Time [s] | 0.00 | 0.00 | 0.00 | 0.00 | 0.00 | 0.00 | 0.00 | 0.00 | 0.00 | 0.00 | 0.00 | 0.00 |
| l2, Clearance Lost Time [s] | 4.20 | 4.20 | 4.20 | 3.40 | 3.40 | 3.40 | 3.80 | 3.80 | 3.80 | 3.80 | 3.80 | 0.00 |
| g_i, Effective Green Time [s] | 8 | 52 | 52 | 20 | 64 | 64 | 12 | 19 | 19 | 6 | 12 | 38 |
| g / C, Green / Cycle | 0.06 | 0.44 | 0.44 | 0.16 | 0.53 | 0.53 | 0.10 | 0.16 | 0.16 | 0.05 | 0.10 | 0.32 |
| (v / s)_i Volume / Saturation Flow Rate | 0.05 | 0.18 | 0.10 | 0.14 | 0.25 | 0.25 | 0.09 | 0.08 | 0.07 | 0.03 | 0.08 | 0.10 |
| s, saturation flow rate [veh/h] | 3445 | 5074 | 1583 | 3445 | 3547 | 1653 | 3445 | 3547 | 1583 | 3445 | 3547 | 2803 |
| c, Capacity [veh/h] | 225 | 2204 | 688 | 568 | 1893 | 883 | 358 | 557 | 249 | 174 | 368 | 888 |
| d1, Uniform Delay [s] | 53.85 | 16.91 | 15.51 | 45.48 | 9.90 | 9.91 | 52.76 | 46.59 | 46.09 | 56.06 | 52.59 | 31.19 |
| k, delay calibration | 0.11 | 0.50 | 0.50 | 0.11 | 0.50 | 0.50 | 0.11 | 0.11 | 0.11 | 0.11 | 0.11 | 0.11 |
| I, Upstream Filtering Factor | 1.00 | 1.00 | 1.00 | 1.00 | 1.00 | 1.00 | 1.00 | 1.00 | 1.00 | 1.00 | 1.00 | 1.00 |
| d2, Incremental Delay [s] | 4.74 | 0.60 | 0.77 | 3.74 | 0.81 | 1.74 | 4.77 | 0.79 | 1.38 | 4.35 | 3.86 | 0.20 |
| d3, Initial Queue Delay [s] | 0.00 | 0.00 | 0.00 | 0.00 | 0.00 | 0.00 | 0.00 | 0.00 | 0.00 | 0.00 | 0.00 | 0.00 |
| Rp, platoon ratio | 1.33 | 1.33 | 1.33 | 1.33 | 1.33 | 1.33 | 1.00 | 1.00 | 1.00 | 1.00 | 1.00 | 1.00 |
| PF, progression factor | 1.00 | 1.00 | 1.00 | 1.00 | 1.00 | 1.00 | 1.00 | 1.00 | 1.00 | 1.00 | 1.00 | 1.00 |

**Lane Group Results**

| | | | | | | | | | | | | |
|---|---|---|---|---|---|---|---|---|---|---|---|---|
| X, volume / capacity | 0.74 | 0.43 | 0.23 | 0.85 | 0.46 | 0.46 | 0.82 | 0.53 | 0.47 | 0.67 | 0.79 | 0.32 |
| d, Delay for Lane Group [s/veh] | 58.59 | 17.51 | 16.29 | 49.21 | 10.70 | 11.65 | 57.53 | 47.38 | 47.47 | 60.41 | 56.45 | 31.39 |
| Lane Group LOS | E | B | B | D | B | B | E | D | D | E | E | C |
| Critical Lane Group | No | Yes | No | Yes | No | No | Yes | No | No | No | No | Yes |
| 50th-Percentile Queue Length [veh] | 2.49 | 4.18 | 2.04 | 6.72 | 4.07 | 4.05 | 4.49 | 4.04 | 3.20 | 1.79 | 4.37 | 3.04 |
| 50th-Percentile Queue Length [ft] | 62.37 | 104.44 | 51.09 | 168.10 | 101.78 | 101.15 | 112.17 | 100.97 | 79.90 | 44.84 | 109.27 | 76.01 |
| 95th-Percentile Queue Length [veh] | 4.49 | 7.52 | 3.68 | 10.98 | 7.33 | 7.28 | 7.96 | 7.27 | 5.75 | 3.23 | 7.80 | 5.47 |
| 95th-Percentile Queue Length [ft] | 112.27 | 187.99 | 91.95 | 274.42 | 183.20 | 182.06 | 199.02 | 181.75 | 143.81 | 80.71 | 194.99 | 136.83 |

**Movement, Approach, & Intersection Results**

| | | | | | | | | | | | | |
|---|---|---|---|---|---|---|---|---|---|---|---|---|
| d_M, Delay for Movement [s/veh] | 58.59 | 17.51 | 16.29 | 49.21 | 10.82 | 11.65 | 57.53 | 47.38 | 47.47 | 60.41 | 56.45 | 31.39 |
| Movement LOS | E | B | B | D | B | B | E | D | D | E | E | C |
| d_A, Approach Delay [s/veh] | 22.80 | | | 21.49 | | | 51.62 | | | 46.86 | | |
| Approach LOS | C | | | C | | | D | | | D | | |
| d_I, Intersection Delay [s/veh] | 30.64 | | | | | | | | | | | |
| Intersection LOS | C | | | | | | | | | | | |
| Intersection V/C | 0.569 | | | | | | | | | | | |

## Sequence

| | | | | | | | | | | | | | | | | |
|---|---|---|---|---|---|---|---|---|---|---|---|---|---|---|---|---|
| Ring 1 | 1 | 2 | 3 | 4 | - | - | - | - | - | - | - | - | - | - | - | - |
| Ring 2 | 5 | 6 | 7 | 8 | - | - | - | - | - | - | - | - | - | - | - | - |
| Ring 3 | - | - | - | - | - | - | - | - | - | - | - | - | - | - | - | - |
| Ring 4 | - | - | - | - | - | - | - | - | - | - | - | - | - | - | - | - |

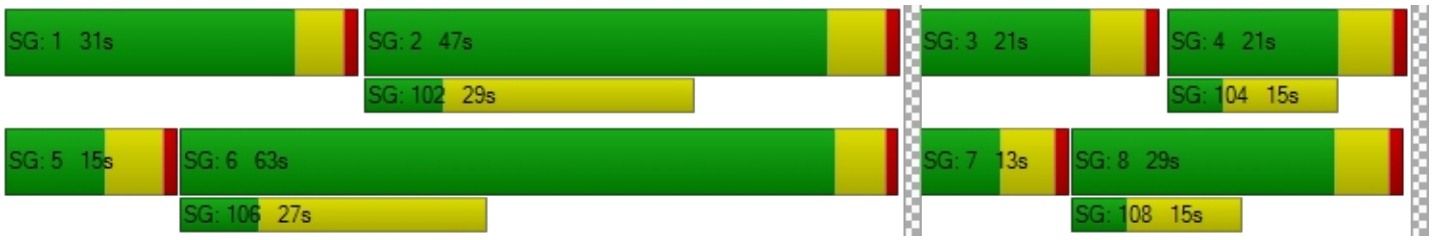

**Intersection Level Of Service Report**
**Intersection 5: Palmetto Ave (NS) / Valley Blvd (EW)**

| | | | |
|---|---|---|---|
| Control Type: | Signalized | Delay (sec / veh): | 23.6 |
| Analysis Method: | HCM 2010 | Level Of Service: | C |
| Analysis Period: | 15 minutes | Volume to Capacity (v/c): | 0.458 |

**Intersection Setup**

| Name | Palmetto Avenue | | Valley Boulevard | | Valley Boulevard | |
|---|---|---|---|---|---|---|
| Approach | Southbound | | Eastbound | | Westbound | |
| Lane Configuration | | | | | | |
| Turning Movement | Left | Right | Left | Thru | Thru | Right |
| Lane Width [ft] | 12.00 | 12.00 | 12.00 | 12.00 | 12.00 | 12.00 |
| No. of Lanes in Pocket | 0 | 0 | 1 | 0 | 0 | 0 |
| Pocket Length [ft] | 100.00 | 100.00 | 150.00 | 100.00 | 100.00 | 100.00 |
| Speed [mph] | 35.00 | | 40.00 | | 40.00 | |
| Grade [%] | 0.00 | | 0.00 | | 0.00 | |
| Crosswalk | Yes | | Yes | | No | |

**volumes**

| Name | Palmetto Avenue | | Valley Boulevard | | Valley Boulevard | |
|---|---|---|---|---|---|---|
| Base Volume Input [veh/h] | 70 | 250 | 130 | 300 | 480 | 80 |
| Base Volume Adjustment Factor | 1.0000 | 1.0000 | 1.0000 | 1.0000 | 1.0000 | 1.0000 |
| Heavy Vehicles Percentage [%] | 2.00 | 2.00 | 4.00 | 4.00 | 4.00 | 4.00 |
| Growth Rate | 1.00 | 1.00 | 1.00 | 1.00 | 1.00 | 1.00 |
| In-Process Volume [veh/h] | 0 | 0 | 0 | 0 | 0 | 0 |
| Site-Generated Trips [veh/h] | 0 | 0 | 0 | 0 | 0 | 0 |
| Diverted Trips [veh/h] | 0 | 0 | 0 | 0 | 0 | 0 |
| Pass-by Trips [veh/h] | 0 | 0 | 0 | 0 | 0 | 0 |
| Existing Site Adjustment Volume [veh/h] | 0 | 0 | 0 | 0 | 0 | 0 |
| Other Volume [veh/h] | 0 | 0 | 0 | 0 | 0 | 0 |
| Right-Turn on Red Volume [veh/h] | 0 | 0 | 0 | 0 | 0 | 0 |
| Total Hourly Volume [veh/h] | 70 | 250 | 130 | 300 | 480 | 80 |
| Peak Hour Factor | 0.9270 | 0.9270 | 0.9270 | 0.9270 | 0.9270 | 0.9270 |
| Other Adjustment Factor | 1.0000 | 1.0000 | 1.0000 | 1.0000 | 1.0000 | 1.0000 |
| Total 15-Minute Volume [veh/h] | 19 | 67 | 35 | 81 | 129 | 22 |
| Total Analysis Volume [veh/h] | 76 | 270 | 140 | 324 | 518 | 86 |
| Presence of On-Street Parking | No | No | No | No | No | No |
| On-Street Parking Maneuver Rate [/h] | 0 | 0 | 0 | 0 | 0 | 0 |
| Local Bus Stopping Rate [/h] | 0 | 0 | 0 | 0 | 0 | 0 |
| Pedestrian Volume [ped/h] | 0 | | 0 | | 0 | |
| Bicycle Volume [bicycles/h] | 0 | | 0 | | 0 | |

**Intersection Settings**

| | |
|---|---|
| Located in CBD | No |
| Signal Coordination Group | 3 - EW - Valley |
| Cycle Length [s] | 120 |
| Coordination Type | Time of Day Pattern Coordinated |
| Actuation Type | Fully actuated |
| Offset [s] | 0.0 |
| Offset Reference | LagFO |
| Permissive Mode | SingleBand |
| Lost time [s] | 12.00 |

**Phasing & Timing**

| Control Type | Split | Split | Protected | Permissive | Permissive | Permissive |
|---|---|---|---|---|---|---|
| Signal group | 1 | 0 | 3 | 8 | 4 | 0 |
| Auxiliary Signal Groups | | | | | | |
| Lead / Lag | Lead | - | Lead | - | - | - |
| Minimum Green [s] | 5 | 0 | 5 | 5 | 5 | 0 |
| Maximum Green [s] | 30 | 0 | 30 | 30 | 30 | 0 |
| Amber [s] | 4.1 | 0.0 | 4.4 | 4.4 | 4.4 | 0.0 |
| All red [s] | 1.0 | 0.0 | 1.0 | 1.0 | 1.0 | 0.0 |
| Split [s] | 56 | 0 | 24 | 64 | 40 | 0 |
| Vehicle Extension [s] | 3.0 | 0.0 | 3.0 | 3.0 | 3.0 | 0.0 |
| Walk [s] | 7 | 0 | 0 | 7 | 7 | 0 |
| Pedestrian Clearance [s] | 26 | 0 | 0 | 17 | 17 | 0 |
| I1, Start-Up Lost Time [s] | 2.0 | 0.0 | 2.0 | 2.0 | 2.0 | 0.0 |
| I2, Clearance Lost Time [s] | 3.1 | 0.0 | 3.4 | 3.4 | 3.4 | 0.0 |
| Minimum Recall | No | | No | No | No | |
| Maximum Recall | No | | No | No | No | |
| Pedestrian Recall | No | | No | No | No | |
| Detector Location [ft] | 0.0 | 0.0 | 0.0 | 0.0 | 0.0 | 0.0 |
| Detector Length [ft] | 0.0 | 0.0 | 0.0 | 0.0 | 0.0 | 0.0 |
| I, Upstream Filtering Factor | 1.00 | 1.00 | 1.00 | 1.00 | 1.00 | 1.00 |

**Exclusive Pedestrian Phase**

| | |
|---|---|
| Pedestrian Signal Group | 0 |
| Pedestrian Walk [s] | 0 |
| Pedestrian Clearance [s] | 0 |

**Lane Group Calculations**

| Lane Group | C | L | C | C | C |
|---|---|---|---|---|---|
| L, Total Lost Time per Cycle [s] | 5.10 | 5.40 | 5.40 | 5.40 | 5.40 |
| l1_p, Permitted Start-Up Lost Time [s] | 0.00 | 0.00 | 0.00 | 0.00 | 0.00 |
| l2, Clearance Lost Time [s] | 3.10 | 3.40 | 3.40 | 3.40 | 3.40 |
| g_i, Effective Green Time [s] | 28 | 12 | 82 | 65 | 65 |
| g / C, Green / Cycle | 0.23 | 0.10 | 0.68 | 0.54 | 0.54 |
| (v / s)_i Volume / Saturation Flow Rate | 0.21 | 0.08 | 0.09 | 0.12 | 0.12 |
| s, saturation flow rate [veh/h] | 1622 | 1740 | 3478 | 3478 | 1699 |
| c, Capacity [veh/h] | 376 | 168 | 2366 | 1873 | 915 |
| d1, Uniform Delay [s] | 44.95 | 51.28 | 1.84 | 8.46 | 8.48 |
| k, delay calibration | 0.11 | 0.11 | 0.50 | 0.50 | 0.50 |
| I, Upstream Filtering Factor | 1.00 | 1.00 | 1.00 | 1.00 | 1.00 |
| d2, Incremental Delay [s] | 9.33 | 10.06 | 0.12 | 0.26 | 0.55 |
| d3, Initial Queue Delay [s] | 0.00 | 0.00 | 0.00 | 0.00 | 0.00 |
| Rp, platoon ratio | 1.00 | 1.33 | 1.33 | 1.33 | 1.33 |
| PF, progression factor | 1.00 | 1.00 | 1.00 | 1.00 | 1.00 |

**Lane Group Results**

| | | | | | |
|---|---|---|---|---|---|
| X, volume / capacity | 0.92 | 0.83 | 0.14 | 0.21 | 0.22 |
| d, Delay for Lane Group [s/veh] | 54.28 | 61.34 | 1.96 | 8.72 | 9.03 |
| Lane Group LOS | D | E | A | A | A |
| Critical Lane Group | Yes | Yes | No | No | Yes |
| 50th-Percentile Queue Length [veh] | 10.86 | 4.39 | 0.39 | 1.66 | 1.74 |
| 50th-Percentile Queue Length [ft] | 271.51 | 109.70 | 9.87 | 41.58 | 43.47 |
| 95th-Percentile Queue Length [veh] | 16.27 | 7.82 | 0.71 | 2.99 | 3.13 |
| 95th-Percentile Queue Length [ft] | 406.63 | 195.58 | 17.76 | 74.85 | 78.24 |

**Movement, Approach, & Intersection Results**

| | | | | | | |
|---|---|---|---|---|---|---|
| d_M, Delay for Movement [s/veh] | 54.28 | 54.28 | 61.34 | 1.96 | 8.79 | 9.03 |
| Movement LOS | D | D | E | A | A | A |
| d_A, Approach Delay [s/veh] | 54.28 | | 19.87 | | 8.82 | |
| Approach LOS | D | | B | | A | |
| d_I, Intersection Delay [s/veh] | 23.57 | | | | | |
| Intersection LOS | C | | | | | |
| Intersection V/C | 0.458 | | | | | |

## Sequence

| | | | | | | | | | | | | | | | | |
|---|---|---|---|---|---|---|---|---|---|---|---|---|---|---|---|---|
| Ring 1 | 1 | 3 | 4 | - | - | - | - | - | - | - | - | - | - | - | - | - |
| Ring 2 | - | - | 8 | - | - | - | - | - | - | - | - | - | - | - | - | - |
| Ring 3 | - | - | - | - | - | - | - | - | - | - | - | - | - | - | - | - |
| Ring 4 | - | - | - | - | - | - | - | - | - | - | - | - | - | - | - | - |

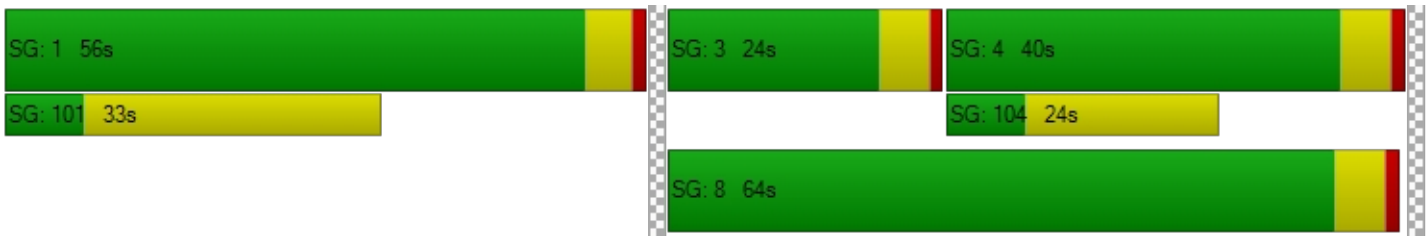

**Intersection Level Of Service Report**
**Intersection 6: Alder Ave (NS) / San Bernardino Ave (EW)**

| | | | |
|---|---|---|---|
| Control Type: | Signalized | Delay (sec / veh): | 20.6 |
| Analysis Method: | HCM 2010 | Level Of Service: | C |
| Analysis Period: | 15 minutes | Volume to Capacity (v/c): | 0.639 |

**Intersection Setup**

| Name | Alder Avenue | | | Alder Avenue | | | San Bernardino Avenue | | | San Bernardino Avenue | | |
|---|---|---|---|---|---|---|---|---|---|---|---|---|
| Approach | Northbound | | | Southbound | | | Eastbound | | | Westbound | | |
| Lane Configuration | | | | | | | | | | | | |
| Turning Movement | Left | Thru | Right | Left | Thru | Right | Left | Thru | Right | Left | Thru | Right |
| Lane Width [ft] | 12.00 | 12.00 | 12.00 | 12.00 | 12.00 | 12.00 | 12.00 | 12.00 | 12.00 | 12.00 | 12.00 | 12.00 |
| No. of Lanes in Pocket | 1 | 0 | 0 | 1 | 0 | 0 | 1 | 0 | 0 | 1 | 0 | 0 |
| Pocket Length [ft] | 100.00 | 100.00 | 100.00 | 100.00 | 100.00 | 100.00 | 100.00 | 100.00 | 100.00 | 80.00 | 100.00 | 100.00 |
| Speed [mph] | 40.00 | | | 40.00 | | | 35.00 | | | 35.00 | | |
| Grade [%] | 0.00 | | | 0.00 | | | 0.00 | | | 0.00 | | |
| Crosswalk | Yes | | | Yes | | | Yes | | | Yes | | |

**volumes**

| Name | Alder Avenue | | | Alder Avenue | | | San Bernardino Avenue | | | San Bernardino Avenue | | |
|---|---|---|---|---|---|---|---|---|---|---|---|---|
| Base Volume Input [veh/h] | 18 | 234 | 78 | 14 | 602 | 44 | 23 | 129 | 128 | 199 | 177 | 14 |
| Base Volume Adjustment Factor | 1.0000 | 1.0000 | 1.0000 | 1.0000 | 1.0000 | 1.0000 | 1.0000 | 1.0000 | 1.0000 | 1.0000 | 1.0000 | 1.0000 |
| Heavy Vehicles Percentage [%] | 2.00 | 2.00 | 2.00 | 2.00 | 2.00 | 2.00 | 2.00 | 2.00 | 2.00 | 2.00 | 2.00 | 2.00 |
| Growth Rate | 1.00 | 1.00 | 1.00 | 1.00 | 1.00 | 1.00 | 1.00 | 1.00 | 1.00 | 1.00 | 1.00 | 1.00 |
| In-Process Volume [veh/h] | 0 | 0 | 0 | 0 | 0 | 0 | 0 | 0 | 0 | 0 | 0 | 0 |
| Site-Generated Trips [veh/h] | 0 | 0 | 0 | 0 | 0 | 0 | 0 | 0 | 0 | 0 | 0 | 0 |
| Diverted Trips [veh/h] | 0 | 0 | 0 | 0 | 0 | 0 | 0 | 0 | 0 | 0 | 0 | 0 |
| Pass-by Trips [veh/h] | 0 | 0 | 0 | 0 | 0 | 0 | 0 | 0 | 0 | 0 | 0 | 0 |
| Existing Site Adjustment Volume [veh/h] | 0 | 0 | 0 | 0 | 0 | 0 | 0 | 0 | 0 | 0 | 0 | 0 |
| Other Volume [veh/h] | 0 | 0 | 0 | 0 | 0 | 0 | 0 | 0 | 0 | 0 | 0 | 0 |
| Right-Turn on Red Volume [veh/h] | 0 | 0 | 0 | 0 | 0 | 0 | 0 | 0 | 0 | 0 | 0 | 0 |
| Total Hourly Volume [veh/h] | 18 | 234 | 78 | 14 | 602 | 44 | 23 | 129 | 128 | 199 | 177 | 14 |
| Peak Hour Factor | 0.8530 | 0.8530 | 0.8530 | 0.8530 | 0.8530 | 0.8530 | 0.8530 | 0.8530 | 0.8530 | 0.8530 | 0.8530 | 0.8530 |
| Other Adjustment Factor | 1.0000 | 1.0000 | 1.0000 | 1.0000 | 1.0000 | 1.0000 | 1.0000 | 1.0000 | 1.0000 | 1.0000 | 1.0000 | 1.0000 |
| Total 15-Minute Volume [veh/h] | 5 | 69 | 23 | 4 | 176 | 13 | 7 | 38 | 38 | 58 | 52 | 4 |
| Total Analysis Volume [veh/h] | 21 | 274 | 91 | 16 | 706 | 52 | 27 | 151 | 150 | 233 | 208 | 16 |
| Presence of On-Street Parking | No | | No | No | | No | No | | No | No | | No |
| On-Street Parking Maneuver Rate [/h] | 0 | 0 | 0 | 0 | 0 | 0 | 0 | 0 | 0 | 0 | 0 | 0 |
| Local Bus Stopping Rate [/h] | 0 | 0 | 0 | 0 | 0 | 0 | 0 | 0 | 0 | 0 | 0 | 0 |
| Pedestrian Volume [ped/h] | 0 | | | 0 | | | 0 | | | 0 | | |
| Bicycle Volume [bicycles/h] | 0 | | | 0 | | | 0 | | | 0 | | |

**Intersection Settings**

| | |
|---|---|
| Located in CBD | No |
| Signal Coordination Group | - |
| Cycle Length [s] | 100 |
| Coordination Type | Time of Day Pattern Isolated |
| Actuation Type | Fully actuated |
| Offset [s] | 0.0 |
| Offset Reference | LagFO |
| Permissive Mode | SingleBand |
| Lost time [s] | 16.00 |

**Phasing & Timing**

| Control Type | Protecte | Permiss | Permiss | Protecte | Permiss | Permiss | Protecte | Permiss | Permiss | Protecte | Permiss | Permiss |
|---|---|---|---|---|---|---|---|---|---|---|---|---|
| Signal group | 5 | 2 | 0 | 1 | 6 | 0 | 3 | 8 | 0 | 7 | 4 | 0 |
| Auxiliary Signal Groups | | | | | | | | | | | | |
| Lead / Lag | Lead | - | - | Lead | - | - | Lead | - | - | Lead | - | - |
| Minimum Green [s] | 5 | 5 | 0 | 5 | 5 | 0 | 5 | 5 | 0 | 5 | 5 | 0 |
| Maximum Green [s] | 30 | 30 | 0 | 30 | 30 | 0 | 30 | 30 | 0 | 30 | 30 | 0 |
| Amber [s] | 4.4 | 4.4 | 0.0 | 4.4 | 4.4 | 0.0 | 4.1 | 4.1 | 0.0 | 4.1 | 4.1 | 0.0 |
| All red [s] | 1.0 | 1.0 | 0.0 | 1.0 | 1.0 | 0.0 | 1.0 | 1.0 | 0.0 | 1.0 | 1.0 | 0.0 |
| Split [s] | 11 | 37 | 0 | 11 | 37 | 0 | 13 | 37 | 0 | 15 | 39 | 0 |
| Vehicle Extension [s] | 3.0 | 3.0 | 0.0 | 3.0 | 3.0 | 0.0 | 3.0 | 3.0 | 0.0 | 3.0 | 3.0 | 0.0 |
| Walk [s] | 0 | 7 | 0 | 0 | 7 | 0 | 0 | 7 | 0 | 0 | 7 | 0 |
| Pedestrian Clearance [s] | 0 | 24 | 0 | 0 | 24 | 0 | 0 | 24 | 0 | 0 | 24 | 0 |
| I1, Start-Up Lost Time [s] | 2.0 | 2.0 | 0.0 | 2.0 | 2.0 | 0.0 | 2.0 | 2.0 | 0.0 | 2.0 | 2.0 | 0.0 |
| I2, Clearance Lost Time [s] | 3.4 | 3.4 | 0.0 | 3.4 | 3.4 | 0.0 | 3.1 | 3.1 | 0.0 | 3.1 | 3.1 | 0.0 |
| Minimum Recall | No | No | | No | No | | No | No | | No | No | |
| Maximum Recall | No | No | | No | No | | No | No | | No | No | |
| Pedestrian Recall | No | No | | No | No | | No | No | | No | No | |
| Detector Location [ft] | 0.0 | 0.0 | 0.0 | 0.0 | 0.0 | 0.0 | 0.0 | 0.0 | 0.0 | 0.0 | 0.0 | 0.0 |
| Detector Length [ft] | 0.0 | 0.0 | 0.0 | 0.0 | 0.0 | 0.0 | 0.0 | 0.0 | 0.0 | 0.0 | 0.0 | 0.0 |
| I, Upstream Filtering Factor | 1.00 | 1.00 | 1.00 | 1.00 | 1.00 | 1.00 | 1.00 | 1.00 | 1.00 | 1.00 | 1.00 | 1.00 |

**Exclusive Pedestrian Phase**

| | |
|---|---|
| Pedestrian Signal Group | 0 |
| Pedestrian Walk [s] | 0 |
| Pedestrian Clearance [s] | 0 |

**Lane Group Calculations**

| Lane Group | L | C | C | L | C | C | L | C | C | L | C | C |
|---|---|---|---|---|---|---|---|---|---|---|---|---|
| L, Total Lost Time per Cycle [s] | 5.40 | 5.40 | 5.40 | 5.40 | 5.40 | 5.40 | 5.10 | 5.10 | 5.10 | 5.10 | 5.10 | 5.10 |
| l1_p, Permitted Start-Up Lost Time [s] | 0.00 | 0.00 | 0.00 | 0.00 | 0.00 | 0.00 | 0.00 | 0.00 | 0.00 | 0.00 | 0.00 | 0.00 |
| l2, Clearance Lost Time [s] | 3.40 | 3.40 | 3.40 | 3.40 | 3.40 | 3.40 | 3.10 | 3.10 | 3.10 | 3.10 | 3.10 | 3.10 |
| g_i, Effective Green Time [s] | 1 | 14 | 14 | 1 | 14 | 14 | 2 | 7 | 7 | 9 | 15 | 15 |
| g / C, Green / Cycle | 0.03 | 0.27 | 0.27 | 0.02 | 0.26 | 0.26 | 0.03 | 0.14 | 0.14 | 0.17 | 0.28 | 0.28 |
| (v / s)_i Volume / Saturation Flow Rate | 0.01 | 0.10 | 0.10 | 0.01 | 0.21 | 0.21 | 0.02 | 0.08 | 0.09 | 0.13 | 0.06 | 0.06 |
| s, saturation flow rate [veh/h] | 1774 | 1863 | 1708 | 1774 | 1863 | 1818 | 1774 | 1863 | 1583 | 1774 | 1863 | 1817 |
| c, Capacity [veh/h] | 45 | 502 | 460 | 36 | 492 | 480 | 56 | 263 | 223 | 301 | 520 | 507 |
| d1, Uniform Delay [s] | 25.25 | 15.59 | 15.64 | 25.46 | 17.91 | 17.92 | 25.03 | 21.10 | 21.42 | 20.86 | 14.54 | 14.55 |
| k, delay calibration | 0.11 | 0.11 | 0.11 | 0.11 | 0.11 | 0.11 | 0.11 | 0.11 | 0.11 | 0.11 | 0.11 | 0.11 |
| I, Upstream Filtering Factor | 1.00 | 1.00 | 1.00 | 1.00 | 1.00 | 1.00 | 1.00 | 1.00 | 1.00 | 1.00 | 1.00 | 1.00 |
| d2, Incremental Delay [s] | 7.16 | 0.46 | 0.53 | 8.44 | 2.71 | 2.79 | 6.31 | 1.98 | 3.48 | 4.26 | 0.21 | 0.21 |
| d3, Initial Queue Delay [s] | 0.00 | 0.00 | 0.00 | 0.00 | 0.00 | 0.00 | 0.00 | 0.00 | 0.00 | 0.00 | 0.00 | 0.00 |
| Rp, platoon ratio | 1.00 | 1.00 | 1.00 | 1.00 | 1.00 | 1.00 | 1.00 | 1.00 | 1.00 | 1.00 | 1.00 | 1.00 |
| PF, progression factor | 1.00 | 1.00 | 1.00 | 1.00 | 1.00 | 1.00 | 1.00 | 1.00 | 1.00 | 1.00 | 1.00 | 1.00 |

**Lane Group Results**

| | | | | | | | | | | | | |
|---|---|---|---|---|---|---|---|---|---|---|---|---|
| X, volume / capacity | 0.46 | 0.37 | 0.39 | 0.45 | 0.78 | 0.78 | 0.48 | 0.57 | 0.67 | 0.77 | 0.22 | 0.22 |
| d, Delay for Lane Group [s/veh] | 32.41 | 16.05 | 16.17 | 33.90 | 20.63 | 20.71 | 31.34 | 23.08 | 24.90 | 25.11 | 14.75 | 14.76 |
| Lane Group LOS | C | B | B | C | C | C | C | C | C | C | B | B |
| Critical Lane Group | Yes | No | No | No | No | Yes | No | No | Yes | Yes | No | No |
| 50th-Percentile Queue Length [veh] | 0.32 | 1.59 | 1.51 | 0.26 | 3.93 | 3.85 | 0.40 | 1.69 | 1.77 | 2.76 | 0.92 | 0.90 |
| 50th-Percentile Queue Length [ft] | 8.01 | 39.65 | 37.78 | 6.51 | 98.23 | 96.25 | 9.98 | 42.18 | 44.29 | 69.07 | 22.96 | 22.58 |
| 95th-Percentile Queue Length [veh] | 0.58 | 2.85 | 2.72 | 0.47 | 7.07 | 6.93 | 0.72 | 3.04 | 3.19 | 4.97 | 1.65 | 1.63 |
| 95th-Percentile Queue Length [ft] | 14.43 | 71.36 | 68.01 | 11.72 | 176.81 | 173.24 | 17.96 | 75.92 | 79.72 | 124.33 | 41.33 | 40.64 |

**Movement, Approach, & Intersection Results**

| | | | | | | | | | | | | |
|---|---|---|---|---|---|---|---|---|---|---|---|---|
| d_M, Delay for Movement [s/veh] | 32.41 | 16.09 | 16.17 | 33.90 | 20.66 | 20.71 | 31.34 | 23.08 | 24.90 | 25.11 | 14.75 | 14.76 |
| Movement LOS | C | B | B | C | C | C | C | C | C | C | B | B |
| d_A, Approach Delay [s/veh] | 17.00 | | | 20.94 | | | 24.60 | | | 20.04 | | |
| Approach LOS | B | | | C | | | C | | | C | | |
| d_I, Intersection Delay [s/veh] | 20.56 | | | | | | | | | | | |
| Intersection LOS | C | | | | | | | | | | | |
| Intersection V/C | 0.639 | | | | | | | | | | | |

## Sequence

| | | | | | | | | | | | | | | | | |
|---|---|---|---|---|---|---|---|---|---|---|---|---|---|---|---|---|
| Ring 1 | 1 | 2 | 3 | 4 | - | - | - | - | - | - | - | - | - | - | - | - |
| Ring 2 | 5 | 6 | 7 | 8 | - | - | - | - | - | - | - | - | - | - | - | - |
| Ring 3 | - | - | - | - | - | - | - | - | - | - | - | - | - | - | - | - |
| Ring 4 | - | - | - | - | - | - | - | - | - | - | - | - | - | - | - | - |

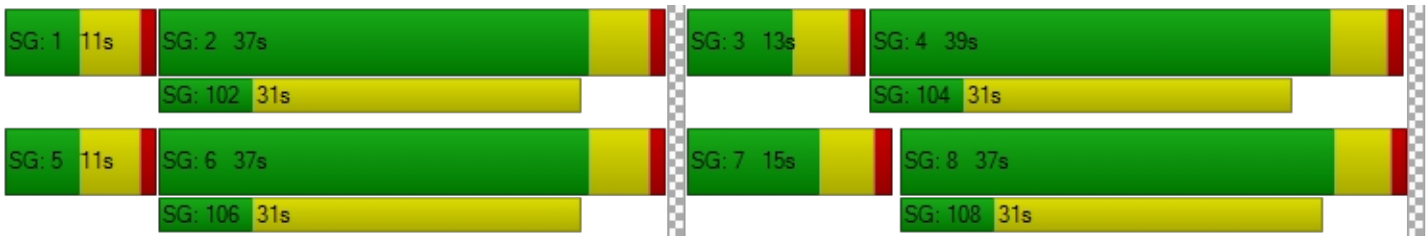

**Intersection Level Of Service Report**
**Intersection 7: Alder Ave (NS) / Marygold Ave (EW)**

| | | | |
|---|---|---|---|
| Control Type: | All-way stop | Delay (sec / veh): | 52.4 |
| Analysis Method: | HCM 2010 | Level Of Service: | F |
| Analysis Period: | 15 minutes | | |

**Intersection Setup**

| Name | Alder Avenue | | | Alder Avenue | | | Marygold Avenue | | | Marygold Avenue | | |
|---|---|---|---|---|---|---|---|---|---|---|---|---|
| Approach | Northbound | | | Southbound | | | Eastbound | | | Westbound | | |
| Lane Configuration | | | | | | | | | | | | |
| Turning Movement | Left | Thru | Right | Left | Thru | Right | Left | Thru | Right | Left | Thru | Right |
| Lane Width [ft] | 12.00 | 12.00 | 12.00 | 12.00 | 12.00 | 12.00 | 12.00 | 12.00 | 12.00 | 12.00 | 12.00 | 12.00 |
| No. of Lanes in Pocket | 0 | 0 | 1 | 0 | 0 | 0 | 0 | 0 | 0 | 0 | 0 | 0 |
| Pocket Length [ft] | 100.00 | 100.00 | 200.00 | 100.00 | 100.00 | 100.00 | 100.00 | 100.00 | 100.00 | 100.00 | 100.00 | 100.00 |
| Speed [mph] | 40.00 | | | 40.00 | | | 35.00 | | | 25.00 | | |
| Grade [%] | 0.00 | | | 0.00 | | | 0.00 | | | 0.00 | | |
| Crosswalk | Yes | | | Yes | | | Yes | | | Yes | | |

**volumes**

| Name | Alder Avenue | | | Alder Avenue | | | Marygold Avenue | | | Marygold Avenue | | |
|---|---|---|---|---|---|---|---|---|---|---|---|---|
| Base Volume Input [veh/h] | 18 | 326 | 20 | 17 | 621 | 192 | 60 | 17 | 33 | 40 | 30 | 5 |
| Base Volume Adjustment Factor | 1.0000 | 1.0000 | 1.0000 | 1.0000 | 1.0000 | 1.0000 | 1.0000 | 1.0000 | 1.0000 | 1.0000 | 1.0000 | 1.0000 |
| Heavy Vehicles Percentage [%] | 2.00 | 2.00 | 2.00 | 2.00 | 2.00 | 2.00 | 2.00 | 2.00 | 2.00 | 2.00 | 2.00 | 2.00 |
| Growth Rate | 1.00 | 1.00 | 1.00 | 1.00 | 1.00 | 1.00 | 1.00 | 1.00 | 1.00 | 1.00 | 1.00 | 1.00 |
| In-Process Volume [veh/h] | 0 | 0 | 0 | 0 | 0 | 0 | 0 | 0 | 0 | 0 | 0 | 0 |
| Site-Generated Trips [veh/h] | 0 | 0 | 0 | 0 | 0 | 0 | 0 | 0 | 0 | 0 | 0 | 0 |
| Diverted Trips [veh/h] | 0 | 0 | 0 | 0 | 0 | 0 | 0 | 0 | 0 | 0 | 0 | 0 |
| Pass-by Trips [veh/h] | 0 | 0 | 0 | 0 | 0 | 0 | 0 | 0 | 0 | 0 | 0 | 0 |
| Existing Site Adjustment Volume [veh/h] | 0 | 0 | 0 | 0 | 0 | 0 | 0 | 0 | 0 | 0 | 0 | 0 |
| Other Volume [veh/h] | 0 | 0 | 0 | 0 | 0 | 0 | 0 | 0 | 0 | 0 | 0 | 0 |
| Total Hourly Volume [veh/h] | 18 | 326 | 20 | 17 | 621 | 192 | 60 | 17 | 33 | 40 | 30 | 5 |
| Peak Hour Factor | 0.9220 | 0.9220 | 0.9220 | 0.9220 | 0.9220 | 0.9220 | 0.9220 | 0.9220 | 0.9220 | 0.9220 | 0.9220 | 0.9220 |
| Other Adjustment Factor | 1.0000 | 1.0000 | 1.0000 | 1.0000 | 1.0000 | 1.0000 | 1.0000 | 1.0000 | 1.0000 | 1.0000 | 1.0000 | 1.0000 |
| Total 15-Minute Volume [veh/h] | 5 | 88 | 5 | 5 | 168 | 52 | 16 | 5 | 9 | 11 | 8 | 1 |
| Total Analysis Volume [veh/h] | 20 | 354 | 22 | 18 | 674 | 208 | 65 | 18 | 36 | 43 | 33 | 5 |
| Pedestrian Volume [ped/h] | 0 | | | 0 | | | 0 | | | 0 | | |

**Intersection Settings**

**Lanes**

**Movement, Approach, & Intersection Results**

| | | | | | | |
|---|---|---|---|---|---|---|
| 95th-Percentile Queue Length [veh] | 4.71 | 0.10 | 21.37 | 1.23 | 0.85 | 0.56 |
| 95th-Percentile Queue Length [ft] | 117.74 | 2.62 | 534.30 | 30.74 | 21.37 | 14.04 |
| Approach Delay [s/veh] | 19.25 | | 76.00 | | 11.75 | 11.40 |
| Approach LOS | C | | F | | B | B |
| Intersection Delay [s/veh] | 52.37 | | | | | |
| Intersection LOS | F | | | | | |

**Intersection Level Of Service Report**
**Intersection 8: Alder Ave (NS) / Valley Blvd (EW)**

| | | | |
|---|---|---|---|
| Control Type: | Signalized | Delay (sec / veh): | 639.8 |
| Analysis Method: | HCM 2010 | Level Of Service: | F |
| Analysis Period: | 15 minutes | Volume to Capacity (v/c): | 4.551 |

**Intersection Setup**

| Name | Alder Avenue | | | Alder Avenue | | | Valley Boulevard | | | | | |
|---|---|---|---|---|---|---|---|---|---|---|---|---|
| Approach | Northbound | | | Southbound | | | Eastbound | | | Westbound | | |
| Lane Configuration | | | | | | | | | | | | |
| Turning Movement | Left | Thru | Right | Left | Thru | Right | Left | Thru | Right | Left | Thru | Right |
| Lane Width [ft] | 12.00 | 12.00 | 12.00 | 12.00 | 12.00 | 12.00 | 12.00 | 12.00 | 12.00 | 12.00 | 12.00 | 12.00 |
| No. of Lanes in Pocket | 0 | 0 | 1 | 0 | 0 | 0 | 1 | 0 | 0 | 1 | 0 | 0 |
| Pocket Length [ft] | 100.00 | 100.00 | 55.00 | 100.00 | 100.00 | 100.00 | 100.00 | 100.00 | 100.00 | 100.00 | 100.00 | 100.00 |
| Speed [mph] | 40.00 | | | 40.00 | | | 40.00 | | | 30.00 | | |
| Grade [%] | 0.00 | | | 0.00 | | | 0.00 | | | 0.00 | | |
| Crosswalk | Yes | | | Yes | | | Yes | | | Yes | | |

**volumes**

| Name | Alder Avenue | | | Alder Avenue | | | Valley Boulevard | | | | | |
|---|---|---|---|---|---|---|---|---|---|---|---|---|
| Base Volume Input [veh/h] | 194 | 194 | 102 | 99 | 495 | 76 | 78 | 333 | 304 | 230 | 240 | 79 |
| Base Volume Adjustment Factor | 1.0000 | 1.0000 | 1.0000 | 1.0000 | 1.0000 | 1.0000 | 1.0000 | 1.0000 | 1.0000 | 1.0000 | 1.0000 | 1.0000 |
| Heavy Vehicles Percentage [%] | 2.00 | 2.00 | 2.00 | 2.00 | 2.00 | 2.00 | 4.00 | 4.00 | 4.00 | 4.00 | 4.00 | 4.00 |
| Growth Rate | 1.00 | 1.00 | 1.00 | 1.00 | 1.00 | 1.00 | 1.00 | 1.00 | 1.00 | 1.00 | 1.00 | 1.00 |
| In-Process Volume [veh/h] | 0 | 0 | 0 | 0 | 0 | 0 | 0 | 0 | 0 | 0 | 0 | 0 |
| Site-Generated Trips [veh/h] | 0 | 0 | 0 | 0 | 0 | 0 | 0 | 0 | 0 | 0 | 0 | 0 |
| Diverted Trips [veh/h] | 0 | 0 | 0 | 0 | 0 | 0 | 0 | 0 | 0 | 0 | 0 | 0 |
| Pass-by Trips [veh/h] | 0 | 0 | 0 | 0 | 0 | 0 | 0 | 0 | 0 | 0 | 0 | 0 |
| Existing Site Adjustment Volume [veh/h] | 0 | 0 | 0 | 0 | 0 | 0 | 0 | 0 | 0 | 0 | 0 | 0 |
| Other Volume [veh/h] | 0 | 0 | 0 | 0 | 0 | 0 | 0 | 0 | 0 | 0 | 0 | 0 |
| Right-Turn on Red Volume [veh/h] | 0 | 0 | 0 | 0 | 0 | 0 | 0 | 0 | 0 | 0 | 0 | 0 |
| Total Hourly Volume [veh/h] | 194 | 194 | 102 | 99 | 495 | 76 | 78 | 333 | 304 | 230 | 240 | 79 |
| Peak Hour Factor | 0.8890 | 0.8890 | 0.8890 | 0.8890 | 0.8890 | 0.8890 | 0.8890 | 0.8890 | 0.8890 | 0.8890 | 0.8890 | 0.8890 |
| Other Adjustment Factor | 1.0000 | 1.0000 | 1.0000 | 1.0000 | 1.0000 | 1.0000 | 1.0000 | 1.0000 | 1.0000 | 1.0000 | 1.0000 | 1.0000 |
| Total 15-Minute Volume [veh/h] | 55 | 55 | 29 | 28 | 139 | 21 | 22 | 94 | 85 | 65 | 67 | 22 |
| Total Analysis Volume [veh/h] | 218 | 218 | 115 | 111 | 557 | 85 | 88 | 375 | 342 | 259 | 270 | 89 |
| Presence of On-Street Parking | No | | No | No | | No | No | | No | No | | No |
| On-Street Parking Maneuver Rate [/h] | 0 | 0 | 0 | 0 | 0 | 0 | 0 | 0 | 0 | 0 | 0 | 0 |
| Local Bus Stopping Rate [/h] | 0 | 0 | 0 | 0 | 0 | 0 | 0 | 0 | 0 | 0 | 0 | 0 |
| Pedestrian Volume [ped/h] | 0 | | | 0 | | | 0 | | | 0 | | |
| Bicycle Volume [bicycles/h] | 0 | | | 0 | | | 0 | | | 0 | | |

**Intersection Settings**

| | |
|---|---|
| Located in CBD | No |
| Signal Coordination Group | 3 - EW - Valley |
| Cycle Length [s] | 120 |
| Coordination Type | Time of Day Pattern Coordinated |
| Actuation Type | Fully actuated |
| Offset [s] | 44.0 |
| Offset Reference | LagFO |
| Permissive Mode | SingleBand |
| Lost time [s] | 12.00 |

**Phasing & Timing**

| Control Type | Permiss | Permiss | Permiss | Permiss | Permiss | Permiss | Protecte | Permiss | Permiss | Protecte | Permiss | Permiss |
|---|---|---|---|---|---|---|---|---|---|---|---|---|
| Signal group | 0 | 2 | 0 | 0 | 6 | 0 | 3 | 8 | 0 | 7 | 4 | 0 |
| Auxiliary Signal Groups | | | | | | | | | | | | |
| Lead / Lag | - | - | - | - | - | - | Lead | - | - | Lead | - | - |
| Minimum Green [s] | 0 | 5 | 0 | 0 | 5 | 0 | 5 | 5 | 0 | 5 | 5 | 0 |
| Maximum Green [s] | 0 | 30 | 0 | 0 | 30 | 0 | 30 | 30 | 0 | 30 | 30 | 0 |
| Amber [s] | 0.0 | 4.4 | 0.0 | 0.0 | 4.4 | 0.0 | 4.4 | 4.4 | 0.0 | 3.7 | 3.7 | 0.0 |
| All red [s] | 0.0 | 1.0 | 0.0 | 0.0 | 1.0 | 0.0 | 1.0 | 1.0 | 0.0 | 1.0 | 1.0 | 0.0 |
| Split [s] | 0 | 71 | 0 | 0 | 71 | 0 | 12 | 35 | 0 | 14 | 37 | 0 |
| Vehicle Extension [s] | 0.0 | 3.0 | 0.0 | 0.0 | 3.0 | 0.0 | 3.0 | 3.0 | 0.0 | 3.0 | 3.0 | 0.0 |
| Walk [s] | 0 | 7 | 0 | 0 | 7 | 0 | 0 | 7 | 0 | 0 | 7 | 0 |
| Pedestrian Clearance [s] | 0 | 25 | 0 | 0 | 29 | 0 | 0 | 22 | 0 | 0 | 21 | 0 |
| I1, Start-Up Lost Time [s] | 0.0 | 2.0 | 0.0 | 0.0 | 2.0 | 0.0 | 2.0 | 2.0 | 0.0 | 2.0 | 2.0 | 0.0 |
| I2, Clearance Lost Time [s] | 0.0 | 3.4 | 0.0 | 0.0 | 3.4 | 0.0 | 3.4 | 3.4 | 0.0 | 2.7 | 2.7 | 0.0 |
| Minimum Recall | | No | | | No | | No | No | | No | No | |
| Maximum Recall | | No | | | No | | No | No | | No | No | |
| Pedestrian Recall | | No | | | No | | No | No | | No | No | |
| Detector Location [ft] | 0.0 | 0.0 | 0.0 | 0.0 | 0.0 | 0.0 | 0.0 | 0.0 | 0.0 | 0.0 | 0.0 | 0.0 |
| Detector Length [ft] | 0.0 | 0.0 | 0.0 | 0.0 | 0.0 | 0.0 | 0.0 | 0.0 | 0.0 | 0.0 | 0.0 | 0.0 |
| I, Upstream Filtering Factor | 1.00 | 1.00 | 1.00 | 1.00 | 1.00 | 1.00 | 1.00 | 1.00 | 1.00 | 1.00 | 1.00 | 1.00 |

**Exclusive Pedestrian Phase**

| | |
|---|---|
| Pedestrian Signal Group | 0 |
| Pedestrian Walk [s] | 0 |
| Pedestrian Clearance [s] | 0 |

**Lane Group Calculations**

| Lane Group | C | R | C | L | C | C | L | C | C |
|---|---|---|---|---|---|---|---|---|---|
| L, Total Lost Time per Cycle [s] | 5.40 | 5.40 | 5.40 | 5.40 | 5.40 | 5.40 | 4.70 | 4.70 | 4.70 |
| l1_p, Permitted Start-Up Lost Time [s] | 2.00 | 0.00 | 2.00 | 0.00 | 0.00 | 0.00 | 0.00 | 0.00 | 0.00 |
| l2, Clearance Lost Time [s] | 3.40 | 3.40 | 3.40 | 3.40 | 3.40 | 3.40 | 2.70 | 2.70 | 2.70 |
| g_i, Effective Green Time [s] | 66 | 66 | 66 | 7 | 30 | 30 | 9 | 32 | 32 |
| g / C, Green / Cycle | 0.55 | 0.55 | 0.55 | 0.06 | 0.25 | 0.25 | 0.08 | 0.27 | 0.27 |
| (v / s)_i Volume / Saturation Flow Rate | 0.86 | 0.07 | 3.73 | 0.05 | 0.21 | 0.22 | 0.15 | 0.10 | 0.10 |
| s, saturation flow rate [veh/h] | 508 | 1583 | 202 | 1740 | 1827 | 1553 | 1740 | 1827 | 1675 |
| c, Capacity [veh/h] | 323 | 865 | 145 | 98 | 448 | 381 | 138 | 490 | 449 |
| d1, Uniform Delay [s] | 30.31 | 13.31 | 42.57 | 55.18 | 38.16 | 38.95 | 53.67 | 31.13 | 31.17 |
| k, delay calibration | 0.50 | 0.11 | 0.50 | 0.19 | 0.50 | 0.50 | 0.50 | 0.50 | 0.50 |
| I, Upstream Filtering Factor | 1.00 | 1.00 | 1.00 | 1.00 | 1.00 | 1.00 | 1.00 | 1.00 | 1.00 |
| d2, Incremental Delay [s] | 177.11 | 0.07 | 1904.90 | 35.49 | 16.78 | 26.41 | 423.12 | 2.24 | 2.48 |
| d3, Initial Queue Delay [s] | 0.00 | 0.00 | 0.00 | 0.00 | 0.00 | 0.00 | 0.00 | 0.00 | 0.00 |
| Rp, platoon ratio | 1.00 | 1.00 | 1.00 | 1.33 | 1.33 | 1.33 | 1.33 | 1.33 | 1.33 |
| PF, progression factor | 1.00 | 1.00 | 1.00 | 1.00 | 1.00 | 1.00 | 1.00 | 1.00 | 1.00 |

**Lane Group Results**

| | | | | | | | | | |
|---|---|---|---|---|---|---|---|---|---|
| X, volume / capacity | 1.35 | 0.13 | 5.20 | 0.90 | 0.84 | 0.90 | 1.88 | 0.38 | 0.38 |
| d, Delay for Lane Group [s/veh] | 207.42 | 13.38 | 1947.47 | 90.67 | 54.94 | 65.36 | 476.79 | 33.36 | 33.65 |
| Lane Group LOS | F | B | F | F | D | E | F | C | C |
| Critical Lane Group | No | No | Yes | No | No | Yes | Yes | No | No |
| 50th-Percentile Queue Length [veh] | 25.56 | 1.48 | 79.79 | 3.52 | 11.36 | 11.49 | 20.21 | 4.16 | 3.89 |
| 50th-Percentile Queue Length [ft] | 638.92 | 36.92 | 1994.75 | 87.93 | 283.98 | 287.20 | 505.15 | 104.11 | 97.29 |
| 95th-Percentile Queue Length [veh] | 40.98 | 2.66 | 138.60 | 6.33 | 16.89 | 17.05 | 32.46 | 7.50 | 7.00 |
| 95th-Percentile Queue Length [ft] | 1024.59 | 66.46 | 3464.89 | 158.27 | 422.17 | 426.16 | 811.52 | 187.39 | 175.11 |

**Movement, Approach, & Intersection Results**

| | | | | | | | | | | | | |
|---|---|---|---|---|---|---|---|---|---|---|---|---|
| d_M, Delay for Movement [s/veh] | 207.42 | 207.42 | 13.38 | 1947.47 | 1947.47 | 1947.47 | 90.67 | 54.94 | 65.36 | 476.79 | 33.45 | 33.65 |
| Movement LOS | F | F | B | F | F | F | F | D | E | F | C | C |
| d_A, Approach Delay [s/veh] | 166.92 | | | 1947.47 | | | 63.27 | | | 219.28 | | |
| Approach LOS | F | | | F | | | E | | | F | | |
| d_I, Intersection Delay [s/veh] | 639.85 | | | | | | | | | | | |
| Intersection LOS | F | | | | | | | | | | | |
| Intersection V/C | 4.551 | | | | | | | | | | | |

## Sequence

| | | | | | | | | | | | | | | | | |
|---|---|---|---|---|---|---|---|---|---|---|---|---|---|---|---|---|
| Ring 1 | 2 | 3 | 4 | - | - | - | - | - | - | - | - | - | - | - | - | - |
| Ring 2 | 6 | 7 | 8 | - | - | - | - | - | - | - | - | - | - | - | - | - |
| Ring 3 | - | - | - | - | - | - | - | - | - | - | - | - | - | - | - | - |
| Ring 4 | - | - | - | - | - | - | - | - | - | - | - | - | - | - | - | - |

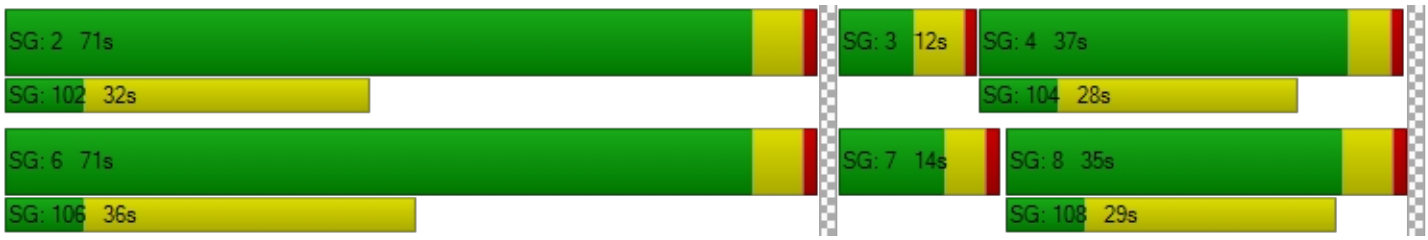

**Intersection Level Of Service Report**
**Intersection 9: Locust Ave (NS) / Marygold Ave (EW)**

| | | | |
|---|---|---|---|
| Control Type: | All-way stop | Delay (sec / veh): | 12.2 |
| Analysis Method: | HCM 2010 | Level Of Service: | B |
| Analysis Period: | 15 minutes | | |

**Intersection Setup**

| Name | Locust Avenue | | | Locust Avenue | | | Marygold Avenue | | | | | |
|---|---|---|---|---|---|---|---|---|---|---|---|---|
| Approach | Northbound | | | Southbound | | | Eastbound | | | Westbound | | |
| Lane Configuration | | | | | | | | | | | | |
| Turning Movement | Left | Thru | Right | Left | Thru | Right | Left | Thru | Right | Left | Thru | Right |
| Lane Width [ft] | 12.00 | 12.00 | 12.00 | 12.00 | 12.00 | 12.00 | 12.00 | 12.00 | 12.00 | 12.00 | 12.00 | 12.00 |
| No. of Lanes in Pocket | 0 | 0 | 1 | 0 | 0 | 1 | 0 | 0 | 0 | 0 | 0 | 0 |
| Pocket Length [ft] | 100.00 | 100.00 | 100.00 | 100.00 | 100.00 | 325.00 | 100.00 | 100.00 | 100.00 | 100.00 | 100.00 | 100.00 |
| Speed [mph] | 30.00 | | | 40.00 | | | 30.00 | | | 30.00 | | |
| Grade [%] | 0.00 | | | 0.00 | | | 0.00 | | | 0.00 | | |
| Crosswalk | Yes | | | Yes | | | Yes | | | Yes | | |

**volumes**

| Name | Locust Avenue | | | Locust Avenue | | | Marygold Avenue | | | | | |
|---|---|---|---|---|---|---|---|---|---|---|---|---|
| Base Volume Input [veh/h] | 29 | 131 | 29 | 30 | 303 | 28 | 6 | 51 | 71 | 52 | 73 | 13 |
| Base Volume Adjustment Factor | 1.0000 | 1.0000 | 1.0000 | 1.0000 | 1.0000 | 1.0000 | 1.0000 | 1.0000 | 1.0000 | 1.0000 | 1.0000 | 1.0000 |
| Heavy Vehicles Percentage [%] | 2.00 | 2.00 | 2.00 | 2.00 | 2.00 | 2.00 | 2.00 | 2.00 | 2.00 | 2.00 | 2.00 | 2.00 |
| Growth Rate | 1.00 | 1.00 | 1.00 | 1.00 | 1.00 | 1.00 | 1.00 | 1.00 | 1.00 | 1.00 | 1.00 | 1.00 |
| In-Process Volume [veh/h] | 0 | 0 | 0 | 0 | 0 | 0 | 0 | 0 | 0 | 0 | 0 | 0 |
| Site-Generated Trips [veh/h] | 0 | 0 | 0 | 0 | 0 | 0 | 0 | 0 | 0 | 0 | 0 | 0 |
| Diverted Trips [veh/h] | 0 | 0 | 0 | 0 | 0 | 0 | 0 | 0 | 0 | 0 | 0 | 0 |
| Pass-by Trips [veh/h] | 0 | 0 | 0 | 0 | 0 | 0 | 0 | 0 | 0 | 0 | 0 | 0 |
| Existing Site Adjustment Volume [veh/h] | 0 | 0 | 0 | 0 | 0 | 0 | 0 | 0 | 0 | 0 | 0 | 0 |
| Other Volume [veh/h] | 0 | 0 | 0 | 0 | 0 | 0 | 0 | 0 | 0 | 0 | 0 | 0 |
| Total Hourly Volume [veh/h] | 29 | 131 | 29 | 30 | 303 | 28 | 6 | 51 | 71 | 52 | 73 | 13 |
| Peak Hour Factor | 0.9500 | 0.9500 | 0.9500 | 0.9500 | 0.9500 | 0.9500 | 0.9500 | 0.9500 | 0.9500 | 0.9500 | 0.9500 | 0.9500 |
| Other Adjustment Factor | 1.0000 | 1.0000 | 1.0000 | 1.0000 | 1.0000 | 1.0000 | 1.0000 | 1.0000 | 1.0000 | 1.0000 | 1.0000 | 1.0000 |
| Total 15-Minute Volume [veh/h] | 8 | 34 | 8 | 8 | 80 | 7 | 2 | 13 | 19 | 14 | 19 | 3 |
| Total Analysis Volume [veh/h] | 31 | 138 | 31 | 32 | 319 | 29 | 6 | 54 | 75 | 55 | 77 | 14 |
| Pedestrian Volume [ped/h] | 0 | | | 0 | | | 0 | | | 0 | | |

**Intersection Settings**

**Lanes**

**Movement, Approach, & Intersection Results**

| | | | | | | |
|---|---|---|---|---|---|---|
| 95th-Percentile Queue Length [veh] | 1.14 | 0.14 | 3.39 | 0.12 | 0.76 | 0.90 |
| 95th-Percentile Queue Length [ft] | 28.44 | 3.47 | 84.73 | 3.09 | 18.96 | 22.39 |
| Approach Delay [s/veh] | 10.49 | | 14.60 | | 9.81 | 10.46 |
| Approach LOS | B | | B | | A | B |
| Intersection Delay [s/veh] | 12.19 | | | | | |
| Intersection LOS | B | | | | | |

**Intersection Level Of Service Report**
**Intersection 10: Locust Ave (NS) / Valley Blvd (EW)**

| | | | |
|---|---|---|---|
| Control Type: | Signalized | Delay (sec / veh): | 29.3 |
| Analysis Method: | HCM 2010 | Level Of Service: | C |
| Analysis Period: | 15 minutes | Volume to Capacity (v/c): | 0.464 |

**Intersection Setup**

| Name | Locust Avenue | | | Locust Avenue | | | Valley Boulevard | | | Valley Boulevard | | |
|---|---|---|---|---|---|---|---|---|---|---|---|---|
| Approach | Northbound | | | Southbound | | | Eastbound | | | Westbound | | |
| Lane Configuration | | | | | | | | | | | | |
| Turning Movement | Left | Thru | Right | Left | Thru | Right | Left | Thru | Right | Left | Thru | Right |
| Lane Width [ft] | 12.00 | 12.00 | 12.00 | 12.00 | 12.00 | 12.00 | 12.00 | 12.00 | 12.00 | 12.00 | 12.00 | 12.00 |
| No. of Lanes in Pocket | 0 | 0 | 0 | 0 | 0 | 0 | 1 | 0 | 0 | 1 | 0 | 0 |
| Pocket Length [ft] | 100.00 | 100.00 | 100.00 | 100.00 | 100.00 | 100.00 | 100.00 | 100.00 | 100.00 | 200.00 | 100.00 | 100.00 |
| Speed [mph] | 30.00 | | | 40.00 | | | 45.00 | | | 45.00 | | |
| Grade [%] | 0.00 | | | 0.00 | | | 0.00 | | | 0.00 | | |
| Crosswalk | Yes | | | Yes | | | No | | | Yes | | |

**volumes**

| Name | Locust Avenue | | | Locust Avenue | | | Valley Boulevard | | | Valley Boulevard | | |
|---|---|---|---|---|---|---|---|---|---|---|---|---|
| Base Volume Input [veh/h] | 2 | 8 | 24 | 101 | 14 | 225 | 95 | 268 | 7 | 92 | 333 | 48 |
| Base Volume Adjustment Factor | 1.0000 | 1.0000 | 1.0000 | 1.0000 | 1.0000 | 1.0000 | 1.0000 | 1.0000 | 1.0000 | 1.0000 | 1.0000 | 1.0000 |
| Heavy Vehicles Percentage [%] | 2.00 | 2.00 | 2.00 | 2.00 | 2.00 | 2.00 | 4.00 | 4.00 | 4.00 | 4.00 | 4.00 | 4.00 |
| Growth Rate | 1.00 | 1.00 | 1.00 | 1.00 | 1.00 | 1.00 | 1.00 | 1.00 | 1.00 | 1.00 | 1.00 | 1.00 |
| In-Process Volume [veh/h] | 0 | 0 | 0 | 0 | 0 | 0 | 0 | 0 | 0 | 0 | 0 | 0 |
| Site-Generated Trips [veh/h] | 0 | 0 | 0 | 0 | 0 | 0 | 0 | 0 | 0 | 0 | 0 | 0 |
| Diverted Trips [veh/h] | 0 | 0 | 0 | 0 | 0 | 0 | 0 | 0 | 0 | 0 | 0 | 0 |
| Pass-by Trips [veh/h] | 0 | 0 | 0 | 0 | 0 | 0 | 0 | 0 | 0 | 0 | 0 | 0 |
| Existing Site Adjustment Volume [veh/h] | 0 | 0 | 0 | 0 | 0 | 0 | 0 | 0 | 0 | 0 | 0 | 0 |
| Other Volume [veh/h] | 0 | 0 | 0 | 0 | 0 | 0 | 0 | 0 | 0 | 0 | 0 | 0 |
| Right-Turn on Red Volume [veh/h] | 0 | 0 | 0 | 0 | 0 | 0 | 0 | 0 | 0 | 0 | 0 | 0 |
| Total Hourly Volume [veh/h] | 2 | 8 | 24 | 101 | 14 | 225 | 95 | 268 | 7 | 92 | 333 | 48 |
| Peak Hour Factor | 0.9100 | 0.9100 | 0.9100 | 0.9100 | 0.9100 | 0.9100 | 0.9100 | 0.9100 | 0.9100 | 0.9100 | 0.9100 | 0.9100 |
| Other Adjustment Factor | 1.0000 | 1.0000 | 1.0000 | 1.0000 | 1.0000 | 1.0000 | 1.0000 | 1.0000 | 1.0000 | 1.0000 | 1.0000 | 1.0000 |
| Total 15-Minute Volume [veh/h] | 1 | 2 | 7 | 28 | 4 | 62 | 26 | 74 | 2 | 25 | 91 | 13 |
| Total Analysis Volume [veh/h] | 2 | 9 | 26 | 111 | 15 | 247 | 104 | 295 | 8 | 101 | 366 | 53 |
| Presence of On-Street Parking | No | | No | No | | No | No | | No | No | | No |
| On-Street Parking Maneuver Rate [/h] | 0 | 0 | 0 | 0 | 0 | 0 | 0 | 0 | 0 | 0 | 0 | 0 |
| Local Bus Stopping Rate [/h] | 0 | 0 | 0 | 0 | 0 | 0 | 0 | 0 | 0 | 0 | 0 | 0 |
| Pedestrian Volume [ped/h] | 0 | | | 0 | | | 0 | | | 0 | | |
| Bicycle Volume [bicycles/h] | 0 | | | 0 | | | 0 | | | 0 | | |

**Intersection Settings**

| | |
|---|---|
| Located in CBD | No |
| Signal Coordination Group | 3 - EW - Valley |
| Cycle Length [s] | 120 |
| Coordination Type | Time of Day Pattern Coordinated |
| Actuation Type | Fully actuated |
| Offset [s] | 45.0 |
| Offset Reference | LagFO |
| Permissive Mode | SingleBand |
| Lost time [s] | 12.00 |

**Phasing & Timing**

| Control Type | Permiss | Permiss | Permiss | Permiss | Permiss | Permiss | Protecte | Permiss | Permiss | Protecte | Permiss | Permiss |
|---|---|---|---|---|---|---|---|---|---|---|---|---|
| Signal group | 0 | 2 | 0 | 0 | 6 | 0 | 3 | 8 | 0 | 7 | 4 | 0 |
| Auxiliary Signal Groups | | | | | | | | | | | | |
| Lead / Lag | - | - | - | - | - | - | Lead | - | - | Lead | - | - |
| Minimum Green [s] | 0 | 5 | 0 | 0 | 5 | 0 | 5 | 5 | 0 | 5 | 5 | 0 |
| Maximum Green [s] | 0 | 30 | 0 | 0 | 30 | 0 | 30 | 30 | 0 | 30 | 30 | 0 |
| Amber [s] | 0.0 | 3.7 | 0.0 | 0.0 | 4.4 | 0.0 | 4.8 | 4.8 | 0.0 | 4.8 | 4.8 | 0.0 |
| All red [s] | 0.0 | 1.0 | 0.0 | 0.0 | 1.0 | 0.0 | 1.0 | 1.0 | 0.0 | 1.0 | 1.0 | 0.0 |
| Split [s] | 0 | 59 | 0 | 0 | 59 | 0 | 19 | 42 | 0 | 19 | 42 | 0 |
| Vehicle Extension [s] | 0.0 | 3.0 | 0.0 | 0.0 | 3.0 | 0.0 | 3.0 | 3.0 | 0.0 | 3.0 | 3.0 | 0.0 |
| Walk [s] | 0 | 7 | 0 | 0 | 7 | 0 | 0 | 7 | 0 | 0 | 7 | 0 |
| Pedestrian Clearance [s] | 0 | 26 | 0 | 0 | 10 | 0 | 0 | 16 | 0 | 0 | 19 | 0 |
| I1, Start-Up Lost Time [s] | 0.0 | 2.0 | 0.0 | 0.0 | 2.0 | 0.0 | 2.0 | 2.0 | 0.0 | 2.0 | 2.0 | 0.0 |
| I2, Clearance Lost Time [s] | 0.0 | 2.7 | 0.0 | 0.0 | 3.4 | 0.0 | 3.8 | 3.8 | 0.0 | 3.8 | 3.8 | 0.0 |
| Minimum Recall | | No | | | No | | No | No | | No | No | |
| Maximum Recall | | No | | | No | | No | No | | No | No | |
| Pedestrian Recall | | No | | | No | | No | No | | No | No | |
| Detector Location [ft] | 0.0 | 0.0 | 0.0 | 0.0 | 0.0 | 0.0 | 0.0 | 0.0 | 0.0 | 0.0 | 0.0 | 0.0 |
| Detector Length [ft] | 0.0 | 0.0 | 0.0 | 0.0 | 0.0 | 0.0 | 0.0 | 0.0 | 0.0 | 0.0 | 0.0 | 0.0 |
| I, Upstream Filtering Factor | 1.00 | 1.00 | 1.00 | 1.00 | 1.00 | 1.00 | 1.00 | 1.00 | 1.00 | 1.00 | 1.00 | 1.00 |

**Exclusive Pedestrian Phase**

| | |
|---|---|
| Pedestrian Signal Group | 0 |
| Pedestrian Walk [s] | 0 |
| Pedestrian Clearance [s] | 0 |

**Lane Group Calculations**

| Lane Group | C | C | L | C | C | L | C | C |
|---|---|---|---|---|---|---|---|---|
| L, Total Lost Time per Cycle [s] | 4.70 | 5.40 | 5.80 | 5.80 | 5.80 | 5.80 | 5.80 | 5.80 |
| l1_p, Permitted Start-Up Lost Time [s] | 2.00 | 2.00 | 0.00 | 0.00 | 0.00 | 0.00 | 0.00 | 0.00 |
| l2, Clearance Lost Time [s] | 0.00 | 3.40 | 3.80 | 3.80 | 3.80 | 3.80 | 3.80 | 3.80 |
| g_i, Effective Green Time [s] | 32 | 31 | 9 | 63 | 63 | 9 | 63 | 63 |
| g / C, Green / Cycle | 0.26 | 0.26 | 0.07 | 0.53 | 0.53 | 0.07 | 0.53 | 0.53 |
| (v / s)_i Volume / Saturation Flow Rate | 0.02 | 0.24 | 0.06 | 0.08 | 0.08 | 0.06 | 0.12 | 0.12 |
| s, saturation flow rate [veh/h] | 1671 | 1552 | 1740 | 1827 | 1810 | 1740 | 1827 | 1748 |
| c, Capacity [veh/h] | 444 | 439 | 130 | 964 | 955 | 127 | 960 | 919 |
| d1, Uniform Delay [s] | 33.27 | 43.22 | 53.06 | 8.89 | 8.89 | 53.22 | 9.24 | 9.25 |
| k, delay calibration | 0.11 | 0.11 | 0.11 | 0.50 | 0.50 | 0.11 | 0.50 | 0.50 |
| I, Upstream Filtering Factor | 1.00 | 1.00 | 1.00 | 1.00 | 1.00 | 1.00 | 1.00 | 1.00 |
| d2, Incremental Delay [s] | 0.08 | 4.87 | 10.50 | 0.35 | 0.35 | 10.58 | 0.53 | 0.56 |
| d3, Initial Queue Delay [s] | 0.00 | 0.00 | 0.00 | 0.00 | 0.00 | 0.00 | 0.00 | 0.00 |
| Rp, platoon ratio | 1.00 | 1.00 | 1.33 | 1.33 | 1.33 | 1.33 | 1.33 | 1.33 |
| PF, progression factor | 1.00 | 1.00 | 1.00 | 1.00 | 1.00 | 1.00 | 1.00 | 1.00 |

**Lane Group Results**

| | | | | | | | | |
|---|---|---|---|---|---|---|---|---|
| X, volume / capacity | 0.08 | 0.85 | 0.80 | 0.16 | 0.16 | 0.79 | 0.22 | 0.22 |
| d, Delay for Lane Group [s/veh] | 33.35 | 48.10 | 63.56 | 9.24 | 9.25 | 63.80 | 9.78 | 9.82 |
| Lane Group LOS | C | D | E | A | A | E | A | A |
| Critical Lane Group | No | Yes | Yes | No | No | No | No | Yes |
| 50th-Percentile Queue Length [veh] | 0.83 | 11.08 | 3.31 | 1.32 | 1.31 | 3.22 | 1.92 | 1.86 |
| 50th-Percentile Queue Length [ft] | 20.73 | 276.91 | 82.76 | 32.97 | 32.79 | 80.57 | 47.94 | 46.50 |
| 95th-Percentile Queue Length [veh] | 1.49 | 16.53 | 5.96 | 2.37 | 2.36 | 5.80 | 3.45 | 3.35 |
| 95th-Percentile Queue Length [ft] | 37.31 | 413.36 | 148.97 | 59.34 | 59.03 | 145.03 | 86.30 | 83.69 |

**Movement, Approach, & Intersection Results**

| | | | | | | | | | | | | |
|---|---|---|---|---|---|---|---|---|---|---|---|---|
| d_M, Delay for Movement [s/veh] | 33.35 | 33.35 | 33.35 | 48.10 | 48.10 | 48.10 | 63.56 | 9.24 | 9.25 | 63.80 | 9.79 | 9.82 |
| Movement LOS | C | C | C | D | D | D | E | A | A | E | A | A |
| d_A, Approach Delay [s/veh] | 33.35 | | | 48.10 | | | 23.12 | | | 20.29 | | |
| Approach LOS | C | | | D | | | C | | | C | | |
| d_I, Intersection Delay [s/veh] | 29.27 | | | | | | | | | | | |
| Intersection LOS | C | | | | | | | | | | | |
| Intersection V/C | 0.464 | | | | | | | | | | | |

## Sequence

| | | | | | | | | | | | | | | | | |
|---|---|---|---|---|---|---|---|---|---|---|---|---|---|---|---|---|
| Ring 1 | 2 | 3 | 4 | - | - | - | - | - | - | - | - | - | - | - | - | - |
| Ring 2 | 6 | 7 | 8 | - | - | - | - | - | - | - | - | - | - | - | - | - |
| Ring 3 | - | - | - | - | - | - | - | - | - | - | - | - | - | - | - | - |
| Ring 4 | - | - | - | - | - | - | - | - | - | - | - | - | - | - | - | - |

**Intersection Level Of Service Report**
**Intersection 11: Cedar Ave (NS) / San Bernardino Ave (EW)**

| | | | |
|---|---|---|---|
| Control Type: | Signalized | Delay (sec / veh): | 29.0 |
| Analysis Method: | HCM 2010 | Level Of Service: | C |
| Analysis Period: | 15 minutes | Volume to Capacity (v/c): | 0.677 |

**Intersection Setup**

| Name | Cedar Avenue | | | Cedar Avenue | | | | | | San Bernardino Avenue | | |
|---|---|---|---|---|---|---|---|---|---|---|---|---|
| Approach | Northbound | | | Southbound | | | Eastbound | | | Westbound | | |
| Lane Configuration | | | | | | | | | | | | |
| Turning Movement | Left | Thru | Right | Left | Thru | Right | Left | Thru | Right | Left | Thru | Right |
| Lane Width [ft] | 12.00 | 12.00 | 12.00 | 12.00 | 12.00 | 12.00 | 12.00 | 12.00 | 12.00 | 12.00 | 12.00 | 12.00 |
| No. of Lanes in Pocket | 1 | 0 | 0 | 1 | 0 | 0 | 1 | 0 | 1 | 1 | 0 | 0 |
| Pocket Length [ft] | 125.00 | 100.00 | 100.00 | 125.00 | 100.00 | 100.00 | 100.00 | 100.00 | 100.00 | 100.00 | 100.00 | 100.00 |
| Speed [mph] | 40.00 | | | 40.00 | | | 30.00 | | | 40.00 | | |
| Grade [%] | 0.00 | | | 0.00 | | | 0.00 | | | 0.00 | | |
| Crosswalk | Yes | | | Yes | | | Yes | | | Yes | | |

**volumes**

| Name | Cedar Avenue | | | Cedar Avenue | | | | | | San Bernardino Avenue | | |
|---|---|---|---|---|---|---|---|---|---|---|---|---|
| Base Volume Input [veh/h] | 96 | 677 | 37 | 64 | 1018 | 48 | 39 | 228 | 103 | 87 | 197 | 56 |
| Base Volume Adjustment Factor | 1.0000 | 1.0000 | 1.0000 | 1.0000 | 1.0000 | 1.0000 | 1.0000 | 1.0000 | 1.0000 | 1.0000 | 1.0000 | 1.0000 |
| Heavy Vehicles Percentage [%] | 4.00 | 4.00 | 4.00 | 4.00 | 4.00 | 4.00 | 2.00 | 2.00 | 2.00 | 2.00 | 2.00 | 2.00 |
| Growth Rate | 1.00 | 1.00 | 1.00 | 1.00 | 1.00 | 1.00 | 1.00 | 1.00 | 1.00 | 1.00 | 1.00 | 1.00 |
| In-Process Volume [veh/h] | 0 | 0 | 0 | 0 | 0 | 0 | 0 | 0 | 0 | 0 | 0 | 0 |
| Site-Generated Trips [veh/h] | 0 | 0 | 0 | 0 | 0 | 0 | 0 | 0 | 0 | 0 | 0 | 0 |
| Diverted Trips [veh/h] | 0 | 0 | 0 | 0 | 0 | 0 | 0 | 0 | 0 | 0 | 0 | 0 |
| Pass-by Trips [veh/h] | 0 | 0 | 0 | 0 | 0 | 0 | 0 | 0 | 0 | 0 | 0 | 0 |
| Existing Site Adjustment Volume [veh/h] | 0 | 0 | 0 | 0 | 0 | 0 | 0 | 0 | 0 | 0 | 0 | 0 |
| Other Volume [veh/h] | 0 | 0 | 0 | 0 | 0 | 0 | 0 | 0 | 0 | 0 | 0 | 0 |
| Right-Turn on Red Volume [veh/h] | 0 | 0 | 0 | 0 | 0 | 0 | 0 | 0 | 0 | 0 | 0 | 0 |
| Total Hourly Volume [veh/h] | 96 | 677 | 37 | 64 | 1018 | 48 | 39 | 228 | 103 | 87 | 197 | 56 |
| Peak Hour Factor | 0.8870 | 0.8870 | 0.8870 | 0.8870 | 0.8870 | 0.8870 | 0.8870 | 0.8870 | 0.8870 | 0.8870 | 0.8870 | 0.8870 |
| Other Adjustment Factor | 1.0000 | 1.0000 | 1.0000 | 1.0000 | 1.0000 | 1.0000 | 1.0000 | 1.0000 | 1.0000 | 1.0000 | 1.0000 | 1.0000 |
| Total 15-Minute Volume [veh/h] | 27 | 191 | 10 | 18 | 287 | 14 | 11 | 64 | 29 | 25 | 56 | 16 |
| Total Analysis Volume [veh/h] | 108 | 763 | 42 | 72 | 1148 | 54 | 44 | 257 | 116 | 98 | 222 | 63 |
| Presence of On-Street Parking | No | | No | No | | No | No | | No | No | | No |
| On-Street Parking Maneuver Rate [/h] | 0 | 0 | 0 | 0 | 0 | 0 | 0 | 0 | 0 | 0 | 0 | 0 |
| Local Bus Stopping Rate [/h] | 0 | 0 | 0 | 0 | 0 | 0 | 0 | 0 | 0 | 0 | 0 | 0 |
| Pedestrian Volume [ped/h] | 0 | | | 0 | | | 0 | | | 0 | | |
| Bicycle Volume [bicycles/h] | 0 | | | 0 | | | 0 | | | 0 | | |

**Intersection Settings**

| | |
|---|---|
| Located in CBD | No |
| Signal Coordination Group | 2 - NS - Cedar |
| Cycle Length [s] | 120 |
| Coordination Type | Time of Day Pattern Coordinated |
| Actuation Type | Fully actuated |
| Offset [s] | 0.0 |
| Offset Reference | LagFO |
| Permissive Mode | SingleBand |
| Lost time [s] | 16.00 |

**Phasing & Timing**

| Control Type | Protecte | Permiss | Permiss | Protecte | Permiss | Permiss | Protecte | Permiss | Permiss | Protecte | Permiss | Permiss |
|---|---|---|---|---|---|---|---|---|---|---|---|---|
| Signal group | 5 | 2 | 0 | 1 | 6 | 0 | 3 | 8 | 0 | 7 | 4 | 0 |
| Auxiliary Signal Groups | | | | | | | | | | | | |
| Lead / Lag | Lead | - | - | Lead | - | - | Lead | - | - | Lead | - | - |
| Minimum Green [s] | 5 | 5 | 0 | 5 | 5 | 0 | 5 | 5 | 0 | 5 | 5 | 0 |
| Maximum Green [s] | 30 | 30 | 0 | 30 | 30 | 0 | 30 | 30 | 0 | 30 | 30 | 0 |
| Amber [s] | 4.4 | 4.4 | 0.0 | 4.4 | 4.4 | 0.0 | 3.7 | 3.7 | 0.0 | 4.4 | 4.4 | 0.0 |
| All red [s] | 1.0 | 1.0 | 0.0 | 1.0 | 1.0 | 0.0 | 1.0 | 1.0 | 0.0 | 1.0 | 1.0 | 0.0 |
| Split [s] | 13 | 55 | 0 | 12 | 54 | 0 | 11 | 41 | 0 | 12 | 42 | 0 |
| Vehicle Extension [s] | 3.0 | 3.0 | 0.0 | 3.0 | 3.0 | 0.0 | 3.0 | 3.0 | 0.0 | 3.0 | 3.0 | 0.0 |
| Walk [s] | 0 | 7 | 0 | 0 | 7 | 0 | 0 | 7 | 0 | 0 | 7 | 0 |
| Pedestrian Clearance [s] | 0 | 24 | 0 | 0 | 24 | 0 | 0 | 29 | 0 | 0 | 29 | 0 |
| I1, Start-Up Lost Time [s] | 2.0 | 2.0 | 0.0 | 2.0 | 2.0 | 0.0 | 2.0 | 2.0 | 0.0 | 2.0 | 2.0 | 0.0 |
| I2, Clearance Lost Time [s] | 3.4 | 3.4 | 0.0 | 3.4 | 3.4 | 0.0 | 2.7 | 2.7 | 0.0 | 3.4 | 3.4 | 0.0 |
| Minimum Recall | No | No | | No | No | | No | No | | No | No | |
| Maximum Recall | No | No | | No | No | | No | No | | No | No | |
| Pedestrian Recall | No | No | | No | No | | No | No | | No | No | |
| Detector Location [ft] | 0.0 | 0.0 | 0.0 | 0.0 | 0.0 | 0.0 | 0.0 | 0.0 | 0.0 | 0.0 | 0.0 | 0.0 |
| Detector Length [ft] | 0.0 | 0.0 | 0.0 | 0.0 | 0.0 | 0.0 | 0.0 | 0.0 | 0.0 | 0.0 | 0.0 | 0.0 |
| I, Upstream Filtering Factor | 1.00 | 1.00 | 1.00 | 1.00 | 1.00 | 1.00 | 1.00 | 1.00 | 1.00 | 1.00 | 1.00 | 1.00 |

**Exclusive Pedestrian Phase**

| | |
|---|---|
| Pedestrian Signal Group | 0 |
| Pedestrian Walk [s] | 0 |
| Pedestrian Clearance [s] | 0 |

**Lane Group Calculations**

| Lane Group | L | C | C | L | C | C | L | C | R | L | C | C |
|---|---|---|---|---|---|---|---|---|---|---|---|---|
| L, Total Lost Time per Cycle [s] | 5.40 | 5.40 | 5.40 | 5.40 | 5.40 | 5.40 | 4.70 | 4.70 | 4.70 | 5.40 | 5.40 | 5.40 |
| l1_p, Permitted Start-Up Lost Time [s] | 0.00 | 0.00 | 0.00 | 0.00 | 0.00 | 0.00 | 0.00 | 0.00 | 0.00 | 0.00 | 0.00 | 0.00 |
| l2, Clearance Lost Time [s] | 3.40 | 3.40 | 3.40 | 3.40 | 3.40 | 3.40 | 2.70 | 2.70 | 2.70 | 3.40 | 3.40 | 3.40 |
| g_i, Effective Green Time [s] | 8 | 67 | 67 | 6 | 66 | 66 | 4 | 19 | 19 | 7 | 22 | 22 |
| g / C, Green / Cycle | 0.06 | 0.56 | 0.56 | 0.05 | 0.55 | 0.55 | 0.03 | 0.16 | 0.16 | 0.06 | 0.18 | 0.18 |
| (v / s)_i Volume / Saturation Flow Rate | 0.06 | 0.22 | 0.22 | 0.04 | 0.33 | 0.33 | 0.02 | 0.14 | 0.07 | 0.06 | 0.08 | 0.08 |
| s, saturation flow rate [veh/h] | 1740 | 1827 | 1794 | 1740 | 1827 | 1798 | 1774 | 1863 | 1583 | 1774 | 1863 | 1725 |
| c, Capacity [veh/h] | 111 | 1021 | 1002 | 92 | 1000 | 985 | 58 | 295 | 251 | 99 | 338 | 313 |
| d1, Uniform Delay [s] | 54.80 | 7.99 | 7.99 | 55.12 | 9.92 | 9.93 | 57.58 | 49.31 | 45.87 | 56.67 | 43.66 | 43.77 |
| k, delay calibration | 0.25 | 0.50 | 0.50 | 0.11 | 0.50 | 0.50 | 0.11 | 0.11 | 0.11 | 0.24 | 0.11 | 0.11 |
| I, Upstream Filtering Factor | 1.00 | 1.00 | 1.00 | 1.00 | 1.00 | 1.00 | 1.00 | 1.00 | 1.00 | 1.00 | 1.00 | 1.00 |
| d2, Incremental Delay [s] | 52.60 | 1.16 | 1.18 | 13.35 | 2.71 | 2.77 | 17.50 | 7.78 | 1.32 | 60.01 | 0.87 | 0.99 |
| d3, Initial Queue Delay [s] | 0.00 | 0.00 | 0.00 | 0.00 | 0.00 | 0.00 | 0.00 | 0.00 | 0.00 | 0.00 | 0.00 | 0.00 |
| Rp, platoon ratio | 1.33 | 1.33 | 1.33 | 1.33 | 1.33 | 1.33 | 1.00 | 1.00 | 1.00 | 1.00 | 1.00 | 1.00 |
| PF, progression factor | 1.00 | 1.00 | 1.00 | 1.00 | 1.00 | 1.00 | 1.00 | 1.00 | 1.00 | 1.00 | 1.00 | 1.00 |

**Lane Group Results**

| | | | | | | | | | | | | |
|---|---|---|---|---|---|---|---|---|---|---|---|---|
| X, volume / capacity | 0.97 | 0.40 | 0.40 | 0.78 | 0.61 | 0.61 | 0.75 | 0.87 | 0.46 | 0.99 | 0.43 | 0.44 |
| d, Delay for Lane Group [s/veh] | 107.40 | 9.15 | 9.17 | 68.47 | 12.64 | 12.70 | 75.08 | 57.09 | 47.19 | 116.68 | 44.54 | 44.76 |
| Lane Group LOS | F | A | A | E | B | B | E | E | D | F | D | D |
| Critical Lane Group | Yes | No | No | No | No | Yes | No | Yes | No | Yes | No | No |
| 50th-Percentile Queue Length [veh] | 4.76 | 3.38 | 3.32 | 2.42 | 6.01 | 5.94 | 1.61 | 8.15 | 3.24 | 4.57 | 3.88 | 3.71 |
| 50th-Percentile Queue Length [ft] | 119.02 | 84.42 | 83.04 | 60.56 | 150.32 | 148.56 | 40.24 | 203.63 | 81.10 | 114.23 | 96.96 | 92.71 |
| 95th-Percentile Queue Length [veh] | 8.34 | 6.08 | 5.98 | 4.36 | 10.03 | 9.94 | 2.90 | 12.83 | 5.84 | 8.07 | 6.98 | 6.68 |
| 95th-Percentile Queue Length [ft] | 208.48 | 151.96 | 149.47 | 109.02 | 250.85 | 248.50 | 72.43 | 320.64 | 145.98 | 201.86 | 174.54 | 166.88 |

**Movement, Approach, & Intersection Results**

| | | | | | | | | | | | | |
|---|---|---|---|---|---|---|---|---|---|---|---|---|
| d_M, Delay for Movement [s/veh] | 107.40 | 9.16 | 9.17 | 68.47 | 12.67 | 12.70 | 75.08 | 57.09 | 47.19 | 116.68 | 44.61 | 44.76 |
| Movement LOS | F | A | A | E | B | B | E | E | D | F | D | D |
| d_A, Approach Delay [s/veh] | 20.78 | | | 15.82 | | | 56.24 | | | 63.07 | | |
| Approach LOS | C | | | B | | | E | | | E | | |
| d_I, Intersection Delay [s/veh] | 29.04 | | | | | | | | | | | |
| Intersection LOS | C | | | | | | | | | | | |
| Intersection V/C | 0.677 | | | | | | | | | | | |

## Sequence

| | | | | | | | | | | | | | | | | |
|---|---|---|---|---|---|---|---|---|---|---|---|---|---|---|---|---|
| Ring 1 | 1 | 2 | 3 | 4 | - | - | - | - | - | - | - | - | - | - | - | - |
| Ring 2 | 5 | 6 | 7 | 8 | - | - | - | - | - | - | - | - | - | - | - | - |
| Ring 3 | - | - | - | - | - | - | - | - | - | - | - | - | - | - | - | - |
| Ring 4 | - | - | - | - | - | - | - | - | - | - | - | - | - | - | - | - |

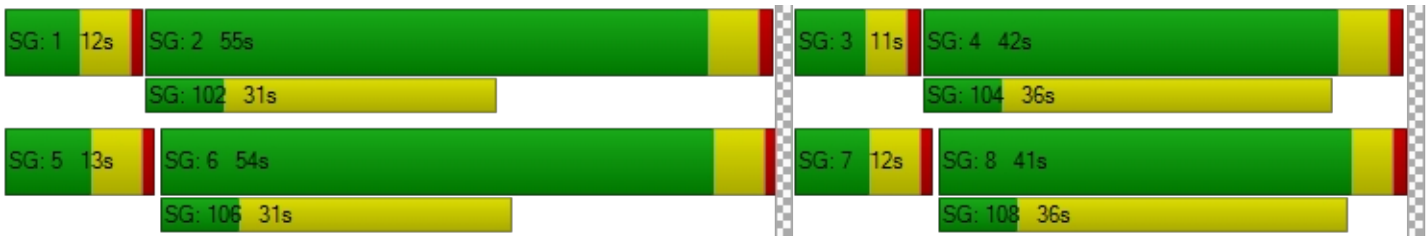

**Intersection Level Of Service Report**
**Intersection 12: Cedar Ave (NS) / Bloomington Ave (EW)**

| | | | |
|---|---|---|---|
| Control Type: | Signalized | Delay (sec / veh): | 19.5 |
| Analysis Method: | HCM 2010 | Level Of Service: | B |
| Analysis Period: | 15 minutes | Volume to Capacity (v/c): | 0.699 |

**Intersection Setup**

| Name | Cedar Avenue | | Cedar Avenue | | Bloomington Avenue | |
|---|---|---|---|---|---|---|
| Approach | Northbound | | Southbound | | Westbound | |
| Lane Configuration | | | | | | |
| Turning Movement | Thru | Right | Left | Thru | Left | Right |
| Lane Width [ft] | 12.00 | 12.00 | 12.00 | 12.00 | 12.00 | 12.00 |
| No. of Lanes in Pocket | 0 | 0 | 1 | 0 | 0 | 1 |
| Pocket Length [ft] | 100.00 | 100.00 | 100.00 | 100.00 | 100.00 | 125.00 |
| Speed [mph] | 40.00 | | 40.00 | | 45.00 | |
| Grade [%] | 0.00 | | 0.00 | | 0.00 | |
| Crosswalk | No | | Yes | | No | |

**volumes**

| Name | Cedar Avenue | | Cedar Avenue | | Bloomington Avenue | |
|---|---|---|---|---|---|---|
| Base Volume Input [veh/h] | 778 | 442 | 61 | 1269 | 782 | 68 |
| Base Volume Adjustment Factor | 1.0000 | 0.0000 | 1.0000 | 1.0000 | 1.0000 | 1.0000 |
| Heavy Vehicles Percentage [%] | 4.00 | 4.00 | 4.00 | 4.00 | 4.00 | 4.00 |
| Growth Rate | 1.00 | 1.00 | 1.00 | 1.00 | 1.00 | 1.00 |
| In-Process Volume [veh/h] | 0 | 0 | 0 | 0 | 0 | 0 |
| Site-Generated Trips [veh/h] | 0 | 0 | 0 | 0 | 0 | 0 |
| Diverted Trips [veh/h] | 0 | 0 | 0 | 0 | 0 | 0 |
| Pass-by Trips [veh/h] | 0 | 0 | 0 | 0 | 0 | 0 |
| Existing Site Adjustment Volume [veh/h] | 0 | 0 | 0 | 0 | 0 | 0 |
| Other Volume [veh/h] | 0 | 0 | 0 | 0 | 0 | 0 |
| Right-Turn on Red Volume [veh/h] | 0 | 0 | 0 | 0 | 0 | 0 |
| Total Hourly Volume [veh/h] | 778 | 0 | 61 | 1269 | 782 | 68 |
| Peak Hour Factor | 0.9480 | 0.9480 | 0.9480 | 0.9480 | 0.9480 | 0.9480 |
| Other Adjustment Factor | 1.0000 | 1.0000 | 1.0000 | 1.0000 | 1.0000 | 1.0000 |
| Total 15-Minute Volume [veh/h] | 205 | 0 | 16 | 335 | 206 | 18 |
| Total Analysis Volume [veh/h] | 821 | 0 | 64 | 1339 | 825 | 72 |
| Presence of On-Street Parking | No | No | No | No | No | No |
| On-Street Parking Maneuver Rate [/h] | 0 | 0 | 0 | 0 | 0 | 0 |
| Local Bus Stopping Rate [/h] | 0 | 0 | 0 | 0 | 0 | 0 |
| Pedestrian Volume [ped/h] | 0 | | 0 | | 0 | |
| Bicycle Volume [bicycles/h] | 0 | | 0 | | 0 | |

**Intersection Settings**

| | |
|---|---|
| Located in CBD | No |
| Signal Coordination Group | 2 - NS - Cedar |
| Cycle Length [s] | 120 |
| Coordination Type | Time of Day Pattern Coordinated |
| Actuation Type | Fully actuated |
| Offset [s] | 59.0 |
| Offset Reference | LagFO |
| Permissive Mode | SingleBand |
| Lost time [s] | 12.00 |

**Phasing & Timing**

| Control Type | Permissive | Permissive | Protected | Permissive | Split | Split |
|---|---|---|---|---|---|---|
| Signal group | 2 | 0 | 1 | 6 | 7 | 0 |
| Auxiliary Signal Groups | | | | | | |
| Lead / Lag | - | - | Lead | - | Lead | - |
| Minimum Green [s] | 5 | 0 | 5 | 5 | 5 | 0 |
| Maximum Green [s] | 30 | 0 | 30 | 30 | 30 | 0 |
| Amber [s] | 4.4 | 0.0 | 4.4 | 4.4 | 4.8 | 0.0 |
| All red [s] | 1.0 | 0.0 | 1.0 | 1.0 | 1.0 | 0.0 |
| Split [s] | 56 | 0 | 19 | 75 | 45 | 0 |
| Vehicle Extension [s] | 3.0 | 0.0 | 3.0 | 3.0 | 3.0 | 0.0 |
| Walk [s] | 7 | 0 | 0 | 7 | 7 | 0 |
| Pedestrian Clearance [s] | 10 | 0 | 0 | 10 | 23 | 0 |
| I1, Start-Up Lost Time [s] | 2.0 | 0.0 | 2.0 | 2.0 | 2.0 | 0.0 |
| I2, Clearance Lost Time [s] | 3.4 | 0.0 | 3.4 | 3.4 | 3.8 | 0.0 |
| Minimum Recall | No | | No | No | No | |
| Maximum Recall | No | | No | No | No | |
| Pedestrian Recall | No | | No | No | No | |
| Detector Location [ft] | 0.0 | 0.0 | 0.0 | 0.0 | 0.0 | 0.0 |
| Detector Length [ft] | 0.0 | 0.0 | 0.0 | 0.0 | 0.0 | 0.0 |
| I, Upstream Filtering Factor | 1.00 | 1.00 | 1.00 | 1.00 | 1.00 | 1.00 |

**Exclusive Pedestrian Phase**

| | |
|---|---|
| Pedestrian Signal Group | 0 |
| Pedestrian Walk [s] | 0 |
| Pedestrian Clearance [s] | 0 |

**Lane Group Calculations**

| Lane Group | C | C | R | L | C | L | R |
|---|---|---|---|---|---|---|---|
| L, Total Lost Time per Cycle [s] | 5.40 | 5.40 | 5.40 | 5.40 | 5.40 | 5.80 | 5.80 |
| l1_p, Permitted Start-Up Lost Time [s] | 0.00 | 0.00 | 0.00 | 0.00 | 0.00 | 0.00 | 0.00 |
| l2, Clearance Lost Time [s] | 3.40 | 3.40 | 3.40 | 3.40 | 3.40 | 3.80 | 3.80 |
| g_i, Effective Green Time [s] | 65 | 65 | 65 | 6 | 76 | 32 | 32 |
| g / C, Green / Cycle | 0.54 | 0.54 | 0.54 | 0.05 | 0.64 | 0.27 | 0.27 |
| (v / s)_i Volume / Saturation Flow Rate | 0.22 | 0.22 | 0.00 | 0.04 | 0.38 | 0.24 | 0.05 |
| s, saturation flow rate [veh/h] | 1827 | 1827 | 1553 | 1740 | 3478 | 3379 | 1553 |
| c, Capacity [veh/h] | 995 | 995 | 846 | 83 | 2216 | 911 | 419 |
| d1, Uniform Delay [s] | 8.92 | 8.92 | 0.00 | 55.55 | 4.35 | 42.34 | 33.56 |
| k, delay calibration | 0.50 | 0.50 | 0.50 | 0.11 | 0.50 | 0.11 | 0.11 |
| I, Upstream Filtering Factor | 1.00 | 1.00 | 1.00 | 1.00 | 1.00 | 1.00 | 1.00 |
| d2, Incremental Delay [s] | 1.26 | 1.26 | 0.00 | 14.24 | 1.23 | 3.77 | 0.19 |
| d3, Initial Queue Delay [s] | 0.00 | 0.00 | 0.00 | 0.00 | 0.00 | 0.00 | 0.00 |
| Rp, platoon ratio | 1.33 | 1.33 | 1.33 | 1.33 | 1.33 | 1.00 | 1.00 |
| PF, progression factor | 1.00 | 1.00 | 1.00 | 1.00 | 1.00 | 1.00 | 1.00 |

**Lane Group Results**

| | | | | | | | |
|---|---|---|---|---|---|---|---|
| X, volume / capacity | 0.41 | 0.41 | 0.00 | 0.78 | 0.60 | 0.91 | 0.17 |
| d, Delay for Lane Group [s/veh] | 10.19 | 10.19 | 0.00 | 69.79 | 5.58 | 46.11 | 33.75 |
| Lane Group LOS | B | B | A | E | A | D | C |
| Critical Lane Group | No | No | No | No | Yes | Yes | No |
| 50th-Percentile Queue Length [veh] | 3.73 | 3.73 | 0.00 | 2.18 | 3.28 | 11.81 | 1.59 |
| 50th-Percentile Queue Length [ft] | 93.15 | 93.15 | 0.00 | 54.56 | 81.94 | 295.35 | 39.77 |
| 95th-Percentile Queue Length [veh] | 6.71 | 6.71 | 0.00 | 3.93 | 5.90 | 17.45 | 2.86 |
| 95th-Percentile Queue Length [ft] | 167.66 | 167.66 | 0.00 | 98.20 | 147.49 | 436.27 | 71.59 |

**Movement, Approach, & Intersection Results**

| | | | | | | |
|---|---|---|---|---|---|---|
| d_M, Delay for Movement [s/veh] | 10.19 | 5.09 | 69.79 | 5.58 | 46.11 | 33.75 |
| Movement LOS | B | A | E | A | D | C |
| d_A, Approach Delay [s/veh] | 10.19 | | 8.51 | | 45.12 | |
| Approach LOS | B | | A | | D | |
| d_I, Intersection Delay [s/veh] | 19.47 | | | | | |
| Intersection LOS | B | | | | | |
| Intersection V/C | 0.699 | | | | | |

## Sequence

| | | | | | | | | | | | | | | | | |
|---|---|---|---|---|---|---|---|---|---|---|---|---|---|---|---|---|
| Ring 1 | 1 | 2 | - | - | - | - | - | - | - | - | - | - | - | - | - | - |
| Ring 2 | - | 6 | 7 | - | - | - | - | - | - | - | - | - | - | - | - | - |
| Ring 3 | - | - | - | - | - | - | - | - | - | - | - | - | - | - | - | - |
| Ring 4 | - | - | - | - | - | - | - | - | - | - | - | - | - | - | - | - |

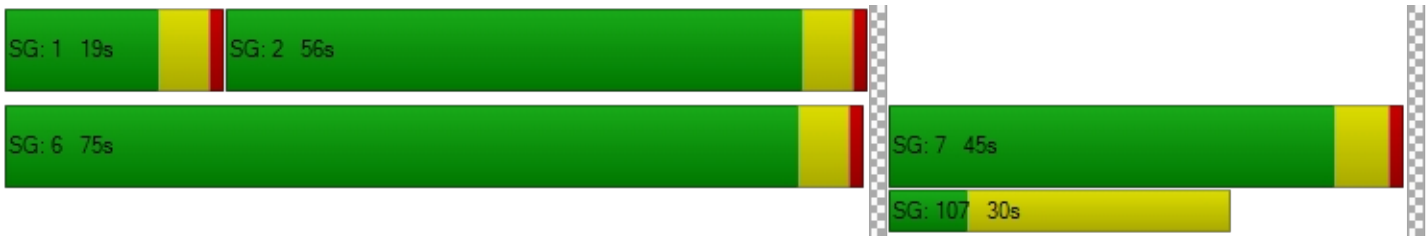

**Intersection Level Of Service Report**
**Intersection 13: Cedar Ave (NS) / Valley Blvd (EW)**

| | | | |
|---|---|---|---|
| Control Type: | Signalized | Delay (sec / veh): | 34.9 |
| Analysis Method: | HCM 2010 | Level Of Service: | C |
| Analysis Period: | 15 minutes | Volume to Capacity (v/c): | 0.881 |

**Intersection Setup**

| Name | Cedar Avenue | | | Cedar Avenue | | | | | | Valley Boulevard | | |
|---|---|---|---|---|---|---|---|---|---|---|---|---|
| Approach | Northbound | | | Southbound | | | Eastbound | | | Westbound | | |
| Lane Configuration | | | | | | | | | | | | |
| Turning Movement | Left | Thru | Right | Left | Thru | Right | Left | Thru | Right | Left | Thru | Right |
| Lane Width [ft] | 12.00 | 12.00 | 12.00 | 12.00 | 12.00 | 12.00 | 12.00 | 12.00 | 12.00 | 12.00 | 12.00 | 12.00 |
| No. of Lanes in Pocket | 2 | 0 | 1 | 2 | 0 | 0 | 2 | 0 | 1 | 2 | 0 | 0 |
| Pocket Length [ft] | 235.00 | 100.00 | 100.00 | 155.00 | 100.00 | 100.00 | 300.00 | 100.00 | 300.00 | 375.00 | 100.00 | 100.00 |
| Speed [mph] | 40.00 | | | 40.00 | | | 30.00 | | | 40.00 | | |
| Grade [%] | 0.00 | | | 0.00 | | | 0.00 | | | 0.00 | | |
| Crosswalk | Yes | | | Yes | | | Yes | | | Yes | | |

**volumes**

| Name | Cedar Avenue | | | Cedar Avenue | | | | | | Valley Boulevard | | |
|---|---|---|---|---|---|---|---|---|---|---|---|---|
| Base Volume Input [veh/h] | 319 | 1200 | 261 | 92 | 1885 | 123 | 88 | 147 | 470 | 403 | 178 | 49 |
| Base Volume Adjustment Factor | 1.0000 | 1.0000 | 1.0000 | 1.0000 | 1.0000 | 1.0000 | 1.0000 | 1.0000 | 1.0000 | 1.0000 | 1.0000 | 1.0000 |
| Heavy Vehicles Percentage [%] | 5.00 | 5.00 | 5.00 | 4.00 | 4.00 | 4.00 | 4.00 | 4.00 | 4.00 | 4.00 | 4.00 | 4.00 |
| Growth Rate | 1.00 | 1.00 | 1.00 | 1.00 | 1.00 | 1.00 | 1.00 | 1.00 | 1.00 | 1.00 | 1.00 | 1.00 |
| In-Process Volume [veh/h] | 0 | 0 | 0 | 0 | 0 | 0 | 0 | 0 | 0 | 0 | 0 | 0 |
| Site-Generated Trips [veh/h] | 0 | 0 | 0 | 0 | 0 | 0 | 0 | 0 | 0 | 0 | 0 | 0 |
| Diverted Trips [veh/h] | 0 | 0 | 0 | 0 | 0 | 0 | 0 | 0 | 0 | 0 | 0 | 0 |
| Pass-by Trips [veh/h] | 0 | 0 | 0 | 0 | 0 | 0 | 0 | 0 | 0 | 0 | 0 | 0 |
| Existing Site Adjustment Volume [veh/h] | 0 | 0 | 0 | 0 | 0 | 0 | 0 | 0 | 0 | 0 | 0 | 0 |
| Other Volume [veh/h] | 0 | 0 | 0 | 0 | 0 | 0 | 0 | 0 | 0 | 0 | 0 | 0 |
| Right-Turn on Red Volume [veh/h] | 0 | 0 | 0 | 0 | 0 | 0 | 0 | 0 | 0 | 0 | 0 | 0 |
| Total Hourly Volume [veh/h] | 319 | 1200 | 261 | 92 | 1885 | 123 | 88 | 147 | 470 | 403 | 178 | 49 |
| Peak Hour Factor | 0.9760 | 0.9760 | 0.9760 | 0.9760 | 0.9760 | 0.9760 | 0.9760 | 0.9760 | 0.9760 | 0.9760 | 0.9760 | 0.9760 |
| Other Adjustment Factor | 1.0000 | 1.0000 | 1.0000 | 1.0000 | 1.0000 | 1.0000 | 1.0000 | 1.0000 | 1.0000 | 1.0000 | 1.0000 | 1.0000 |
| Total 15-Minute Volume [veh/h] | 82 | 307 | 67 | 24 | 483 | 32 | 23 | 38 | 120 | 103 | 46 | 13 |
| Total Analysis Volume [veh/h] | 327 | 1230 | 267 | 94 | 1931 | 126 | 90 | 151 | 482 | 413 | 182 | 50 |
| Presence of On-Street Parking | No | | No | No | | No | No | | No | No | | No |
| On-Street Parking Maneuver Rate [/h] | 0 | 0 | 0 | 0 | 0 | 0 | 0 | 0 | 0 | 0 | 0 | 0 |
| Local Bus Stopping Rate [/h] | 0 | 0 | 0 | 0 | 0 | 0 | 0 | 0 | 0 | 0 | 0 | 0 |
| Pedestrian Volume [ped/h] | 0 | | | 0 | | | 0 | | | 0 | | |
| Bicycle Volume [bicycles/h] | 0 | | | 0 | | | 0 | | | 0 | | |

**Intersection Settings**

| | |
|---|---|
| Located in CBD | No |
| Signal Coordination Group | 2 - NS - Cedar |
| Cycle Length [s] | 120 |
| Coordination Type | Time of Day Pattern Coordinated |
| Actuation Type | Fully actuated |
| Offset [s] | 50.0 |
| Offset Reference | LagFO |
| Permissive Mode | SingleBand |
| Lost time [s] | 16.00 |

**Phasing & Timing**

| Control Type | Protecte | Permiss | Overlap | Protecte | Permiss | Permiss | Protecte | Permiss | Overlap | Protecte | Permiss | Permiss |
|---|---|---|---|---|---|---|---|---|---|---|---|---|
| Signal group | 5 | 2 | 2 | 1 | 6 | 0 | 3 | 8 | 8 | 7 | 4 | 0 |
| Auxiliary Signal Groups | | | 2,7 | | | | | | 5,8 | | | |
| Lead / Lag | Lead | - | - | Lead | - | - | Lead | - | - | Lead | - | - |
| Minimum Green [s] | 5 | 5 | 5 | 5 | 5 | 0 | 5 | 5 | 5 | 5 | 5 | 0 |
| Maximum Green [s] | 30 | 30 | 30 | 30 | 30 | 0 | 30 | 30 | 30 | 30 | 30 | 0 |
| Amber [s] | 4.4 | 4.4 | 4.4 | 4.4 | 4.4 | 0.0 | 3.7 | 3.7 | 3.7 | 4.4 | 4.4 | 0.0 |
| All red [s] | 1.0 | 1.0 | 1.0 | 1.0 | 1.0 | 0.0 | 1.0 | 1.0 | 1.0 | 1.0 | 1.0 | 0.0 |
| Split [s] | 15 | 51 | 51 | 38 | 47 | 0 | 10 | 22 | 22 | 17 | 48 | 0 |
| Vehicle Extension [s] | 3.0 | 3.0 | 3.0 | 3.0 | 3.0 | 0.0 | 3.0 | 3.0 | 3.0 | 3.0 | 3.0 | 0.0 |
| Walk [s] | 0 | 7 | 7 | 0 | 7 | 0 | 0 | 5 | 5 | 0 | 5 | 0 |
| Pedestrian Clearance [s] | 0 | 28 | 28 | 0 | 27 | 0 | 0 | 10 | 10 | 0 | 10 | 0 |
| I1, Start-Up Lost Time [s] | 2.0 | 2.0 | 2.0 | 2.0 | 2.0 | 0.0 | 2.0 | 2.0 | 2.0 | 2.0 | 2.0 | 0.0 |
| I2, Clearance Lost Time [s] | 3.4 | 3.4 | 3.4 | 3.4 | 3.4 | 0.0 | 2.7 | 2.7 | 2.7 | 3.4 | 3.4 | 0.0 |
| Minimum Recall | No | No | No | No | No | | No | No | No | No | No | |
| Maximum Recall | No | No | No | No | No | | No | No | No | No | No | |
| Pedestrian Recall | No | No | No | No | No | | No | No | No | No | No | |
| Detector Location [ft] | 0.0 | 0.0 | 0.0 | 0.0 | 0.0 | 0.0 | 0.0 | 0.0 | 0.0 | 0.0 | 0.0 | 0.0 |
| Detector Length [ft] | 0.0 | 0.0 | 0.0 | 0.0 | 0.0 | 0.0 | 0.0 | 0.0 | 0.0 | 0.0 | 0.0 | 0.0 |
| I, Upstream Filtering Factor | 1.00 | 1.00 | 1.00 | 1.00 | 1.00 | 1.00 | 1.00 | 1.00 | 1.00 | 1.00 | 1.00 | 1.00 |

**Exclusive Pedestrian Phase**

| | |
|---|---|
| Pedestrian Signal Group | 0 |
| Pedestrian Walk [s] | 0 |
| Pedestrian Clearance [s] | 0 |

**Lane Group Calculations**

| Lane Group | L | C | R | L | C | C | L | C | R | L | C | C |
|---|---|---|---|---|---|---|---|---|---|---|---|---|
| L, Total Lost Time per Cycle [s] | 5.40 | 5.40 | 5.40 | 5.40 | 5.40 | 5.40 | 4.70 | 4.70 | 5.40 | 5.40 | 5.40 | 5.40 |
| l1_p, Permitted Start-Up Lost Time [s] | 0.00 | 0.00 | 0.00 | 0.00 | 0.00 | 0.00 | 0.00 | 0.00 | 0.00 | 0.00 | 0.00 | 0.00 |
| l2, Clearance Lost Time [s] | 3.40 | 3.40 | 0.00 | 3.40 | 3.40 | 3.40 | 2.70 | 2.70 | 0.00 | 3.40 | 3.40 | 3.40 |
| g_i, Effective Green Time [s] | 10 | 63 | 86 | 5 | 58 | 58 | 5 | 13 | 28 | 18 | 26 | 26 |
| g / C, Green / Cycle | 0.08 | 0.52 | 0.72 | 0.04 | 0.49 | 0.49 | 0.04 | 0.11 | 0.23 | 0.15 | 0.22 | 0.22 |
| (v / s)_i Volume / Saturation Flow Rate | 0.10 | 0.36 | 0.17 | 0.03 | 0.39 | 0.39 | 0.03 | 0.08 | 0.18 | 0.12 | 0.07 | 0.07 |
| s, saturation flow rate [veh/h] | 3347 | 3445 | 1538 | 3379 | 3478 | 1770 | 3379 | 1827 | 2749 | 3379 | 1827 | 1694 |
| c, Capacity [veh/h] | 270 | 1794 | 1101 | 150 | 1685 | 858 | 140 | 202 | 634 | 507 | 401 | 372 |
| d1, Uniform Delay [s] | 53.59 | 12.62 | 0.81 | 55.51 | 17.10 | 17.19 | 55.85 | 49.56 | 38.59 | 46.43 | 35.32 | 35.34 |
| k, delay calibration | 0.11 | 0.50 | 0.50 | 0.11 | 0.50 | 0.50 | 0.11 | 0.11 | 0.35 | 0.11 | 0.11 | 0.11 |
| I, Upstream Filtering Factor | 1.00 | 1.00 | 1.00 | 1.00 | 1.00 | 1.00 | 1.00 | 1.00 | 1.00 | 1.00 | 1.00 | 1.00 |
| d2, Incremental Delay [s] | 103.07 | 2.16 | 0.52 | 4.23 | 4.25 | 8.28 | 4.85 | 5.40 | 6.01 | 3.25 | 0.41 | 0.45 |
| d3, Initial Queue Delay [s] | 0.00 | 0.00 | 0.00 | 0.00 | 0.00 | 0.00 | 0.00 | 0.00 | 0.00 | 0.00 | 0.00 | 0.00 |
| Rp, platoon ratio | 1.33 | 1.33 | 1.33 | 1.33 | 1.33 | 1.33 | 1.33 | 1.33 | 1.33 | 1.33 | 1.33 | 1.33 |
| PF, progression factor | 1.00 | 1.00 | 1.00 | 1.00 | 1.00 | 1.00 | 1.00 | 1.00 | 1.00 | 1.00 | 1.00 | 1.00 |

**Lane Group Results**

| | | | | | | | | | | | | |
|---|---|---|---|---|---|---|---|---|---|---|---|---|
| X, volume / capacity | 1.21 | 0.69 | 0.24 | 0.63 | 0.81 | 0.81 | 0.64 | 0.75 | 0.76 | 0.81 | 0.30 | 0.30 |
| d, Delay for Lane Group [s/veh] | 156.66 | 14.78 | 1.33 | 59.74 | 21.35 | 25.47 | 60.70 | 54.95 | 44.60 | 49.68 | 35.74 | 35.80 |
| Lane Group LOS | F | B | A | E | C | C | E | D | D | D | D | D |
| Critical Lane Group | Yes | No | No | No | No | Yes | No | No | Yes | Yes | No | No |
| 50th-Percentile Queue Length [veh] | 7.75 | 7.24 | 0.43 | 1.45 | 11.39 | 12.71 | 1.42 | 4.51 | 6.59 | 5.72 | 2.67 | 2.50 |
| 50th-Percentile Queue Length [ft] | 193.63 | 180.93 | 10.65 | 36.15 | 284.83 | 317.83 | 35.49 | 112.82 | 164.79 | 143.04 | 66.72 | 62.49 |
| 95th-Percentile Queue Length [veh] | 13.10 | 11.65 | 0.77 | 2.60 | 16.93 | 18.56 | 2.56 | 8.00 | 10.80 | 9.64 | 4.80 | 4.50 |
| 95th-Percentile Queue Length [ft] | 327.41 | 291.23 | 19.16 | 65.07 | 423.22 | 464.01 | 63.88 | 199.91 | 270.06 | 241.12 | 120.09 | 112.48 |

**Movement, Approach, & Intersection Results**

| | | | | | | | | | | | | |
|---|---|---|---|---|---|---|---|---|---|---|---|---|
| d_M, Delay for Movement [s/veh] | 156.66 | 14.78 | 1.33 | 59.74 | 22.57 | 25.47 | 60.70 | 54.95 | 44.60 | 49.68 | 35.76 | 35.80 |
| Movement LOS | F | B | A | E | C | C | E | D | D | D | D | D |
| d_A, Approach Delay [s/veh] | 38.24 | | | 24.36 | | | 48.77 | | | 44.68 | | |
| Approach LOS | D | | | C | | | D | | | D | | |
| d_I, Intersection Delay [s/veh] | 34.86 | | | | | | | | | | | |
| Intersection LOS | C | | | | | | | | | | | |
| Intersection V/C | 0.881 | | | | | | | | | | | |

## Sequence

| | | | | | | | | | | | | | | | | |
|---|---|---|---|---|---|---|---|---|---|---|---|---|---|---|---|---|
| Ring 1 | 1 | 2 | 3 | 4 | - | - | - | - | - | - | - | - | - | - | - | - |
| Ring 2 | 5 | 6 | 7 | 8 | - | - | - | - | - | - | - | - | - | - | - | - |
| Ring 3 | - | - | - | - | - | - | - | - | - | - | - | - | - | - | - | - |
| Ring 4 | - | - | - | - | - | - | - | - | - | - | - | - | - | - | - | - |

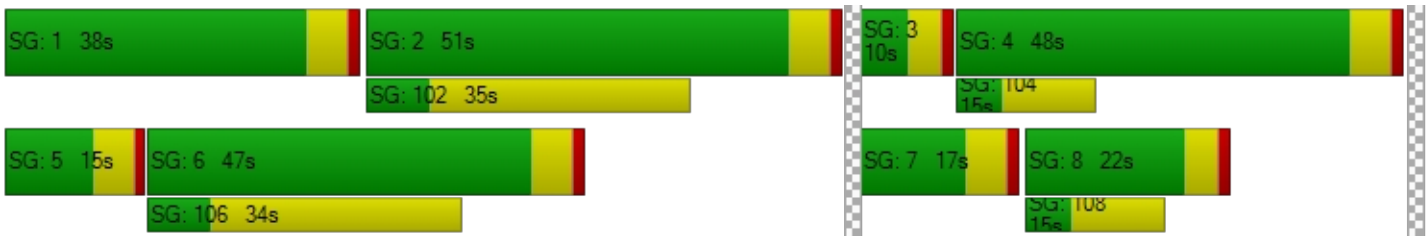

**Intersection Level Of Service Report**
**Intersection 14: Cedar Ave (NS) / I-10 Westbound Ramps (EW)**

| | | | |
|---|---|---|---|
| Control Type: | Signalized | Delay (sec / veh): | 134.4 |
| Analysis Method: | HCM 2010 | Level Of Service: | F |
| Analysis Period: | 15 minutes | Volume to Capacity (v/c): | 1.484 |

**Intersection Setup**

| Name | Cedar Avenue | | | Cedar Avenue | | | | | | I-10 Westbound Ramps | | |
|---|---|---|---|---|---|---|---|---|---|---|---|---|
| Approach | Northbound | | | Southbound | | | Eastbound | | | Westbound | | |
| Lane Configuration | | | | | | | | | | | | |
| Turning Movement | Left | Thru | Right | Left | Thru | Right | Left | Thru | Right | Left | Thru | Right |
| Lane Width [ft] | 12.00 | 12.00 | 12.00 | 12.00 | 12.00 | 12.00 | 12.00 | 12.00 | 12.00 | 12.00 | 12.00 | 12.00 |
| No. of Lanes in Pocket | 1 | 0 | 0 | 0 | 0 | 1 | 0 | 0 | 0 | 0 | 0 | 1 |
| Pocket Length [ft] | 305.00 | 100.00 | 100.00 | 100.00 | 100.00 | 100.00 | 100.00 | 100.00 | 100.00 | 100.00 | 100.00 | 485.00 |
| Speed [mph] | 40.00 | | | 40.00 | | | 30.00 | | | 30.00 | | |
| Grade [%] | 0.00 | | | 0.00 | | | 0.00 | | | 0.00 | | |
| Crosswalk | No | | | No | | | Yes | | | Yes | | |

**volumes**

| Name | Cedar Avenue | | | Cedar Avenue | | | | | | I-10 Westbound Ramps | | |
|---|---|---|---|---|---|---|---|---|---|---|---|---|
| Base Volume Input [veh/h] | 368 | 1252 | 0 | 0 | 1600 | 1150 | 0 | 0 | 0 | 368 | 1 | 511 |
| Base Volume Adjustment Factor | 1.0000 | 1.0000 | 1.0000 | 1.0000 | 1.0000 | 1.0000 | 1.0000 | 1.0000 | 1.0000 | 1.0000 | 1.0000 | 1.0000 |
| Heavy Vehicles Percentage [%] | 5.00 | 5.00 | 2.00 | 2.00 | 5.00 | 5.00 | 2.00 | 2.00 | 2.00 | 6.00 | 6.00 | 6.00 |
| Growth Rate | 1.00 | 1.00 | 1.00 | 1.00 | 1.00 | 1.00 | 1.00 | 1.00 | 1.00 | 1.00 | 1.00 | 1.00 |
| In-Process Volume [veh/h] | 0 | 0 | 0 | 0 | 0 | 0 | 0 | 0 | 0 | 0 | 0 | 0 |
| Site-Generated Trips [veh/h] | 0 | 0 | 0 | 0 | 0 | 0 | 0 | 0 | 0 | 0 | 0 | 0 |
| Diverted Trips [veh/h] | 0 | 0 | 0 | 0 | 0 | 0 | 0 | 0 | 0 | 0 | 0 | 0 |
| Pass-by Trips [veh/h] | 0 | 0 | 0 | 0 | 0 | 0 | 0 | 0 | 0 | 0 | 0 | 0 |
| Existing Site Adjustment Volume [veh/h] | 0 | 0 | 0 | 0 | 0 | 0 | 0 | 0 | 0 | 0 | 0 | 0 |
| Other Volume [veh/h] | 0 | 0 | 0 | 0 | 0 | 0 | 0 | 0 | 0 | 0 | 0 | 0 |
| Right-Turn on Red Volume [veh/h] | 0 | 0 | 0 | 0 | 0 | 0 | 0 | 0 | 0 | 0 | 0 | 0 |
| Total Hourly Volume [veh/h] | 368 | 1252 | 0 | 0 | 1600 | 1150 | 0 | 0 | 0 | 368 | 1 | 511 |
| Peak Hour Factor | 0.9350 | 0.9350 | 1.0000 | 1.0000 | 0.9350 | 0.9350 | 1.0000 | 1.0000 | 1.0000 | 0.9350 | 0.9350 | 0.9350 |
| Other Adjustment Factor | 1.0000 | 1.0000 | 1.0000 | 1.0000 | 1.0000 | 1.0000 | 1.0000 | 1.0000 | 1.0000 | 1.0000 | 1.0000 | 1.0000 |
| Total 15-Minute Volume [veh/h] | 98 | 335 | 0 | 0 | 428 | 307 | 0 | 0 | 0 | 98 | 0 | 137 |
| Total Analysis Volume [veh/h] | 394 | 1339 | 0 | 0 | 1711 | 1230 | 0 | 0 | 0 | 394 | 1 | 547 |
| Presence of On-Street Parking | No | | No | No | | No | | | | No | | No |
| On-Street Parking Maneuver Rate [/h] | 0 | 0 | 0 | 0 | 0 | 0 | 0 | 0 | 0 | 0 | 0 | 0 |
| Local Bus Stopping Rate [/h] | 0 | 0 | 0 | 0 | 0 | 0 | 0 | 0 | 0 | 0 | 0 | 0 |
| Pedestrian Volume [ped/h] | 0 | | | 0 | | | 0 | | | 0 | | |
| Bicycle Volume [bicycles/h] | 0 | | | 0 | | | 0 | | | 0 | | |

**Intersection Settings**

| | |
|---|---|
| Located in CBD | No |
| Signal Coordination Group | 2 - NS - Cedar |
| Cycle Length [s] | 120 |
| Coordination Type | Time of Day Pattern Coordinated |
| Actuation Type | Fully actuated |
| Offset [s] | 59.0 |
| Offset Reference | LagFO |
| Permissive Mode | SingleBand |
| Lost time [s] | 12.00 |

**Phasing & Timing**

| Control Type | Protecte | Permiss | Permiss | Permiss | Permiss | Permiss | Permiss | Permiss | Permiss | Permiss | Permiss | Permiss |
|---|---|---|---|---|---|---|---|---|---|---|---|---|
| Signal group | 5 | 2 | 0 | 0 | 6 | 0 | 0 | 0 | 0 | 0 | 4 | 0 |
| Auxiliary Signal Groups | | | | | | | | | | | | |
| Lead / Lag | Lead | - | - | - | - | - | - | - | - | - | - | - |
| Minimum Green [s] | 5 | 5 | 0 | 0 | 5 | 0 | 0 | 0 | 0 | 0 | 5 | 0 |
| Maximum Green [s] | 30 | 30 | 0 | 0 | 30 | 0 | 0 | 0 | 0 | 0 | 30 | 0 |
| Amber [s] | 4.4 | 4.4 | 0.0 | 0.0 | 4.4 | 0.0 | 0.0 | 0.0 | 0.0 | 0.0 | 3.7 | 0.0 |
| All red [s] | 1.0 | 1.0 | 0.0 | 0.0 | 1.0 | 0.0 | 0.0 | 0.0 | 0.0 | 0.0 | 1.0 | 0.0 |
| Split [s] | 23 | 86 | 0 | 0 | 63 | 0 | 0 | 0 | 0 | 0 | 34 | 0 |
| Vehicle Extension [s] | 3.0 | 3.0 | 0.0 | 0.0 | 3.0 | 0.0 | 0.0 | 0.0 | 0.0 | 0.0 | 3.0 | 0.0 |
| Walk [s] | 0 | 7 | 0 | 0 | 7 | 0 | 0 | 0 | 0 | 0 | 7 | 0 |
| Pedestrian Clearance [s] | 0 | 17 | 0 | 0 | 17 | 0 | 0 | 0 | 0 | 0 | 10 | 0 |
| I1, Start-Up Lost Time [s] | 2.0 | 2.0 | 0.0 | 0.0 | 2.0 | 0.0 | 0.0 | 0.0 | 0.0 | 0.0 | 2.0 | 0.0 |
| I2, Clearance Lost Time [s] | 3.4 | 3.4 | 0.0 | 0.0 | 3.4 | 0.0 | 0.0 | 0.0 | 0.0 | 0.0 | 2.7 | 0.0 |
| Minimum Recall | No | No | | | No | | | | | | No | |
| Maximum Recall | No | No | | | No | | | | | | No | |
| Pedestrian Recall | No | No | | | No | | | | | | No | |
| Detector Location [ft] | 0.0 | 0.0 | 0.0 | 0.0 | 0.0 | 0.0 | 0.0 | 0.0 | 0.0 | 0.0 | 0.0 | 0.0 |
| Detector Length [ft] | 0.0 | 0.0 | 0.0 | 0.0 | 0.0 | 0.0 | 0.0 | 0.0 | 0.0 | 0.0 | 0.0 | 0.0 |
| I, Upstream Filtering Factor | 1.00 | 1.00 | 1.00 | 1.00 | 1.00 | 1.00 | 1.00 | 1.00 | 1.00 | 1.00 | 1.00 | 1.00 |

**Exclusive Pedestrian Phase**

| | |
|---|---|
| Pedestrian Signal Group | 0 |
| Pedestrian Walk [s] | 0 |
| Pedestrian Clearance [s] | 0 |

**Lane Group Calculations**

| Lane Group | L | C | C | R | | C | R |
|---|---|---|---|---|---|---|---|
| L, Total Lost Time per Cycle [s] | 5.40 | 5.40 | 5.40 | 5.40 | | 4.70 | 4.70 |
| l1_p, Permitted Start-Up Lost Time [s] | 0.00 | 0.00 | 0.00 | 0.00 | | 0.00 | 0.00 |
| l2, Clearance Lost Time [s] | 3.40 | 3.40 | 3.40 | 3.40 | | 2.70 | 2.70 |
| g_i, Effective Green Time [s] | 18 | 81 | 58 | 58 | | 29 | 29 |
| g / C, Green / Cycle | 0.15 | 0.67 | 0.48 | 0.48 | | 0.24 | 0.24 |
| (v / s)_i Volume / Saturation Flow Rate | 0.23 | 0.39 | 0.35 | 0.80 | | 0.28 | 0.31 |
| s, saturation flow rate [veh/h] | 1723 | 3445 | 4929 | 1538 | | 1674 | 1524 |
| c, Capacity [veh/h] | 254 | 2314 | 2363 | 737 | | 409 | 372 |
| d1, Uniform Delay [s] | 51.15 | 10.59 | 24.90 | 31.23 | | 45.32 | 45.32 |
| k, delay calibration | 0.50 | 0.50 | 0.50 | 0.50 | | 0.50 | 0.50 |
| I, Upstream Filtering Factor | 1.00 | 1.00 | 1.00 | 1.00 | | 1.00 | 1.00 |
| d2, Incremental Delay [s] | 267.74 | 1.06 | 1.97 | 306.74 | | 95.68 | 135.91 |
| d3, Initial Queue Delay [s] | 0.00 | 0.00 | 0.00 | 0.00 | | 0.00 | 0.00 |
| Rp, platoon ratio | 1.00 | 1.00 | 1.00 | 1.00 | | 1.00 | 1.00 |
| PF, progression factor | 1.00 | 1.00 | 1.00 | 1.00 | | 1.00 | 1.00 |

**Lane Group Results**

| | | | | | | | |
|---|---|---|---|---|---|---|---|
| X, volume / capacity | 1.55 | 0.58 | 0.72 | 1.67 | | 1.16 | 1.26 |
| d, Delay for Lane Group [s/veh] | 318.89 | 11.65 | 26.87 | 337.96 | | 141.00 | 181.23 |
| Lane Group LOS | F | B | C | F | | F | F |
| Critical Lane Group | Yes | No | No | Yes | | No | Yes |
| 50th-Percentile Queue Length [veh] | 26.32 | 8.67 | 12.66 | 82.64 | | 22.93 | 25.04 |
| 50th-Percentile Queue Length [ft] | 657.99 | 216.80 | 316.58 | 2066.12 | | 573.37 | 625.92 |
| 95th-Percentile Queue Length [veh] | 41.06 | 13.50 | 18.50 | 129.86 | | 33.44 | 37.52 |
| 95th-Percentile Queue Length [ft] | 1026.41 | 337.54 | 462.48 | 3246.48 | | 836.09 | 937.90 |

**Movement, Approach, & Intersection Results**

| | | | | | | | | | | | | |
|---|---|---|---|---|---|---|---|---|---|---|---|---|
| d_M, Delay for Movement [s/veh] | 318.89 | 11.65 | 0.00 | 0.00 | 26.87 | 337.96 | 0.00 | 0.00 | 0.00 | 141.00 | 141.00 | 175.58 |
| Movement LOS | F | B | | | C | F | | | | F | F | F |
| d_A, Approach Delay [s/veh] | 81.50 | | | 156.98 | | | 0.00 | | | 160.99 | | |
| Approach LOS | F | | | F | | | A | | | F | | |
| d_I, Intersection Delay [s/veh] | 134.36 | | | | | | | | | | | |
| Intersection LOS | F | | | | | | | | | | | |
| Intersection V/C | 1.484 | | | | | | | | | | | |

## Sequence

| | | | | | | | | | | | | | | | | |
|---|---|---|---|---|---|---|---|---|---|---|---|---|---|---|---|---|
| Ring 1 | - | 2 | 4 | - | - | - | - | - | - | - | - | - | - | - | - | - |
| Ring 2 | 5 | 6 | - | - | - | - | - | - | - | - | - | - | - | - | - | - |
| Ring 3 | - | - | - | - | - | - | - | - | - | - | - | - | - | - | - | - |
| Ring 4 | - | - | - | - | - | - | - | - | - | - | - | - | - | - | - | - |

**Intersection Level Of Service Report**
**Intersection 15: Cedar Ave (NS) / I-10 Eastbound Ramps (EW)**

| | | | |
|---|---|---|---|
| Control Type: | Signalized | Delay (sec / veh): | 70.7 |
| Analysis Method: | HCM 2010 | Level Of Service: | E |
| Analysis Period: | 15 minutes | Volume to Capacity (v/c): | 1.089 |

**Intersection Setup**

| Name | Cedar Avenue | | | Cedar Avenue | | | | | | I-10 Eastbound Ramps | | |
|---|---|---|---|---|---|---|---|---|---|---|---|---|
| Approach | Northbound | | | Southbound | | | Eastbound | | | Westbound | | |
| Lane Configuration | | | | | | | | | | | | |
| Turning Movement | Left | Thru | Right | Left | Thru | Right | Left | Thru | Right | Left | Thru | Right |
| Lane Width [ft] | 12.00 | 12.00 | 12.00 | 12.00 | 12.00 | 12.00 | 12.00 | 12.00 | 12.00 | 12.00 | 12.00 | 12.00 |
| No. of Lanes in Pocket | 0 | 0 | 1 | 1 | 0 | 0 | 1 | 0 | 0 | 0 | 0 | 0 |
| Pocket Length [ft] | 100.00 | 100.00 | 555.00 | 305.00 | 100.00 | 100.00 | 340.00 | 100.00 | 100.00 | 100.00 | 100.00 | 100.00 |
| Speed [mph] | 40.00 | | | 40.00 | | | 30.00 | | | 30.00 | | |
| Grade [%] | 0.00 | | | 0.00 | | | 0.00 | | | 0.00 | | |
| Crosswalk | No | | | No | | | Yes | | | Yes | | |

**volumes**

| Name | Cedar Avenue | | | Cedar Avenue | | | | | | I-10 Eastbound Ramps | | |
|---|---|---|---|---|---|---|---|---|---|---|---|---|
| Base Volume Input [veh/h] | 0 | 1018 | 372 | 604 | 1366 | 0 | 616 | 3 | 361 | 0 | 0 | 0 |
| Base Volume Adjustment Factor | 1.0000 | 1.0000 | 1.0000 | 1.0000 | 1.0000 | 1.0000 | 1.0000 | 1.0000 | 1.0000 | 1.0000 | 1.0000 | 1.0000 |
| Heavy Vehicles Percentage [%] | 2.00 | 5.00 | 5.00 | 5.00 | 5.00 | 2.00 | 6.00 | 6.00 | 6.00 | 2.00 | 2.00 | 2.00 |
| Growth Rate | 1.00 | 1.00 | 1.00 | 1.00 | 1.00 | 1.00 | 1.00 | 1.00 | 1.00 | 1.00 | 1.00 | 1.00 |
| In-Process Volume [veh/h] | 0 | 0 | 0 | 0 | 0 | 0 | 0 | 0 | 0 | 0 | 0 | 0 |
| Site-Generated Trips [veh/h] | 0 | 0 | 0 | 0 | 0 | 0 | 0 | 0 | 0 | 0 | 0 | 0 |
| Diverted Trips [veh/h] | 0 | 0 | 0 | 0 | 0 | 0 | 0 | 0 | 0 | 0 | 0 | 0 |
| Pass-by Trips [veh/h] | 0 | 0 | 0 | 0 | 0 | 0 | 0 | 0 | 0 | 0 | 0 | 0 |
| Existing Site Adjustment Volume [veh/h] | 0 | 0 | 0 | 0 | 0 | 0 | 0 | 0 | 0 | 0 | 0 | 0 |
| Other Volume [veh/h] | 0 | 0 | 0 | 0 | 0 | 0 | 0 | 0 | 0 | 0 | 0 | 0 |
| Right-Turn on Red Volume [veh/h] | 0 | 0 | 0 | 0 | 0 | 0 | 0 | 0 | 0 | 0 | 0 | 0 |
| Total Hourly Volume [veh/h] | 0 | 1018 | 372 | 604 | 1366 | 0 | 616 | 3 | 361 | 0 | 0 | 0 |
| Peak Hour Factor | 1.0000 | 0.9240 | 0.9240 | 0.9240 | 0.9240 | 1.0000 | 0.9240 | 0.9240 | 0.9240 | 1.0000 | 1.0000 | 1.0000 |
| Other Adjustment Factor | 1.0000 | 1.0000 | 1.0000 | 1.0000 | 1.0000 | 1.0000 | 1.0000 | 1.0000 | 1.0000 | 1.0000 | 1.0000 | 1.0000 |
| Total 15-Minute Volume [veh/h] | 0 | 275 | 101 | 163 | 370 | 0 | 167 | 1 | 98 | 0 | 0 | 0 |
| Total Analysis Volume [veh/h] | 0 | 1102 | 403 | 654 | 1478 | 0 | 667 | 3 | 391 | 0 | 0 | 0 |
| Presence of On-Street Parking | No | | No | No | | No | No | | No | | | |
| On-Street Parking Maneuver Rate [/h] | 0 | 0 | 0 | 0 | 0 | 0 | 0 | 0 | 0 | 0 | 0 | 0 |
| Local Bus Stopping Rate [/h] | 0 | 0 | 0 | 0 | 0 | 0 | 0 | 0 | 0 | 0 | 0 | 0 |
| Pedestrian Volume [ped/h] | 0 | | | 0 | | | 0 | | | 0 | | |
| Bicycle Volume [bicycles/h] | 0 | | | 0 | | | 0 | | | 0 | | |

**Intersection Settings**

| | |
|---|---|
| Located in CBD | No |
| Signal Coordination Group | 2 - NS - Cedar |
| Cycle Length [s] | 120 |
| Coordination Type | Time of Day Pattern Coordinated |
| Actuation Type | Fully actuated |
| Offset [s] | 65.0 |
| Offset Reference | LagFO |
| Permissive Mode | SingleBand |
| Lost time [s] | 12.00 |

**Phasing & Timing**

| Control Type | Permiss | Permiss | Permiss | Protecte | Permiss | Permiss | Permiss | Permiss | Permiss | Permiss | Permiss | Permiss |
|---|---|---|---|---|---|---|---|---|---|---|---|---|
| Signal group | 0 | 2 | 0 | 1 | 6 | 0 | 0 | 8 | 0 | 0 | 0 | 0 |
| Auxiliary Signal Groups | | | | | | | | | | | | |
| Lead / Lag | - | - | - | Lead | - | - | - | - | - | - | - | - |
| Minimum Green [s] | 0 | 5 | 0 | 5 | 5 | 0 | 0 | 5 | 0 | 0 | 0 | 0 |
| Maximum Green [s] | 0 | 30 | 0 | 30 | 30 | 0 | 0 | 30 | 0 | 0 | 0 | 0 |
| Amber [s] | 0.0 | 4.4 | 0.0 | 4.4 | 4.4 | 0.0 | 0.0 | 3.7 | 0.0 | 0.0 | 0.0 | 0.0 |
| All red [s] | 0.0 | 1.0 | 0.0 | 1.0 | 1.0 | 0.0 | 0.0 | 1.0 | 0.0 | 0.0 | 0.0 | 0.0 |
| Split [s] | 0 | 34 | 0 | 43 | 77 | 0 | 0 | 43 | 0 | 0 | 0 | 0 |
| Vehicle Extension [s] | 0.0 | 3.0 | 0.0 | 3.0 | 3.0 | 0.0 | 0.0 | 3.0 | 0.0 | 0.0 | 0.0 | 0.0 |
| Walk [s] | 0 | 7 | 0 | 0 | 7 | 0 | 0 | 7 | 0 | 0 | 0 | 0 |
| Pedestrian Clearance [s] | 0 | 21 | 0 | 0 | 16 | 0 | 0 | 10 | 0 | 0 | 0 | 0 |
| I1, Start-Up Lost Time [s] | 0.0 | 2.0 | 0.0 | 2.0 | 2.0 | 0.0 | 0.0 | 2.0 | 0.0 | 0.0 | 0.0 | 0.0 |
| I2, Clearance Lost Time [s] | 0.0 | 3.4 | 0.0 | 3.4 | 3.4 | 0.0 | 0.0 | 2.7 | 0.0 | 0.0 | 0.0 | 0.0 |
| Minimum Recall | | No | | No | No | | | No | | | | |
| Maximum Recall | | No | | No | No | | | No | | | | |
| Pedestrian Recall | | No | | No | No | | | No | | | | |
| Detector Location [ft] | 0.0 | 0.0 | 0.0 | 0.0 | 0.0 | 0.0 | 0.0 | 0.0 | 0.0 | 0.0 | 0.0 | 0.0 |
| Detector Length [ft] | 0.0 | 0.0 | 0.0 | 0.0 | 0.0 | 0.0 | 0.0 | 0.0 | 0.0 | 0.0 | 0.0 | 0.0 |
| I, Upstream Filtering Factor | 1.00 | 1.00 | 1.00 | 1.00 | 1.00 | 1.00 | 1.00 | 1.00 | 1.00 | 1.00 | 1.00 | 1.00 |

**Exclusive Pedestrian Phase**

| | |
|---|---|
| Pedestrian Signal Group | 0 |
| Pedestrian Walk [s] | 0 |
| Pedestrian Clearance [s] | 0 |

**Lane Group Calculations**

| Lane Group | C | R | L | C | L | C | |
|---|---|---|---|---|---|---|---|
| L, Total Lost Time per Cycle [s] | 5.40 | 5.40 | 5.40 | 5.40 | 4.70 | 4.70 | |
| l1_p, Permitted Start-Up Lost Time [s] | 0.00 | 0.00 | 0.00 | 0.00 | 0.00 | 0.00 | |
| l2, Clearance Lost Time [s] | 3.40 | 3.40 | 3.40 | 3.40 | 2.70 | 2.70 | |
| g_i, Effective Green Time [s] | 29 | 29 | 38 | 72 | 38 | 38 | |
| g / C, Green / Cycle | 0.24 | 0.24 | 0.31 | 0.60 | 0.32 | 0.32 | |
| (v / s)_i Volume / Saturation Flow Rate | 0.22 | 0.26 | 0.38 | 0.43 | 0.31 | 0.34 | |
| s, saturation flow rate [veh/h] | 4929 | 1538 | 1723 | 3445 | 1707 | 1568 | |
| c, Capacity [veh/h] | 1177 | 367 | 540 | 2056 | 544 | 500 | |
| d1, Uniform Delay [s] | 44.76 | 45.65 | 41.20 | 17.07 | 40.36 | 40.85 | |
| k, delay calibration | 0.50 | 0.50 | 0.50 | 0.50 | 0.43 | 0.49 | |
| I, Upstream Filtering Factor | 1.00 | 1.00 | 1.00 | 1.00 | 1.00 | 1.00 | |
| d2, Incremental Delay [s] | 14.82 | 75.75 | 111.73 | 2.20 | 29.97 | 56.97 | |
| d3, Initial Queue Delay [s] | 0.00 | 0.00 | 0.00 | 0.00 | 0.00 | 0.00 | |
| Rp, platoon ratio | 1.00 | 1.00 | 1.00 | 1.00 | 1.00 | 1.00 | |
| PF, progression factor | 1.00 | 1.00 | 1.00 | 1.00 | 1.00 | 1.00 | |

**Lane Group Results**

| | | | | | | | |
|---|---|---|---|---|---|---|---|
| X, volume / capacity | 0.94 | 1.10 | 1.21 | 0.72 | 0.97 | 1.06 | |
| d, Delay for Lane Group [s/veh] | 59.58 | 121.40 | 152.92 | 19.27 | 70.34 | 97.82 | |
| Lane Group LOS | E | F | F | B | E | F | |
| Critical Lane Group | No | Yes | Yes | No | No | Yes | |
| 50th-Percentile Queue Length [veh] | 12.04 | 18.36 | 32.10 | 13.70 | 19.78 | 22.46 | |
| 50th-Percentile Queue Length [ft] | 301.04 | 459.00 | 802.54 | 342.48 | 494.50 | 561.53 | |
| 95th-Percentile Queue Length [veh] | 17.73 | 26.75 | 46.51 | 19.77 | 27.07 | 31.42 | |
| 95th-Percentile Queue Length [ft] | 443.31 | 668.86 | 1162.63 | 494.23 | 676.84 | 785.59 | |

**Movement, Approach, & Intersection Results**

| | | | | | | | | | | | | |
|---|---|---|---|---|---|---|---|---|---|---|---|---|
| d_M, Delay for Movement [s/veh] | 0.00 | 59.58 | 121.40 | 152.92 | 19.27 | 0.00 | 75.96 | 97.82 | 97.82 | 0.00 | 0.00 | 0.00 |
| Movement LOS | | E | F | F | B | | E | F | F | | | |
| d_A, Approach Delay [s/veh] | 76.14 | | | 60.27 | | | 84.08 | | | 0.00 | | |
| Approach LOS | E | | | E | | | F | | | A | | |
| d_I, Intersection Delay [s/veh] | 70.73 | | | | | | | | | | | |
| Intersection LOS | E | | | | | | | | | | | |
| Intersection V/C | 1.089 | | | | | | | | | | | |

## Sequence

| | | | | | | | | | | | | | | | | |
|---|---|---|---|---|---|---|---|---|---|---|---|---|---|---|---|---|
| Ring 1 | 1 | 2 | - | - | - | - | - | - | - | - | - | - | - | - | - | - |
| Ring 2 | - | 6 | 8 | - | - | - | - | - | - | - | - | - | - | - | - | - |
| Ring 3 | - | - | - | - | - | - | - | - | - | - | - | - | - | - | - | - |
| Ring 4 | - | - | - | - | - | - | - | - | - | - | - | - | - | - | - | - |

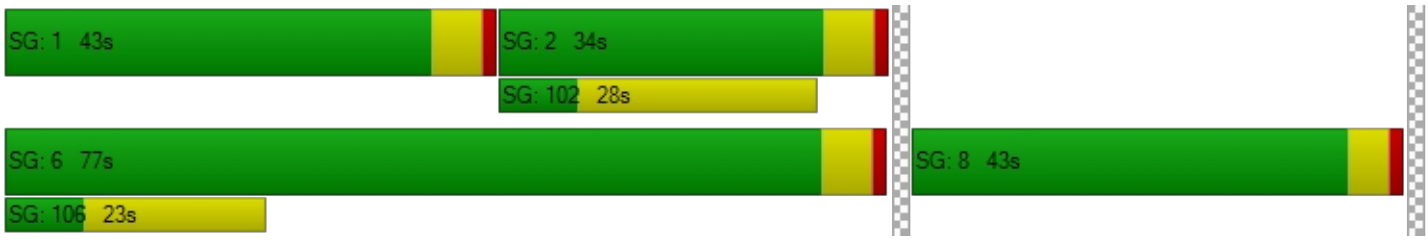

**Intersection Level Of Service Report**
**Intersection 16: Cedar Ave (NS) / Slover Ave (EW)**

| | | | |
|---|---|---|---|
| Control Type: | Signalized | Delay (sec / veh): | 34.4 |
| Analysis Method: | HCM 2010 | Level Of Service: | C |
| Analysis Period: | 15 minutes | Volume to Capacity (v/c): | 0.756 |

**Intersection Setup**

| Name | Cedar Avenue | | | Cedar Avenue | | | Slover Avenue | | | Slover Avenue | | |
|---|---|---|---|---|---|---|---|---|---|---|---|---|
| Approach | Northbound | | | Southbound | | | Eastbound | | | Westbound | | |
| Lane Configuration | | | | | | | | | | | | |
| Turning Movement | Left | Thru | Right | Left | Thru | Right | Left | Thru | Right | Left | Thru | Right |
| Lane Width [ft] | 12.00 | 12.00 | 12.00 | 12.00 | 12.00 | 12.00 | 12.00 | 12.00 | 12.00 | 12.00 | 12.00 | 12.00 |
| No. of Lanes in Pocket | 1 | 0 | 0 | 1 | 0 | 0 | 1 | 0 | 0 | 1 | 0 | 0 |
| Pocket Length [ft] | 200.00 | 100.00 | 100.00 | 85.00 | 100.00 | 100.00 | 185.00 | 100.00 | 100.00 | 150.00 | 100.00 | 100.00 |
| Speed [mph] | 45.00 | | | 45.00 | | | 50.00 | | | 50.00 | | |
| Grade [%] | 0.00 | | | 0.00 | | | 0.00 | | | 0.00 | | |
| Crosswalk | Yes | | | Yes | | | Yes | | | Yes | | |

**volumes**

| Name | Cedar Avenue | | | Cedar Avenue | | | Slover Avenue | | | Slover Avenue | | |
|---|---|---|---|---|---|---|---|---|---|---|---|---|
| Base Volume Input [veh/h] | 81 | 786 | 13 | 131 | 1030 | 210 | 155 | 207 | 119 | 44 | 179 | 46 |
| Base Volume Adjustment Factor | 1.0000 | 1.0000 | 1.0000 | 1.0000 | 1.0000 | 1.0000 | 1.0000 | 1.0000 | 1.0000 | 1.0000 | 1.0000 | 1.0000 |
| Heavy Vehicles Percentage [%] | 5.00 | 5.00 | 5.00 | 5.00 | 5.00 | 5.00 | 2.00 | 2.00 | 2.00 | 2.00 | 2.00 | 2.00 |
| Growth Rate | 1.00 | 1.00 | 1.00 | 1.00 | 1.00 | 1.00 | 1.00 | 1.00 | 1.00 | 1.00 | 1.00 | 1.00 |
| In-Process Volume [veh/h] | 0 | 0 | 0 | 0 | 0 | 0 | 0 | 0 | 0 | 0 | 0 | 0 |
| Site-Generated Trips [veh/h] | 0 | 0 | 0 | 0 | 0 | 0 | 0 | 0 | 0 | 0 | 0 | 0 |
| Diverted Trips [veh/h] | 0 | 0 | 0 | 0 | 0 | 0 | 0 | 0 | 0 | 0 | 0 | 0 |
| Pass-by Trips [veh/h] | 0 | 0 | 0 | 0 | 0 | 0 | 0 | 0 | 0 | 0 | 0 | 0 |
| Existing Site Adjustment Volume [veh/h] | 0 | 0 | 0 | 0 | 0 | 0 | 0 | 0 | 0 | 0 | 0 | 0 |
| Other Volume [veh/h] | 0 | 0 | 0 | 0 | 0 | 0 | 0 | 0 | 0 | 0 | 0 | 0 |
| Right-Turn on Red Volume [veh/h] | 0 | 0 | 0 | 0 | 0 | 0 | 0 | 0 | 0 | 0 | 0 | 0 |
| Total Hourly Volume [veh/h] | 81 | 786 | 13 | 131 | 1030 | 210 | 155 | 207 | 119 | 44 | 179 | 46 |
| Peak Hour Factor | 0.8589 | 0.8890 | 0.8890 | 0.8890 | 0.8890 | 0.8890 | 0.8890 | 0.8890 | 0.8890 | 0.8890 | 0.8890 | 0.8890 |
| Other Adjustment Factor | 1.0000 | 1.0000 | 1.0000 | 1.0000 | 1.0000 | 1.0000 | 1.0000 | 1.0000 | 1.0000 | 1.0000 | 1.0000 | 1.0000 |
| Total 15-Minute Volume [veh/h] | 24 | 221 | 4 | 37 | 290 | 59 | 44 | 58 | 33 | 12 | 50 | 13 |
| Total Analysis Volume [veh/h] | 94 | 884 | 15 | 147 | 1159 | 236 | 174 | 233 | 134 | 49 | 201 | 52 |
| Presence of On-Street Parking | No | | No | No | | No | No | | No | No | | No |
| On-Street Parking Maneuver Rate [/h] | 0 | 0 | 0 | 0 | 0 | 0 | 0 | 0 | 0 | 0 | 0 | 0 |
| Local Bus Stopping Rate [/h] | 0 | 0 | 0 | 0 | 0 | 0 | 0 | 0 | 0 | 0 | 0 | 0 |
| Pedestrian Volume [ped/h] | 0 | | | 0 | | | 0 | | | 0 | | |
| Bicycle Volume [bicycles/h] | 0 | | | 0 | | | 0 | | | 0 | | |

**Intersection Settings**

| | |
|---|---|
| Located in CBD | No |
| Signal Coordination Group | 2 - NS - Cedar |
| Cycle Length [s] | 120 |
| Coordination Type | Time of Day Pattern Coordinated |
| Actuation Type | Fully actuated |
| Offset [s] | 36.0 |
| Offset Reference | LagFO |
| Permissive Mode | SingleBand |
| Lost time [s] | 16.00 |

**Phasing & Timing**

| Control Type | Protecte | Permiss | Permiss | Protecte | Permiss | Permiss | Protecte | Permiss | Permiss | Protecte | Permiss | Overlap |
|---|---|---|---|---|---|---|---|---|---|---|---|---|
| Signal group | 5 | 2 | 0 | 1 | 6 | 0 | 3 | 8 | 0 | 7 | 4 | 4 |
| Auxiliary Signal Groups | | | | | | | | | | | | 1,4 |
| Lead / Lag | Lead | - | - | Lead | - | - | Lead | - | - | Lead | - | - |
| Minimum Green [s] | 5 | 5 | 0 | 5 | 5 | 0 | 5 | 5 | 0 | 5 | 5 | 5 |
| Maximum Green [s] | 30 | 30 | 0 | 30 | 30 | 0 | 30 | 30 | 0 | 30 | 30 | 30 |
| Amber [s] | 4.8 | 4.8 | 0.0 | 4.8 | 4.8 | 0.0 | 5.2 | 5.2 | 0.0 | 5.2 | 5.2 | 5.2 |
| All red [s] | 1.0 | 1.0 | 0.0 | 1.0 | 1.0 | 0.0 | 1.0 | 1.0 | 0.0 | 1.0 | 1.0 | 1.0 |
| Split [s] | 11 | 48 | 0 | 11 | 48 | 0 | 16 | 49 | 0 | 12 | 45 | 45 |
| Vehicle Extension [s] | 3.0 | 3.0 | 0.0 | 3.0 | 3.0 | 0.0 | 3.0 | 3.0 | 0.0 | 3.0 | 3.0 | 3.0 |
| Walk [s] | 0 | 7 | 0 | 0 | 7 | 0 | 0 | 7 | 0 | 0 | 7 | 7 |
| Pedestrian Clearance [s] | 0 | 31 | 0 | 0 | 20 | 0 | 0 | 26 | 0 | 0 | 31 | 31 |
| I1, Start-Up Lost Time [s] | 2.0 | 2.0 | 0.0 | 2.0 | 2.0 | 0.0 | 2.0 | 2.0 | 0.0 | 2.0 | 2.0 | 2.0 |
| I2, Clearance Lost Time [s] | 3.8 | 3.8 | 0.0 | 3.8 | 3.8 | 0.0 | 4.2 | 4.2 | 0.0 | 4.2 | 4.2 | 4.2 |
| Minimum Recall | No | No | | No | No | | No | No | | No | No | No |
| Maximum Recall | No | No | | No | No | | No | No | | No | No | No |
| Pedestrian Recall | No | No | | No | No | | No | No | | No | No | No |
| Detector Location [ft] | 0.0 | 0.0 | 0.0 | 0.0 | 0.0 | 0.0 | 0.0 | 0.0 | 0.0 | 0.0 | 0.0 | 0.0 |
| Detector Length [ft] | 0.0 | 0.0 | 0.0 | 0.0 | 0.0 | 0.0 | 0.0 | 0.0 | 0.0 | 0.0 | 0.0 | 0.0 |
| I, Upstream Filtering Factor | 1.00 | 1.00 | 1.00 | 1.00 | 1.00 | 1.00 | 1.00 | 1.00 | 1.00 | 1.00 | 1.00 | 1.00 |

**Exclusive Pedestrian Phase**

| | |
|---|---|
| Pedestrian Signal Group | 0 |
| Pedestrian Walk [s] | 0 |
| Pedestrian Clearance [s] | 0 |

**Lane Group Calculations**

| Lane Group | L | C | C | L | C | C | L | C | L | C | R |
|---|---|---|---|---|---|---|---|---|---|---|---|
| L, Total Lost Time per Cycle [s] | 5.80 | 5.80 | 5.80 | 5.80 | 5.80 | 5.80 | 6.20 | 6.20 | 6.20 | 6.20 | 5.80 |
| l1_p, Permitted Start-Up Lost Time [s] | 0.00 | 0.00 | 0.00 | 0.00 | 0.00 | 0.00 | 0.00 | 0.00 | 0.00 | 0.00 | 0.00 |
| l2, Clearance Lost Time [s] | 0.00 | 3.80 | 3.80 | 0.00 | 3.80 | 3.80 | 4.20 | 4.20 | 4.20 | 4.20 | 0.00 |
| g_i, Effective Green Time [s] | 70 | 60 | 60 | 70 | 59 | 59 | 10 | 27 | 4 | 22 | 32 |
| g / C, Green / Cycle | 0.58 | 0.50 | 0.50 | 0.58 | 0.50 | 0.50 | 0.08 | 0.23 | 0.04 | 0.18 | 0.27 |
| (v / s)_i Volume / Saturation Flow Rate | 0.17 | 0.25 | 0.25 | 0.20 | 0.39 | 0.40 | 0.10 | 0.21 | 0.03 | 0.11 | 0.03 |
| s, saturation flow rate [veh/h] | 542 | 1810 | 1799 | 728 | 1810 | 1706 | 1774 | 1750 | 1774 | 1863 | 1583 |
| c, Capacity [veh/h] | 290 | 905 | 899 | 434 | 895 | 844 | 146 | 400 | 64 | 340 | 427 |
| d1, Uniform Delay [s] | 17.07 | 12.50 | 12.50 | 7.95 | 16.09 | 16.34 | 55.11 | 45.21 | 57.35 | 44.96 | 33.13 |
| k, delay calibration | 0.50 | 0.50 | 0.50 | 0.50 | 0.50 | 0.50 | 0.38 | 0.12 | 0.11 | 0.11 | 0.11 |
| I, Upstream Filtering Factor | 1.00 | 1.00 | 1.00 | 1.00 | 1.00 | 1.00 | 1.00 | 1.00 | 1.00 | 1.00 | 1.00 |
| d2, Incremental Delay [s] | 2.95 | 1.96 | 1.97 | 2.11 | 7.22 | 8.32 | 126.01 | 9.85 | 16.56 | 1.63 | 0.13 |
| d3, Initial Queue Delay [s] | 0.00 | 0.00 | 0.00 | 0.00 | 0.00 | 0.00 | 0.00 | 0.00 | 0.00 | 0.00 | 0.00 |
| Rp, platoon ratio | 1.33 | 1.33 | 1.33 | 1.33 | 1.33 | 1.33 | 1.00 | 1.00 | 1.00 | 1.00 | 1.00 |
| PF, progression factor | 1.00 | 1.00 | 1.00 | 1.00 | 1.00 | 1.00 | 1.00 | 1.00 | 1.00 | 1.00 | 1.00 |

**Lane Group Results**

| | | | | | | | | | | | |
|---|---|---|---|---|---|---|---|---|---|---|---|
| X, volume / capacity | 0.32 | 0.50 | 0.50 | 0.34 | 0.79 | 0.81 | 1.19 | 0.92 | 0.76 | 0.59 | 0.12 |
| d, Delay for Lane Group [s/veh] | 20.02 | 14.46 | 14.47 | 10.07 | 23.31 | 24.66 | 181.11 | 55.06 | 73.90 | 46.60 | 33.25 |
| Lane Group LOS | C | B | B | B | C | C | F | E | E | D | C |
| Critical Lane Group | Yes | No | No | No | No | Yes | No | Yes | Yes | No | No |
| 50th-Percentile Queue Length [veh] | 0.77 | 5.19 | 5.17 | 1.10 | 11.60 | 11.59 | 9.37 | 11.28 | 1.73 | 5.44 | 1.12 |
| 50th-Percentile Queue Length [ft] | 19.21 | 129.86 | 129.17 | 27.47 | 290.07 | 289.81 | 234.32 | 282.03 | 43.14 | 136.07 | 28.05 |
| 95th-Percentile Queue Length [veh] | 1.38 | 8.93 | 8.89 | 1.98 | 17.19 | 17.18 | 15.28 | 16.79 | 3.11 | 9.27 | 2.02 |
| 95th-Percentile Queue Length [ft] | 34.58 | 223.31 | 222.37 | 49.45 | 429.73 | 429.41 | 381.98 | 419.74 | 77.64 | 231.73 | 50.49 |

**Movement, Approach, & Intersection Results**

| | | | | | | | | | | | | |
|---|---|---|---|---|---|---|---|---|---|---|---|---|
| d_M, Delay for Movement [s/veh] | 20.02 | 14.46 | 14.47 | 10.07 | 23.83 | 24.66 | 181.11 | 55.06 | 55.06 | 73.90 | 46.60 | 33.25 |
| Movement LOS | C | B | B | B | C | C | F | E | E | E | D | C |
| d_A, Approach Delay [s/veh] | 14.99 | | | 22.65 | | | 95.60 | | | 48.73 | | |
| Approach LOS | B | | | C | | | F | | | D | | |
| d_I, Intersection Delay [s/veh] | 34.41 | | | | | | | | | | | |
| Intersection LOS | C | | | | | | | | | | | |
| Intersection V/C | 0.756 | | | | | | | | | | | |

## Sequence

| | | | | | | | | | | | | | | | | |
|---|---|---|---|---|---|---|---|---|---|---|---|---|---|---|---|---|
| Ring 1 | 1 | 2 | 3 | 4 | - | - | - | - | - | - | - | - | - | - | - | - |
| Ring 2 | 5 | 6 | 7 | 8 | - | - | - | - | - | - | - | - | - | - | - | - |
| Ring 3 | - | - | - | - | - | - | - | - | - | - | - | - | - | - | - | - |
| Ring 4 | - | - | - | - | - | - | - | - | - | - | - | - | - | - | - | - |

**Intersection Level Of Service Report**
**Intersection 1: Sierra Ave (NS) / San Bernardino Ave (EW)**

| | | | |
|---|---|---|---|
| Control Type: | Signalized | Delay (sec / veh): | 47.9 |
| Analysis Method: | HCM 2010 | Level Of Service: | D |
| Analysis Period: | 15 minutes | Volume to Capacity (v/c): | 0.853 |

**Intersection Setup**

| Name | Sierra Avenue | | | Sierra Avenue | | | San Bernardino Avenue | | | San Bernardino Avenue | | |
|---|---|---|---|---|---|---|---|---|---|---|---|---|
| Approach | Northbound | | | Southbound | | | Eastbound | | | Westbound | | |
| Lane Configuration | | | | | | | | | | | | |
| Turning Movement | Left | Thru | Right | Left | Thru | Right | Left | Thru | Right | Left | Thru | Right |
| Lane Width [ft] | 12.00 | 12.00 | 12.00 | 12.00 | 12.00 | 12.00 | 12.00 | 12.00 | 12.00 | 12.00 | 12.00 | 12.00 |
| No. of Lanes in Pocket | 1 | 0 | 1 | 1 | 0 | 0 | 1 | 0 | 0 | 1 | 0 | 0 |
| Pocket Length [ft] | 140.00 | 100.00 | 140.00 | 150.00 | 100.00 | 100.00 | 150.00 | 100.00 | 100.00 | 240.00 | 100.00 | 100.00 |
| Speed [mph] | 35.00 | | | 35.00 | | | 35.00 | | | 30.00 | | |
| Grade [%] | 0.00 | | | 0.00 | | | 0.00 | | | 0.00 | | |
| Crosswalk | Yes | | | Yes | | | Yes | | | Yes | | |

**volumes**

| Name | Sierra Avenue | | | Sierra Avenue | | | San Bernardino Avenue | | | San Bernardino Avenue | | |
|---|---|---|---|---|---|---|---|---|---|---|---|---|
| Base Volume Input [veh/h] | 262 | 1386 | 192 | 64 | 955 | 100 | 170 | 334 | 156 | 171 | 277 | 72 |
| Base Volume Adjustment Factor | 1.0000 | 1.0000 | 1.0000 | 1.0000 | 1.0000 | 1.0000 | 1.0000 | 1.0000 | 1.0000 | 1.0000 | 1.0000 | 1.0000 |
| Heavy Vehicles Percentage [%] | 2.00 | 2.00 | 2.00 | 2.00 | 2.00 | 2.00 | 2.00 | 2.00 | 2.00 | 2.00 | 2.00 | 2.00 |
| Growth Rate | 1.00 | 1.00 | 1.00 | 1.00 | 1.00 | 1.00 | 1.00 | 1.00 | 1.00 | 1.00 | 1.00 | 1.00 |
| In-Process Volume [veh/h] | 0 | 0 | 0 | 0 | 0 | 0 | 0 | 0 | 0 | 0 | 0 | 0 |
| Site-Generated Trips [veh/h] | 0 | 0 | 0 | 0 | 0 | 0 | 0 | 0 | 0 | 0 | 0 | 0 |
| Diverted Trips [veh/h] | 0 | 0 | 0 | 0 | 0 | 0 | 0 | 0 | 0 | 0 | 0 | 0 |
| Pass-by Trips [veh/h] | 0 | 0 | 0 | 0 | 0 | 0 | 0 | 0 | 0 | 0 | 0 | 0 |
| Existing Site Adjustment Volume [veh/h] | 0 | 0 | 0 | 0 | 0 | 0 | 0 | 0 | 0 | 0 | 0 | 0 |
| Other Volume [veh/h] | 0 | 0 | 0 | 0 | 0 | 0 | 0 | 0 | 0 | 0 | 0 | 0 |
| Right-Turn on Red Volume [veh/h] | 0 | 0 | 0 | 0 | 0 | 0 | 0 | 0 | 0 | 0 | 0 | 0 |
| Total Hourly Volume [veh/h] | 262 | 1386 | 192 | 64 | 955 | 100 | 170 | 334 | 156 | 171 | 277 | 72 |
| Peak Hour Factor | 0.9020 | 0.9020 | 0.9020 | 0.9020 | 0.9200 | 0.9020 | 0.9020 | 0.9020 | 0.9020 | 0.9020 | 0.9020 | 0.9020 |
| Other Adjustment Factor | 1.0000 | 1.0000 | 1.0000 | 1.0000 | 1.0000 | 1.0000 | 1.0000 | 1.0000 | 1.0000 | 1.0000 | 1.0000 | 1.0000 |
| Total 15-Minute Volume [veh/h] | 73 | 384 | 53 | 18 | 260 | 28 | 47 | 93 | 43 | 47 | 77 | 20 |
| Total Analysis Volume [veh/h] | 290 | 1537 | 213 | 71 | 1038 | 111 | 188 | 370 | 173 | 190 | 307 | 80 |
| Presence of On-Street Parking | No | | No | No | | No | No | | No | No | | No |
| On-Street Parking Maneuver Rate [/h] | 0 | 0 | 0 | 0 | 0 | 0 | 0 | 0 | 0 | 0 | 0 | 0 |
| Local Bus Stopping Rate [/h] | 0 | 0 | 0 | 0 | 0 | 0 | 0 | 0 | 0 | 0 | 0 | 0 |
| Pedestrian Volume [ped/h] | 0 | | | 0 | | | 0 | | | 0 | | |
| Bicycle Volume [bicycles/h] | 0 | | | 0 | | | 0 | | | 0 | | |

**Intersection Settings**

| | |
|---|---|
| Located in CBD | No |
| Signal Coordination Group | 1 - NS - Sierra |
| Cycle Length [s] | 120 |
| Coordination Type | Time of Day Pattern Coordinated |
| Actuation Type | Fully actuated |
| Offset [s] | 0.0 |
| Offset Reference | LagFO |
| Permissive Mode | SingleBand |
| Lost time [s] | 16.00 |

**Phasing & Timing**

| Control Type | Protecte | Permiss | Permiss | Protecte | Permiss | Permiss | Protecte | Permiss | Permiss | Protecte | Permiss | Permiss |
|---|---|---|---|---|---|---|---|---|---|---|---|---|
| Signal group | 5 | 2 | 0 | 1 | 6 | 0 | 3 | 8 | 0 | 7 | 4 | 0 |
| Auxiliary Signal Groups | | | | | | | | | | | | |
| Lead / Lag | Lead | - | - | Lead | - | - | Lead | - | - | Lead | - | - |
| Minimum Green [s] | 5 | 5 | 0 | 5 | 5 | 0 | 5 | 5 | 0 | 5 | 5 | 0 |
| Maximum Green [s] | 30 | 30 | 0 | 30 | 30 | 0 | 30 | 30 | 0 | 30 | 30 | 0 |
| Amber [s] | 4.1 | 4.1 | 0.0 | 4.1 | 4.1 | 0.0 | 4.1 | 4.1 | 0.0 | 3.7 | 3.7 | 0.0 |
| All red [s] | 1.0 | 1.0 | 0.0 | 1.0 | 1.0 | 0.0 | 1.0 | 1.0 | 0.0 | 1.0 | 1.0 | 0.0 |
| Split [s] | 21 | 52 | 0 | 11 | 42 | 0 | 19 | 41 | 0 | 16 | 38 | 0 |
| Vehicle Extension [s] | 3.0 | 3.0 | 0.0 | 3.0 | 3.0 | 0.0 | 3.0 | 3.0 | 0.0 | 3.0 | 3.0 | 0.0 |
| Walk [s] | 0 | 7 | 0 | 0 | 7 | 0 | 0 | 7 | 0 | 0 | 7 | 0 |
| Pedestrian Clearance [s] | 0 | 22 | 0 | 0 | 23 | 0 | 0 | 28 | 0 | 0 | 25 | 0 |
| I1, Start-Up Lost Time [s] | 2.0 | 2.0 | 0.0 | 2.0 | 2.0 | 0.0 | 2.0 | 2.0 | 0.0 | 2.0 | 2.0 | 0.0 |
| I2, Clearance Lost Time [s] | 3.1 | 3.1 | 0.0 | 3.1 | 3.1 | 0.0 | 3.1 | 3.1 | 0.0 | 2.7 | 2.7 | 0.0 |
| Minimum Recall | No | No | | No | No | | No | No | | No | No | |
| Maximum Recall | No | No | | No | No | | No | No | | No | No | |
| Pedestrian Recall | No | No | | No | No | | No | No | | No | No | |
| Detector Location [ft] | 0.0 | 0.0 | 0.0 | 0.0 | 0.0 | 0.0 | 0.0 | 0.0 | 0.0 | 0.0 | 0.0 | 0.0 |
| Detector Length [ft] | 0.0 | 0.0 | 0.0 | 0.0 | 0.0 | 0.0 | 0.0 | 0.0 | 0.0 | 0.0 | 0.0 | 0.0 |
| I, Upstream Filtering Factor | 1.00 | 1.00 | 1.00 | 1.00 | 1.00 | 1.00 | 1.00 | 1.00 | 1.00 | 1.00 | 1.00 | 1.00 |

**Exclusive Pedestrian Phase**

| | |
|---|---|
| Pedestrian Signal Group | 0 |
| Pedestrian Walk [s] | 0 |
| Pedestrian Clearance [s] | 0 |

**Lane Group Calculations**

| Lane Group | L | C | R | L | C | C | L | C | C | L | C | C |
|---|---|---|---|---|---|---|---|---|---|---|---|---|
| L, Total Lost Time per Cycle [s] | 5.10 | 5.10 | 5.10 | 5.10 | 5.10 | 5.10 | 5.10 | 5.10 | 5.10 | 4.70 | 4.70 | 4.70 |
| l1_p, Permitted Start-Up Lost Time [s] | 0.00 | 0.00 | 0.00 | 0.00 | 0.00 | 0.00 | 0.00 | 0.00 | 0.00 | 0.00 | 0.00 | 0.00 |
| l2, Clearance Lost Time [s] | 3.10 | 3.10 | 3.10 | 3.10 | 3.10 | 3.10 | 3.10 | 3.10 | 3.10 | 2.70 | 2.70 | 2.70 |
| g_i, Effective Green Time [s] | 16 | 61 | 61 | 6 | 52 | 52 | 14 | 21 | 21 | 11 | 19 | 19 |
| g / C, Green / Cycle | 0.13 | 0.51 | 0.51 | 0.05 | 0.43 | 0.43 | 0.12 | 0.18 | 0.18 | 0.09 | 0.16 | 0.16 |
| (v / s)_i Volume / Saturation Flow Rate | 0.16 | 0.43 | 0.13 | 0.04 | 0.31 | 0.31 | 0.11 | 0.15 | 0.15 | 0.11 | 0.11 | 0.11 |
| s, saturation flow rate [veh/h] | 1774 | 3547 | 1583 | 1774 | 1863 | 1800 | 1774 | 1863 | 1665 | 1774 | 1863 | 1732 |
| c, Capacity [veh/h] | 236 | 1814 | 810 | 89 | 798 | 771 | 206 | 330 | 295 | 168 | 290 | 270 |
| d1, Uniform Delay [s] | 49.40 | 15.56 | 10.33 | 55.46 | 20.65 | 20.67 | 52.45 | 48.00 | 48.05 | 54.35 | 47.92 | 47.99 |
| k, delay calibration | 0.50 | 0.50 | 0.50 | 0.13 | 0.50 | 0.50 | 0.30 | 0.11 | 0.11 | 0.44 | 0.11 | 0.11 |
| I, Upstream Filtering Factor | 1.00 | 1.00 | 1.00 | 1.00 | 1.00 | 1.00 | 1.00 | 1.00 | 1.00 | 1.00 | 1.00 | 1.00 |
| d2, Incremental Delay [s] | 134.95 | 5.12 | 0.79 | 18.36 | 5.85 | 6.09 | 30.70 | 6.79 | 7.83 | 104.40 | 2.88 | 3.21 |
| d3, Initial Queue Delay [s] | 0.00 | 0.00 | 0.00 | 0.00 | 0.00 | 0.00 | 0.00 | 0.00 | 0.00 | 0.00 | 0.00 | 0.00 |
| Rp, platoon ratio | 1.33 | 1.33 | 1.33 | 1.33 | 1.33 | 1.33 | 1.00 | 1.00 | 1.00 | 1.00 | 1.00 | 1.00 |
| PF, progression factor | 1.00 | 1.00 | 1.00 | 1.00 | 1.00 | 1.00 | 1.00 | 1.00 | 1.00 | 1.00 | 1.00 | 1.00 |

**Lane Group Results**

| | | | | | | | | | | | | |
|---|---|---|---|---|---|---|---|---|---|---|---|---|
| X, volume / capacity | 1.23 | 0.85 | 0.26 | 0.80 | 0.73 | 0.73 | 0.91 | 0.87 | 0.87 | 1.13 | 0.69 | 0.70 |
| d, Delay for Lane Group [s/veh] | 184.35 | 20.69 | 11.12 | 73.82 | 26.50 | 26.76 | 83.15 | 54.79 | 55.88 | 158.75 | 50.80 | 51.20 |
| Lane Group LOS | F | C | B | E | C | C | F | D | E | F | D | D |
| Critical Lane Group | Yes | No | No | No | No | Yes | No | No | Yes | Yes | No | No |
| 50th-Percentile Queue Length [veh] | 15.51 | 12.98 | 2.17 | 2.53 | 11.44 | 11.15 | 7.30 | 8.84 | 8.04 | 9.94 | 5.88 | 5.56 |
| 50th-Percentile Queue Length [ft] | 387.75 | 324.62 | 54.34 | 63.18 | 286.08 | 278.69 | 182.58 | 220.90 | 201.02 | 248.54 | 146.89 | 138.95 |
| 95th-Percentile Queue Length [veh] | 23.95 | 18.89 | 3.91 | 4.55 | 16.99 | 16.62 | 11.74 | 13.71 | 12.69 | 15.82 | 9.85 | 9.42 |
| 95th-Percentile Queue Length [ft] | 598.87 | 472.36 | 97.81 | 113.73 | 424.77 | 415.58 | 293.38 | 342.78 | 317.28 | 395.56 | 246.27 | 235.61 |

**Movement, Approach, & Intersection Results**

| | | | | | | | | | | | | |
|---|---|---|---|---|---|---|---|---|---|---|---|---|
| d_M, Delay for Movement [s/veh] | 184.35 | 20.69 | 11.12 | 73.82 | 26.61 | 26.76 | 83.15 | 55.04 | 55.88 | 158.75 | 50.94 | 51.20 |
| Movement LOS | F | C | B | E | C | C | F | E | E | F | D | D |
| d_A, Approach Delay [s/veh] | 42.95 | | | 29.37 | | | 62.47 | | | 86.48 | | |
| Approach LOS | D | | | C | | | E | | | F | | |
| d_I, Intersection Delay [s/veh] | 47.95 | | | | | | | | | | | |
| Intersection LOS | D | | | | | | | | | | | |
| Intersection V/C | 0.853 | | | | | | | | | | | |

## Sequence

| | | | | | | | | | | | | | | | | |
|---|---|---|---|---|---|---|---|---|---|---|---|---|---|---|---|---|
| Ring 1 | 1 | 2 | 3 | 4 | - | - | - | - | - | - | - | - | - | - | - | - |
| Ring 2 | 5 | 6 | 7 | 8 | - | - | - | - | - | - | - | - | - | - | - | - |
| Ring 3 | - | - | - | - | - | - | - | - | - | - | - | - | - | - | - | - |
| Ring 4 | - | - | - | - | - | - | - | - | - | - | - | - | - | - | - | - |

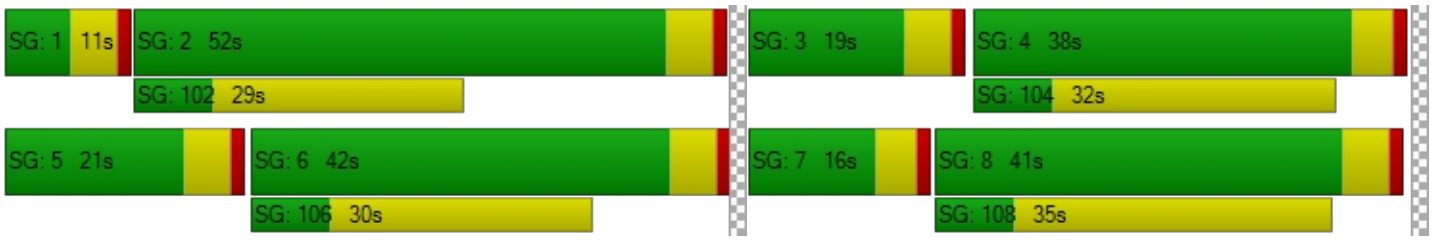

**Intersection Level Of Service Report**
**Intersection 2: Sierra Ave (NS) / Valley Blvd (EW)**

| | | | |
|---|---|---|---|
| Control Type: | Signalized | Delay (sec / veh): | 41.8 |
| Analysis Method: | HCM 2010 | Level Of Service: | D |
| Analysis Period: | 15 minutes | Volume to Capacity (v/c): | 0.989 |

**Intersection Setup**

| Name | Sierra Avenue | | | Sierra Avenue | | | Valley Boulevard | | | Valley Boulevard | | |
|---|---|---|---|---|---|---|---|---|---|---|---|---|
| Approach | Northbound | | | Southbound | | | Eastbound | | | Westbound | | |
| Lane Configuration | | | | | | | | | | | | |
| Turning Movement | Left | Thru | Right | Left | Thru | Right | Left | Thru | Right | Left | Thru | Right |
| Lane Width [ft] | 12.00 | 12.00 | 12.00 | 12.00 | 12.00 | 12.00 | 12.00 | 12.00 | 12.00 | 12.00 | 12.00 | 12.00 |
| No. of Lanes in Pocket | 2 | 0 | 0 | 2 | 0 | 0 | 2 | 0 | 0 | 2 | 0 | 0 |
| Pocket Length [ft] | 370.00 | 100.00 | 100.00 | 165.00 | 100.00 | 100.00 | 260.00 | 100.00 | 100.00 | 355.00 | 100.00 | 100.00 |
| Speed [mph] | 35.00 | | | 35.00 | | | 40.00 | | | 40.00 | | |
| Grade [%] | 0.00 | | | 0.00 | | | 0.00 | | | 0.00 | | |
| Crosswalk | Yes | | | Yes | | | Yes | | | Yes | | |

**volumes**

| Name | Sierra Avenue | | | Sierra Avenue | | | Valley Boulevard | | | Valley Boulevard | | |
|---|---|---|---|---|---|---|---|---|---|---|---|---|
| Base Volume Input [veh/h] | 408 | 1548 | 934 | 178 | 1418 | 205 | 242 | 479 | 369 | 549 | 445 | 236 |
| Base Volume Adjustment Factor | 1.0000 | 1.0000 | 1.0000 | 1.0000 | 1.0000 | 1.0000 | 1.0000 | 1.0000 | 1.0000 | 1.0000 | 1.0000 | 1.0000 |
| Heavy Vehicles Percentage [%] | 2.00 | 2.00 | 2.00 | 2.00 | 2.00 | 2.00 | 4.00 | 4.00 | 4.00 | 4.00 | 4.00 | 4.00 |
| Growth Rate | 1.00 | 1.00 | 1.00 | 1.00 | 1.00 | 1.00 | 1.00 | 1.00 | 1.00 | 1.00 | 1.00 | 1.00 |
| In-Process Volume [veh/h] | 0 | 0 | 0 | 0 | 0 | 0 | 0 | 0 | 0 | 0 | 0 | 0 |
| Site-Generated Trips [veh/h] | 0 | 0 | 0 | 0 | 0 | 0 | 0 | 0 | 0 | 0 | 0 | 0 |
| Diverted Trips [veh/h] | 0 | 0 | 0 | 0 | 0 | 0 | 0 | 0 | 0 | 0 | 0 | 0 |
| Pass-by Trips [veh/h] | 0 | 0 | 0 | 0 | 0 | 0 | 0 | 0 | 0 | 0 | 0 | 0 |
| Existing Site Adjustment Volume [veh/h] | 0 | 0 | 0 | 0 | 0 | 0 | 0 | 0 | 0 | 0 | 0 | 0 |
| Other Volume [veh/h] | 0 | 0 | 0 | 0 | 0 | 0 | 0 | 0 | 0 | 0 | 0 | 0 |
| Right-Turn on Red Volume [veh/h] | 0 | 0 | 0 | 0 | 0 | 0 | 0 | 0 | 0 | 0 | 0 | 0 |
| Total Hourly Volume [veh/h] | 408 | 1548 | 934 | 178 | 1418 | 205 | 242 | 479 | 369 | 549 | 445 | 236 |
| Peak Hour Factor | 0.9720 | 0.9720 | 0.9720 | 0.9720 | 0.9720 | 0.9720 | 0.9720 | 0.9720 | 0.9720 | 0.9720 | 0.9720 | 0.9720 |
| Other Adjustment Factor | 1.0000 | 1.0000 | 1.0000 | 1.0000 | 1.0000 | 1.0000 | 1.0000 | 1.0000 | 1.0000 | 1.0000 | 1.0000 | 1.0000 |
| Total 15-Minute Volume [veh/h] | 105 | 398 | 240 | 46 | 365 | 53 | 62 | 123 | 95 | 141 | 114 | 61 |
| Total Analysis Volume [veh/h] | 420 | 1593 | 961 | 183 | 1459 | 211 | 249 | 493 | 380 | 565 | 458 | 243 |
| Presence of On-Street Parking | No | | No | No | | No | No | | No | No | | No |
| On-Street Parking Maneuver Rate [/h] | 0 | 0 | 0 | 0 | 0 | 0 | 0 | 0 | 0 | 0 | 0 | 0 |
| Local Bus Stopping Rate [/h] | 0 | 0 | 0 | 0 | 0 | 0 | 0 | 0 | 0 | 0 | 0 | 0 |
| Pedestrian Volume [ped/h] | 0 | | | 0 | | | 0 | | | 0 | | |
| Bicycle Volume [bicycles/h] | 0 | | | 0 | | | 0 | | | 0 | | |

**Intersection Settings**

| | |
|---|---|
| Located in CBD | No |
| Signal Coordination Group | 1 - NS - Sierra |
| Cycle Length [s] | 120 |
| Coordination Type | Time of Day Pattern Coordinated |
| Actuation Type | Fully actuated |
| Offset [s] | 62.0 |
| Offset Reference | LagFO |
| Permissive Mode | SingleBand |
| Lost time [s] | 16.00 |

**Phasing & Timing**

| Control Type | Protecte | Permiss | Overlap | Protecte | Permiss | Permiss | Protecte | Permiss | Overlap | Protecte | Permiss | Overlap |
|---|---|---|---|---|---|---|---|---|---|---|---|---|
| Signal group | 5 | 2 | 2 | 1 | 6 | 0 | 3 | 8 | 8 | 7 | 4 | 4 |
| Auxiliary Signal Groups | | | 2,7 | | | | | | 5,8 | | | 1,4 |
| Lead / Lag | Lead | - | - | Lead | - | - | Lead | - | - | Lead | - | - |
| Minimum Green [s] | 5 | 5 | 5 | 5 | 5 | 0 | 5 | 5 | 5 | 5 | 5 | 5 |
| Maximum Green [s] | 30 | 30 | 30 | 30 | 30 | 0 | 30 | 30 | 30 | 30 | 30 | 30 |
| Amber [s] | 4.1 | 4.1 | 4.1 | 4.1 | 4.1 | 0.0 | 4.4 | 4.4 | 4.4 | 4.4 | 4.4 | 4.4 |
| All red [s] | 1.0 | 1.0 | 1.0 | 1.0 | 1.0 | 0.0 | 1.0 | 1.0 | 1.0 | 1.0 | 1.0 | 1.0 |
| Split [s] | 20 | 60 | 60 | 12 | 52 | 0 | 17 | 22 | 22 | 26 | 31 | 31 |
| Vehicle Extension [s] | 3.0 | 3.0 | 3.0 | 3.0 | 3.0 | 0.0 | 3.0 | 3.0 | 3.0 | 3.0 | 3.0 | 3.0 |
| Walk [s] | 0 | 7 | 7 | 0 | 7 | 0 | 0 | 5 | 5 | 0 | 5 | 5 |
| Pedestrian Clearance [s] | 0 | 24 | 24 | 0 | 26 | 0 | 0 | 10 | 10 | 0 | 10 | 10 |
| I1, Start-Up Lost Time [s] | 2.0 | 2.0 | 2.0 | 2.0 | 2.0 | 0.0 | 2.0 | 2.0 | 2.0 | 2.0 | 2.0 | 2.0 |
| I2, Clearance Lost Time [s] | 3.1 | 3.1 | 3.1 | 3.1 | 3.1 | 0.0 | 3.4 | 3.4 | 3.4 | 3.4 | 3.4 | 3.4 |
| Minimum Recall | No | No | No | No | No | | No | No | No | No | No | No |
| Maximum Recall | No | No | No | No | No | | No | No | No | No | No | No |
| Pedestrian Recall | No | No | No | No | No | | No | No | No | No | No | No |
| Detector Location [ft] | 0.0 | 0.0 | 0.0 | 0.0 | 0.0 | 0.0 | 0.0 | 0.0 | 0.0 | 0.0 | 0.0 | 0.0 |
| Detector Length [ft] | 0.0 | 0.0 | 0.0 | 0.0 | 0.0 | 0.0 | 0.0 | 0.0 | 0.0 | 0.0 | 0.0 | 0.0 |
| I, Upstream Filtering Factor | 1.00 | 1.00 | 1.00 | 1.00 | 1.00 | 1.00 | 1.00 | 1.00 | 1.00 | 1.00 | 1.00 | 1.00 |

**Exclusive Pedestrian Phase**

| | |
|---|---|
| Pedestrian Signal Group | 0 |
| Pedestrian Walk [s] | 0 |
| Pedestrian Clearance [s] | 0 |

**Lane Group Calculations**

| Lane Group | L | C | R | L | C | C | L | C | R | L | C | R |
|---|---|---|---|---|---|---|---|---|---|---|---|---|
| L, Total Lost Time per Cycle [s] | 5.10 | 5.10 | 5.40 | 5.10 | 5.10 | 5.10 | 5.40 | 5.40 | 5.10 | 5.40 | 5.40 | 5.10 |
| l1_p, Permitted Start-Up Lost Time [s] | 0.00 | 0.00 | 0.00 | 0.00 | 0.00 | 0.00 | 0.00 | 0.00 | 0.00 | 0.00 | 0.00 | 0.00 |
| l2, Clearance Lost Time [s] | 3.10 | 3.10 | 0.00 | 3.10 | 3.10 | 3.10 | 3.40 | 3.40 | 0.00 | 3.40 | 3.40 | 0.00 |
| g_i, Effective Green Time [s] | 15 | 55 | 81 | 7 | 47 | 47 | 11 | 17 | 37 | 21 | 26 | 39 |
| g / C, Green / Cycle | 0.12 | 0.46 | 0.67 | 0.06 | 0.39 | 0.39 | 0.09 | 0.14 | 0.31 | 0.17 | 0.22 | 0.32 |
| (v / s)_i Volume / Saturation Flow Rate | 0.12 | 0.45 | 0.61 | 0.05 | 0.32 | 0.32 | 0.07 | 0.14 | 0.24 | 0.17 | 0.13 | 0.16 |
| s, saturation flow rate [veh/h] | 3445 | 3547 | 1583 | 3445 | 3547 | 1745 | 3379 | 3478 | 1553 | 3379 | 3478 | 1553 |
| c, Capacity [veh/h] | 428 | 1625 | 1065 | 199 | 1390 | 684 | 302 | 477 | 476 | 580 | 763 | 500 |
| d1, Uniform Delay [s] | 49.92 | 22.81 | 4.07 | 55.11 | 24.87 | 24.93 | 51.93 | 49.05 | 32.24 | 46.00 | 37.94 | 27.06 |
| k, delay calibration | 0.11 | 0.50 | 0.50 | 0.11 | 0.50 | 0.50 | 0.11 | 0.11 | 0.50 | 0.11 | 0.11 | 0.50 |
| I, Upstream Filtering Factor | 1.00 | 1.00 | 1.00 | 1.00 | 1.00 | 1.00 | 1.00 | 1.00 | 1.00 | 1.00 | 1.00 | 1.00 |
| d2, Incremental Delay [s] | 16.05 | 18.05 | 12.23 | 15.42 | 5.03 | 9.93 | 5.60 | 28.44 | 13.09 | 12.18 | 0.76 | 3.35 |
| d3, Initial Queue Delay [s] | 0.00 | 0.00 | 0.00 | 0.00 | 0.00 | 0.00 | 0.00 | 0.00 | 0.00 | 0.00 | 0.00 | 0.00 |
| Rp, platoon ratio | 1.33 | 1.33 | 1.33 | 1.33 | 1.33 | 1.33 | 1.33 | 1.33 | 1.33 | 1.33 | 1.33 | 1.33 |
| PF, progression factor | 1.00 | 1.00 | 1.00 | 1.00 | 1.00 | 1.00 | 1.00 | 1.00 | 1.00 | 1.00 | 1.00 | 1.00 |

**Lane Group Results**

| | | | | | | | | | | | | |
|---|---|---|---|---|---|---|---|---|---|---|---|---|
| X, volume / capacity | 0.98 | 0.98 | 0.90 | 0.92 | 0.80 | 0.81 | 0.82 | 1.03 | 0.80 | 0.97 | 0.60 | 0.49 |
| d, Delay for Lane Group [s/veh] | 65.97 | 40.86 | 16.29 | 70.53 | 29.91 | 34.87 | 57.53 | 77.48 | 45.33 | 58.19 | 38.71 | 30.41 |
| Lane Group LOS | E | D | B | E | C | C | E | F | D | E | D | C |
| Critical Lane Group | No | No | Yes | Yes | No | No | No | No | Yes | Yes | No | No |
| 50th-Percentile Queue Length [veh] | 6.89 | 21.62 | 6.56 | 3.10 | 12.34 | 13.16 | 3.74 | 8.53 | 10.33 | 8.71 | 5.42 | 5.00 |
| 50th-Percentile Queue Length [ft] | 172.24 | 540.38 | 164.01 | 77.58 | 308.40 | 328.99 | 93.48 | 213.24 | 258.22 | 217.74 | 135.51 | 124.88 |
| 95th-Percentile Queue Length [veh] | 11.19 | 29.24 | 10.76 | 5.59 | 18.10 | 19.11 | 6.73 | 13.51 | 15.60 | 13.55 | 9.24 | 8.66 |
| 95th-Percentile Queue Length [ft] | 279.86 | 731.00 | 269.03 | 139.65 | 452.40 | 477.72 | 168.26 | 337.84 | 389.99 | 338.74 | 230.96 | 216.52 |

**Movement, Approach, & Intersection Results**

| | | | | | | | | | | | | |
|---|---|---|---|---|---|---|---|---|---|---|---|---|
| d_M, Delay for Movement [s/veh] | 65.97 | 40.86 | 16.29 | 70.53 | 31.07 | 34.87 | 57.53 | 77.48 | 45.33 | 58.19 | 38.71 | 30.41 |
| Movement LOS | E | D | B | E | C | C | E | F | D | E | D | C |
| d_A, Approach Delay [s/veh] | 36.47 | | | 35.40 | | | 62.17 | | | 45.81 | | |
| Approach LOS | D | | | D | | | E | | | D | | |
| d_I, Intersection Delay [s/veh] | 41.83 | | | | | | | | | | | |
| Intersection LOS | D | | | | | | | | | | | |
| Intersection V/C | 0.989 | | | | | | | | | | | |

## Sequence

| | | | | | | | | | | | | | | | | |
|---|---|---|---|---|---|---|---|---|---|---|---|---|---|---|---|---|
| Ring 1 | 1 | 2 | 3 | 4 | - | - | - | - | - | - | - | - | - | - | - | - |
| Ring 2 | 5 | 6 | 7 | 8 | - | - | - | - | - | - | - | - | - | - | - | - |
| Ring 3 | - | - | - | - | - | - | - | - | - | - | - | - | - | - | - | - |
| Ring 4 | - | - | - | - | - | - | - | - | - | - | - | - | - | - | - | - |

**Intersection Level Of Service Report**
**Intersection 3: Sierra Ave (NS) / I-10 Ramps (EW)**

| | | | |
|---|---|---|---|
| Control Type: | Signalized | Delay (sec / veh): | 35.2 |
| Analysis Method: | HCM 2010 | Level Of Service: | D |
| Analysis Period: | 15 minutes | Volume to Capacity (v/c): | 0.926 |

**Intersection Setup**

| Name | Sierra Avenue | | | Sierra Avenue | | | I-10 Ramps | | | | | |
|---|---|---|---|---|---|---|---|---|---|---|---|---|
| Approach | Northbound | | | Southbound | | | Eastbound | | | Westbound | | |
| Lane Configuration | | | | | | | | | | | | |
| Turning Movement | Left | Thru | Right | Left | Thru | Right | Left | Thru | Right | Left | Thru | Right |
| Lane Width [ft] | 12.00 | 12.00 | 12.00 | 12.00 | 12.00 | 12.00 | 12.00 | 12.00 | 12.00 | 12.00 | 12.00 | 12.00 |
| No. of Lanes in Pocket | 2 | 0 | 0 | 2 | 0 | 0 | 1 | 0 | 0 | 0 | 0 | 1 |
| Pocket Length [ft] | 540.00 | 100.00 | 100.00 | 295.00 | 100.00 | 100.00 | 430.00 | 100.00 | 100.00 | 100.00 | 100.00 | 520.00 |
| Speed [mph] | 40.00 | | | 35.00 | | | 30.00 | | | 30.00 | | |
| Grade [%] | 0.00 | | | 0.00 | | | 0.00 | | | 0.00 | | |
| Crosswalk | No | | | No | | | Yes | | | Yes | | |

**volumes**

| Name | Sierra Avenue | | | Sierra Avenue | | | I-10 Ramps | | | | | |
|---|---|---|---|---|---|---|---|---|---|---|---|---|
| Base Volume Input [veh/h] | 292 | 1157 | 591 | 722 | 947 | 871 | 899 | 0 | 381 | 463 | 0 | 797 |
| Base Volume Adjustment Factor | 1.0000 | 1.0000 | 1.0000 | 1.0000 | 1.0000 | 1.0000 | 1.0000 | 1.0000 | 1.0000 | 1.0000 | 1.0000 | 1.0000 |
| Heavy Vehicles Percentage [%] | 2.00 | 2.00 | 2.00 | 2.00 | 2.00 | 2.00 | 2.00 | 2.00 | 2.00 | 2.00 | 2.00 | 2.00 |
| Growth Rate | 1.00 | 1.00 | 1.00 | 1.00 | 1.00 | 1.00 | 1.00 | 1.00 | 1.00 | 1.00 | 1.00 | 1.00 |
| In-Process Volume [veh/h] | 0 | 0 | 0 | 0 | 0 | 0 | 0 | 0 | 0 | 0 | 0 | 0 |
| Site-Generated Trips [veh/h] | 0 | 0 | 0 | 0 | 0 | 0 | 0 | 0 | 0 | 0 | 0 | 0 |
| Diverted Trips [veh/h] | 0 | 0 | 0 | 0 | 0 | 0 | 0 | 0 | 0 | 0 | 0 | 0 |
| Pass-by Trips [veh/h] | 0 | 0 | 0 | 0 | 0 | 0 | 0 | 0 | 0 | 0 | 0 | 0 |
| Existing Site Adjustment Volume [veh/h] | 0 | 0 | 0 | 0 | 0 | 0 | 0 | 0 | 0 | 0 | 0 | 0 |
| Other Volume [veh/h] | 0 | 0 | 0 | 0 | 0 | 0 | 0 | 0 | 0 | 0 | 0 | 0 |
| Right-Turn on Red Volume [veh/h] | 0 | 0 | 0 | 0 | 0 | 0 | 0 | 0 | 0 | 0 | 0 | 0 |
| Total Hourly Volume [veh/h] | 292 | 1157 | 591 | 722 | 947 | 871 | 899 | 0 | 381 | 463 | 0 | 797 |
| Peak Hour Factor | 0.9830 | 0.9830 | 0.9830 | 0.9830 | 0.9830 | 0.9830 | 0.9830 | 1.0000 | 0.9830 | 0.9830 | 1.0000 | 0.9830 |
| Other Adjustment Factor | 1.0000 | 1.0000 | 1.0000 | 1.0000 | 1.0000 | 1.0000 | 1.0000 | 1.0000 | 1.0000 | 1.0000 | 1.0000 | 1.0000 |
| Total 15-Minute Volume [veh/h] | 74 | 294 | 150 | 184 | 241 | 222 | 229 | 0 | 97 | 118 | 0 | 203 |
| Total Analysis Volume [veh/h] | 297 | 1177 | 601 | 734 | 963 | 886 | 915 | 0 | 388 | 471 | 0 | 811 |
| Presence of On-Street Parking | No | | No | No | | No | No | | No | No | | No |
| On-Street Parking Maneuver Rate [/h] | 0 | 0 | 0 | 0 | 0 | 0 | 0 | 0 | 0 | 0 | 0 | 0 |
| Local Bus Stopping Rate [/h] | 0 | 0 | 0 | 0 | 0 | 0 | 0 | 0 | 0 | 0 | 0 | 0 |
| Pedestrian Volume [ped/h] | 0 | | | 0 | | | 0 | | | 0 | | |
| Bicycle Volume [bicycles/h] | 0 | | | 0 | | | 0 | | | 0 | | |

**Intersection Settings**

| | |
|---|---|
| Located in CBD | No |
| Signal Coordination Group | 1 - NS - Sierra |
| Cycle Length [s] | 120 |
| Coordination Type | Time of Day Pattern Coordinated |
| Actuation Type | Fully actuated |
| Offset [s] | 82.0 |
| Offset Reference | LagFO |
| Permissive Mode | SingleBand |
| Lost time [s] | 12.00 |

**Phasing & Timing**

| Control Type | Permiss | Permiss | Overlap | Permiss | Permiss | Overlap | Permiss | Permiss | Overlap | Permiss | Permiss | Overlap |
|---|---|---|---|---|---|---|---|---|---|---|---|---|
| Signal group | 2 | 2 | 2 | 6 | 6 | 6 | 3 | 0 | 3 | 7 | 0 | 7 |
| Auxiliary Signal Groups | | | 2,3,6,7 | | | 2,3,6,7 | | | 2,3,6 | | | 2,6,7 |
| Lead / Lag | Lag | - | - | Lag | - | - | Lead | - | - | Lead | - | - |
| Minimum Green [s] | 5 | 5 | 5 | 5 | 5 | 5 | 5 | 0 | 5 | 5 | 0 | 5 |
| Maximum Green [s] | 30 | 30 | 30 | 30 | 30 | 30 | 30 | 0 | 30 | 30 | 0 | 30 |
| Amber [s] | 4.4 | 4.4 | 4.4 | 4.1 | 4.1 | 4.1 | 3.7 | 0.0 | 3.7 | 3.7 | 0.0 | 3.7 |
| All red [s] | 3.0 | 3.0 | 3.0 | 3.0 | 3.0 | 3.0 | 3.0 | 0.0 | 3.0 | 3.0 | 0.0 | 3.0 |
| Split [s] | 33 | 33 | 33 | 41 | 41 | 41 | 46 | 0 | 46 | 46 | 0 | 46 |
| Vehicle Extension [s] | 3.0 | 3.0 | 3.0 | 3.0 | 3.0 | 3.0 | 3.0 | 0.0 | 3.0 | 3.0 | 0.0 | 3.0 |
| Walk [s] | 7 | 7 | 7 | 7 | 7 | 7 | 7 | 0 | 7 | 7 | 0 | 7 |
| Pedestrian Clearance [s] | 15 | 15 | 15 | 15 | 15 | 15 | 15 | 0 | 15 | 15 | 0 | 15 |
| I1, Start-Up Lost Time [s] | 2.0 | 2.0 | 2.0 | 2.0 | 2.0 | 2.0 | 2.0 | 0.0 | 2.0 | 2.0 | 0.0 | 2.0 |
| I2, Clearance Lost Time [s] | 5.4 | 5.4 | 5.4 | 5.1 | 5.1 | 5.1 | 4.7 | 0.0 | 4.7 | 4.7 | 0.0 | 4.7 |
| Minimum Recall | | No | No | | No | No | No | | No | No | | No |
| Maximum Recall | | No | No | | No | No | No | | No | No | | No |
| Pedestrian Recall | | No | No | | No | No | No | | No | No | | No |
| Detector Location [ft] | 0.0 | 0.0 | 0.0 | 0.0 | 0.0 | 0.0 | 0.0 | 0.0 | 0.0 | 0.0 | 0.0 | 0.0 |
| Detector Length [ft] | 0.0 | 0.0 | 0.0 | 0.0 | 0.0 | 0.0 | 0.0 | 0.0 | 0.0 | 0.0 | 0.0 | 0.0 |
| I, Upstream Filtering Factor | 1.00 | 1.00 | 1.00 | 1.00 | 1.00 | 1.00 | 1.00 | 1.00 | 1.00 | 1.00 | 1.00 | 1.00 |

**Exclusive Pedestrian Phase**

| | |
|---|---|
| Pedestrian Signal Group | 0 |
| Pedestrian Walk [s] | 0 |
| Pedestrian Clearance [s] | 0 |

**Lane Group Calculations**

| Lane Group | L | C | R | L | C | R | L | R | L | R |
|---|---|---|---|---|---|---|---|---|---|---|
| L, Total Lost Time per Cycle [s] | 7.40 | 7.40 | 7.10 | 7.10 | 7.10 | 7.10 | 6.70 | 7.10 | 6.70 | 7.10 |
| l1_p, Permitted Start-Up Lost Time [s] | 2.00 | 0.00 | 0.00 | 2.00 | 0.00 | 0.00 | 2.00 | 0.00 | 2.00 | 0.00 |
| l2, Clearance Lost Time [s] | 5.40 | 5.40 | 0.00 | 5.10 | 5.10 | 0.00 | 4.70 | 5.40 | 4.70 | 0.00 |
| g_i, Effective Green Time [s] | 30 | 30 | 145 | 30 | 30 | 145 | 39 | 142 | 39 | 105 |
| g / C, Green / Cycle | 0.25 | 0.25 | 1.21 | 0.25 | 0.25 | 1.21 | 0.33 | 1.19 | 0.33 | 0.88 |
| (v / s)_i Volume / Saturation Flow Rate | 0.11 | 0.23 | 0.38 | 0.27 | 0.19 | 0.56 | 0.33 | 0.25 | 0.17 | 0.51 |
| s, saturation flow rate [veh/h] | 2741 | 5074 | 1583 | 2741 | 5074 | 1583 | 2741 | 1583 | 2741 | 1583 |
| c, Capacity [veh/h] | 691 | 1254 | 1909 | 700 | 1266 | 1909 | 902 | 1881 | 902 | 1392 |
| d1, Uniform Delay [s] | 35.29 | 39.30 | 0.00 | 42.15 | 36.79 | 0.00 | 42.76 | 0.00 | 34.76 | 0.90 |
| k, delay calibration | 0.50 | 0.50 | 0.50 | 0.50 | 0.50 | 0.50 | 0.11 | 0.50 | 0.11 | 0.50 |
| I, Upstream Filtering Factor | 1.00 | 1.00 | 1.00 | 1.00 | 1.00 | 1.00 | 1.00 | 1.00 | 1.00 | 1.00 |
| d2, Incremental Delay [s] | 1.95 | 14.43 | 0.43 | 47.24 | 4.34 | 0.81 | 17.78 | 0.25 | 0.47 | 1.79 |
| d3, Initial Queue Delay [s] | 0.00 | 0.00 | 0.00 | 0.00 | 0.00 | 0.00 | 0.00 | 0.00 | 0.00 | 0.00 |
| Rp, platoon ratio | 1.33 | 1.33 | 1.01 | 1.33 | 1.33 | 1.01 | 1.00 | 1.00 | 1.00 | 1.00 |
| PF, progression factor | 1.00 | 1.00 | 1.00 | 1.00 | 1.00 | 1.00 | 1.00 | 1.00 | 1.00 | 1.00 |

**Lane Group Results**

| | | | | | | | | | | |
|---|---|---|---|---|---|---|---|---|---|---|
| X, volume / capacity | 0.43 | 0.94 | 0.31 | 1.05 | 0.76 | 0.46 | 1.01 | 0.21 | 0.52 | 0.58 |
| d, Delay for Lane Group [s/veh] | 37.24 | 53.74 | 0.43 | 89.39 | 41.13 | 0.81 | 60.54 | 0.25 | 35.23 | 2.69 |
| Lane Group LOS | D | D | A | F | D | A | F | A | D | A |
| Critical Lane Group | No | Yes | No | Yes | No | No | Yes | No | No | No |
| 50th-Percentile Queue Length [veh] | 3.45 | 11.84 | 0.23 | 14.58 | 8.28 | 0.43 | 15.79 | 0.13 | 5.80 | 0.69 |
| 50th-Percentile Queue Length [ft] | 86.35 | 296.04 | 5.74 | 364.52 | 207.07 | 10.79 | 394.63 | 3.25 | 144.97 | 17.29 |
| 95th-Percentile Queue Length [veh] | 6.22 | 17.49 | 0.41 | 21.41 | 13.00 | 0.78 | 22.52 | 0.23 | 9.75 | 1.24 |
| 95th-Percentile Queue Length [ft] | 155.44 | 437.13 | 10.33 | 535.32 | 325.06 | 19.43 | 562.93 | 5.84 | 243.71 | 31.12 |

**Movement, Approach, & Intersection Results**

| | | | | | | | | | | | | |
|---|---|---|---|---|---|---|---|---|---|---|---|---|
| d_M, Delay for Movement [s/veh] | 37.24 | 53.74 | 0.43 | 89.39 | 41.13 | 0.81 | 60.54 | 0.00 | 0.25 | 35.23 | 0.00 | 2.69 |
| Movement LOS | D | D | A | F | D | A | F | | A | D | | A |
| d_A, Approach Delay [s/veh] | 35.94 | | | 41.01 | | | 42.59 | | | 14.64 | | |
| Approach LOS | D | | | D | | | D | | | B | | |
| d_I, Intersection Delay [s/veh] | 35.17 | | | | | | | | | | | |
| Intersection LOS | D | | | | | | | | | | | |
| Intersection V/C | 0.926 | | | | | | | | | | | |

## Sequence

| | | | | | | | | | | | | | | | | |
|---|---|---|---|---|---|---|---|---|---|---|---|---|---|---|---|---|
| Ring 1 | 2 | 6 | 3 | - | - | - | - | - | - | - | - | - | - | - | - | - |
| Ring 2 | - | - | 7 | - | - | - | - | - | - | - | - | - | - | - | - | - |
| Ring 3 | - | - | - | - | - | - | - | - | - | - | - | - | - | - | - | - |
| Ring 4 | - | - | - | - | - | - | - | - | - | - | - | - | - | - | - | - |

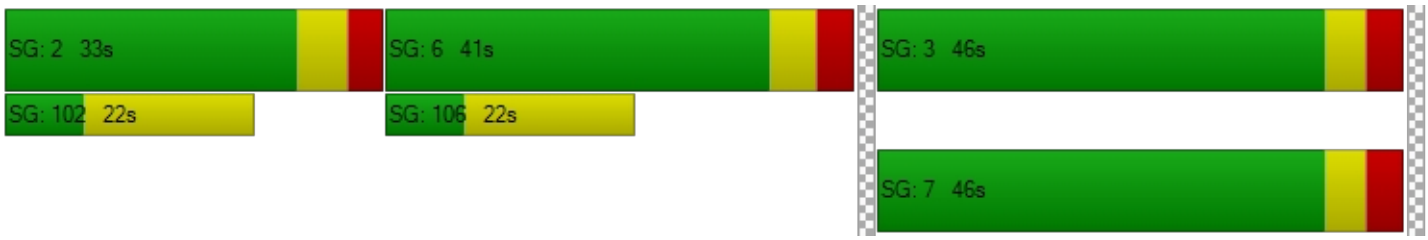

**Intersection Level Of Service Report**
**Intersection 4: Sierra Ave (NS) / Slover Ave (EW)**

| | | | |
|---|---|---|---|
| Control Type: | Signalized | Delay (sec / veh): | 38.7 |
| Analysis Method: | HCM 2010 | Level Of Service: | D |
| Analysis Period: | 15 minutes | Volume to Capacity (v/c): | 0.781 |

**Intersection Setup**

| Name | Sierra Avenue | | | Sierra Avenue | | | Slover Avenue | | | Slover Avenue | | |
|---|---|---|---|---|---|---|---|---|---|---|---|---|
| Approach | Northbound | | | Southbound | | | Eastbound | | | Westbound | | |
| Lane Configuration | | | | | | | | | | | | |
| Turning Movement | Left | Thru | Right | Left | Thru | Right | Left | Thru | Right | Left | Thru | Right |
| Lane Width [ft] | 12.00 | 12.00 | 12.00 | 12.00 | 12.00 | 12.00 | 12.00 | 12.00 | 12.00 | 12.00 | 12.00 | 12.00 |
| No. of Lanes in Pocket | 2 | 0 | 0 | 2 | 0 | 0 | 2 | 0 | 1 | 2 | 0 | 1 |
| Pocket Length [ft] | 195.00 | 100.00 | 100.00 | 615.00 | 100.00 | 100.00 | 290.00 | 100.00 | 290.00 | 230.00 | 100.00 | 300.00 |
| Speed [mph] | 50.00 | | | 40.00 | | | 45.00 | | | 45.00 | | |
| Grade [%] | 0.00 | | | 0.00 | | | 0.00 | | | 0.00 | | |
| Crosswalk | Yes | | | Yes | | | Yes | | | Yes | | |

**volumes**

| Name | Sierra Avenue | | | Sierra Avenue | | | Slover Avenue | | | Slover Avenue | | |
|---|---|---|---|---|---|---|---|---|---|---|---|---|
| Base Volume Input [veh/h] | 258 | 1051 | 261 | 527 | 983 | 150 | 311 | 580 | 188 | 336 | 403 | 691 |
| Base Volume Adjustment Factor | 1.0000 | 1.0000 | 1.0000 | 1.0000 | 1.0000 | 1.0000 | 1.0000 | 1.0000 | 1.0000 | 1.0000 | 1.0000 | 1.0000 |
| Heavy Vehicles Percentage [%] | 2.00 | 2.00 | 2.00 | 2.00 | 2.00 | 2.00 | 2.00 | 2.00 | 2.00 | 2.00 | 2.00 | 2.00 |
| Growth Rate | 1.00 | 1.00 | 1.00 | 1.00 | 1.00 | 1.00 | 1.00 | 1.00 | 1.00 | 1.00 | 1.00 | 1.00 |
| In-Process Volume [veh/h] | 0 | 0 | 0 | 0 | 0 | 0 | 0 | 0 | 0 | 0 | 0 | 0 |
| Site-Generated Trips [veh/h] | 0 | 0 | 0 | 0 | 0 | 0 | 0 | 0 | 0 | 0 | 0 | 0 |
| Diverted Trips [veh/h] | 0 | 0 | 0 | 0 | 0 | 0 | 0 | 0 | 0 | 0 | 0 | 0 |
| Pass-by Trips [veh/h] | 0 | 0 | 0 | 0 | 0 | 0 | 0 | 0 | 0 | 0 | 0 | 0 |
| Existing Site Adjustment Volume [veh/h] | 0 | 0 | 0 | 0 | 0 | 0 | 0 | 0 | 0 | 0 | 0 | 0 |
| Other Volume [veh/h] | 0 | 0 | 0 | 0 | 0 | 0 | 0 | 0 | 0 | 0 | 0 | 0 |
| Right-Turn on Red Volume [veh/h] | 0 | 0 | 0 | 0 | 0 | 0 | 0 | 0 | 0 | 0 | 0 | 0 |
| Total Hourly Volume [veh/h] | 258 | 1051 | 261 | 527 | 983 | 150 | 311 | 580 | 188 | 336 | 403 | 691 |
| Peak Hour Factor | 0.9580 | 0.9580 | 0.9580 | 0.9580 | 0.9580 | 0.9580 | 0.9580 | 0.9580 | 0.9580 | 0.9580 | 0.9580 | 0.9580 |
| Other Adjustment Factor | 1.0000 | 1.0000 | 1.0000 | 1.0000 | 1.0000 | 1.0000 | 1.0000 | 1.0000 | 1.0000 | 1.0000 | 1.0000 | 1.0000 |
| Total 15-Minute Volume [veh/h] | 67 | 274 | 68 | 138 | 257 | 39 | 81 | 151 | 49 | 88 | 105 | 180 |
| Total Analysis Volume [veh/h] | 269 | 1097 | 272 | 550 | 1026 | 157 | 325 | 605 | 196 | 351 | 421 | 721 |
| Presence of On-Street Parking | No | | No | No | | No | No | | No | No | | No |
| On-Street Parking Maneuver Rate [/h] | 0 | 0 | 0 | 0 | 0 | 0 | 0 | 0 | 0 | 0 | 0 | 0 |
| Local Bus Stopping Rate [/h] | 0 | 0 | 0 | 0 | 0 | 0 | 0 | 0 | 0 | 0 | 0 | 0 |
| Pedestrian Volume [ped/h] | 0 | | | 0 | | | 0 | | | 0 | | |
| Bicycle Volume [bicycles/h] | 0 | | | 0 | | | 0 | | | 0 | | |

**Intersection Settings**

| | |
|---|---|
| Located in CBD | No |
| Signal Coordination Group | 1 - NS - Sierra |
| Cycle Length [s] | 120 |
| Coordination Type | Time of Day Pattern Coordinated |
| Actuation Type | Fully actuated |
| Offset [s] | 15.0 |
| Offset Reference | LagFO |
| Permissive Mode | SingleBand |
| Lost time [s] | 16.00 |

**Phasing & Timing**

| Control Type | Protecte | Permiss | Permiss | Protecte | Permiss | Permiss | Protecte | Permiss | Permiss | Protecte | Permiss | Overlap |
|---|---|---|---|---|---|---|---|---|---|---|---|---|
| Signal group | 5 | 2 | 0 | 1 | 6 | 0 | 3 | 8 | 0 | 7 | 4 | 4 |
| Auxiliary Signal Groups | | | | | | | | | | | | 1,4 |
| Lead / Lag | Lead | - | - | Lead | - | - | Lead | - | - | Lead | - | - |
| Minimum Green [s] | 5 | 5 | 0 | 5 | 5 | 0 | 5 | 5 | 0 | 5 | 5 | 5 |
| Maximum Green [s] | 30 | 30 | 0 | 30 | 30 | 0 | 30 | 30 | 0 | 30 | 30 | 30 |
| Amber [s] | 5.2 | 5.2 | 0.0 | 4.4 | 4.4 | 0.0 | 4.8 | 4.8 | 0.0 | 4.8 | 4.8 | 4.8 |
| All red [s] | 1.0 | 1.0 | 0.0 | 1.0 | 1.0 | 0.0 | 1.0 | 1.0 | 0.0 | 1.0 | 1.0 | 1.0 |
| Split [s] | 18 | 45 | 0 | 27 | 54 | 0 | 19 | 29 | 0 | 19 | 29 | 29 |
| Vehicle Extension [s] | 3.0 | 3.0 | 0.0 | 3.0 | 3.0 | 0.0 | 3.0 | 3.0 | 0.0 | 3.0 | 3.0 | 3.0 |
| Walk [s] | 0 | 7 | 0 | 0 | 7 | 0 | 0 | 5 | 0 | 0 | 5 | 5 |
| Pedestrian Clearance [s] | 0 | 22 | 0 | 0 | 20 | 0 | 0 | 10 | 0 | 0 | 10 | 10 |
| I1, Start-Up Lost Time [s] | 2.0 | 2.0 | 0.0 | 2.0 | 2.0 | 0.0 | 2.0 | 2.0 | 0.0 | 2.0 | 2.0 | 2.0 |
| I2, Clearance Lost Time [s] | 4.2 | 4.2 | 0.0 | 3.4 | 3.4 | 0.0 | 3.8 | 3.8 | 0.0 | 3.8 | 3.8 | 3.8 |
| Minimum Recall | No | No | | No | No | | No | No | | No | No | No |
| Maximum Recall | No | No | | No | No | | No | No | | No | No | No |
| Pedestrian Recall | No | No | | No | No | | No | No | | No | No | No |
| Detector Location [ft] | 0.0 | 0.0 | 0.0 | 0.0 | 0.0 | 0.0 | 0.0 | 0.0 | 0.0 | 0.0 | 0.0 | 0.0 |
| Detector Length [ft] | 0.0 | 0.0 | 0.0 | 0.0 | 0.0 | 0.0 | 0.0 | 0.0 | 0.0 | 0.0 | 0.0 | 0.0 |
| I, Upstream Filtering Factor | 1.00 | 1.00 | 1.00 | 1.00 | 1.00 | 1.00 | 1.00 | 1.00 | 1.00 | 1.00 | 1.00 | 1.00 |

**Exclusive Pedestrian Phase**

| | |
|---|---|
| Pedestrian Signal Group | 0 |
| Pedestrian Walk [s] | 0 |
| Pedestrian Clearance [s] | 0 |

**Lane Group Calculations**

| Lane Group | L | C | R | L | C | C | L | C | R | L | C | R |
|---|---|---|---|---|---|---|---|---|---|---|---|---|
| L, Total Lost Time per Cycle [s] | 6.20 | 6.20 | 6.20 | 5.40 | 5.40 | 5.40 | 5.80 | 5.80 | 5.80 | 5.80 | 5.80 | 5.40 |
| l1_p, Permitted Start-Up Lost Time [s] | 0.00 | 0.00 | 0.00 | 0.00 | 0.00 | 0.00 | 0.00 | 0.00 | 0.00 | 0.00 | 0.00 | 0.00 |
| l2, Clearance Lost Time [s] | 4.20 | 4.20 | 4.20 | 3.40 | 3.40 | 3.40 | 3.80 | 3.80 | 3.80 | 3.80 | 3.80 | 0.00 |
| g_i, Effective Green Time [s] | 11 | 40 | 40 | 22 | 50 | 50 | 13 | 22 | 22 | 13 | 22 | 50 |
| g / C, Green / Cycle | 0.09 | 0.33 | 0.33 | 0.18 | 0.42 | 0.42 | 0.11 | 0.19 | 0.19 | 0.11 | 0.19 | 0.42 |
| (v / s)_i Volume / Saturation Flow Rate | 0.08 | 0.22 | 0.17 | 0.16 | 0.22 | 0.22 | 0.09 | 0.17 | 0.12 | 0.10 | 0.12 | 0.26 |
| s, saturation flow rate [veh/h] | 3445 | 5074 | 1583 | 3445 | 3547 | 1739 | 3445 | 3547 | 1583 | 3445 | 3547 | 2802 |
| c, Capacity [veh/h] | 323 | 1678 | 524 | 620 | 1479 | 725 | 378 | 659 | 294 | 380 | 660 | 1162 |
| d1, Uniform Delay [s] | 51.61 | 28.16 | 26.64 | 44.43 | 19.30 | 19.31 | 52.52 | 47.98 | 45.42 | 52.91 | 45.10 | 27.70 |
| k, delay calibration | 0.11 | 0.50 | 0.50 | 0.11 | 0.50 | 0.50 | 0.11 | 0.11 | 0.15 | 0.11 | 0.11 | 0.20 |
| I, Upstream Filtering Factor | 1.00 | 1.00 | 1.00 | 1.00 | 1.00 | 1.00 | 1.00 | 1.00 | 1.00 | 1.00 | 1.00 | 1.00 |
| d2, Incremental Delay [s] | 5.62 | 2.00 | 3.65 | 4.50 | 1.40 | 2.84 | 5.76 | 5.74 | 3.55 | 9.72 | 1.03 | 1.01 |
| d3, Initial Queue Delay [s] | 0.00 | 0.00 | 0.00 | 0.00 | 0.00 | 0.00 | 0.00 | 0.00 | 0.00 | 0.00 | 0.00 | 0.00 |
| Rp, platoon ratio | 1.33 | 1.33 | 1.33 | 1.33 | 1.33 | 1.33 | 1.00 | 1.00 | 1.00 | 1.00 | 1.00 | 1.00 |
| PF, progression factor | 1.00 | 1.00 | 1.00 | 1.00 | 1.00 | 1.00 | 1.00 | 1.00 | 1.00 | 1.00 | 1.00 | 1.00 |

**Lane Group Results**

| | | | | | | | | | | | | |
|---|---|---|---|---|---|---|---|---|---|---|---|---|
| X, volume / capacity | 0.83 | 0.65 | 0.52 | 0.89 | 0.54 | 0.54 | 0.86 | 0.92 | 0.67 | 0.92 | 0.64 | 0.62 |
| d, Delay for Lane Group [s/veh] | 57.23 | 30.16 | 30.29 | 48.93 | 20.69 | 22.15 | 58.28 | 53.72 | 48.97 | 62.63 | 46.13 | 28.70 |
| Lane Group LOS | E | C | C | D | C | C | E | D | D | E | D | C |
| Critical Lane Group | No | Yes | No | Yes | No | No | Yes | No | No | No | No | Yes |
| 50th-Percentile Queue Length [veh] | 3.96 | 7.30 | 5.45 | 7.68 | 6.15 | 6.34 | 4.99 | 9.12 | 5.56 | 5.61 | 5.72 | 7.90 |
| 50th-Percentile Queue Length [ft] | 99.10 | 182.46 | 136.26 | 192.12 | 153.81 | 158.54 | 124.73 | 227.99 | 139.03 | 140.34 | 142.97 | 197.42 |
| 95th-Percentile Queue Length [veh] | 7.14 | 11.73 | 9.28 | 12.23 | 10.22 | 10.47 | 8.65 | 14.07 | 9.43 | 9.50 | 9.64 | 12.51 |
| 95th-Percentile Queue Length [ft] | 178.38 | 293.22 | 231.99 | 305.78 | 255.51 | 261.78 | 216.31 | 351.81 | 235.71 | 237.48 | 241.02 | 312.64 |

**Movement, Approach, & Intersection Results**

| | | | | | | | | | | | | |
|---|---|---|---|---|---|---|---|---|---|---|---|---|
| d_M, Delay for Movement [s/veh] | 57.23 | 30.16 | 30.29 | 48.93 | 21.03 | 22.15 | 58.28 | 53.72 | 48.97 | 62.63 | 46.13 | 28.70 |
| Movement LOS | E | C | C | D | C | C | E | D | D | E | D | C |
| d_A, Approach Delay [s/veh] | 34.63 | | | 29.98 | | | 54.21 | | | 41.60 | | |
| Approach LOS | C | | | C | | | D | | | D | | |
| d_I, Intersection Delay [s/veh] | 38.70 | | | | | | | | | | | |
| Intersection LOS | D | | | | | | | | | | | |
| Intersection V/C | 0.781 | | | | | | | | | | | |

## Sequence

| | | | | | | | | | | | | | | | | |
|---|---|---|---|---|---|---|---|---|---|---|---|---|---|---|---|---|
| Ring 1 | 1 | 2 | 3 | 4 | - | - | - | - | - | - | - | - | - | - | - | - |
| Ring 2 | 5 | 6 | 7 | 8 | - | - | - | - | - | - | - | - | - | - | - | - |
| Ring 3 | - | - | - | - | - | - | - | - | - | - | - | - | - | - | - | - |
| Ring 4 | - | - | - | - | - | - | - | - | - | - | - | - | - | - | - | - |

**Intersection Level Of Service Report**
**Intersection 5: Palmetto Ave (NS) / Valley Blvd (EW)**

| | | | |
|---|---|---|---|
| Control Type: | Signalized | Delay (sec / veh): | 20.5 |
| Analysis Method: | HCM 2010 | Level Of Service: | C |
| Analysis Period: | 15 minutes | Volume to Capacity (v/c): | 0.571 |

**Intersection Setup**

| Name | Palmetto Avenue | | Valley Boulevard | | Valley Boulevard | |
|---|---|---|---|---|---|---|
| Approach | Southbound | | Eastbound | | Westbound | |
| Lane Configuration | | | | | | |
| Turning Movement | Left | Right | Left | Thru | Thru | Right |
| Lane Width [ft] | 12.00 | 12.00 | 12.00 | 12.00 | 12.00 | 12.00 |
| No. of Lanes in Pocket | 0 | 0 | 1 | 0 | 0 | 0 |
| Pocket Length [ft] | 100.00 | 100.00 | 150.00 | 100.00 | 100.00 | 100.00 |
| Speed [mph] | 35.00 | | 40.00 | | 40.00 | |
| Grade [%] | 0.00 | | 0.00 | | 0.00 | |
| Crosswalk | Yes | | Yes | | No | |

**volumes**

| Name | Palmetto Avenue | | Valley Boulevard | | Valley Boulevard | |
|---|---|---|---|---|---|---|
| Base Volume Input [veh/h] | 115 | 165 | 346 | 1024 | 436 | 104 |
| Base Volume Adjustment Factor | 1.0000 | 1.0000 | 1.0000 | 1.0000 | 1.0000 | 1.0000 |
| Heavy Vehicles Percentage [%] | 2.00 | 2.00 | 4.00 | 4.00 | 4.00 | 4.00 |
| Growth Rate | 1.00 | 1.00 | 1.00 | 1.00 | 1.00 | 1.00 |
| In-Process Volume [veh/h] | 0 | 0 | 0 | 0 | 0 | 0 |
| Site-Generated Trips [veh/h] | 0 | 0 | 0 | 0 | 0 | 0 |
| Diverted Trips [veh/h] | 0 | 0 | 0 | 0 | 0 | 0 |
| Pass-by Trips [veh/h] | 0 | 0 | 0 | 0 | 0 | 0 |
| Existing Site Adjustment Volume [veh/h] | 0 | 0 | 0 | 0 | 0 | 0 |
| Other Volume [veh/h] | 0 | 0 | 0 | 0 | 0 | 0 |
| Right-Turn on Red Volume [veh/h] | 0 | 0 | 0 | 0 | 0 | 0 |
| Total Hourly Volume [veh/h] | 115 | 165 | 346 | 1024 | 436 | 104 |
| Peak Hour Factor | 0.9270 | 0.9270 | 0.9270 | 0.9270 | 0.9270 | 0.9270 |
| Other Adjustment Factor | 1.0000 | 1.0000 | 1.0000 | 1.0000 | 1.0000 | 1.0000 |
| Total 15-Minute Volume [veh/h] | 31 | 44 | 93 | 276 | 118 | 28 |
| Total Analysis Volume [veh/h] | 124 | 178 | 373 | 1105 | 470 | 112 |
| Presence of On-Street Parking | No | No | No | No | No | No |
| On-Street Parking Maneuver Rate [/h] | 0 | 0 | 0 | 0 | 0 | 0 |
| Local Bus Stopping Rate [/h] | 0 | 0 | 0 | 0 | 0 | 0 |
| Pedestrian Volume [ped/h] | 0 | | 0 | | 0 | |
| Bicycle Volume [bicycles/h] | 0 | | 0 | | 0 | |

**Intersection Settings**

| | |
|---|---|
| Located in CBD | No |
| Signal Coordination Group | 3 - EW - Valley |
| Cycle Length [s] | 120 |
| Coordination Type | Time of Day Pattern Coordinated |
| Actuation Type | Fully actuated |
| Offset [s] | 0.0 |
| Offset Reference | LagFO |
| Permissive Mode | SingleBand |
| Lost time [s] | 12.00 |

**Phasing & Timing**

| Control Type | Split | Split | Protected | Permissive | Permissive | Permissive |
|---|---|---|---|---|---|---|
| Signal group | 1 | 0 | 3 | 8 | 4 | 0 |
| Auxiliary Signal Groups | | | | | | |
| Lead / Lag | Lead | - | Lead | - | - | - |
| Minimum Green [s] | 5 | 0 | 5 | 5 | 5 | 0 |
| Maximum Green [s] | 30 | 0 | 30 | 30 | 30 | 0 |
| Amber [s] | 4.1 | 0.0 | 4.4 | 4.4 | 4.4 | 0.0 |
| All red [s] | 1.0 | 0.0 | 1.0 | 1.0 | 1.0 | 0.0 |
| Split [s] | 39 | 0 | 45 | 81 | 36 | 0 |
| Vehicle Extension [s] | 3.0 | 0.0 | 3.0 | 3.0 | 3.0 | 0.0 |
| Walk [s] | 7 | 0 | 0 | 7 | 7 | 0 |
| Pedestrian Clearance [s] | 26 | 0 | 0 | 17 | 17 | 0 |
| I1, Start-Up Lost Time [s] | 2.0 | 0.0 | 2.0 | 2.0 | 2.0 | 0.0 |
| I2, Clearance Lost Time [s] | 3.1 | 0.0 | 3.4 | 3.4 | 3.4 | 0.0 |
| Minimum Recall | No | | No | No | No | |
| Maximum Recall | No | | No | No | No | |
| Pedestrian Recall | No | | No | No | No | |
| Detector Location [ft] | 0.0 | 0.0 | 0.0 | 0.0 | 0.0 | 0.0 |
| Detector Length [ft] | 0.0 | 0.0 | 0.0 | 0.0 | 0.0 | 0.0 |
| I, Upstream Filtering Factor | 1.00 | 1.00 | 1.00 | 1.00 | 1.00 | 1.00 |

**Exclusive Pedestrian Phase**

| | |
|---|---|
| Pedestrian Signal Group | 0 |
| Pedestrian Walk [s] | 0 |
| Pedestrian Clearance [s] | 0 |

**Lane Group Calculations**

| Lane Group | C | L | C | C | C |
|---|---|---|---|---|---|
| L, Total Lost Time per Cycle [s] | 5.10 | 5.40 | 5.40 | 5.40 | 5.40 |
| l1_p, Permitted Start-Up Lost Time [s] | 0.00 | 0.00 | 0.00 | 0.00 | 0.00 |
| l2, Clearance Lost Time [s] | 3.10 | 3.40 | 3.40 | 3.40 | 3.40 |
| g_i, Effective Green Time [s] | 24 | 28 | 86 | 52 | 52 |
| g / C, Green / Cycle | 0.20 | 0.23 | 0.71 | 0.44 | 0.44 |
| (v / s)_i Volume / Saturation Flow Rate | 0.18 | 0.21 | 0.32 | 0.11 | 0.12 |
| s, saturation flow rate [veh/h] | 1656 | 1740 | 3478 | 3478 | 1658 |
| c, Capacity [veh/h] | 331 | 402 | 2480 | 1519 | 724 |
| d1, Uniform Delay [s] | 46.98 | 40.51 | 0.94 | 15.49 | 15.57 |
| k, delay calibration | 0.18 | 0.11 | 0.50 | 0.50 | 0.50 |
| I, Upstream Filtering Factor | 1.00 | 1.00 | 1.00 | 1.00 | 1.00 |
| d2, Incremental Delay [s] | 14.88 | 9.54 | 0.58 | 0.41 | 0.91 |
| d3, Initial Queue Delay [s] | 0.00 | 0.00 | 0.00 | 0.00 | 0.00 |
| Rp, platoon ratio | 1.00 | 1.33 | 1.33 | 1.33 | 1.33 |
| PF, progression factor | 1.00 | 1.00 | 1.00 | 1.00 | 1.00 |

**Lane Group Results**

| | | | | | |
|---|---|---|---|---|---|
| X, volume / capacity | 0.91 | 0.93 | 0.45 | 0.26 | 0.27 |
| d, Delay for Lane Group [s/veh] | 61.86 | 50.04 | 1.52 | 15.90 | 16.48 |
| Lane Group LOS | E | D | A | B | B |
| Critical Lane Group | Yes | Yes | No | No | Yes |
| 50th-Percentile Queue Length [veh] | 10.07 | 10.78 | 0.83 | 2.51 | 2.62 |
| 50th-Percentile Queue Length [ft] | 251.69 | 269.46 | 20.78 | 62.73 | 65.42 |
| 95th-Percentile Queue Length [veh] | 15.27 | 16.16 | 1.50 | 4.52 | 4.71 |
| 95th-Percentile Queue Length [ft] | 381.79 | 404.06 | 37.41 | 112.92 | 117.76 |

**Movement, Approach, & Intersection Results**

| | | | | | | |
|---|---|---|---|---|---|---|
| d_M, Delay for Movement [s/veh] | 61.86 | 61.86 | 50.04 | 1.52 | 16.00 | 16.48 |
| Movement LOS | E | E | D | A | B | B |
| d_A, Approach Delay [s/veh] | 61.86 | | 13.76 | | 16.09 | |
| Approach LOS | E | | B | | B | |
| d_I, Intersection Delay [s/veh] | 20.49 | | | | | |
| Intersection LOS | C | | | | | |
| Intersection V/C | 0.571 | | | | | |

## Sequence

| | | | | | | | | | | | | | | | | |
|---|---|---|---|---|---|---|---|---|---|---|---|---|---|---|---|---|
| Ring 1 | 1 | 3 | 4 | - | - | - | - | - | - | - | - | - | - | - | - | - |
| Ring 2 | - | - | 8 | - | - | - | - | - | - | - | - | - | - | - | - | - |
| Ring 3 | - | - | - | - | - | - | - | - | - | - | - | - | - | - | - | - |
| Ring 4 | - | - | - | - | - | - | - | - | - | - | - | - | - | - | - | - |

**Intersection Level Of Service Report**
**Intersection 6: Alder Ave (NS) / San Bernardino Ave (EW)**

| | | | |
|---|---|---|---|
| Control Type: | Signalized | Delay (sec / veh): | 22.2 |
| Analysis Method: | HCM 2010 | Level Of Service: | C |
| Analysis Period: | 15 minutes | Volume to Capacity (v/c): | 0.668 |

**Intersection Setup**

| Name | Alder Avenue | | | Alder Avenue | | | San Bernardino Avenue | | | San Bernardino Avenue | | |
|---|---|---|---|---|---|---|---|---|---|---|---|---|
| Approach | Northbound | | | Southbound | | | Eastbound | | | Westbound | | |
| Lane Configuration | | | | | | | | | | | | |
| Turning Movement | Left | Thru | Right | Left | Thru | Right | Left | Thru | Right | Left | Thru | Right |
| Lane Width [ft] | 12.00 | 12.00 | 12.00 | 12.00 | 12.00 | 12.00 | 12.00 | 12.00 | 12.00 | 12.00 | 12.00 | 12.00 |
| No. of Lanes in Pocket | 1 | 0 | 0 | 1 | 0 | 0 | 1 | 0 | 0 | 1 | 0 | 0 |
| Pocket Length [ft] | 100.00 | 100.00 | 100.00 | 100.00 | 100.00 | 100.00 | 100.00 | 100.00 | 100.00 | 80.00 | 100.00 | 100.00 |
| Speed [mph] | 40.00 | | | 40.00 | | | 35.00 | | | 35.00 | | |
| Grade [%] | 0.00 | | | 0.00 | | | 0.00 | | | 0.00 | | |
| Crosswalk | Yes | | | Yes | | | Yes | | | Yes | | |

**volumes**

| Name | Alder Avenue | | | Alder Avenue | | | San Bernardino Avenue | | | San Bernardino Avenue | | |
|---|---|---|---|---|---|---|---|---|---|---|---|---|
| Base Volume Input [veh/h] | 99 | 620 | 181 | 38 | 354 | 38 | 48 | 281 | 81 | 104 | 273 | 23 |
| Base Volume Adjustment Factor | 1.0000 | 1.0000 | 1.0000 | 1.0000 | 1.0000 | 1.0000 | 1.0000 | 1.0000 | 1.0000 | 1.0000 | 1.0000 | 1.0000 |
| Heavy Vehicles Percentage [%] | 2.00 | 2.00 | 2.00 | 2.00 | 2.00 | 2.00 | 2.00 | 2.00 | 2.00 | 2.00 | 2.00 | 2.00 |
| Growth Rate | 1.00 | 1.00 | 1.00 | 1.00 | 1.00 | 1.00 | 1.00 | 1.00 | 1.00 | 1.00 | 1.00 | 1.00 |
| In-Process Volume [veh/h] | 0 | 0 | 0 | 0 | 0 | 0 | 0 | 0 | 0 | 0 | 0 | 0 |
| Site-Generated Trips [veh/h] | 0 | 0 | 0 | 0 | 0 | 0 | 0 | 0 | 0 | 0 | 0 | 0 |
| Diverted Trips [veh/h] | 0 | 0 | 0 | 0 | 0 | 0 | 0 | 0 | 0 | 0 | 0 | 0 |
| Pass-by Trips [veh/h] | 0 | 0 | 0 | 0 | 0 | 0 | 0 | 0 | 0 | 0 | 0 | 0 |
| Existing Site Adjustment Volume [veh/h] | 0 | 0 | 0 | 0 | 0 | 0 | 0 | 0 | 0 | 0 | 0 | 0 |
| Other Volume [veh/h] | 0 | 0 | 0 | 0 | 0 | 0 | 0 | 0 | 0 | 0 | 0 | 0 |
| Right-Turn on Red Volume [veh/h] | 0 | 0 | 0 | 0 | 0 | 0 | 0 | 0 | 0 | 0 | 0 | 0 |
| Total Hourly Volume [veh/h] | 99 | 620 | 181 | 38 | 354 | 38 | 48 | 281 | 81 | 104 | 273 | 23 |
| Peak Hour Factor | 0.8530 | 0.8530 | 0.8530 | 0.8530 | 0.8530 | 0.8530 | 0.8530 | 0.8530 | 0.8530 | 0.8530 | 0.8530 | 0.8530 |
| Other Adjustment Factor | 1.0000 | 1.0000 | 1.0000 | 1.0000 | 1.0000 | 1.0000 | 1.0000 | 1.0000 | 1.0000 | 1.0000 | 1.0000 | 1.0000 |
| Total 15-Minute Volume [veh/h] | 29 | 182 | 53 | 11 | 104 | 11 | 14 | 82 | 24 | 30 | 80 | 7 |
| Total Analysis Volume [veh/h] | 116 | 727 | 212 | 45 | 415 | 45 | 56 | 329 | 95 | 122 | 320 | 27 |
| Presence of On-Street Parking | No | | No | No | | No | No | | No | No | | No |
| On-Street Parking Maneuver Rate [/h] | 0 | 0 | 0 | 0 | 0 | 0 | 0 | 0 | 0 | 0 | 0 | 0 |
| Local Bus Stopping Rate [/h] | 0 | 0 | 0 | 0 | 0 | 0 | 0 | 0 | 0 | 0 | 0 | 0 |
| Pedestrian Volume [ped/h] | 0 | | | 0 | | | 0 | | | 0 | | |
| Bicycle Volume [bicycles/h] | 0 | | | 0 | | | 0 | | | 0 | | |

**Intersection Settings**

| | |
|---|---|
| Located in CBD | No |
| Signal Coordination Group | - |
| Cycle Length [s] | 100 |
| Coordination Type | Time of Day Pattern Isolated |
| Actuation Type | Fully actuated |
| Offset [s] | 0.0 |
| Offset Reference | LagFO |
| Permissive Mode | SingleBand |
| Lost time [s] | 16.00 |

**Phasing & Timing**

| Control Type | Protecte | Permiss | Permiss | Protecte | Permiss | Permiss | Protecte | Permiss | Permiss | Protecte | Permiss | Permiss |
|---|---|---|---|---|---|---|---|---|---|---|---|---|
| Signal group | 5 | 2 | 0 | 1 | 6 | 0 | 3 | 8 | 0 | 7 | 4 | 0 |
| Auxiliary Signal Groups | | | | | | | | | | | | |
| Lead / Lag | Lead | - | - | Lead | - | - | Lead | - | - | Lead | - | - |
| Minimum Green [s] | 5 | 5 | 0 | 5 | 5 | 0 | 5 | 5 | 0 | 5 | 5 | 0 |
| Maximum Green [s] | 30 | 30 | 0 | 30 | 30 | 0 | 30 | 30 | 0 | 30 | 30 | 0 |
| Amber [s] | 4.4 | 4.4 | 0.0 | 4.4 | 4.4 | 0.0 | 4.1 | 4.1 | 0.0 | 4.1 | 4.1 | 0.0 |
| All red [s] | 1.0 | 1.0 | 0.0 | 1.0 | 1.0 | 0.0 | 1.0 | 1.0 | 0.0 | 1.0 | 1.0 | 0.0 |
| Split [s] | 12 | 39 | 0 | 11 | 38 | 0 | 11 | 37 | 0 | 13 | 39 | 0 |
| Vehicle Extension [s] | 3.0 | 3.0 | 0.0 | 3.0 | 3.0 | 0.0 | 3.0 | 3.0 | 0.0 | 3.0 | 3.0 | 0.0 |
| Walk [s] | 0 | 7 | 0 | 0 | 7 | 0 | 0 | 7 | 0 | 0 | 7 | 0 |
| Pedestrian Clearance [s] | 0 | 24 | 0 | 0 | 24 | 0 | 0 | 24 | 0 | 0 | 24 | 0 |
| I1, Start-Up Lost Time [s] | 2.0 | 2.0 | 0.0 | 2.0 | 2.0 | 0.0 | 2.0 | 2.0 | 0.0 | 2.0 | 2.0 | 0.0 |
| I2, Clearance Lost Time [s] | 3.4 | 3.4 | 0.0 | 3.4 | 3.4 | 0.0 | 3.1 | 3.1 | 0.0 | 3.1 | 3.1 | 0.0 |
| Minimum Recall | No | No | | No | No | | No | No | | No | No | |
| Maximum Recall | No | No | | No | No | | No | No | | No | No | |
| Pedestrian Recall | No | No | | No | No | | No | No | | No | No | |
| Detector Location [ft] | 0.0 | 0.0 | 0.0 | 0.0 | 0.0 | 0.0 | 0.0 | 0.0 | 0.0 | 0.0 | 0.0 | 0.0 |
| Detector Length [ft] | 0.0 | 0.0 | 0.0 | 0.0 | 0.0 | 0.0 | 0.0 | 0.0 | 0.0 | 0.0 | 0.0 | 0.0 |
| I, Upstream Filtering Factor | 1.00 | 1.00 | 1.00 | 1.00 | 1.00 | 1.00 | 1.00 | 1.00 | 1.00 | 1.00 | 1.00 | 1.00 |

**Exclusive Pedestrian Phase**

| | |
|---|---|
| Pedestrian Signal Group | 0 |
| Pedestrian Walk [s] | 0 |
| Pedestrian Clearance [s] | 0 |

**Lane Group Calculations**

| Lane Group | L | C | C | L | C | C | L | C | C | L | C | C |
|---|---|---|---|---|---|---|---|---|---|---|---|---|
| L, Total Lost Time per Cycle [s] | 5.40 | 5.40 | 5.40 | 5.40 | 5.40 | 5.40 | 5.10 | 5.10 | 5.10 | 5.10 | 5.10 | 5.10 |
| l1_p, Permitted Start-Up Lost Time [s] | 0.00 | 0.00 | 0.00 | 0.00 | 0.00 | 0.00 | 0.00 | 0.00 | 0.00 | 0.00 | 0.00 | 0.00 |
| l2, Clearance Lost Time [s] | 3.40 | 3.40 | 3.40 | 3.40 | 3.40 | 3.40 | 3.10 | 3.10 | 3.10 | 3.10 | 3.10 | 3.10 |
| g_i, Effective Green Time [s] | 5 | 18 | 18 | 3 | 15 | 15 | 3 | 9 | 9 | 5 | 11 | 11 |
| g / C, Green / Cycle | 0.09 | 0.32 | 0.32 | 0.05 | 0.28 | 0.28 | 0.05 | 0.17 | 0.17 | 0.09 | 0.21 | 0.21 |
| (v / s)_i Volume / Saturation Flow Rate | 0.07 | 0.26 | 0.26 | 0.03 | 0.13 | 0.13 | 0.03 | 0.12 | 0.12 | 0.07 | 0.09 | 0.09 |
| s, saturation flow rate [veh/h] | 1774 | 1863 | 1720 | 1774 | 1863 | 1800 | 1774 | 1863 | 1722 | 1774 | 1863 | 1812 |
| c, Capacity [veh/h] | 155 | 595 | 549 | 81 | 517 | 499 | 93 | 311 | 287 | 163 | 385 | 374 |
| d1, Uniform Delay [s] | 24.86 | 17.52 | 17.52 | 26.09 | 16.66 | 16.68 | 25.87 | 21.94 | 22.00 | 24.70 | 19.40 | 19.41 |
| k, delay calibration | 0.11 | 0.11 | 0.11 | 0.11 | 0.11 | 0.11 | 0.11 | 0.11 | 0.11 | 0.11 | 0.11 | 0.11 |
| I, Upstream Filtering Factor | 1.00 | 1.00 | 1.00 | 1.00 | 1.00 | 1.00 | 1.00 | 1.00 | 1.00 | 1.00 | 1.00 | 1.00 |
| d2, Incremental Delay [s] | 6.96 | 2.88 | 3.12 | 5.92 | 0.62 | 0.65 | 6.11 | 2.89 | 3.33 | 6.64 | 0.84 | 0.88 |
| d3, Initial Queue Delay [s] | 0.00 | 0.00 | 0.00 | 0.00 | 0.00 | 0.00 | 0.00 | 0.00 | 0.00 | 0.00 | 0.00 | 0.00 |
| Rp, platoon ratio | 1.00 | 1.00 | 1.00 | 1.00 | 1.00 | 1.00 | 1.00 | 1.00 | 1.00 | 1.00 | 1.00 | 1.00 |
| PF, progression factor | 1.00 | 1.00 | 1.00 | 1.00 | 1.00 | 1.00 | 1.00 | 1.00 | 1.00 | 1.00 | 1.00 | 1.00 |

**Lane Group Results**

| | | | | | | | | | | | | |
|---|---|---|---|---|---|---|---|---|---|---|---|---|
| X, volume / capacity | 0.75 | 0.82 | 0.82 | 0.56 | 0.45 | 0.45 | 0.60 | 0.70 | 0.72 | 0.75 | 0.46 | 0.46 |
| d, Delay for Lane Group [s/veh] | 31.82 | 20.40 | 20.64 | 32.01 | 17.28 | 17.33 | 31.98 | 24.83 | 25.33 | 31.34 | 20.24 | 20.29 |
| Lane Group LOS | C | C | C | C | B | B | C | C | C | C | C | C |
| Critical Lane Group | No | No | Yes | Yes | No | No | No | No | Yes | Yes | No | No |
| 50th-Percentile Queue Length [veh] | 1.64 | 5.23 | 4.87 | 0.66 | 2.18 | 2.13 | 0.83 | 2.67 | 2.55 | 1.73 | 1.86 | 1.83 |
| 50th-Percentile Queue Length [ft] | 40.94 | 130.81 | 121.78 | 16.50 | 54.42 | 53.14 | 20.63 | 66.64 | 63.74 | 43.33 | 46.58 | 45.76 |
| 95th-Percentile Queue Length [veh] | 2.95 | 8.98 | 8.49 | 1.19 | 3.92 | 3.83 | 1.49 | 4.80 | 4.59 | 3.12 | 3.35 | 3.29 |
| 95th-Percentile Queue Length [ft] | 73.69 | 224.59 | 212.27 | 29.70 | 97.96 | 95.65 | 37.14 | 119.95 | 114.74 | 77.99 | 83.84 | 82.36 |

**Movement, Approach, & Intersection Results**

| | | | | | | | | | | | | |
|---|---|---|---|---|---|---|---|---|---|---|---|---|
| d_M, Delay for Movement [s/veh] | 31.82 | 20.48 | 20.64 | 32.01 | 17.30 | 17.33 | 31.98 | 25.00 | 25.33 | 31.34 | 20.26 | 20.29 |
| Movement LOS | C | C | C | C | B | B | C | C | C | C | C | C |
| d_A, Approach Delay [s/veh] | 21.76 | | | 18.61 | | | 25.88 | | | 23.15 | | |
| Approach LOS | C | | | B | | | C | | | C | | |
| d_I, Intersection Delay [s/veh] | 22.17 | | | | | | | | | | | |
| Intersection LOS | C | | | | | | | | | | | |
| Intersection V/C | 0.668 | | | | | | | | | | | |

## Sequence

| | | | | | | | | | | | | | | | | |
|---|---|---|---|---|---|---|---|---|---|---|---|---|---|---|---|---|
| Ring 1 | 1 | 2 | 3 | 4 | - | - | - | - | - | - | - | - | - | - | - | - |
| Ring 2 | 5 | 6 | 7 | 8 | - | - | - | - | - | - | - | - | - | - | - | - |
| Ring 3 | - | - | - | - | - | - | - | - | - | - | - | - | - | - | - | - |
| Ring 4 | - | - | - | - | - | - | - | - | - | - | - | - | - | - | - | - |

**Intersection Level Of Service Report**
**Intersection 7: Alder Ave (NS) / Marygold Ave (EW)**

| | | | |
|---|---|---|---|
| Control Type: | All-way stop | Delay (sec / veh): | 175.6 |
| Analysis Method: | HCM 2010 | Level Of Service: | F |
| Analysis Period: | 15 minutes | | |

**Intersection Setup**

| Name | Alder Avenue | | | Alder Avenue | | | Marygold Avenue | | | Marygold Avenue | | |
|---|---|---|---|---|---|---|---|---|---|---|---|---|
| Approach | Northbound | | | Southbound | | | Eastbound | | | Westbound | | |
| Lane Configuration | | | | | | | | | | | | |
| Turning Movement | Left | Thru | Right | Left | Thru | Right | Left | Thru | Right | Left | Thru | Right |
| Lane Width [ft] | 12.00 | 12.00 | 12.00 | 12.00 | 12.00 | 12.00 | 12.00 | 12.00 | 12.00 | 12.00 | 12.00 | 12.00 |
| No. of Lanes in Pocket | 0 | 0 | 1 | 0 | 0 | 0 | 0 | 0 | 0 | 0 | 0 | 0 |
| Pocket Length [ft] | 100.00 | 100.00 | 200.00 | 100.00 | 100.00 | 100.00 | 100.00 | 100.00 | 100.00 | 100.00 | 100.00 | 100.00 |
| Speed [mph] | 40.00 | | | 40.00 | | | 35.00 | | | 25.00 | | |
| Grade [%] | 0.00 | | | 0.00 | | | 0.00 | | | 0.00 | | |
| Crosswalk | Yes | | | Yes | | | Yes | | | Yes | | |

**volumes**

| Name | Alder Avenue | | | Alder Avenue | | | Marygold Avenue | | | Marygold Avenue | | |
|---|---|---|---|---|---|---|---|---|---|---|---|---|
| Base Volume Input [veh/h] | 55 | 734 | 48 | 23 | 481 | 106 | 190 | 57 | 33 | 22 | 19 | 6 |
| Base Volume Adjustment Factor | 1.0000 | 1.0000 | 1.0000 | 1.0000 | 1.0000 | 1.0000 | 1.0000 | 1.0000 | 1.0000 | 1.0000 | 1.0000 | 1.0000 |
| Heavy Vehicles Percentage [%] | 2.00 | 2.00 | 2.00 | 2.00 | 2.00 | 2.00 | 2.00 | 2.00 | 2.00 | 2.00 | 2.00 | 2.00 |
| Growth Rate | 1.00 | 1.00 | 1.00 | 1.00 | 1.00 | 1.00 | 1.00 | 1.00 | 1.00 | 1.00 | 1.00 | 1.00 |
| In-Process Volume [veh/h] | 0 | 0 | 0 | 0 | 0 | 0 | 0 | 0 | 0 | 0 | 0 | 0 |
| Site-Generated Trips [veh/h] | 0 | 0 | 0 | 0 | 0 | 0 | 0 | 0 | 0 | 0 | 0 | 0 |
| Diverted Trips [veh/h] | 0 | 0 | 0 | 0 | 0 | 0 | 0 | 0 | 0 | 0 | 0 | 0 |
| Pass-by Trips [veh/h] | 0 | 0 | 0 | 0 | 0 | 0 | 0 | 0 | 0 | 0 | 0 | 0 |
| Existing Site Adjustment Volume [veh/h] | 0 | 0 | 0 | 0 | 0 | 0 | 0 | 0 | 0 | 0 | 0 | 0 |
| Other Volume [veh/h] | 0 | 0 | 0 | 0 | 0 | 0 | 0 | 0 | 0 | 0 | 0 | 0 |
| Total Hourly Volume [veh/h] | 55 | 734 | 48 | 23 | 481 | 106 | 190 | 57 | 33 | 22 | 19 | 6 |
| Peak Hour Factor | 0.9220 | 0.9220 | 0.9220 | 0.9220 | 0.9220 | 0.9220 | 0.9220 | 0.9220 | 0.9220 | 0.9220 | 0.9220 | 0.9220 |
| Other Adjustment Factor | 1.0000 | 1.0000 | 1.0000 | 1.0000 | 1.0000 | 1.0000 | 1.0000 | 1.0000 | 1.0000 | 1.0000 | 1.0000 | 1.0000 |
| Total 15-Minute Volume [veh/h] | 15 | 199 | 13 | 6 | 130 | 29 | 52 | 15 | 9 | 6 | 5 | 2 |
| Total Analysis Volume [veh/h] | 60 | 796 | 52 | 25 | 522 | 115 | 206 | 62 | 36 | 24 | 21 | 7 |
| Pedestrian Volume [ped/h] | 0 | | | 0 | | | 0 | | | 0 | | |

**Intersection Settings**

**Lanes**

**Movement, Approach, & Intersection Results**

| | | | | | | |
|---|---|---|---|---|---|---|
| 95th-Percentile Queue Length [veh] | 49.70 | 0.30 | 16.46 | 0.74 | 4.16 | 0.42 |
| 95th-Percentile Queue Length [ft] | 1242.56 | 7.50 | 411.49 | 18.53 | 103.96 | 10.47 |
| Approach Delay [s/veh] | 313.11 | | 70.51 | | 21.61 | 12.75 |
| Approach LOS | F | | F | | C | B |
| Intersection Delay [s/veh] | 175.60 | | | | | |
| Intersection LOS | F | | | | | |

**Intersection Level Of Service Report**
**Intersection 8: Alder Ave (NS) / Valley Blvd (EW)**

| | | | |
|---|---|---|---|
| Control Type: | Signalized | Delay (sec / veh): | 574.9 |
| Analysis Method: | HCM 2010 | Level Of Service: | F |
| Analysis Period: | 15 minutes | Volume to Capacity (v/c): | 8.971 |

**Intersection Setup**

| Name | Alder Avenue | | | Alder Avenue | | | Valley Boulevard | | | | | |
|---|---|---|---|---|---|---|---|---|---|---|---|---|
| Approach | Northbound | | | Southbound | | | Eastbound | | | Westbound | | |
| Lane Configuration | | | | | | | | | | | | |
| Turning Movement | Left | Thru | Right | Left | Thru | Right | Left | Thru | Right | Left | Thru | Right |
| Lane Width [ft] | 12.00 | 12.00 | 12.00 | 12.00 | 12.00 | 12.00 | 12.00 | 12.00 | 12.00 | 12.00 | 12.00 | 12.00 |
| No. of Lanes in Pocket | 0 | 0 | 1 | 0 | 0 | 0 | 1 | 0 | 0 | 1 | 0 | 0 |
| Pocket Length [ft] | 100.00 | 100.00 | 55.00 | 100.00 | 100.00 | 100.00 | 100.00 | 100.00 | 100.00 | 100.00 | 100.00 | 100.00 |
| Speed [mph] | 40.00 | | | 40.00 | | | 40.00 | | | 30.00 | | |
| Grade [%] | 0.00 | | | 0.00 | | | 0.00 | | | 0.00 | | |
| Crosswalk | Yes | | | Yes | | | Yes | | | Yes | | |

**volumes**

| Name | Alder Avenue | | | Alder Avenue | | | Valley Boulevard | | | | | |
|---|---|---|---|---|---|---|---|---|---|---|---|---|
| Base Volume Input [veh/h] | 429 | 432 | 269 | 160 | 295 | 45 | 174 | 470 | 396 | 147 | 405 | 215 |
| Base Volume Adjustment Factor | 1.0000 | 1.0000 | 1.0000 | 1.0000 | 1.0000 | 1.0000 | 1.0000 | 1.0000 | 1.0000 | 1.0000 | 1.0000 | 1.0000 |
| Heavy Vehicles Percentage [%] | 2.00 | 2.00 | 2.00 | 2.00 | 2.00 | 2.00 | 4.00 | 4.00 | 4.00 | 4.00 | 4.00 | 4.00 |
| Growth Rate | 1.00 | 1.00 | 1.00 | 1.00 | 1.00 | 1.00 | 1.00 | 1.00 | 1.00 | 1.00 | 1.00 | 1.00 |
| In-Process Volume [veh/h] | 0 | 0 | 0 | 0 | 0 | 0 | 0 | 0 | 0 | 0 | 0 | 0 |
| Site-Generated Trips [veh/h] | 0 | 0 | 0 | 0 | 0 | 0 | 0 | 0 | 0 | 0 | 0 | 0 |
| Diverted Trips [veh/h] | 0 | 0 | 0 | 0 | 0 | 0 | 0 | 0 | 0 | 0 | 0 | 0 |
| Pass-by Trips [veh/h] | 0 | 0 | 0 | 0 | 0 | 0 | 0 | 0 | 0 | 0 | 0 | 0 |
| Existing Site Adjustment Volume [veh/h] | 0 | 0 | 0 | 0 | 0 | 0 | 0 | 0 | 0 | 0 | 0 | 0 |
| Other Volume [veh/h] | 0 | 0 | 0 | 0 | 0 | 0 | 0 | 0 | 0 | 0 | 0 | 0 |
| Right-Turn on Red Volume [veh/h] | 0 | 0 | 0 | 0 | 0 | 0 | 0 | 0 | 0 | 0 | 0 | 0 |
| Total Hourly Volume [veh/h] | 429 | 432 | 269 | 160 | 295 | 45 | 174 | 470 | 396 | 147 | 405 | 215 |
| Peak Hour Factor | 0.8890 | 0.8890 | 0.8890 | 0.8890 | 0.8890 | 0.8890 | 0.8890 | 0.8890 | 0.8890 | 0.8890 | 0.8890 | 0.8890 |
| Other Adjustment Factor | 1.0000 | 1.0000 | 1.0000 | 1.0000 | 1.0000 | 1.0000 | 1.0000 | 1.0000 | 1.0000 | 1.0000 | 1.0000 | 1.0000 |
| Total 15-Minute Volume [veh/h] | 121 | 121 | 76 | 45 | 83 | 13 | 49 | 132 | 111 | 41 | 114 | 60 |
| Total Analysis Volume [veh/h] | 483 | 486 | 303 | 180 | 332 | 51 | 196 | 529 | 445 | 165 | 456 | 242 |
| Presence of On-Street Parking | No | | No | No | | No | No | | No | No | | No |
| On-Street Parking Maneuver Rate [/h] | 0 | 0 | 0 | 0 | 0 | 0 | 0 | 0 | 0 | 0 | 0 | 0 |
| Local Bus Stopping Rate [/h] | 0 | 0 | 0 | 0 | 0 | 0 | 0 | 0 | 0 | 0 | 0 | 0 |
| Pedestrian Volume [ped/h] | 0 | | | 0 | | | 0 | | | 0 | | |
| Bicycle Volume [bicycles/h] | 0 | | | 0 | | | 0 | | | 0 | | |

**Intersection Settings**

| | |
|---|---|
| Located in CBD | No |
| Signal Coordination Group | 3 - EW - Valley |
| Cycle Length [s] | 120 |
| Coordination Type | Time of Day Pattern Coordinated |
| Actuation Type | Fully actuated |
| Offset [s] | 50.0 |
| Offset Reference | LagFO |
| Permissive Mode | SingleBand |
| Lost time [s] | 12.00 |

**Phasing & Timing**

| Control Type | Permiss | Permiss | Permiss | Permiss | Permiss | Permiss | Protecte | Permiss | Permiss | Protecte | Permiss | Permiss |
|---|---|---|---|---|---|---|---|---|---|---|---|---|
| Signal group | 0 | 2 | 0 | 0 | 6 | 0 | 3 | 8 | 0 | 7 | 4 | 0 |
| Auxiliary Signal Groups | | | | | | | | | | | | |
| Lead / Lag | - | - | - | - | - | - | Lead | - | - | Lead | - | - |
| Minimum Green [s] | 0 | 5 | 0 | 0 | 5 | 0 | 5 | 5 | 0 | 5 | 5 | 0 |
| Maximum Green [s] | 0 | 30 | 0 | 0 | 30 | 0 | 30 | 30 | 0 | 30 | 30 | 0 |
| Amber [s] | 0.0 | 4.4 | 0.0 | 0.0 | 4.4 | 0.0 | 4.4 | 4.4 | 0.0 | 3.7 | 3.7 | 0.0 |
| All red [s] | 0.0 | 1.0 | 0.0 | 0.0 | 1.0 | 0.0 | 1.0 | 1.0 | 0.0 | 1.0 | 1.0 | 0.0 |
| Split [s] | 0 | 71 | 0 | 0 | 71 | 0 | 16 | 39 | 0 | 10 | 33 | 0 |
| Vehicle Extension [s] | 0.0 | 3.0 | 0.0 | 0.0 | 3.0 | 0.0 | 3.0 | 3.0 | 0.0 | 3.0 | 3.0 | 0.0 |
| Walk [s] | 0 | 7 | 0 | 0 | 7 | 0 | 0 | 7 | 0 | 0 | 7 | 0 |
| Pedestrian Clearance [s] | 0 | 25 | 0 | 0 | 29 | 0 | 0 | 22 | 0 | 0 | 21 | 0 |
| I1, Start-Up Lost Time [s] | 0.0 | 2.0 | 0.0 | 0.0 | 2.0 | 0.0 | 2.0 | 2.0 | 0.0 | 2.0 | 2.0 | 0.0 |
| I2, Clearance Lost Time [s] | 0.0 | 3.4 | 0.0 | 0.0 | 3.4 | 0.0 | 3.4 | 3.4 | 0.0 | 2.7 | 2.7 | 0.0 |
| Minimum Recall | | No | | | No | | No | No | | No | No | |
| Maximum Recall | | No | | | No | | No | No | | No | No | |
| Pedestrian Recall | | No | | | No | | No | No | | No | No | |
| Detector Location [ft] | 0.0 | 0.0 | 0.0 | 0.0 | 0.0 | 0.0 | 0.0 | 0.0 | 0.0 | 0.0 | 0.0 | 0.0 |
| Detector Length [ft] | 0.0 | 0.0 | 0.0 | 0.0 | 0.0 | 0.0 | 0.0 | 0.0 | 0.0 | 0.0 | 0.0 | 0.0 |
| I, Upstream Filtering Factor | 1.00 | 1.00 | 1.00 | 1.00 | 1.00 | 1.00 | 1.00 | 1.00 | 1.00 | 1.00 | 1.00 | 1.00 |

**Exclusive Pedestrian Phase**

| | |
|---|---|
| Pedestrian Signal Group | 0 |
| Pedestrian Walk [s] | 0 |
| Pedestrian Clearance [s] | 0 |

**Lane Group Calculations**

| Lane Group | C | R | C | L | C | C | L | C | C |
|---|---|---|---|---|---|---|---|---|---|
| L, Total Lost Time per Cycle [s] | 5.40 | 5.40 | 5.40 | 5.40 | 5.40 | 5.40 | 4.70 | 4.70 | 4.70 |
| l1_p, Permitted Start-Up Lost Time [s] | 2.00 | 0.00 | 2.00 | 0.00 | 0.00 | 0.00 | 0.00 | 0.00 | 0.00 |
| l2, Clearance Lost Time [s] | 3.40 | 3.40 | 3.40 | 3.40 | 3.40 | 3.40 | 2.70 | 2.70 | 2.70 |
| g_i, Effective Green Time [s] | 66 | 66 | 66 | 11 | 34 | 34 | 5 | 28 | 28 |
| g / C, Green / Cycle | 0.55 | 0.55 | 0.55 | 0.09 | 0.28 | 0.28 | 0.04 | 0.24 | 0.24 |
| (v / s)_i Volume / Saturation Flow Rate | 1.07 | 0.19 | 7.69 | 0.11 | 0.29 | 0.29 | 0.09 | 0.20 | 0.20 |
| s, saturation flow rate [veh/h] | 904 | 1583 | 73 | 1740 | 1827 | 1555 | 1740 | 1827 | 1616 |
| c, Capacity [veh/h] | 539 | 865 | 80 | 156 | 509 | 433 | 79 | 429 | 379 |
| d1, Uniform Delay [s] | 29.95 | 15.26 | 30.92 | 52.82 | 37.71 | 37.71 | 56.35 | 39.42 | 39.44 |
| k, delay calibration | 0.50 | 0.11 | 0.50 | 0.47 | 0.50 | 0.50 | 0.50 | 0.50 | 0.50 |
| I, Upstream Filtering Factor | 1.00 | 1.00 | 1.00 | 1.00 | 1.00 | 1.00 | 1.00 | 1.00 | 1.00 |
| d2, Incremental Delay [s] | 366.33 | 0.24 | 2758.68 | 154.60 | 47.96 | 53.11 | 524.94 | 20.04 | 22.24 |
| d3, Initial Queue Delay [s] | 0.00 | 0.00 | 0.00 | 0.00 | 0.00 | 0.00 | 0.00 | 0.00 | 0.00 |
| Rp, platoon ratio | 1.00 | 1.00 | 1.00 | 1.33 | 1.33 | 1.33 | 1.33 | 1.33 | 1.33 |
| PF, progression factor | 1.00 | 1.00 | 1.00 | 1.00 | 1.00 | 1.00 | 1.00 | 1.00 | 1.00 |

**Lane Group Results**

| | | | | | | | | | |
|---|---|---|---|---|---|---|---|---|---|
| X, volume / capacity | 1.80 | 0.35 | 7.07 | 1.26 | 1.03 | 1.04 | 2.08 | 0.86 | 0.86 |
| d, Delay for Lane Group [s/veh] | 396.28 | 15.50 | 2789.60 | 207.42 | 85.67 | 90.82 | 581.28 | 59.46 | 61.68 |
| Lane Group LOS | F | B | F | F | F | F | F | E | E |
| Critical Lane Group | No | No | Yes | No | No | Yes | Yes | No | No |
| 50th-Percentile Queue Length [veh] | 70.57 | 4.47 | 62.06 | 11.17 | 20.12 | 17.75 | 13.95 | 12.04 | 10.90 |
| 50th-Percentile Queue Length [ft] | 1764.33 | 111.77 | 1551.43 | 279.36 | 503.12 | 443.77 | 348.87 | 300.95 | 272.49 |
| 95th-Percentile Queue Length [veh] | 115.49 | 7.94 | 109.33 | 18.02 | 28.01 | 25.22 | 23.08 | 17.73 | 16.31 |
| 95th-Percentile Queue Length [ft] | 2887.28 | 198.46 | 2733.17 | 450.41 | 700.29 | 630.52 | 576.90 | 443.20 | 407.86 |

**Movement, Approach, & Intersection Results**

| | | | | | | | | | | | | |
|---|---|---|---|---|---|---|---|---|---|---|---|---|
| d_M, Delay for Movement [s/veh] | 396.28 | 396.28 | 15.50 | 2789.60 | 2789.60 | 2789.60 | 207.42 | 85.71 | 90.82 | 581.28 | 59.88 | 61.68 |
| Movement LOS | F | F | B | F | F | F | F | F | F | F | E | E |
| d_A, Approach Delay [s/veh] | 305.57 | | | 2789.60 | | | 108.04 | | | 160.07 | | |
| Approach LOS | F | | | F | | | F | | | F | | |
| d_I, Intersection Delay [s/veh] | 574.92 | | | | | | | | | | | |
| Intersection LOS | F | | | | | | | | | | | |
| Intersection V/C | 8.971 | | | | | | | | | | | |

## Sequence

| | | | | | | | | | | | | | | | | |
|---|---|---|---|---|---|---|---|---|---|---|---|---|---|---|---|---|
| Ring 1 | 2 | 3 | 4 | - | - | - | - | - | - | - | - | - | - | - | - | - |
| Ring 2 | 6 | 7 | 8 | - | - | - | - | - | - | - | - | - | - | - | - | - |
| Ring 3 | - | - | - | - | - | - | - | - | - | - | - | - | - | - | - | - |
| Ring 4 | - | - | - | - | - | - | - | - | - | - | - | - | - | - | - | - |

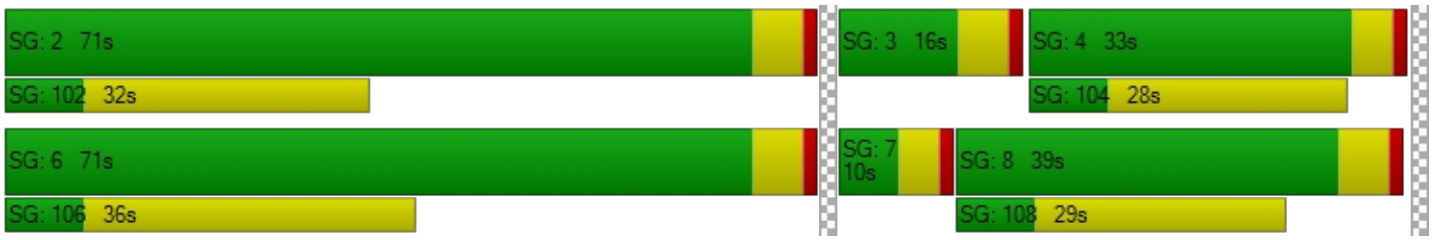

**Intersection Level Of Service Report**
**Intersection 9: Locust Ave (NS) / Marygold Ave (EW)**

| | | | |
|---|---|---|---|
| Control Type: | All-way stop | Delay (sec / veh): | 37.4 |
| Analysis Method: | HCM 2010 | Level Of Service: | E |
| Analysis Period: | 15 minutes | | |

**Intersection Setup**

| Name | Locust Avenue | | | Locust Avenue | | | Marygold Avenue | | | | | |
|---|---|---|---|---|---|---|---|---|---|---|---|---|
| Approach | Northbound | | | Southbound | | | Eastbound | | | Westbound | | |
| Lane Configuration | | | | | | | | | | | | |
| Turning Movement | Left | Thru | Right | Left | Thru | Right | Left | Thru | Right | Left | Thru | Right |
| Lane Width [ft] | 12.00 | 12.00 | 12.00 | 12.00 | 12.00 | 12.00 | 12.00 | 12.00 | 12.00 | 12.00 | 12.00 | 12.00 |
| No. of Lanes in Pocket | 0 | 0 | 1 | 0 | 0 | 1 | 0 | 0 | 0 | 0 | 0 | 0 |
| Pocket Length [ft] | 100.00 | 100.00 | 100.00 | 100.00 | 100.00 | 325.00 | 100.00 | 100.00 | 100.00 | 100.00 | 100.00 | 100.00 |
| Speed [mph] | 30.00 | | | 40.00 | | | 30.00 | | | 30.00 | | |
| Grade [%] | 0.00 | | | 0.00 | | | 0.00 | | | 0.00 | | |
| Crosswalk | Yes | | | Yes | | | Yes | | | Yes | | |

**volumes**

| Name | Locust Avenue | | | Locust Avenue | | | Marygold Avenue | | | | | |
|---|---|---|---|---|---|---|---|---|---|---|---|---|
| Base Volume Input [veh/h] | 62 | 498 | 49 | 19 | 198 | 13 | 61 | 93 | 52 | 33 | 33 | 31 |
| Base Volume Adjustment Factor | 1.0000 | 1.0000 | 1.0000 | 1.0000 | 1.0000 | 1.0000 | 1.0000 | 1.0000 | 1.0000 | 1.0000 | 1.0000 | 1.0000 |
| Heavy Vehicles Percentage [%] | 2.00 | 2.00 | 2.00 | 2.00 | 2.00 | 2.00 | 2.00 | 2.00 | 2.00 | 2.00 | 2.00 | 2.00 |
| Growth Rate | 1.00 | 1.00 | 1.00 | 1.00 | 1.00 | 1.00 | 1.00 | 1.00 | 1.00 | 1.00 | 1.00 | 1.00 |
| In-Process Volume [veh/h] | 0 | 0 | 0 | 0 | 0 | 0 | 0 | 0 | 0 | 0 | 0 | 0 |
| Site-Generated Trips [veh/h] | 0 | 0 | 0 | 0 | 0 | 0 | 0 | 0 | 0 | 0 | 0 | 0 |
| Diverted Trips [veh/h] | 0 | 0 | 0 | 0 | 0 | 0 | 0 | 0 | 0 | 0 | 0 | 0 |
| Pass-by Trips [veh/h] | 0 | 0 | 0 | 0 | 0 | 0 | 0 | 0 | 0 | 0 | 0 | 0 |
| Existing Site Adjustment Volume [veh/h] | 0 | 0 | 0 | 0 | 0 | 0 | 0 | 0 | 0 | 0 | 0 | 0 |
| Other Volume [veh/h] | 0 | 0 | 0 | 0 | 0 | 0 | 0 | 0 | 0 | 0 | 0 | 0 |
| Total Hourly Volume [veh/h] | 62 | 498 | 49 | 19 | 198 | 13 | 61 | 93 | 52 | 33 | 33 | 31 |
| Peak Hour Factor | 0.9500 | 0.9500 | 0.9500 | 0.9500 | 0.9500 | 0.9500 | 0.9500 | 0.9500 | 0.9500 | 0.9500 | 0.9500 | 0.9500 |
| Other Adjustment Factor | 1.0000 | 1.0000 | 1.0000 | 1.0000 | 1.0000 | 1.0000 | 1.0000 | 1.0000 | 1.0000 | 1.0000 | 1.0000 | 1.0000 |
| Total 15-Minute Volume [veh/h] | 16 | 131 | 13 | 5 | 52 | 3 | 16 | 24 | 14 | 9 | 9 | 8 |
| Total Analysis Volume [veh/h] | 65 | 524 | 52 | 20 | 208 | 14 | 64 | 98 | 55 | 35 | 35 | 33 |
| Pedestrian Volume [ped/h] | 0 | | | 0 | | | 0 | | | 0 | | |

**Intersection Settings**

**Lanes**

**Movement, Approach, & Intersection Results**

| | | | | | | |
|---|---|---|---|---|---|---|
| 95th-Percentile Queue Length [veh] | 15.08 | 0.25 | 2.06 | 0.07 | 1.87 | 0.72 |
| 95th-Percentile Queue Length [ft] | 376.91 | 6.30 | 51.60 | 1.76 | 46.77 | 18.11 |
| Approach Delay [s/veh] | 58.51 | | 13.74 | | 13.75 | 11.55 |
| Approach LOS | F | | B | | B | B |
| Intersection Delay [s/veh] | 37.41 | | | | | |
| Intersection LOS | E | | | | | |

**Intersection Level Of Service Report**
**Intersection 10: Locust Ave (NS) / Valley Blvd (EW)**

| | | | |
|---|---|---|---|
| Control Type: | Signalized | Delay (sec / veh): | 27.8 |
| Analysis Method: | HCM 2010 | Level Of Service: | C |
| Analysis Period: | 15 minutes | Volume to Capacity (v/c): | 0.698 |

**Intersection Setup**

| Name | Locust Avenue | | | Locust Avenue | | | Valley Boulevard | | | Valley Boulevard | | |
|---|---|---|---|---|---|---|---|---|---|---|---|---|
| Approach | Northbound | | | Southbound | | | Eastbound | | | Westbound | | |
| Lane Configuration | | | | | | | | | | | | |
| Turning Movement | Left | Thru | Right | Left | Thru | Right | Left | Thru | Right | Left | Thru | Right |
| Lane Width [ft] | 12.00 | 12.00 | 12.00 | 12.00 | 12.00 | 12.00 | 12.00 | 12.00 | 12.00 | 12.00 | 12.00 | 12.00 |
| No. of Lanes in Pocket | 0 | 0 | 0 | 0 | 0 | 0 | 1 | 0 | 0 | 1 | 0 | 0 |
| Pocket Length [ft] | 100.00 | 100.00 | 100.00 | 100.00 | 100.00 | 100.00 | 100.00 | 100.00 | 100.00 | 200.00 | 100.00 | 100.00 |
| Speed [mph] | 30.00 | | | 40.00 | | | 45.00 | | | 45.00 | | |
| Grade [%] | 0.00 | | | 0.00 | | | 0.00 | | | 0.00 | | |
| Crosswalk | Yes | | | Yes | | | No | | | Yes | | |

**volumes**

| Name | Locust Avenue | | | Locust Avenue | | | Valley Boulevard | | | Valley Boulevard | | |
|---|---|---|---|---|---|---|---|---|---|---|---|---|
| Base Volume Input [veh/h] | 14 | 18 | 81 | 101 | 13 | 96 | 346 | 672 | 22 | 65 | 518 | 196 |
| Base Volume Adjustment Factor | 1.0000 | 1.0000 | 1.0000 | 1.0000 | 1.0000 | 1.0000 | 1.0000 | 1.0000 | 1.0000 | 1.0000 | 1.0000 | 1.0000 |
| Heavy Vehicles Percentage [%] | 2.00 | 2.00 | 2.00 | 2.00 | 2.00 | 2.00 | 4.00 | 4.00 | 4.00 | 4.00 | 4.00 | 4.00 |
| Growth Rate | 1.00 | 1.00 | 1.00 | 1.00 | 1.00 | 1.00 | 1.00 | 1.00 | 1.00 | 1.00 | 1.00 | 1.00 |
| In-Process Volume [veh/h] | 0 | 0 | 0 | 0 | 0 | 0 | 0 | 0 | 0 | 0 | 0 | 0 |
| Site-Generated Trips [veh/h] | 0 | 0 | 0 | 0 | 0 | 0 | 0 | 0 | 0 | 0 | 0 | 0 |
| Diverted Trips [veh/h] | 0 | 0 | 0 | 0 | 0 | 0 | 0 | 0 | 0 | 0 | 0 | 0 |
| Pass-by Trips [veh/h] | 0 | 0 | 0 | 0 | 0 | 0 | 0 | 0 | 0 | 0 | 0 | 0 |
| Existing Site Adjustment Volume [veh/h] | 0 | 0 | 0 | 0 | 0 | 0 | 0 | 0 | 0 | 0 | 0 | 0 |
| Other Volume [veh/h] | 0 | 0 | 0 | 0 | 0 | 0 | 0 | 0 | 0 | 0 | 0 | 0 |
| Right-Turn on Red Volume [veh/h] | 0 | 0 | 0 | 0 | 0 | 0 | 0 | 0 | 0 | 0 | 0 | 0 |
| Total Hourly Volume [veh/h] | 14 | 18 | 81 | 101 | 13 | 96 | 346 | 672 | 22 | 65 | 518 | 196 |
| Peak Hour Factor | 0.9100 | 0.9100 | 0.9100 | 0.9100 | 0.9100 | 0.9100 | 0.9100 | 0.9100 | 0.9100 | 0.9100 | 0.9100 | 0.9100 |
| Other Adjustment Factor | 1.0000 | 1.0000 | 1.0000 | 1.0000 | 1.0000 | 1.0000 | 1.0000 | 1.0000 | 1.0000 | 1.0000 | 1.0000 | 1.0000 |
| Total 15-Minute Volume [veh/h] | 4 | 5 | 22 | 28 | 4 | 26 | 95 | 185 | 6 | 18 | 142 | 54 |
| Total Analysis Volume [veh/h] | 15 | 20 | 89 | 111 | 14 | 105 | 380 | 738 | 24 | 71 | 569 | 215 |
| Presence of On-Street Parking | No | | No | No | | No | No | | No | No | | No |
| On-Street Parking Maneuver Rate [/h] | 0 | 0 | 0 | 0 | 0 | 0 | 0 | 0 | 0 | 0 | 0 | 0 |
| Local Bus Stopping Rate [/h] | 0 | 0 | 0 | 0 | 0 | 0 | 0 | 0 | 0 | 0 | 0 | 0 |
| Pedestrian Volume [ped/h] | 0 | | | 0 | | | 0 | | | 0 | | |
| Bicycle Volume [bicycles/h] | 0 | | | 0 | | | 0 | | | 0 | | |

**Intersection Settings**

| | |
|---|---|
| Located in CBD | No |
| Signal Coordination Group | 3 - EW - Valley |
| Cycle Length [s] | 120 |
| Coordination Type | Time of Day Pattern Coordinated |
| Actuation Type | Fully actuated |
| Offset [s] | 47.0 |
| Offset Reference | LagFO |
| Permissive Mode | SingleBand |
| Lost time [s] | 12.00 |

**Phasing & Timing**

| Control Type | Permiss | Permiss | Permiss | Permiss | Permiss | Permiss | Protecte | Permiss | Permiss | Protecte | Permiss | Permiss |
|---|---|---|---|---|---|---|---|---|---|---|---|---|
| Signal group | 0 | 2 | 0 | 0 | 6 | 0 | 3 | 8 | 0 | 7 | 4 | 0 |
| Auxiliary Signal Groups | | | | | | | | | | | | |
| Lead / Lag | - | - | - | - | - | - | Lead | - | - | Lead | - | - |
| Minimum Green [s] | 0 | 5 | 0 | 0 | 5 | 0 | 5 | 5 | 0 | 5 | 5 | 0 |
| Maximum Green [s] | 0 | 30 | 0 | 0 | 30 | 0 | 30 | 30 | 0 | 30 | 30 | 0 |
| Amber [s] | 0.0 | 3.7 | 0.0 | 0.0 | 4.4 | 0.0 | 4.8 | 4.8 | 0.0 | 4.8 | 4.8 | 0.0 |
| All red [s] | 0.0 | 1.0 | 0.0 | 0.0 | 1.0 | 0.0 | 1.0 | 1.0 | 0.0 | 1.0 | 1.0 | 0.0 |
| Split [s] | 0 | 38 | 0 | 0 | 38 | 0 | 38 | 69 | 0 | 13 | 44 | 0 |
| Vehicle Extension [s] | 0.0 | 3.0 | 0.0 | 0.0 | 3.0 | 0.0 | 3.0 | 3.0 | 0.0 | 3.0 | 3.0 | 0.0 |
| Walk [s] | 0 | 7 | 0 | 0 | 7 | 0 | 0 | 7 | 0 | 0 | 7 | 0 |
| Pedestrian Clearance [s] | 0 | 26 | 0 | 0 | 10 | 0 | 0 | 16 | 0 | 0 | 19 | 0 |
| I1, Start-Up Lost Time [s] | 0.0 | 2.0 | 0.0 | 0.0 | 2.0 | 0.0 | 2.0 | 2.0 | 0.0 | 2.0 | 2.0 | 0.0 |
| I2, Clearance Lost Time [s] | 0.0 | 2.7 | 0.0 | 0.0 | 3.4 | 0.0 | 3.8 | 3.8 | 0.0 | 3.8 | 3.8 | 0.0 |
| Minimum Recall | | No | | | No | | No | No | | No | No | |
| Maximum Recall | | No | | | No | | No | No | | No | No | |
| Pedestrian Recall | | No | | | No | | No | No | | No | No | |
| Detector Location [ft] | 0.0 | 0.0 | 0.0 | 0.0 | 0.0 | 0.0 | 0.0 | 0.0 | 0.0 | 0.0 | 0.0 | 0.0 |
| Detector Length [ft] | 0.0 | 0.0 | 0.0 | 0.0 | 0.0 | 0.0 | 0.0 | 0.0 | 0.0 | 0.0 | 0.0 | 0.0 |
| I, Upstream Filtering Factor | 1.00 | 1.00 | 1.00 | 1.00 | 1.00 | 1.00 | 1.00 | 1.00 | 1.00 | 1.00 | 1.00 | 1.00 |

**Exclusive Pedestrian Phase**

| | |
|---|---|
| Pedestrian Signal Group | 0 |
| Pedestrian Walk [s] | 0 |
| Pedestrian Clearance [s] | 0 |

**Lane Group Calculations**

| Lane Group | C | C | L | C | C | L | C | C |
|---|---|---|---|---|---|---|---|---|
| L, Total Lost Time per Cycle [s] | 4.70 | 5.40 | 5.80 | 5.80 | 5.80 | 5.80 | 5.80 | 5.80 |
| l1_p, Permitted Start-Up Lost Time [s] | 2.00 | 2.00 | 0.00 | 0.00 | 0.00 | 0.00 | 0.00 | 0.00 |
| l2, Clearance Lost Time [s] | 0.00 | 3.40 | 3.80 | 3.80 | 3.80 | 3.80 | 3.80 | 3.80 |
| g_i, Effective Green Time [s] | 25 | 24 | 28 | 72 | 72 | 6 | 50 | 50 |
| g / C, Green / Cycle | 0.21 | 0.20 | 0.23 | 0.60 | 0.60 | 0.05 | 0.42 | 0.42 |
| (v / s)_i Volume / Saturation Flow Rate | 0.07 | 0.18 | 0.22 | 0.21 | 0.21 | 0.04 | 0.22 | 0.23 |
| s, saturation flow rate [veh/h] | 1654 | 1244 | 1740 | 1827 | 1807 | 1740 | 1827 | 1658 |
| c, Capacity [veh/h] | 354 | 299 | 408 | 1099 | 1087 | 91 | 766 | 695 |
| d1, Uniform Delay [s] | 40.44 | 47.56 | 40.28 | 5.42 | 5.42 | 55.10 | 19.10 | 19.11 |
| k, delay calibration | 0.11 | 0.20 | 0.18 | 0.50 | 0.50 | 0.11 | 0.50 | 0.50 |
| I, Upstream Filtering Factor | 1.00 | 1.00 | 1.00 | 1.00 | 1.00 | 1.00 | 1.00 | 1.00 |
| d2, Incremental Delay [s] | 0.59 | 7.48 | 14.61 | 0.87 | 0.88 | 13.25 | 2.68 | 2.96 |
| d3, Initial Queue Delay [s] | 0.00 | 0.00 | 0.00 | 0.00 | 0.00 | 0.00 | 0.00 | 0.00 |
| Rp, platoon ratio | 1.00 | 1.00 | 1.33 | 1.33 | 1.33 | 1.33 | 1.33 | 1.33 |
| PF, progression factor | 1.00 | 1.00 | 1.00 | 1.00 | 1.00 | 1.00 | 1.00 | 1.00 |

**Lane Group Results**

| | | | | | | | | |
|---|---|---|---|---|---|---|---|---|
| X, volume / capacity | 0.35 | 0.77 | 0.93 | 0.35 | 0.35 | 0.78 | 0.54 | 0.54 |
| d, Delay for Lane Group [s/veh] | 41.03 | 55.04 | 54.89 | 6.29 | 6.30 | 68.35 | 21.78 | 22.06 |
| Lane Group LOS | D | E | D | A | A | E | C | C |
| Critical Lane Group | No | Yes | Yes | No | No | No | No | Yes |
| 50th-Percentile Queue Length [veh] | 3.20 | 7.22 | 11.38 | 2.32 | 2.30 | 2.37 | 6.50 | 5.96 |
| 50th-Percentile Queue Length [ft] | 80.06 | 180.47 | 284.62 | 58.06 | 57.52 | 59.25 | 162.56 | 149.12 |
| 95th-Percentile Queue Length [veh] | 5.76 | 11.63 | 16.92 | 4.18 | 4.14 | 4.27 | 10.68 | 9.97 |
| 95th-Percentile Queue Length [ft] | 144.10 | 290.63 | 422.96 | 104.51 | 103.53 | 106.66 | 267.10 | 249.25 |

**Movement, Approach, & Intersection Results**

| | | | | | | | | | | | | |
|---|---|---|---|---|---|---|---|---|---|---|---|---|
| d_M, Delay for Movement [s/veh] | 41.03 | 41.03 | 41.03 | 55.04 | 55.04 | 55.04 | 54.89 | 6.30 | 6.30 | 68.35 | 21.86 | 22.06 |
| Movement LOS | D | D | D | E | E | E | D | A | A | E | C | C |
| d_A, Approach Delay [s/veh] | 41.03 | | | 55.04 | | | 22.47 | | | 25.77 | | |
| Approach LOS | D | | | E | | | C | | | C | | |
| d_I, Intersection Delay [s/veh] | 27.83 | | | | | | | | | | | |
| Intersection LOS | C | | | | | | | | | | | |
| Intersection V/C | 0.698 | | | | | | | | | | | |

## Sequence

| | | | | | | | | | | | | | | | | |
|---|---|---|---|---|---|---|---|---|---|---|---|---|---|---|---|---|
| Ring 1 | 2 | 3 | 4 | - | - | - | - | - | - | - | - | - | - | - | - | - |
| Ring 2 | 6 | 7 | 8 | - | - | - | - | - | - | - | - | - | - | - | - | - |
| Ring 3 | - | - | - | - | - | - | - | - | - | - | - | - | - | - | - | - |
| Ring 4 | - | - | - | - | - | - | - | - | - | - | - | - | - | - | - | - |

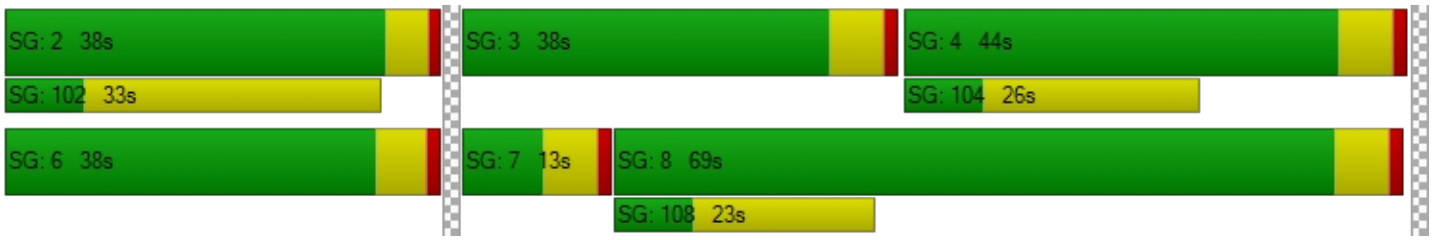

**Intersection Level Of Service Report**
**Intersection 11: Cedar Ave (NS) / San Bernardino Ave (EW)**

| | | | |
|---|---|---|---|
| Control Type: | Signalized | Delay (sec / veh): | 27.5 |
| Analysis Method: | HCM 2010 | Level Of Service: | C |
| Analysis Period: | 15 minutes | Volume to Capacity (v/c): | 0.680 |

**Intersection Setup**

| Name | Cedar Avenue | | | Cedar Avenue | | | | | | San Bernardino Avenue | | |
|---|---|---|---|---|---|---|---|---|---|---|---|---|
| Approach | Northbound | | | Southbound | | | Eastbound | | | Westbound | | |
| Lane Configuration | | | | | | | | | | | | |
| Turning Movement | Left | Thru | Right | Left | Thru | Right | Left | Thru | Right | Left | Thru | Right |
| Lane Width [ft] | 12.00 | 12.00 | 12.00 | 12.00 | 12.00 | 12.00 | 12.00 | 12.00 | 12.00 | 12.00 | 12.00 | 12.00 |
| No. of Lanes in Pocket | 1 | 0 | 0 | 1 | 0 | 0 | 1 | 0 | 1 | 1 | 0 | 0 |
| Pocket Length [ft] | 125.00 | 100.00 | 100.00 | 125.00 | 100.00 | 100.00 | 100.00 | 100.00 | 100.00 | 100.00 | 100.00 | 100.00 |
| Speed [mph] | 40.00 | | | 40.00 | | | 30.00 | | | 40.00 | | |
| Grade [%] | 0.00 | | | 0.00 | | | 0.00 | | | 0.00 | | |
| Crosswalk | Yes | | | Yes | | | Yes | | | Yes | | |

**volumes**

| Name | Cedar Avenue | | | Cedar Avenue | | | | | | San Bernardino Avenue | | |
|---|---|---|---|---|---|---|---|---|---|---|---|---|
| Base Volume Input [veh/h] | 135 | 1051 | 94 | 32 | 738 | 60 | 47 | 303 | 120 | 40 | 245 | 35 |
| Base Volume Adjustment Factor | 1.0000 | 1.0000 | 1.0000 | 1.0000 | 1.0000 | 1.0000 | 1.0000 | 1.0000 | 1.0000 | 1.0000 | 1.0000 | 1.0000 |
| Heavy Vehicles Percentage [%] | 4.00 | 4.00 | 4.00 | 4.00 | 4.00 | 4.00 | 2.00 | 2.00 | 2.00 | 2.00 | 2.00 | 2.00 |
| Growth Rate | 1.00 | 1.00 | 1.00 | 1.00 | 1.00 | 1.00 | 1.00 | 1.00 | 1.00 | 1.00 | 1.00 | 1.00 |
| In-Process Volume [veh/h] | 0 | 0 | 0 | 0 | 0 | 0 | 0 | 0 | 0 | 0 | 0 | 0 |
| Site-Generated Trips [veh/h] | 0 | 0 | 0 | 0 | 0 | 0 | 0 | 0 | 0 | 0 | 0 | 0 |
| Diverted Trips [veh/h] | 0 | 0 | 0 | 0 | 0 | 0 | 0 | 0 | 0 | 0 | 0 | 0 |
| Pass-by Trips [veh/h] | 0 | 0 | 0 | 0 | 0 | 0 | 0 | 0 | 0 | 0 | 0 | 0 |
| Existing Site Adjustment Volume [veh/h] | 0 | 0 | 0 | 0 | 0 | 0 | 0 | 0 | 0 | 0 | 0 | 0 |
| Other Volume [veh/h] | 0 | 0 | 0 | 0 | 0 | 0 | 0 | 0 | 0 | 0 | 0 | 0 |
| Right-Turn on Red Volume [veh/h] | 0 | 0 | 0 | 0 | 0 | 0 | 0 | 0 | 0 | 0 | 0 | 0 |
| Total Hourly Volume [veh/h] | 135 | 1051 | 94 | 32 | 738 | 60 | 47 | 303 | 120 | 40 | 245 | 35 |
| Peak Hour Factor | 0.8870 | 0.8870 | 0.8870 | 0.8870 | 0.8870 | 0.8870 | 0.8870 | 0.8870 | 0.8870 | 0.8870 | 0.8870 | 0.8870 |
| Other Adjustment Factor | 1.0000 | 1.0000 | 1.0000 | 1.0000 | 1.0000 | 1.0000 | 1.0000 | 1.0000 | 1.0000 | 1.0000 | 1.0000 | 1.0000 |
| Total 15-Minute Volume [veh/h] | 38 | 296 | 26 | 9 | 208 | 17 | 13 | 85 | 34 | 11 | 69 | 10 |
| Total Analysis Volume [veh/h] | 152 | 1185 | 106 | 36 | 832 | 68 | 53 | 342 | 135 | 45 | 276 | 39 |
| Presence of On-Street Parking | No | | No | No | | No | No | | No | No | | No |
| On-Street Parking Maneuver Rate [/h] | 0 | 0 | 0 | 0 | 0 | 0 | 0 | 0 | 0 | 0 | 0 | 0 |
| Local Bus Stopping Rate [/h] | 0 | 0 | 0 | 0 | 0 | 0 | 0 | 0 | 0 | 0 | 0 | 0 |
| Pedestrian Volume [ped/h] | 0 | | | 0 | | | 0 | | | 0 | | |
| Bicycle Volume [bicycles/h] | 0 | | | 0 | | | 0 | | | 0 | | |

**Intersection Settings**

| | |
|---|---|
| Located in CBD | No |
| Signal Coordination Group | 2 - NS - Cedar |
| Cycle Length [s] | 120 |
| Coordination Type | Time of Day Pattern Coordinated |
| Actuation Type | Fully actuated |
| Offset [s] | 0.0 |
| Offset Reference | LagFO |
| Permissive Mode | SingleBand |
| Lost time [s] | 16.00 |

**Phasing & Timing**

| Control Type | Protecte | Permiss | Permiss | Protecte | Permiss | Permiss | Protecte | Permiss | Permiss | Protecte | Permiss | Permiss |
|---|---|---|---|---|---|---|---|---|---|---|---|---|
| Signal group | 5 | 2 | 0 | 1 | 6 | 0 | 3 | 8 | 0 | 7 | 4 | 0 |
| Auxiliary Signal Groups | | | | | | | | | | | | |
| Lead / Lag | Lead | - | - | Lead | - | - | Lead | - | - | Lead | - | - |
| Minimum Green [s] | 5 | 5 | 0 | 5 | 5 | 0 | 5 | 5 | 0 | 5 | 5 | 0 |
| Maximum Green [s] | 30 | 30 | 0 | 30 | 30 | 0 | 30 | 30 | 0 | 30 | 30 | 0 |
| Amber [s] | 4.4 | 4.4 | 0.0 | 4.4 | 4.4 | 0.0 | 3.7 | 3.7 | 0.0 | 4.4 | 4.4 | 0.0 |
| All red [s] | 1.0 | 1.0 | 0.0 | 1.0 | 1.0 | 0.0 | 1.0 | 1.0 | 0.0 | 1.0 | 1.0 | 0.0 |
| Split [s] | 18 | 57 | 0 | 11 | 50 | 0 | 10 | 41 | 0 | 11 | 42 | 0 |
| Vehicle Extension [s] | 3.0 | 3.0 | 0.0 | 3.0 | 3.0 | 0.0 | 3.0 | 3.0 | 0.0 | 3.0 | 3.0 | 0.0 |
| Walk [s] | 0 | 7 | 0 | 0 | 7 | 0 | 0 | 7 | 0 | 0 | 7 | 0 |
| Pedestrian Clearance [s] | 0 | 24 | 0 | 0 | 24 | 0 | 0 | 29 | 0 | 0 | 29 | 0 |
| I1, Start-Up Lost Time [s] | 2.0 | 2.0 | 0.0 | 2.0 | 2.0 | 0.0 | 2.0 | 2.0 | 0.0 | 2.0 | 2.0 | 0.0 |
| I2, Clearance Lost Time [s] | 3.4 | 3.4 | 0.0 | 3.4 | 3.4 | 0.0 | 2.7 | 2.7 | 0.0 | 3.4 | 3.4 | 0.0 |
| Minimum Recall | No | No | | No | No | | No | No | | No | No | |
| Maximum Recall | No | No | | No | No | | No | No | | No | No | |
| Pedestrian Recall | No | No | | No | No | | No | No | | No | No | |
| Detector Location [ft] | 0.0 | 0.0 | 0.0 | 0.0 | 0.0 | 0.0 | 0.0 | 0.0 | 0.0 | 0.0 | 0.0 | 0.0 |
| Detector Length [ft] | 0.0 | 0.0 | 0.0 | 0.0 | 0.0 | 0.0 | 0.0 | 0.0 | 0.0 | 0.0 | 0.0 | 0.0 |
| I, Upstream Filtering Factor | 1.00 | 1.00 | 1.00 | 1.00 | 1.00 | 1.00 | 1.00 | 1.00 | 1.00 | 1.00 | 1.00 | 1.00 |

**Exclusive Pedestrian Phase**

| | |
|---|---|
| Pedestrian Signal Group | 0 |
| Pedestrian Walk [s] | 0 |
| Pedestrian Clearance [s] | 0 |

**Lane Group Calculations**

| Lane Group | L | C | C | L | C | C | L | C | R | L | C | C |
|---|---|---|---|---|---|---|---|---|---|---|---|---|
| L, Total Lost Time per Cycle [s] | 5.40 | 5.40 | 5.40 | 5.40 | 5.40 | 5.40 | 4.70 | 4.70 | 4.70 | 5.40 | 5.40 | 5.40 |
| l1_p, Permitted Start-Up Lost Time [s] | 0.00 | 0.00 | 0.00 | 0.00 | 0.00 | 0.00 | 0.00 | 0.00 | 0.00 | 0.00 | 0.00 | 0.00 |
| l2, Clearance Lost Time [s] | 3.40 | 3.40 | 3.40 | 3.40 | 3.40 | 3.40 | 2.70 | 2.70 | 2.70 | 3.40 | 3.40 | 3.40 |
| g_i, Effective Green Time [s] | 12 | 67 | 67 | 4 | 58 | 58 | 5 | 25 | 25 | 4 | 24 | 24 |
| g / C, Green / Cycle | 0.10 | 0.56 | 0.56 | 0.03 | 0.49 | 0.49 | 0.04 | 0.20 | 0.20 | 0.03 | 0.20 | 0.20 |
| (v / s)_i Volume / Saturation Flow Rate | 0.09 | 0.36 | 0.36 | 0.02 | 0.25 | 0.25 | 0.03 | 0.18 | 0.09 | 0.03 | 0.09 | 0.09 |
| s, saturation flow rate [veh/h] | 1740 | 1827 | 1775 | 1740 | 1827 | 1779 | 1774 | 1863 | 1583 | 1774 | 1863 | 1784 |
| c, Capacity [veh/h] | 178 | 1020 | 991 | 52 | 888 | 865 | 70 | 381 | 324 | 59 | 370 | 354 |
| d1, Uniform Delay [s] | 51.01 | 9.47 | 9.50 | 57.08 | 13.64 | 13.64 | 57.13 | 46.55 | 41.55 | 57.56 | 42.18 | 42.24 |
| k, delay calibration | 0.23 | 0.50 | 0.50 | 0.11 | 0.50 | 0.50 | 0.11 | 0.14 | 0.11 | 0.11 | 0.11 | 0.11 |
| I, Upstream Filtering Factor | 1.00 | 1.00 | 1.00 | 1.00 | 1.00 | 1.00 | 1.00 | 1.00 | 1.00 | 1.00 | 1.00 | 1.00 |
| d2, Incremental Delay [s] | 20.93 | 3.08 | 3.23 | 14.90 | 2.12 | 2.18 | 15.62 | 9.83 | 0.86 | 17.81 | 0.80 | 0.86 |
| d3, Initial Queue Delay [s] | 0.00 | 0.00 | 0.00 | 0.00 | 0.00 | 0.00 | 0.00 | 0.00 | 0.00 | 0.00 | 0.00 | 0.00 |
| Rp, platoon ratio | 1.33 | 1.33 | 1.33 | 1.33 | 1.33 | 1.33 | 1.00 | 1.00 | 1.00 | 1.00 | 1.00 | 1.00 |
| PF, progression factor | 1.00 | 1.00 | 1.00 | 1.00 | 1.00 | 1.00 | 1.00 | 1.00 | 1.00 | 1.00 | 1.00 | 1.00 |

**Lane Group Results**

| | | | | | | | | | | | | |
|---|---|---|---|---|---|---|---|---|---|---|---|---|
| X, volume / capacity | 0.86 | 0.64 | 0.64 | 0.69 | 0.51 | 0.51 | 0.76 | 0.90 | 0.42 | 0.76 | 0.43 | 0.44 |
| d, Delay for Lane Group [s/veh] | 71.94 | 12.55 | 12.73 | 71.99 | 15.76 | 15.81 | 72.75 | 56.38 | 42.41 | 75.37 | 42.97 | 43.10 |
| Lane Group LOS | E | B | B | E | B | B | E | E | D | E | D | D |
| Critical Lane Group | No | No | Yes | Yes | No | No | No | Yes | No | Yes | No | No |
| 50th-Percentile Queue Length [veh] | 5.28 | 6.27 | 6.18 | 1.27 | 5.70 | 5.57 | 1.90 | 10.95 | 3.57 | 1.63 | 4.16 | 4.07 |
| 50th-Percentile Queue Length [ft] | 132.05 | 156.73 | 154.38 | 31.80 | 142.55 | 139.15 | 47.38 | 273.64 | 89.18 | 40.70 | 104.09 | 101.66 |
| 95th-Percentile Queue Length [veh] | 9.05 | 10.38 | 10.25 | 2.29 | 9.62 | 9.44 | 3.41 | 16.37 | 6.42 | 2.93 | 7.49 | 7.32 |
| 95th-Percentile Queue Length [ft] | 226.28 | 259.39 | 256.27 | 57.24 | 240.46 | 235.88 | 85.29 | 409.29 | 160.52 | 73.25 | 187.36 | 182.98 |

**Movement, Approach, & Intersection Results**

| | | | | | | | | | | | | |
|---|---|---|---|---|---|---|---|---|---|---|---|---|
| d_M, Delay for Movement [s/veh] | 71.94 | 12.63 | 12.73 | 71.99 | 15.78 | 15.81 | 72.75 | 56.38 | 42.41 | 75.37 | 43.03 | 43.10 |
| Movement LOS | E | B | B | E | B | B | E | E | D | E | D | D |
| d_A, Approach Delay [s/veh] | 18.88 | | | 17.95 | | | 54.46 | | | 47.08 | | |
| Approach LOS | B | | | B | | | D | | | D | | |
| d_I, Intersection Delay [s/veh] | 27.49 | | | | | | | | | | | |
| Intersection LOS | C | | | | | | | | | | | |
| Intersection V/C | 0.680 | | | | | | | | | | | |

## Sequence

| | | | | | | | | | | | | | | | | |
|---|---|---|---|---|---|---|---|---|---|---|---|---|---|---|---|---|
| Ring 1 | 1 | 2 | 3 | 4 | - | - | - | - | - | - | - | - | - | - | - | - |
| Ring 2 | 5 | 6 | 7 | 8 | - | - | - | - | - | - | - | - | - | - | - | - |
| Ring 3 | - | - | - | - | - | - | - | - | - | - | - | - | - | - | - | - |
| Ring 4 | - | - | - | - | - | - | - | - | - | - | - | - | - | - | - | - |

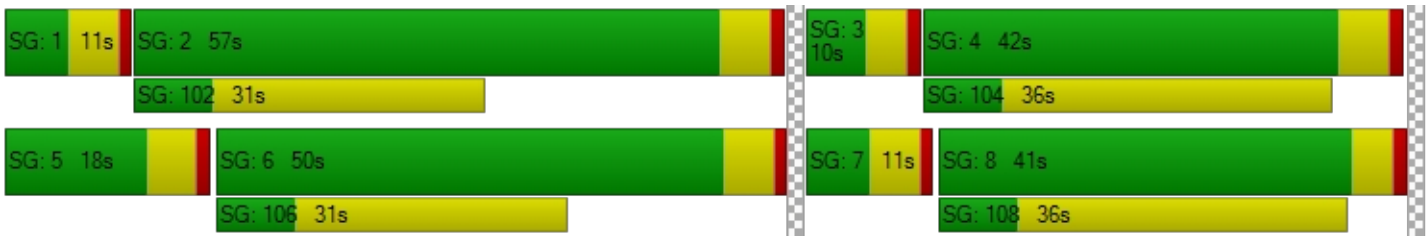

**Intersection Level Of Service Report**
**Intersection 12: Cedar Ave (NS) / Bloomington Ave (EW)**

| | | | |
|---|---|---|---|
| Control Type: | Signalized | Delay (sec / veh): | 16.5 |
| Analysis Method: | HCM 2010 | Level Of Service: | B |
| Analysis Period: | 15 minutes | Volume to Capacity (v/c): | 0.638 |

**Intersection Setup**

| Name | Cedar Avenue | | Cedar Avenue | | Bloomington Avenue | |
|---|---|---|---|---|---|---|
| Approach | Northbound | | Southbound | | Westbound | |
| Lane Configuration | | | | | | |
| Turning Movement | Thru | Right | Left | Thru | Left | Right |
| Lane Width [ft] | 12.00 | 12.00 | 12.00 | 12.00 | 12.00 | 12.00 |
| No. of Lanes in Pocket | 0 | 0 | 1 | 0 | 0 | 1 |
| Pocket Length [ft] | 100.00 | 100.00 | 100.00 | 100.00 | 100.00 | 125.00 |
| Speed [mph] | 40.00 | | 40.00 | | 45.00 | |
| Grade [%] | 0.00 | | 0.00 | | 0.00 | |
| Crosswalk | No | | Yes | | No | |

**volumes**

| Name | Cedar Avenue | | Cedar Avenue | | Bloomington Avenue | |
|---|---|---|---|---|---|---|
| Base Volume Input [veh/h] | 1249 | 901 | 72 | 858 | 543 | 57 |
| Base Volume Adjustment Factor | 1.0000 | 0.0000 | 1.0000 | 1.0000 | 1.0000 | 1.0000 |
| Heavy Vehicles Percentage [%] | 4.00 | 4.00 | 4.00 | 4.00 | 4.00 | 4.00 |
| Growth Rate | 1.00 | 1.00 | 1.00 | 1.00 | 1.00 | 1.00 |
| In-Process Volume [veh/h] | 0 | 0 | 0 | 0 | 0 | 0 |
| Site-Generated Trips [veh/h] | 0 | 0 | 0 | 0 | 0 | 0 |
| Diverted Trips [veh/h] | 0 | 0 | 0 | 0 | 0 | 0 |
| Pass-by Trips [veh/h] | 0 | 0 | 0 | 0 | 0 | 0 |
| Existing Site Adjustment Volume [veh/h] | 0 | 0 | 0 | 0 | 0 | 0 |
| Other Volume [veh/h] | 0 | 0 | 0 | 0 | 0 | 0 |
| Right-Turn on Red Volume [veh/h] | 0 | 0 | 0 | 0 | 0 | 0 |
| Total Hourly Volume [veh/h] | 1249 | 0 | 72 | 858 | 543 | 57 |
| Peak Hour Factor | 0.9480 | 0.9480 | 0.9480 | 0.9480 | 0.9480 | 0.9480 |
| Other Adjustment Factor | 1.0000 | 1.0000 | 1.0000 | 1.0000 | 1.0000 | 1.0000 |
| Total 15-Minute Volume [veh/h] | 329 | 0 | 19 | 226 | 143 | 15 |
| Total Analysis Volume [veh/h] | 1318 | 0 | 76 | 905 | 573 | 60 |
| Presence of On-Street Parking | No | No | No | No | No | No |
| On-Street Parking Maneuver Rate [/h] | 0 | 0 | 0 | 0 | 0 | 0 |
| Local Bus Stopping Rate [/h] | 0 | 0 | 0 | 0 | 0 | 0 |
| Pedestrian Volume [ped/h] | 0 | | 0 | | 0 | |
| Bicycle Volume [bicycles/h] | 0 | | 0 | | 0 | |

**Intersection Settings**

| | |
|---|---|
| Located in CBD | No |
| Signal Coordination Group | 2 - NS - Cedar |
| Cycle Length [s] | 120 |
| Coordination Type | Time of Day Pattern Coordinated |
| Actuation Type | Fully actuated |
| Offset [s] | 85.0 |
| Offset Reference | LagFO |
| Permissive Mode | SingleBand |
| Lost time [s] | 12.00 |

**Phasing & Timing**

| Control Type | Permissive | Permissive | Protected | Permissive | Split | Split |
|---|---|---|---|---|---|---|
| Signal group | 2 | 0 | 1 | 6 | 7 | 0 |
| Auxiliary Signal Groups | | | | | | |
| Lead / Lag | - | - | Lead | - | Lead | - |
| Minimum Green [s] | 5 | 0 | 5 | 5 | 5 | 0 |
| Maximum Green [s] | 30 | 0 | 30 | 30 | 30 | 0 |
| Amber [s] | 4.4 | 0.0 | 4.4 | 4.4 | 4.8 | 0.0 |
| All red [s] | 1.0 | 0.0 | 1.0 | 1.0 | 1.0 | 0.0 |
| Split [s] | 66 | 0 | 18 | 84 | 36 | 0 |
| Vehicle Extension [s] | 3.0 | 0.0 | 3.0 | 3.0 | 3.0 | 0.0 |
| Walk [s] | 7 | 0 | 0 | 7 | 7 | 0 |
| Pedestrian Clearance [s] | 10 | 0 | 0 | 10 | 23 | 0 |
| I1, Start-Up Lost Time [s] | 2.0 | 0.0 | 2.0 | 2.0 | 2.0 | 0.0 |
| I2, Clearance Lost Time [s] | 3.4 | 0.0 | 3.4 | 3.4 | 3.8 | 0.0 |
| Minimum Recall | No | | No | No | No | |
| Maximum Recall | No | | No | No | No | |
| Pedestrian Recall | No | | No | No | No | |
| Detector Location [ft] | 0.0 | 0.0 | 0.0 | 0.0 | 0.0 | 0.0 |
| Detector Length [ft] | 0.0 | 0.0 | 0.0 | 0.0 | 0.0 | 0.0 |
| I, Upstream Filtering Factor | 1.00 | 1.00 | 1.00 | 1.00 | 1.00 | 1.00 |

**Exclusive Pedestrian Phase**

| | |
|---|---|
| Pedestrian Signal Group | 0 |
| Pedestrian Walk [s] | 0 |
| Pedestrian Clearance [s] | 0 |

**Lane Group Calculations**

| Lane Group | C | C | R | L | C | L | R |
|---|---|---|---|---|---|---|---|
| L, Total Lost Time per Cycle [s] | 5.40 | 5.40 | 5.40 | 5.40 | 5.40 | 5.80 | 5.80 |
| l1_p, Permitted Start-Up Lost Time [s] | 0.00 | 0.00 | 0.00 | 0.00 | 0.00 | 0.00 | 0.00 |
| l2, Clearance Lost Time [s] | 3.40 | 3.40 | 3.40 | 3.40 | 3.40 | 3.80 | 3.80 |
| g_i, Effective Green Time [s] | 74 | 74 | 74 | 7 | 86 | 23 | 23 |
| g / C, Green / Cycle | 0.61 | 0.61 | 0.61 | 0.06 | 0.71 | 0.19 | 0.19 |
| (v / s)_i Volume / Saturation Flow Rate | 0.36 | 0.36 | 0.00 | 0.04 | 0.26 | 0.17 | 0.04 |
| s, saturation flow rate [veh/h] | 1827 | 1827 | 1553 | 1740 | 3478 | 3379 | 1553 |
| c, Capacity [veh/h] | 1121 | 1121 | 953 | 97 | 2484 | 650 | 299 |
| d1, Uniform Delay [s] | 5.60 | 5.60 | 0.00 | 54.82 | 0.88 | 47.09 | 40.68 |
| k, delay calibration | 0.50 | 0.50 | 0.50 | 0.11 | 0.50 | 0.11 | 0.11 |
| I, Upstream Filtering Factor | 1.00 | 1.00 | 1.00 | 1.00 | 1.00 | 1.00 | 1.00 |
| d2, Incremental Delay [s] | 2.26 | 2.26 | 0.00 | 12.94 | 0.41 | 4.11 | 0.33 |
| d3, Initial Queue Delay [s] | 0.00 | 0.00 | 0.00 | 0.00 | 0.00 | 0.00 | 0.00 |
| Rp, platoon ratio | 1.33 | 1.33 | 1.33 | 1.33 | 1.33 | 1.00 | 1.00 |
| PF, progression factor | 1.00 | 1.00 | 1.00 | 1.00 | 1.00 | 1.00 | 1.00 |

**Lane Group Results**

| | | | | | | | |
|---|---|---|---|---|---|---|---|
| X, volume / capacity | 0.59 | 0.59 | 0.00 | 0.79 | 0.36 | 0.88 | 0.20 |
| d, Delay for Lane Group [s/veh] | 7.87 | 7.87 | 0.00 | 67.76 | 1.29 | 51.20 | 41.00 |
| Lane Group LOS | A | A | A | E | A | D | D |
| Critical Lane Group | Yes | No | No | Yes | No | Yes | No |
| 50th-Percentile Queue Length [veh] | 4.27 | 4.27 | 0.00 | 2.54 | 0.63 | 8.42 | 1.48 |
| 50th-Percentile Queue Length [ft] | 106.72 | 106.72 | 0.00 | 63.47 | 15.86 | 210.60 | 37.10 |
| 95th-Percentile Queue Length [veh] | 7.66 | 7.66 | 0.00 | 4.57 | 1.14 | 13.18 | 2.67 |
| 95th-Percentile Queue Length [ft] | 191.43 | 191.43 | 0.00 | 114.24 | 28.54 | 329.60 | 66.78 |

**Movement, Approach, & Intersection Results**

| | | | | | | |
|---|---|---|---|---|---|---|
| d_M, Delay for Movement [s/veh] | 7.87 | 3.93 | 67.76 | 1.29 | 51.20 | 41.00 |
| Movement LOS | A | A | E | A | D | D |
| d_A, Approach Delay [s/veh] | 7.87 | | 6.44 | | 50.23 | |
| Approach LOS | A | | A | | D | |
| d_I, Intersection Delay [s/veh] | 16.54 | | | | | |
| Intersection LOS | B | | | | | |
| Intersection V/C | 0.638 | | | | | |

## Sequence

| | | | | | | | | | | | | | | | | |
|---|---|---|---|---|---|---|---|---|---|---|---|---|---|---|---|---|
| Ring 1 | 1 | 2 | - | - | - | - | - | - | - | - | - | - | - | - | - | - |
| Ring 2 | - | 6 | 7 | - | - | - | - | - | - | - | - | - | - | - | - | - |
| Ring 3 | - | - | - | - | - | - | - | - | - | - | - | - | - | - | - | - |
| Ring 4 | - | - | - | - | - | - | - | - | - | - | - | - | - | - | - | - |

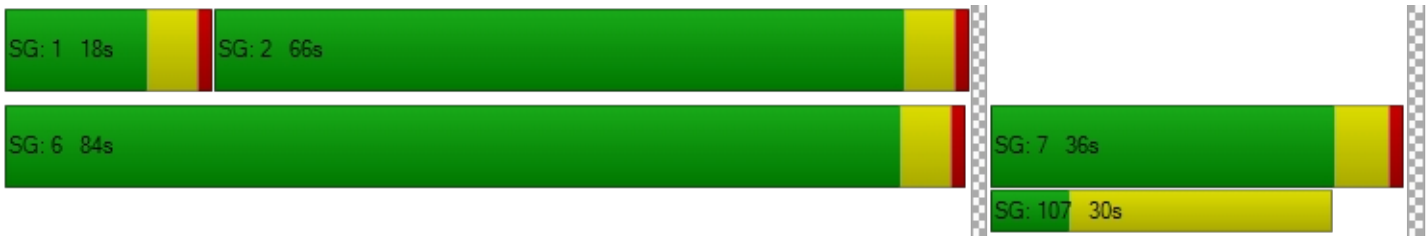

**Intersection Level Of Service Report**
**Intersection 13: Cedar Ave (NS) / Valley Blvd (EW)**

| | | | |
|---|---|---|---|
| Control Type: | Signalized | Delay (sec / veh): | 68.1 |
| Analysis Method: | HCM 2010 | Level Of Service: | E |
| Analysis Period: | 15 minutes | Volume to Capacity (v/c): | 0.980 |

**Intersection Setup**

| Name | Cedar Avenue | | | Cedar Avenue | | | | | | Valley Boulevard | | |
|---|---|---|---|---|---|---|---|---|---|---|---|---|
| Approach | Northbound | | | Southbound | | | Eastbound | | | Westbound | | |
| Lane Configuration | | | | | | | | | | | | |
| Turning Movement | Left | Thru | Right | Left | Thru | Right | Left | Thru | Right | Left | Thru | Right |
| Lane Width [ft] | 12.00 | 12.00 | 12.00 | 12.00 | 12.00 | 12.00 | 12.00 | 12.00 | 12.00 | 12.00 | 12.00 | 12.00 |
| No. of Lanes in Pocket | 2 | 0 | 1 | 2 | 0 | 0 | 2 | 0 | 1 | 2 | 0 | 0 |
| Pocket Length [ft] | 235.00 | 100.00 | 100.00 | 155.00 | 100.00 | 100.00 | 300.00 | 100.00 | 300.00 | 375.00 | 100.00 | 100.00 |
| Speed [mph] | 40.00 | | | 40.00 | | | 30.00 | | | 40.00 | | |
| Grade [%] | 0.00 | | | 0.00 | | | 0.00 | | | 0.00 | | |
| Crosswalk | Yes | | | Yes | | | Yes | | | Yes | | |

**volumes**

| Name | Cedar Avenue | | | Cedar Avenue | | | | | | Valley Boulevard | | |
|---|---|---|---|---|---|---|---|---|---|---|---|---|
| Base Volume Input [veh/h] | 528 | 1862 | 250 | 143 | 1136 | 71 | 218 | 297 | 475 | 283 | 220 | 107 |
| Base Volume Adjustment Factor | 1.0000 | 1.0000 | 1.0000 | 1.0000 | 1.0000 | 1.0000 | 1.0000 | 1.0000 | 1.0000 | 1.0000 | 1.0000 | 1.0000 |
| Heavy Vehicles Percentage [%] | 5.00 | 5.00 | 5.00 | 4.00 | 4.00 | 4.00 | 4.00 | 4.00 | 4.00 | 4.00 | 4.00 | 4.00 |
| Growth Rate | 1.00 | 1.00 | 1.00 | 1.00 | 1.00 | 1.00 | 1.00 | 1.00 | 1.00 | 1.00 | 1.00 | 1.00 |
| In-Process Volume [veh/h] | 0 | 0 | 0 | 0 | 0 | 0 | 0 | 0 | 0 | 0 | 0 | 0 |
| Site-Generated Trips [veh/h] | 0 | 0 | 0 | 0 | 0 | 0 | 0 | 0 | 0 | 0 | 0 | 0 |
| Diverted Trips [veh/h] | 0 | 0 | 0 | 0 | 0 | 0 | 0 | 0 | 0 | 0 | 0 | 0 |
| Pass-by Trips [veh/h] | 0 | 0 | 0 | 0 | 0 | 0 | 0 | 0 | 0 | 0 | 0 | 0 |
| Existing Site Adjustment Volume [veh/h] | 0 | 0 | 0 | 0 | 0 | 0 | 0 | 0 | 0 | 0 | 0 | 0 |
| Other Volume [veh/h] | 0 | 0 | 0 | 0 | 0 | 0 | 0 | 0 | 0 | 0 | 0 | 0 |
| Right-Turn on Red Volume [veh/h] | 0 | 0 | 0 | 0 | 0 | 0 | 0 | 0 | 0 | 0 | 0 | 0 |
| Total Hourly Volume [veh/h] | 528 | 1862 | 250 | 143 | 1136 | 71 | 218 | 297 | 475 | 283 | 220 | 107 |
| Peak Hour Factor | 0.9760 | 0.9760 | 0.9760 | 0.9760 | 0.9760 | 0.9760 | 0.9760 | 0.9760 | 0.9760 | 0.9760 | 0.9760 | 0.9760 |
| Other Adjustment Factor | 1.0000 | 1.0000 | 1.0000 | 1.0000 | 1.0000 | 1.0000 | 1.0000 | 1.0000 | 1.0000 | 1.0000 | 1.0000 | 1.0000 |
| Total 15-Minute Volume [veh/h] | 135 | 477 | 64 | 37 | 291 | 18 | 56 | 76 | 122 | 72 | 56 | 27 |
| Total Analysis Volume [veh/h] | 541 | 1908 | 256 | 147 | 1164 | 73 | 223 | 304 | 487 | 290 | 225 | 110 |
| Presence of On-Street Parking | No | | No | No | | No | No | | No | No | | No |
| On-Street Parking Maneuver Rate [/h] | 0 | 0 | 0 | 0 | 0 | 0 | 0 | 0 | 0 | 0 | 0 | 0 |
| Local Bus Stopping Rate [/h] | 0 | 0 | 0 | 0 | 0 | 0 | 0 | 0 | 0 | 0 | 0 | 0 |
| Pedestrian Volume [ped/h] | 0 | | | 0 | | | 0 | | | 0 | | |
| Bicycle Volume [bicycles/h] | 0 | | | 0 | | | 0 | | | 0 | | |

**Intersection Settings**

| | |
|---|---|
| Located in CBD | No |
| Signal Coordination Group | 2 - NS - Cedar |
| Cycle Length [s] | 120 |
| Coordination Type | Time of Day Pattern Coordinated |
| Actuation Type | Fully actuated |
| Offset [s] | 76.0 |
| Offset Reference | LagFO |
| Permissive Mode | SingleBand |
| Lost time [s] | 16.00 |

**Phasing & Timing**

| Control Type | Protecte | Permiss | Overlap | Protecte | Permiss | Permiss | Protecte | Permiss | Overlap | Protecte | Permiss | Permiss |
|---|---|---|---|---|---|---|---|---|---|---|---|---|
| Signal group | 5 | 2 | 2 | 1 | 6 | 0 | 3 | 8 | 8 | 7 | 4 | 0 |
| Auxiliary Signal Groups | | | 2,7 | | | | | | 5,8 | | | |
| Lead / Lag | Lead | - | - | Lead | - | - | Lead | - | - | Lead | - | - |
| Minimum Green [s] | 5 | 5 | 5 | 5 | 5 | 0 | 5 | 5 | 5 | 5 | 5 | 0 |
| Maximum Green [s] | 30 | 30 | 30 | 30 | 30 | 0 | 30 | 30 | 30 | 30 | 30 | 0 |
| Amber [s] | 4.4 | 4.4 | 4.4 | 4.4 | 4.4 | 0.0 | 3.7 | 3.7 | 3.7 | 4.4 | 4.4 | 0.0 |
| All red [s] | 1.0 | 1.0 | 1.0 | 1.0 | 1.0 | 0.0 | 1.0 | 1.0 | 1.0 | 1.0 | 1.0 | 0.0 |
| Split [s] | 25 | 56 | 56 | 38 | 40 | 0 | 12 | 22 | 22 | 12 | 21 | 0 |
| Vehicle Extension [s] | 3.0 | 3.0 | 3.0 | 3.0 | 3.0 | 0.0 | 3.0 | 3.0 | 3.0 | 3.0 | 3.0 | 0.0 |
| Walk [s] | 0 | 7 | 7 | 0 | 7 | 0 | 0 | 5 | 5 | 0 | 5 | 0 |
| Pedestrian Clearance [s] | 0 | 28 | 28 | 0 | 27 | 0 | 0 | 10 | 10 | 0 | 10 | 0 |
| I1, Start-Up Lost Time [s] | 2.0 | 2.0 | 2.0 | 2.0 | 2.0 | 0.0 | 2.0 | 2.0 | 2.0 | 2.0 | 2.0 | 0.0 |
| I2, Clearance Lost Time [s] | 3.4 | 3.4 | 3.4 | 3.4 | 3.4 | 0.0 | 2.7 | 2.7 | 2.7 | 3.4 | 3.4 | 0.0 |
| Minimum Recall | No | No | No | No | No | | No | No | No | No | No | |
| Maximum Recall | No | No | No | No | No | | No | No | No | No | No | |
| Pedestrian Recall | No | No | No | No | No | | No | No | No | No | No | |
| Detector Location [ft] | 0.0 | 0.0 | 0.0 | 0.0 | 0.0 | 0.0 | 0.0 | 0.0 | 0.0 | 0.0 | 0.0 | 0.0 |
| Detector Length [ft] | 0.0 | 0.0 | 0.0 | 0.0 | 0.0 | 0.0 | 0.0 | 0.0 | 0.0 | 0.0 | 0.0 | 0.0 |
| I, Upstream Filtering Factor | 1.00 | 1.00 | 1.00 | 1.00 | 1.00 | 1.00 | 1.00 | 1.00 | 1.00 | 1.00 | 1.00 | 1.00 |

**Exclusive Pedestrian Phase**

| | |
|---|---|
| Pedestrian Signal Group | 0 |
| Pedestrian Walk [s] | 0 |
| Pedestrian Clearance [s] | 0 |

**Lane Group Calculations**

| Lane Group | L | C | R | L | C | C | L | C | R | L | C | C |
|---|---|---|---|---|---|---|---|---|---|---|---|---|
| L, Total Lost Time per Cycle [s] | 5.40 | 5.40 | 5.40 | 5.40 | 5.40 | 5.40 | 4.70 | 4.70 | 5.40 | 5.40 | 5.40 | 5.40 |
| l1_p, Permitted Start-Up Lost Time [s] | 0.00 | 0.00 | 0.00 | 0.00 | 0.00 | 0.00 | 0.00 | 0.00 | 0.00 | 0.00 | 0.00 | 0.00 |
| l2, Clearance Lost Time [s] | 3.40 | 3.40 | 0.00 | 3.40 | 3.40 | 3.40 | 2.70 | 2.70 | 0.00 | 3.40 | 3.40 | 3.40 |
| g_i, Effective Green Time [s] | 20 | 55 | 74 | 7 | 43 | 43 | 7 | 23 | 47 | 13 | 29 | 29 |
| g / C, Green / Cycle | 0.16 | 0.46 | 0.62 | 0.06 | 0.36 | 0.36 | 0.06 | 0.19 | 0.40 | 0.11 | 0.24 | 0.24 |
| (v / s)_i Volume / Saturation Flow Rate | 0.16 | 0.55 | 0.17 | 0.04 | 0.24 | 0.24 | 0.07 | 0.17 | 0.18 | 0.09 | 0.10 | 0.10 |
| s, saturation flow rate [veh/h] | 3347 | 3445 | 1538 | 3379 | 3478 | 1772 | 3379 | 1827 | 2749 | 3379 | 1827 | 1628 |
| c, Capacity [veh/h] | 547 | 1580 | 947 | 210 | 1243 | 633 | 208 | 352 | 1087 | 379 | 445 | 397 |
| d1, Uniform Delay [s] | 46.83 | 23.33 | 4.54 | 53.96 | 25.86 | 25.86 | 55.12 | 43.08 | 20.26 | 49.54 | 33.69 | 33.74 |
| k, delay calibration | 0.11 | 0.50 | 0.50 | 0.11 | 0.50 | 0.50 | 0.11 | 0.11 | 0.11 | 0.11 | 0.20 | 0.20 |
| I, Upstream Filtering Factor | 1.00 | 1.00 | 1.00 | 1.00 | 1.00 | 1.00 | 1.00 | 1.00 | 1.00 | 1.00 | 1.00 | 1.00 |
| d2, Incremental Delay [s] | 15.34 | 99.64 | 0.70 | 4.16 | 2.75 | 5.32 | 50.53 | 6.29 | 0.29 | 3.24 | 1.04 | 1.24 |
| d3, Initial Queue Delay [s] | 0.00 | 0.00 | 0.00 | 0.00 | 0.00 | 0.00 | 0.00 | 0.00 | 0.00 | 0.00 | 0.00 | 0.00 |
| Rp, platoon ratio | 1.33 | 1.33 | 1.33 | 1.33 | 1.33 | 1.33 | 1.33 | 1.33 | 1.33 | 1.33 | 1.33 | 1.33 |
| PF, progression factor | 1.00 | 1.00 | 1.00 | 1.00 | 1.00 | 1.00 | 1.00 | 1.00 | 1.00 | 1.00 | 1.00 | 1.00 |

**Lane Group Results**

| | | | | | | | | | | | | |
|---|---|---|---|---|---|---|---|---|---|---|---|---|
| X, volume / capacity | 0.99 | 1.21 | 0.27 | 0.70 | 0.66 | 0.66 | 1.07 | 0.86 | 0.45 | 0.76 | 0.40 | 0.40 |
| d, Delay for Lane Group [s/veh] | 62.17 | 122.97 | 5.24 | 58.13 | 28.62 | 31.18 | 105.65 | 49.37 | 20.55 | 52.78 | 34.73 | 34.98 |
| Lane Group LOS | E | F | A | E | C | C | F | D | C | D | C | C |
| Critical Lane Group | No | Yes | No | Yes | No | No | No | Yes | No | Yes | No | No |
| 50th-Percentile Queue Length [veh] | 8.62 | 39.10 | 1.41 | 2.22 | 8.24 | 8.84 | 4.53 | 8.79 | 3.86 | 4.15 | 3.89 | 3.54 |
| 50th-Percentile Queue Length [ft] | 215.60 | 977.58 | 35.13 | 55.48 | 205.90 | 221.11 | 113.36 | 219.80 | 96.57 | 103.67 | 97.25 | 88.50 |
| 95th-Percentile Queue Length [veh] | 13.44 | 56.30 | 2.53 | 3.99 | 12.94 | 13.72 | 8.16 | 13.65 | 6.95 | 7.46 | 7.00 | 6.37 |
| 95th-Percentile Queue Length [ft] | 336.00 | 1407.56 | 63.24 | 99.87 | 323.57 | 343.05 | 204.05 | 341.37 | 173.83 | 186.61 | 175.05 | 159.30 |

**Movement, Approach, & Intersection Results**

| | | | | | | | | | | | | |
|---|---|---|---|---|---|---|---|---|---|---|---|---|
| d_M, Delay for Movement [s/veh] | 62.17 | 122.97 | 5.24 | 58.13 | 29.38 | 31.18 | 105.65 | 49.37 | 20.55 | 52.78 | 34.79 | 34.98 |
| Movement LOS | E | F | A | E | C | C | F | D | C | D | C | C |
| d_A, Approach Delay [s/veh] | 99.67 | | | 32.52 | | | 47.90 | | | 43.17 | | |
| Approach LOS | F | | | C | | | D | | | D | | |
| d_I, Intersection Delay [s/veh] | 68.11 | | | | | | | | | | | |
| Intersection LOS | E | | | | | | | | | | | |
| Intersection V/C | 0.980 | | | | | | | | | | | |

## Sequence

| | | | | | | | | | | | | | | | | |
|---|---|---|---|---|---|---|---|---|---|---|---|---|---|---|---|---|
| Ring 1 | 1 | 2 | 3 | 4 | - | - | - | - | - | - | - | - | - | - | - | - |
| Ring 2 | 5 | 6 | 7 | 8 | - | - | - | - | - | - | - | - | - | - | - | - |
| Ring 3 | - | - | - | - | - | - | - | - | - | - | - | - | - | - | - | - |
| Ring 4 | - | - | - | - | - | - | - | - | - | - | - | - | - | - | - | - |

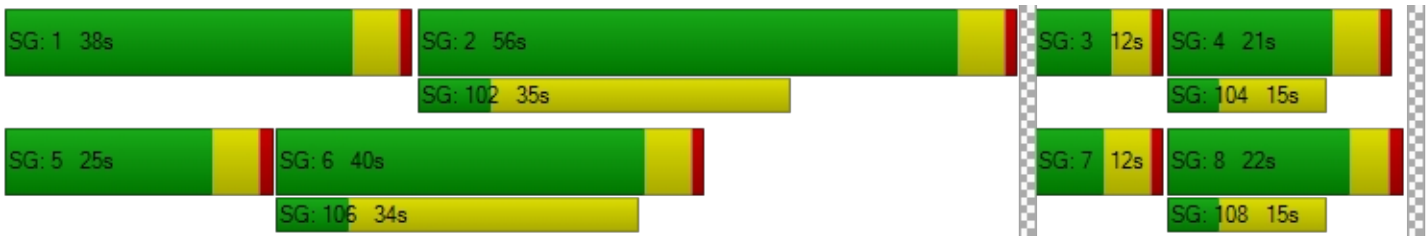

**Intersection Level Of Service Report**
**Intersection 14: Cedar Ave (NS) / I-10 Westbound Ramps (EW)**

| | | | |
|---|---|---|---|
| Control Type: | Signalized | Delay (sec / veh): | 93.6 |
| Analysis Method: | HCM 2010 | Level Of Service: | F |
| Analysis Period: | 15 minutes | Volume to Capacity (v/c): | 1.205 |

**Intersection Setup**

| Name | Cedar Avenue | | | Cedar Avenue | | | | | | I-10 Westbound Ramps | | |
|---|---|---|---|---|---|---|---|---|---|---|---|---|
| Approach | Northbound | | | Southbound | | | Eastbound | | | Westbound | | |
| Lane Configuration | | | | | | | | | | | | |
| Turning Movement | Left | Thru | Right | Left | Thru | Right | Left | Thru | Right | Left | Thru | Right |
| Lane Width [ft] | 12.00 | 12.00 | 12.00 | 12.00 | 12.00 | 12.00 | 12.00 | 12.00 | 12.00 | 12.00 | 12.00 | 12.00 |
| No. of Lanes in Pocket | 1 | 0 | 0 | 0 | 0 | 1 | 0 | 0 | 0 | 0 | 0 | 1 |
| Pocket Length [ft] | 305.00 | 100.00 | 100.00 | 100.00 | 100.00 | 100.00 | 100.00 | 100.00 | 100.00 | 100.00 | 100.00 | 485.00 |
| Speed [mph] | 40.00 | | | 40.00 | | | 30.00 | | | 30.00 | | |
| Grade [%] | 0.00 | | | 0.00 | | | 0.00 | | | 0.00 | | |
| Crosswalk | No | | | No | | | Yes | | | Yes | | |

**volumes**

| Name | Cedar Avenue | | | Cedar Avenue | | | | | | I-10 Westbound Ramps | | |
|---|---|---|---|---|---|---|---|---|---|---|---|---|
| Base Volume Input [veh/h] | 370 | 1850 | 0 | 0 | 1247 | 613 | 0 | 0 | 0 | 470 | 6 | 744 |
| Base Volume Adjustment Factor | 1.0000 | 1.0000 | 1.0000 | 1.0000 | 1.0000 | 1.0000 | 1.0000 | 1.0000 | 1.0000 | 1.0000 | 1.0000 | 1.0000 |
| Heavy Vehicles Percentage [%] | 5.00 | 5.00 | 2.00 | 2.00 | 5.00 | 5.00 | 2.00 | 2.00 | 2.00 | 6.00 | 6.00 | 6.00 |
| Growth Rate | 1.00 | 1.00 | 1.00 | 1.00 | 1.00 | 1.00 | 1.00 | 1.00 | 1.00 | 1.00 | 1.00 | 1.00 |
| In-Process Volume [veh/h] | 0 | 0 | 0 | 0 | 0 | 0 | 0 | 0 | 0 | 0 | 0 | 0 |
| Site-Generated Trips [veh/h] | 0 | 0 | 0 | 0 | 0 | 0 | 0 | 0 | 0 | 0 | 0 | 0 |
| Diverted Trips [veh/h] | 0 | 0 | 0 | 0 | 0 | 0 | 0 | 0 | 0 | 0 | 0 | 0 |
| Pass-by Trips [veh/h] | 0 | 0 | 0 | 0 | 0 | 0 | 0 | 0 | 0 | 0 | 0 | 0 |
| Existing Site Adjustment Volume [veh/h] | 0 | 0 | 0 | 0 | 0 | 0 | 0 | 0 | 0 | 0 | 0 | 0 |
| Other Volume [veh/h] | 0 | 0 | 0 | 0 | 0 | 0 | 0 | 0 | 0 | 0 | 0 | 0 |
| Right-Turn on Red Volume [veh/h] | 0 | 0 | 0 | 0 | 0 | 0 | 0 | 0 | 0 | 0 | 0 | 0 |
| Total Hourly Volume [veh/h] | 370 | 1850 | 0 | 0 | 1247 | 613 | 0 | 0 | 0 | 470 | 6 | 744 |
| Peak Hour Factor | 0.9350 | 0.9350 | 1.0000 | 1.0000 | 0.9350 | 0.9350 | 1.0000 | 1.0000 | 1.0000 | 0.9350 | 0.9350 | 0.9350 |
| Other Adjustment Factor | 1.0000 | 1.0000 | 1.0000 | 1.0000 | 1.0000 | 1.0000 | 1.0000 | 1.0000 | 1.0000 | 1.0000 | 1.0000 | 1.0000 |
| Total 15-Minute Volume [veh/h] | 99 | 495 | 0 | 0 | 333 | 164 | 0 | 0 | 0 | 126 | 2 | 199 |
| Total Analysis Volume [veh/h] | 396 | 1979 | 0 | 0 | 1334 | 656 | 0 | 0 | 0 | 503 | 6 | 796 |
| Presence of On-Street Parking | No | | No | No | | No | | | | No | | No |
| On-Street Parking Maneuver Rate [/h] | 0 | 0 | 0 | 0 | 0 | 0 | 0 | 0 | 0 | 0 | 0 | 0 |
| Local Bus Stopping Rate [/h] | 0 | 0 | 0 | 0 | 0 | 0 | 0 | 0 | 0 | 0 | 0 | 0 |
| Pedestrian Volume [ped/h] | 0 | | | 0 | | | 0 | | | 0 | | |
| Bicycle Volume [bicycles/h] | 0 | | | 0 | | | 0 | | | 0 | | |

**Intersection Settings**

| | |
|---|---|
| Located in CBD | No |
| Signal Coordination Group | 2 - NS - Cedar |
| Cycle Length [s] | 120 |
| Coordination Type | Time of Day Pattern Coordinated |
| Actuation Type | Fully actuated |
| Offset [s] | 85.0 |
| Offset Reference | LagFO |
| Permissive Mode | SingleBand |
| Lost time [s] | 12.00 |

**Phasing & Timing**

| Control Type | Protecte | Permiss | Permiss | Permiss | Permiss | Permiss | Permiss | Permiss | Permiss | Permiss | Permiss | Permiss |
|---|---|---|---|---|---|---|---|---|---|---|---|---|
| Signal group | 5 | 2 | 0 | 0 | 6 | 0 | 0 | 0 | 0 | 0 | 4 | 0 |
| Auxiliary Signal Groups | | | | | | | | | | | | |
| Lead / Lag | Lead | - | - | - | - | - | - | - | - | - | - | - |
| Minimum Green [s] | 5 | 5 | 0 | 0 | 5 | 0 | 0 | 0 | 0 | 0 | 5 | 0 |
| Maximum Green [s] | 30 | 30 | 0 | 0 | 30 | 0 | 0 | 0 | 0 | 0 | 30 | 0 |
| Amber [s] | 4.4 | 4.4 | 0.0 | 0.0 | 4.4 | 0.0 | 0.0 | 0.0 | 0.0 | 0.0 | 3.7 | 0.0 |
| All red [s] | 1.0 | 1.0 | 0.0 | 0.0 | 1.0 | 0.0 | 0.0 | 0.0 | 0.0 | 0.0 | 1.0 | 0.0 |
| Split [s] | 32 | 75 | 0 | 0 | 43 | 0 | 0 | 0 | 0 | 0 | 45 | 0 |
| Vehicle Extension [s] | 3.0 | 3.0 | 0.0 | 0.0 | 3.0 | 0.0 | 0.0 | 0.0 | 0.0 | 0.0 | 3.0 | 0.0 |
| Walk [s] | 0 | 7 | 0 | 0 | 7 | 0 | 0 | 0 | 0 | 0 | 7 | 0 |
| Pedestrian Clearance [s] | 0 | 17 | 0 | 0 | 17 | 0 | 0 | 0 | 0 | 0 | 10 | 0 |
| I1, Start-Up Lost Time [s] | 2.0 | 2.0 | 0.0 | 0.0 | 2.0 | 0.0 | 0.0 | 0.0 | 0.0 | 0.0 | 2.0 | 0.0 |
| I2, Clearance Lost Time [s] | 3.4 | 3.4 | 0.0 | 0.0 | 3.4 | 0.0 | 0.0 | 0.0 | 0.0 | 0.0 | 2.7 | 0.0 |
| Minimum Recall | No | No | | | No | | | | | | No | |
| Maximum Recall | No | No | | | No | | | | | | No | |
| Pedestrian Recall | No | No | | | No | | | | | | No | |
| Detector Location [ft] | 0.0 | 0.0 | 0.0 | 0.0 | 0.0 | 0.0 | 0.0 | 0.0 | 0.0 | 0.0 | 0.0 | 0.0 |
| Detector Length [ft] | 0.0 | 0.0 | 0.0 | 0.0 | 0.0 | 0.0 | 0.0 | 0.0 | 0.0 | 0.0 | 0.0 | 0.0 |
| I, Upstream Filtering Factor | 1.00 | 1.00 | 1.00 | 1.00 | 1.00 | 1.00 | 1.00 | 1.00 | 1.00 | 1.00 | 1.00 | 1.00 |

**Exclusive Pedestrian Phase**

| | |
|---|---|
| Pedestrian Signal Group | 0 |
| Pedestrian Walk [s] | 0 |
| Pedestrian Clearance [s] | 0 |

**Lane Group Calculations**

| Lane Group | L | C | C | R | | C | R |
|---|---|---|---|---|---|---|---|
| L, Total Lost Time per Cycle [s] | 5.40 | 5.40 | 5.40 | 5.40 | | 4.70 | 4.70 |
| l1_p, Permitted Start-Up Lost Time [s] | 0.00 | 0.00 | 0.00 | 0.00 | | 0.00 | 0.00 |
| l2, Clearance Lost Time [s] | 3.40 | 3.40 | 3.40 | 3.40 | | 2.70 | 2.70 |
| g_i, Effective Green Time [s] | 27 | 70 | 38 | 38 | | 40 | 40 |
| g / C, Green / Cycle | 0.22 | 0.58 | 0.31 | 0.31 | | 0.34 | 0.34 |
| (v / s)_i Volume / Saturation Flow Rate | 0.23 | 0.57 | 0.27 | 0.43 | | 0.39 | 0.43 |
| s, saturation flow rate [veh/h] | 1723 | 3445 | 4929 | 1538 | | 1664 | 1524 |
| c, Capacity [veh/h] | 382 | 1999 | 1545 | 482 | | 558 | 511 |
| d1, Uniform Delay [s] | 46.67 | 24.82 | 38.76 | 41.17 | | 39.85 | 39.85 |
| k, delay calibration | 0.44 | 0.50 | 0.50 | 0.50 | | 0.50 | 0.50 |
| I, Upstream Filtering Factor | 1.00 | 1.00 | 1.00 | 1.00 | | 1.00 | 1.00 |
| d2, Incremental Delay [s] | 52.49 | 17.86 | 6.65 | 175.38 | | 94.12 | 139.04 |
| d3, Initial Queue Delay [s] | 0.00 | 0.00 | 0.00 | 0.00 | | 0.00 | 0.00 |
| Rp, platoon ratio | 1.00 | 1.00 | 1.00 | 1.00 | | 1.00 | 1.00 |
| PF, progression factor | 1.00 | 1.00 | 1.00 | 1.00 | | 1.00 | 1.00 |

**Lane Group Results**

| | | | | | | | |
|---|---|---|---|---|---|---|---|
| X, volume / capacity | 1.04 | 0.99 | 0.86 | 1.36 | | 1.17 | 1.28 |
| d, Delay for Lane Group [s/veh] | 99.16 | 42.67 | 45.41 | 216.56 | | 133.97 | 178.89 |
| Lane Group LOS | F | D | D | F | | F | F |
| Critical Lane Group | Yes | No | No | Yes | | No | Yes |
| 50th-Percentile Queue Length [veh] | 16.68 | 29.73 | 12.87 | 37.21 | | 30.76 | 34.55 |
| 50th-Percentile Queue Length [ft] | 417.00 | 743.19 | 321.66 | 930.22 | | 769.09 | 863.75 |
| 95th-Percentile Queue Length [veh] | 23.85 | 38.67 | 18.75 | 56.02 | | 44.02 | 51.11 |
| 95th-Percentile Queue Length [ft] | 596.24 | 966.74 | 468.73 | 1400.59 | | 1100.49 | 1277.71 |

**Movement, Approach, & Intersection Results**

| | | | | | | | | | | | | |
|---|---|---|---|---|---|---|---|---|---|---|---|---|
| d_M, Delay for Movement [s/veh] | 99.16 | 42.67 | 0.00 | 0.00 | 45.41 | 216.56 | 0.00 | 0.00 | 0.00 | 133.97 | 133.97 | 170.79 |
| Movement LOS | F | D | | | D | F | | | | F | F | F |
| d_A, Approach Delay [s/veh] | 52.09 | | | 101.83 | | | 0.00 | | | 156.43 | | |
| Approach LOS | D | | | F | | | A | | | F | | |
| d_I, Intersection Delay [s/veh] | 93.56 | | | | | | | | | | | |
| Intersection LOS | F | | | | | | | | | | | |
| Intersection V/C | 1.205 | | | | | | | | | | | |

## Sequence

| | | | | | | | | | | | | | | | | |
|---|---|---|---|---|---|---|---|---|---|---|---|---|---|---|---|---|
| Ring 1 | - | 2 | 4 | - | - | - | - | - | - | - | - | - | - | - | - | - |
| Ring 2 | 5 | 6 | - | - | - | - | - | - | - | - | - | - | - | - | - | - |
| Ring 3 | - | - | - | - | - | - | - | - | - | - | - | - | - | - | - | - |
| Ring 4 | - | - | - | - | - | - | - | - | - | - | - | - | - | - | - | - |

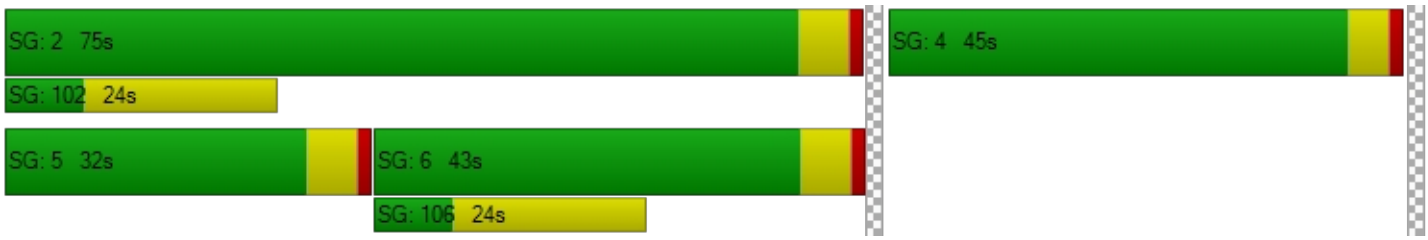

**Intersection Level Of Service Report**
**Intersection 15: Cedar Ave (NS) / I-10 Eastbound Ramps (EW)**

| | | | |
|---|---|---|---|
| Control Type: | Signalized | Delay (sec / veh): | 84.5 |
| Analysis Method: | HCM 2010 | Level Of Service: | F |
| Analysis Period: | 15 minutes | Volume to Capacity (v/c): | 1.128 |

**Intersection Setup**

| Name | Cedar Avenue | | | Cedar Avenue | | | | | | I-10 Eastbound Ramps | | |
|---|---|---|---|---|---|---|---|---|---|---|---|---|
| Approach | Northbound | | | Southbound | | | Eastbound | | | Westbound | | |
| Lane Configuration | | | | | | | | | | | | |
| Turning Movement | Left | Thru | Right | Left | Thru | Right | Left | Thru | Right | Left | Thru | Right |
| Lane Width [ft] | 12.00 | 12.00 | 12.00 | 12.00 | 12.00 | 12.00 | 12.00 | 12.00 | 12.00 | 12.00 | 12.00 | 12.00 |
| No. of Lanes in Pocket | 0 | 0 | 1 | 1 | 0 | 0 | 1 | 0 | 0 | 0 | 0 | 0 |
| Pocket Length [ft] | 100.00 | 100.00 | 555.00 | 305.00 | 100.00 | 100.00 | 340.00 | 100.00 | 100.00 | 100.00 | 100.00 | 100.00 |
| Speed [mph] | 40.00 | | | 40.00 | | | 30.00 | | | 30.00 | | |
| Grade [%] | 0.00 | | | 0.00 | | | 0.00 | | | 0.00 | | |
| Crosswalk | No | | | No | | | Yes | | | Yes | | |

**volumes**

| Name | Cedar Avenue | | | Cedar Avenue | | | | | | I-10 Eastbound Ramps | | |
|---|---|---|---|---|---|---|---|---|---|---|---|---|
| Base Volume Input [veh/h] | 0 | 1215 | 415 | 462 | 1278 | 0 | 1025 | 3 | 273 | 0 | 0 | 0 |
| Base Volume Adjustment Factor | 1.0000 | 1.0000 | 1.0000 | 1.0000 | 1.0000 | 1.0000 | 1.0000 | 1.0000 | 1.0000 | 1.0000 | 1.0000 | 1.0000 |
| Heavy Vehicles Percentage [%] | 2.00 | 5.00 | 5.00 | 5.00 | 5.00 | 2.00 | 6.00 | 6.00 | 6.00 | 2.00 | 2.00 | 2.00 |
| Growth Rate | 1.00 | 1.00 | 1.00 | 1.00 | 1.00 | 1.00 | 1.00 | 1.00 | 1.00 | 1.00 | 1.00 | 1.00 |
| In-Process Volume [veh/h] | 0 | 0 | 0 | 0 | 0 | 0 | 0 | 0 | 0 | 0 | 0 | 0 |
| Site-Generated Trips [veh/h] | 0 | 0 | 0 | 0 | 0 | 0 | 0 | 0 | 0 | 0 | 0 | 0 |
| Diverted Trips [veh/h] | 0 | 0 | 0 | 0 | 0 | 0 | 0 | 0 | 0 | 0 | 0 | 0 |
| Pass-by Trips [veh/h] | 0 | 0 | 0 | 0 | 0 | 0 | 0 | 0 | 0 | 0 | 0 | 0 |
| Existing Site Adjustment Volume [veh/h] | 0 | 0 | 0 | 0 | 0 | 0 | 0 | 0 | 0 | 0 | 0 | 0 |
| Other Volume [veh/h] | 0 | 0 | 0 | 0 | 0 | 0 | 0 | 0 | 0 | 0 | 0 | 0 |
| Right-Turn on Red Volume [veh/h] | 0 | 0 | 0 | 0 | 0 | 0 | 0 | 0 | 0 | 0 | 0 | 0 |
| Total Hourly Volume [veh/h] | 0 | 1215 | 415 | 462 | 1278 | 0 | 1025 | 3 | 273 | 0 | 0 | 0 |
| Peak Hour Factor | 1.0000 | 0.9240 | 0.9240 | 0.9240 | 0.9240 | 1.0000 | 0.9240 | 0.9240 | 0.9240 | 1.0000 | 1.0000 | 1.0000 |
| Other Adjustment Factor | 1.0000 | 1.0000 | 1.0000 | 1.0000 | 1.0000 | 1.0000 | 1.0000 | 1.0000 | 1.0000 | 1.0000 | 1.0000 | 1.0000 |
| Total 15-Minute Volume [veh/h] | 0 | 329 | 112 | 125 | 346 | 0 | 277 | 1 | 74 | 0 | 0 | 0 |
| Total Analysis Volume [veh/h] | 0 | 1315 | 449 | 500 | 1383 | 0 | 1109 | 3 | 295 | 0 | 0 | 0 |
| Presence of On-Street Parking | No | | No | No | | No | No | | No | | | |
| On-Street Parking Maneuver Rate [/h] | 0 | 0 | 0 | 0 | 0 | 0 | 0 | 0 | 0 | 0 | 0 | 0 |
| Local Bus Stopping Rate [/h] | 0 | 0 | 0 | 0 | 0 | 0 | 0 | 0 | 0 | 0 | 0 | 0 |
| Pedestrian Volume [ped/h] | 0 | | | 0 | | | 0 | | | 0 | | |
| Bicycle Volume [bicycles/h] | 0 | | | 0 | | | 0 | | | 0 | | |

**Intersection Settings**

| | |
|---|---|
| Located in CBD | No |
| Signal Coordination Group | 2 - NS - Cedar |
| Cycle Length [s] | 120 |
| Coordination Type | Time of Day Pattern Coordinated |
| Actuation Type | Fully actuated |
| Offset [s] | 79.0 |
| Offset Reference | LagFO |
| Permissive Mode | SingleBand |
| Lost time [s] | 12.00 |

**Phasing & Timing**

| Control Type | Permiss | Permiss | Permiss | Protecte | Permiss | Permiss | Permiss | Permiss | Permiss | Permiss | Permiss | Permiss |
|---|---|---|---|---|---|---|---|---|---|---|---|---|
| Signal group | 0 | 2 | 0 | 1 | 6 | 0 | 0 | 8 | 0 | 0 | 0 | 0 |
| Auxiliary Signal Groups | | | | | | | | | | | | |
| Lead / Lag | - | - | - | Lead | - | - | - | - | - | - | - | - |
| Minimum Green [s] | 0 | 5 | 0 | 5 | 5 | 0 | 0 | 5 | 0 | 0 | 0 | 0 |
| Maximum Green [s] | 0 | 30 | 0 | 30 | 30 | 0 | 0 | 30 | 0 | 0 | 0 | 0 |
| Amber [s] | 0.0 | 4.4 | 0.0 | 4.4 | 4.4 | 0.0 | 0.0 | 3.7 | 0.0 | 0.0 | 0.0 | 0.0 |
| All red [s] | 0.0 | 1.0 | 0.0 | 1.0 | 1.0 | 0.0 | 0.0 | 1.0 | 0.0 | 0.0 | 0.0 | 0.0 |
| Split [s] | 0 | 38 | 0 | 33 | 71 | 0 | 0 | 49 | 0 | 0 | 0 | 0 |
| Vehicle Extension [s] | 0.0 | 3.0 | 0.0 | 3.0 | 3.0 | 0.0 | 0.0 | 3.0 | 0.0 | 0.0 | 0.0 | 0.0 |
| Walk [s] | 0 | 7 | 0 | 0 | 7 | 0 | 0 | 7 | 0 | 0 | 0 | 0 |
| Pedestrian Clearance [s] | 0 | 21 | 0 | 0 | 16 | 0 | 0 | 10 | 0 | 0 | 0 | 0 |
| I1, Start-Up Lost Time [s] | 0.0 | 2.0 | 0.0 | 2.0 | 2.0 | 0.0 | 0.0 | 2.0 | 0.0 | 0.0 | 0.0 | 0.0 |
| I2, Clearance Lost Time [s] | 0.0 | 3.4 | 0.0 | 3.4 | 3.4 | 0.0 | 0.0 | 2.7 | 0.0 | 0.0 | 0.0 | 0.0 |
| Minimum Recall | | No | | No | No | | | No | | | | |
| Maximum Recall | | No | | No | No | | | No | | | | |
| Pedestrian Recall | | No | | No | No | | | No | | | | |
| Detector Location [ft] | 0.0 | 0.0 | 0.0 | 0.0 | 0.0 | 0.0 | 0.0 | 0.0 | 0.0 | 0.0 | 0.0 | 0.0 |
| Detector Length [ft] | 0.0 | 0.0 | 0.0 | 0.0 | 0.0 | 0.0 | 0.0 | 0.0 | 0.0 | 0.0 | 0.0 | 0.0 |
| I, Upstream Filtering Factor | 1.00 | 1.00 | 1.00 | 1.00 | 1.00 | 1.00 | 1.00 | 1.00 | 1.00 | 1.00 | 1.00 | 1.00 |

**Exclusive Pedestrian Phase**

| | |
|---|---|
| Pedestrian Signal Group | 0 |
| Pedestrian Walk [s] | 0 |
| Pedestrian Clearance [s] | 0 |

**Lane Group Calculations**

| Lane Group | C | R | L | C | L | C | |
|---|---|---|---|---|---|---|---|
| L, Total Lost Time per Cycle [s] | 5.40 | 5.40 | 5.40 | 5.40 | 4.70 | 4.70 | |
| l1_p, Permitted Start-Up Lost Time [s] | 0.00 | 0.00 | 0.00 | 0.00 | 0.00 | 0.00 | |
| l2, Clearance Lost Time [s] | 3.40 | 3.40 | 3.40 | 3.40 | 2.70 | 2.70 | |
| g_i, Effective Green Time [s] | 33 | 33 | 28 | 66 | 44 | 44 | |
| g / C, Green / Cycle | 0.27 | 0.27 | 0.23 | 0.55 | 0.37 | 0.37 | |
| (v / s)_i Volume / Saturation Flow Rate | 0.27 | 0.29 | 0.29 | 0.40 | 0.41 | 0.43 | |
| s, saturation flow rate [veh/h] | 4929 | 1538 | 1723 | 3445 | 1707 | 1625 | |
| c, Capacity [veh/h] | 1342 | 419 | 397 | 1886 | 629 | 599 | |
| d1, Uniform Delay [s] | 43.32 | 43.65 | 46.17 | 20.52 | 37.88 | 37.88 | |
| k, delay calibration | 0.50 | 0.50 | 0.50 | 0.50 | 0.50 | 0.50 | |
| I, Upstream Filtering Factor | 1.00 | 1.00 | 1.00 | 1.00 | 1.00 | 1.00 | |
| d2, Incremental Delay [s] | 20.23 | 64.64 | 136.10 | 2.57 | 73.15 | 95.43 | |
| d3, Initial Queue Delay [s] | 0.00 | 0.00 | 0.00 | 0.00 | 0.00 | 0.00 | |
| Rp, platoon ratio | 1.00 | 1.00 | 1.00 | 1.00 | 1.00 | 1.00 | |
| PF, progression factor | 1.00 | 1.00 | 1.00 | 1.00 | 1.00 | 1.00 | |

**Lane Group Results**

| | | | | | | | |
|---|---|---|---|---|---|---|---|
| X, volume / capacity | 0.98 | 1.07 | 1.26 | 0.73 | 1.12 | 1.18 | |
| d, Delay for Lane Group [s/veh] | 63.55 | 108.28 | 182.27 | 23.09 | 111.03 | 133.31 | |
| Lane Group LOS | E | F | F | C | F | F | |
| Critical Lane Group | No | Yes | Yes | No | No | Yes | |
| 50th-Percentile Queue Length [veh] | 15.02 | 19.56 | 26.50 | 14.25 | 30.85 | 33.08 | |
| 50th-Percentile Queue Length [ft] | 375.57 | 488.93 | 662.47 | 356.37 | 771.19 | 826.89 | |
| 95th-Percentile Queue Length [veh] | 21.38 | 27.97 | 39.42 | 20.45 | 43.13 | 47.26 | |
| 95th-Percentile Queue Length [ft] | 534.49 | 699.19 | 985.42 | 511.17 | 1078.16 | 1181.42 | |

**Movement, Approach, & Intersection Results**

| | | | | | | | | | | | | |
|---|---|---|---|---|---|---|---|---|---|---|---|---|
| d_M, Delay for Movement [s/veh] | 0.00 | 63.55 | 108.28 | 182.27 | 23.09 | 0.00 | 119.17 | 133.31 | 133.31 | 0.00 | 0.00 | 0.00 |
| Movement LOS | | E | F | F | C | | F | F | F | | | |
| d_A, Approach Delay [s/veh] | 74.94 | | | 65.36 | | | 122.17 | | | 0.00 | | |
| Approach LOS | E | | | E | | | F | | | A | | |
| d_I, Intersection Delay [s/veh] | 84.52 | | | | | | | | | | | |
| Intersection LOS | F | | | | | | | | | | | |
| Intersection V/C | 1.128 | | | | | | | | | | | |

## Sequence

| | | | | | | | | | | | | | | | | |
|---|---|---|---|---|---|---|---|---|---|---|---|---|---|---|---|---|
| Ring 1 | 1 | 2 | - | - | - | - | - | - | - | - | - | - | - | - | - | - |
| Ring 2 | - | 6 | 8 | - | - | - | - | - | - | - | - | - | - | - | - | - |
| Ring 3 | - | - | - | - | - | - | - | - | - | - | - | - | - | - | - | - |
| Ring 4 | - | - | - | - | - | - | - | - | - | - | - | - | - | - | - | - |

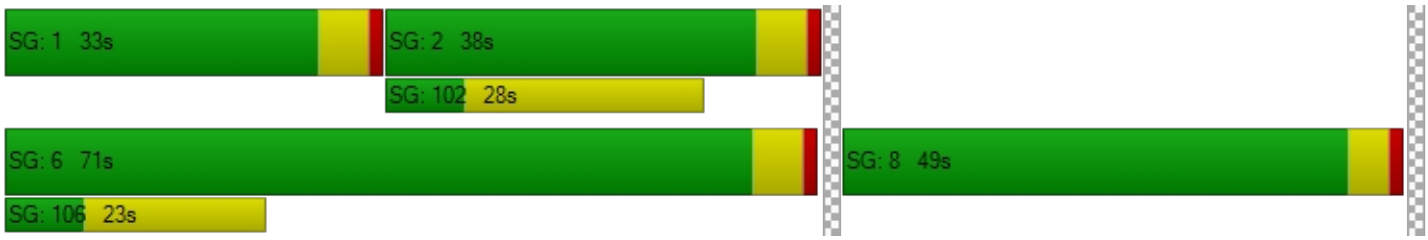

**Intersection Level Of Service Report**
**Intersection 16: Cedar Ave (NS) / Slover Ave (EW)**

| | | | |
|---|---|---|---|
| Control Type: | Signalized | Delay (sec / veh): | 175.3 |
| Analysis Method: | HCM 2010 | Level Of Service: | F |
| Analysis Period: | 15 minutes | Volume to Capacity (v/c): | 0.927 |

**Intersection Setup**

| Name | Cedar Avenue | | | Cedar Avenue | | | Slover Avenue | | | Slover Avenue | | |
|---|---|---|---|---|---|---|---|---|---|---|---|---|
| Approach | Northbound | | | Southbound | | | Eastbound | | | Westbound | | |
| Lane Configuration | | | | | | | | | | | | |
| Turning Movement | Left | Thru | Right | Left | Thru | Right | Left | Thru | Right | Left | Thru | Right |
| Lane Width [ft] | 12.00 | 12.00 | 12.00 | 12.00 | 12.00 | 12.00 | 12.00 | 12.00 | 12.00 | 12.00 | 12.00 | 12.00 |
| No. of Lanes in Pocket | 1 | 0 | 0 | 1 | 0 | 0 | 1 | 0 | 0 | 1 | 0 | 0 |
| Pocket Length [ft] | 200.00 | 100.00 | 100.00 | 85.00 | 100.00 | 100.00 | 185.00 | 100.00 | 100.00 | 150.00 | 100.00 | 100.00 |
| Speed [mph] | 45.00 | | | 45.00 | | | 50.00 | | | 50.00 | | |
| Grade [%] | 0.00 | | | 0.00 | | | 0.00 | | | 0.00 | | |
| Crosswalk | Yes | | | Yes | | | Yes | | | Yes | | |

**volumes**

| Name | Cedar Avenue | | | Cedar Avenue | | | Slover Avenue | | | Slover Avenue | | |
|---|---|---|---|---|---|---|---|---|---|---|---|---|
| Base Volume Input [veh/h] | 115 | 796 | 9 | 62 | 792 | 287 | 507 | 189 | 74 | 16 | 179 | 95 |
| Base Volume Adjustment Factor | 1.0000 | 1.0000 | 1.0000 | 1.0000 | 1.0000 | 1.0000 | 1.0000 | 1.0000 | 1.0000 | 1.0000 | 1.0000 | 1.0000 |
| Heavy Vehicles Percentage [%] | 5.00 | 5.00 | 5.00 | 5.00 | 5.00 | 5.00 | 2.00 | 2.00 | 2.00 | 2.00 | 2.00 | 2.00 |
| Growth Rate | 1.00 | 1.00 | 1.00 | 1.00 | 1.00 | 1.00 | 1.00 | 1.00 | 1.00 | 1.00 | 1.00 | 1.00 |
| In-Process Volume [veh/h] | 0 | 0 | 0 | 0 | 0 | 0 | 0 | 0 | 0 | 0 | 0 | 0 |
| Site-Generated Trips [veh/h] | 0 | 0 | 0 | 0 | 0 | 0 | 0 | 0 | 0 | 0 | 0 | 0 |
| Diverted Trips [veh/h] | 0 | 0 | 0 | 0 | 0 | 0 | 0 | 0 | 0 | 0 | 0 | 0 |
| Pass-by Trips [veh/h] | 0 | 0 | 0 | 0 | 0 | 0 | 0 | 0 | 0 | 0 | 0 | 0 |
| Existing Site Adjustment Volume [veh/h] | 0 | 0 | 0 | 0 | 0 | 0 | 0 | 0 | 0 | 0 | 0 | 0 |
| Other Volume [veh/h] | 0 | 0 | 0 | 0 | 0 | 0 | 0 | 0 | 0 | 0 | 0 | 0 |
| Right-Turn on Red Volume [veh/h] | 0 | 0 | 0 | 0 | 0 | 0 | 0 | 0 | 0 | 0 | 0 | 0 |
| Total Hourly Volume [veh/h] | 115 | 796 | 9 | 62 | 792 | 287 | 507 | 189 | 74 | 16 | 179 | 95 |
| Peak Hour Factor | 0.8589 | 0.8890 | 0.8890 | 0.8890 | 0.8890 | 0.8890 | 0.8890 | 0.8890 | 0.8890 | 0.8890 | 0.8890 | 0.8890 |
| Other Adjustment Factor | 1.0000 | 1.0000 | 1.0000 | 1.0000 | 1.0000 | 1.0000 | 1.0000 | 1.0000 | 1.0000 | 1.0000 | 1.0000 | 1.0000 |
| Total 15-Minute Volume [veh/h] | 33 | 224 | 3 | 17 | 223 | 81 | 143 | 53 | 21 | 4 | 50 | 27 |
| Total Analysis Volume [veh/h] | 134 | 895 | 10 | 70 | 891 | 323 | 570 | 213 | 83 | 18 | 201 | 107 |
| Presence of On-Street Parking | No | | No | No | | No | No | | No | No | | No |
| On-Street Parking Maneuver Rate [/h] | 0 | 0 | 0 | 0 | 0 | 0 | 0 | 0 | 0 | 0 | 0 | 0 |
| Local Bus Stopping Rate [/h] | 0 | 0 | 0 | 0 | 0 | 0 | 0 | 0 | 0 | 0 | 0 | 0 |
| Pedestrian Volume [ped/h] | 0 | | | 0 | | | 0 | | | 0 | | |
| Bicycle Volume [bicycles/h] | 0 | | | 0 | | | 0 | | | 0 | | |

**Intersection Settings**

| | |
|---|---|
| Located in CBD | No |
| Signal Coordination Group | 2 - NS - Cedar |
| Cycle Length [s] | 120 |
| Coordination Type | Time of Day Pattern Coordinated |
| Actuation Type | Fully actuated |
| Offset [s] | 31.0 |
| Offset Reference | LagFO |
| Permissive Mode | SingleBand |
| Lost time [s] | 16.00 |

**Phasing & Timing**

| Control Type | Protecte | Permiss | Permiss | Protecte | Permiss | Permiss | Protecte | Permiss | Permiss | Protecte | Permiss | Overlap |
|---|---|---|---|---|---|---|---|---|---|---|---|---|
| Signal group | 5 | 2 | 0 | 1 | 6 | 0 | 3 | 8 | 0 | 7 | 4 | 4 |
| Auxiliary Signal Groups | | | | | | | | | | | | 1,4 |
| Lead / Lag | Lead | - | - | Lead | - | - | Lead | - | - | Lead | - | - |
| Minimum Green [s] | 5 | 5 | 0 | 5 | 5 | 0 | 5 | 5 | 0 | 5 | 5 | 5 |
| Maximum Green [s] | 30 | 30 | 0 | 30 | 30 | 0 | 30 | 30 | 0 | 30 | 30 | 30 |
| Amber [s] | 4.8 | 4.8 | 0.0 | 4.8 | 4.8 | 0.0 | 5.2 | 5.2 | 0.0 | 5.2 | 5.2 | 5.2 |
| All red [s] | 1.0 | 1.0 | 0.0 | 1.0 | 1.0 | 0.0 | 1.0 | 1.0 | 0.0 | 1.0 | 1.0 | 1.0 |
| Split [s] | 11 | 45 | 0 | 11 | 45 | 0 | 19 | 52 | 0 | 12 | 45 | 45 |
| Vehicle Extension [s] | 3.0 | 3.0 | 0.0 | 3.0 | 3.0 | 0.0 | 3.0 | 3.0 | 0.0 | 3.0 | 3.0 | 3.0 |
| Walk [s] | 0 | 7 | 0 | 0 | 7 | 0 | 0 | 7 | 0 | 0 | 7 | 7 |
| Pedestrian Clearance [s] | 0 | 31 | 0 | 0 | 20 | 0 | 0 | 26 | 0 | 0 | 31 | 31 |
| I1, Start-Up Lost Time [s] | 2.0 | 2.0 | 0.0 | 2.0 | 2.0 | 0.0 | 2.0 | 2.0 | 0.0 | 2.0 | 2.0 | 2.0 |
| I2, Clearance Lost Time [s] | 3.8 | 3.8 | 0.0 | 3.8 | 3.8 | 0.0 | 4.2 | 4.2 | 0.0 | 4.2 | 4.2 | 4.2 |
| Minimum Recall | No | No | | No | No | | No | No | | No | No | No |
| Maximum Recall | No | No | | No | No | | No | No | | No | No | No |
| Pedestrian Recall | No | No | | No | No | | No | No | | No | No | No |
| Detector Location [ft] | 0.0 | 0.0 | 0.0 | 0.0 | 0.0 | 0.0 | 0.0 | 0.0 | 0.0 | 0.0 | 0.0 | 0.0 |
| Detector Length [ft] | 0.0 | 0.0 | 0.0 | 0.0 | 0.0 | 0.0 | 0.0 | 0.0 | 0.0 | 0.0 | 0.0 | 0.0 |
| I, Upstream Filtering Factor | 1.00 | 1.00 | 1.00 | 1.00 | 1.00 | 1.00 | 1.00 | 1.00 | 1.00 | 1.00 | 1.00 | 1.00 |

**Exclusive Pedestrian Phase**

| | |
|---|---|
| Pedestrian Signal Group | 0 |
| Pedestrian Walk [s] | 0 |
| Pedestrian Clearance [s] | 0 |

**Lane Group Calculations**

| Lane Group | L | C | C | L | C | C | L | C | L | C | R |
|---|---|---|---|---|---|---|---|---|---|---|---|
| L, Total Lost Time per Cycle [s] | 5.80 | 5.80 | 5.80 | 5.80 | 5.80 | 5.80 | 6.20 | 6.20 | 6.20 | 6.20 | 5.80 |
| l1_p, Permitted Start-Up Lost Time [s] | 0.00 | 0.00 | 0.00 | 0.00 | 0.00 | 0.00 | 0.00 | 0.00 | 0.00 | 0.00 | 0.00 |
| l2, Clearance Lost Time [s] | 0.00 | 3.80 | 3.80 | 0.00 | 3.80 | 3.80 | 4.20 | 4.20 | 4.20 | 4.20 | 0.00 |
| g_i, Effective Green Time [s] | 74 | 63 | 63 | 74 | 63 | 63 | 13 | 26 | 2 | 15 | 27 |
| g / C, Green / Cycle | 0.61 | 0.52 | 0.52 | 0.61 | 0.52 | 0.52 | 0.11 | 0.22 | 0.02 | 0.13 | 0.22 |
| (v / s)_i Volume / Saturation Flow Rate | 0.22 | 0.25 | 0.25 | 0.10 | 0.35 | 0.35 | 0.32 | 0.17 | 0.01 | 0.11 | 0.07 |
| s, saturation flow rate [veh/h] | 599 | 1810 | 1802 | 735 | 1810 | 1648 | 1774 | 1775 | 1774 | 1863 | 1583 |
| c, Capacity [veh/h] | 360 | 942 | 939 | 465 | 946 | 862 | 190 | 383 | 35 | 239 | 355 |
| d1, Uniform Delay [s] | 10.63 | 10.91 | 10.91 | 5.80 | 12.29 | 12.35 | 53.61 | 44.34 | 58.29 | 51.15 | 38.78 |
| k, delay calibration | 0.50 | 0.50 | 0.50 | 0.50 | 0.50 | 0.50 | 0.50 | 0.11 | 0.11 | 0.11 | 0.42 |
| I, Upstream Filtering Factor | 1.00 | 1.00 | 1.00 | 1.00 | 1.00 | 1.00 | 1.00 | 1.00 | 1.00 | 1.00 | 1.00 |
| d2, Incremental Delay [s] | 2.94 | 1.76 | 1.77 | 0.68 | 3.75 | 4.22 | 913.45 | 3.36 | 11.14 | 7.79 | 1.84 |
| d3, Initial Queue Delay [s] | 0.00 | 0.00 | 0.00 | 0.00 | 0.00 | 0.00 | 0.00 | 0.00 | 0.00 | 0.00 | 0.00 |
| Rp, platoon ratio | 1.33 | 1.33 | 1.33 | 1.33 | 1.33 | 1.33 | 1.00 | 1.00 | 1.00 | 1.00 | 1.00 |
| PF, progression factor | 1.00 | 1.00 | 1.00 | 1.00 | 1.00 | 1.00 | 1.00 | 1.00 | 1.00 | 1.00 | 1.00 |

**Lane Group Results**

| | | | | | | | | | | | |
|---|---|---|---|---|---|---|---|---|---|---|---|
| X, volume / capacity | 0.37 | 0.48 | 0.48 | 0.15 | 0.67 | 0.67 | 3.00 | 0.77 | 0.51 | 0.84 | 0.30 |
| d, Delay for Lane Group [s/veh] | 13.57 | 12.67 | 12.68 | 6.49 | 16.04 | 16.57 | 967.06 | 47.70 | 69.43 | 58.95 | 40.63 |
| Lane Group LOS | B | B | B | A | B | B | F | D | E | E | D |
| Critical Lane Group | Yes | No | No | No | No | Yes | Yes | No | No | Yes | No |
| 50th-Percentile Queue Length [veh] | 0.90 | 4.72 | 4.70 | 0.40 | 7.33 | 6.86 | 53.76 | 8.30 | 0.63 | 6.21 | 2.72 |
| 50th-Percentile Queue Length [ft] | 22.61 | 117.92 | 117.51 | 10.04 | 183.22 | 171.38 | 1344.04 | 207.54 | 15.85 | 155.36 | 67.96 |
| 95th-Percentile Queue Length [veh] | 1.63 | 8.28 | 8.26 | 0.72 | 11.77 | 11.15 | 82.84 | 13.03 | 1.14 | 10.30 | 4.89 |
| 95th-Percentile Queue Length [ft] | 40.70 | 206.97 | 206.40 | 18.08 | 294.21 | 278.72 | 2070.90 | 325.68 | 28.54 | 257.56 | 122.33 |

**Movement, Approach, & Intersection Results**

| | | | | | | | | | | | | |
|---|---|---|---|---|---|---|---|---|---|---|---|---|
| d_M, Delay for Movement [s/veh] | 13.57 | 12.67 | 12.68 | 6.49 | 16.19 | 16.57 | 967.06 | 47.70 | 47.70 | 69.43 | 58.95 | 40.63 |
| Movement LOS | B | B | B | A | B | B | F | D | D | E | E | D |
| d_A, Approach Delay [s/veh] | 12.79 | | | 15.76 | | | 652.82 | | | 53.51 | | |
| Approach LOS | B | | | B | | | F | | | D | | |
| d_I, Intersection Delay [s/veh] | 175.34 | | | | | | | | | | | |
| Intersection LOS | F | | | | | | | | | | | |
| Intersection V/C | 0.927 | | | | | | | | | | | |

## Sequence

| | | | | | | | | | | | | | | | | |
|---|---|---|---|---|---|---|---|---|---|---|---|---|---|---|---|---|
| Ring 1 | 1 | 2 | 3 | 4 | - | - | - | - | - | - | - | - | - | - | - | - |
| Ring 2 | 5 | 6 | 7 | 8 | - | - | - | - | - | - | - | - | - | - | - | - |
| Ring 3 | - | - | - | - | - | - | - | - | - | - | - | - | - | - | - | - |
| Ring 4 | - | - | - | - | - | - | - | - | - | - | - | - | - | - | - | - |

# Year 2035 with Project with Improvements Level of Service Calculations

**Intersection Level Of Service Report**
**Intersection 1: Sierra Ave (NS) / San Bernardino Ave (EW)**

| | | | |
|---|---|---|---|
| Control Type: | Signalized | Delay (sec / veh): | 29.6 |
| Analysis Method: | HCM 2010 | Level Of Service: | C |
| Analysis Period: | 15 minutes | Volume to Capacity (v/c): | 0.737 |

**Intersection Setup**

| Name | Sierra Avenue | | | Sierra Avenue | | | San Bernardino Avenue | | | San Bernardino Avenue | | |
|---|---|---|---|---|---|---|---|---|---|---|---|---|
| Approach | Northbound | | | Southbound | | | Eastbound | | | Westbound | | |
| Lane Configuration | | | | | | | | | | | | |
| Turning Movement | Left | Thru | Right | Left | Thru | Right | Left | Thru | Right | Left | Thru | Right |
| Lane Width [ft] | 12.00 | 12.00 | 12.00 | 12.00 | 12.00 | 12.00 | 12.00 | 12.00 | 12.00 | 12.00 | 12.00 | 12.00 |
| No. of Lanes in Pocket | 1 | 0 | 1 | 1 | 0 | 0 | 1 | 0 | 0 | 1 | 0 | 0 |
| Pocket Length [ft] | 140.00 | 100.00 | 140.00 | 150.00 | 100.00 | 100.00 | 150.00 | 100.00 | 100.00 | 240.00 | 100.00 | 100.00 |
| Speed [mph] | 35.00 | | | 35.00 | | | 35.00 | | | 30.00 | | |
| Grade [%] | 0.00 | | | 0.00 | | | 0.00 | | | 0.00 | | |
| Crosswalk | Yes | | | Yes | | | Yes | | | Yes | | |

**volumes**

| Name | Sierra Avenue | | | Sierra Avenue | | | San Bernardino Avenue | | | San Bernardino Avenue | | |
|---|---|---|---|---|---|---|---|---|---|---|---|---|
| Base Volume Input [veh/h] | 75 | 676 | 99 | 49 | 1242 | 79 | 86 | 302 | 112 | 187 | 255 | 27 |
| Base Volume Adjustment Factor | 1.0000 | 1.0000 | 1.0000 | 1.0000 | 1.0000 | 1.0000 | 1.0000 | 1.0000 | 1.0000 | 1.0000 | 1.0000 | 1.0000 |
| Heavy Vehicles Percentage [%] | 2.00 | 2.00 | 2.00 | 2.00 | 2.00 | 2.00 | 2.00 | 2.00 | 2.00 | 2.00 | 2.00 | 2.00 |
| Growth Rate | 1.00 | 1.00 | 1.00 | 1.00 | 1.00 | 1.00 | 1.00 | 1.00 | 1.00 | 1.00 | 1.00 | 1.00 |
| In-Process Volume [veh/h] | 0 | 0 | 0 | 0 | 0 | 0 | 0 | 0 | 0 | 0 | 0 | 0 |
| Site-Generated Trips [veh/h] | 0 | 0 | 0 | 0 | 0 | 0 | 0 | 0 | 0 | 0 | 0 | 0 |
| Diverted Trips [veh/h] | 0 | 0 | 0 | 0 | 0 | 0 | 0 | 0 | 0 | 0 | 0 | 0 |
| Pass-by Trips [veh/h] | 0 | 0 | 0 | 0 | 0 | 0 | 0 | 0 | 0 | 0 | 0 | 0 |
| Existing Site Adjustment Volume [veh/h] | 0 | 0 | 0 | 0 | 0 | 0 | 0 | 0 | 0 | 0 | 0 | 0 |
| Other Volume [veh/h] | 0 | 0 | 0 | 0 | 0 | 0 | 0 | 0 | 0 | 0 | 0 | 0 |
| Right-Turn on Red Volume [veh/h] | 0 | 0 | 0 | 0 | 0 | 0 | 0 | 0 | 0 | 0 | 0 | 0 |
| Total Hourly Volume [veh/h] | 75 | 676 | 99 | 49 | 1242 | 79 | 86 | 302 | 112 | 187 | 255 | 27 |
| Peak Hour Factor | 0.9020 | 0.9020 | 0.9020 | 0.9020 | 0.9200 | 0.9020 | 0.9020 | 0.9020 | 0.9020 | 0.9020 | 0.9020 | 0.9020 |
| Other Adjustment Factor | 1.0000 | 1.0000 | 1.0000 | 1.0000 | 1.0000 | 1.0000 | 1.0000 | 1.0000 | 1.0000 | 1.0000 | 1.0000 | 1.0000 |
| Total 15-Minute Volume [veh/h] | 21 | 187 | 27 | 14 | 338 | 22 | 24 | 84 | 31 | 52 | 71 | 7 |
| Total Analysis Volume [veh/h] | 83 | 749 | 110 | 54 | 1350 | 88 | 95 | 335 | 124 | 207 | 283 | 30 |
| Presence of On-Street Parking | No | | No | No | | No | No | | No | No | | No |
| On-Street Parking Maneuver Rate [/h] | 0 | 0 | 0 | 0 | 0 | 0 | 0 | 0 | 0 | 0 | 0 | 0 |
| Local Bus Stopping Rate [/h] | 0 | 0 | 0 | 0 | 0 | 0 | 0 | 0 | 0 | 0 | 0 | 0 |
| Pedestrian Volume [ped/h] | 0 | | | 0 | | | 0 | | | 0 | | |
| Bicycle Volume [bicycles/h] | 0 | | | 0 | | | 0 | | | 0 | | |

**Intersection Settings**

| | |
|---|---|
| Located in CBD | No |
| Signal Coordination Group | 1 - NS - Sierra |
| Cycle Length [s] | 120 |
| Coordination Type | Time of Day Pattern Coordinated |
| Actuation Type | Fully actuated |
| Offset [s] | 0.0 |
| Offset Reference | LagFO |
| Permissive Mode | SingleBand |
| Lost time [s] | 16.00 |

**Phasing & Timing**

| Control Type | Protecte | Permiss | Overlap | Protecte | Permiss | Permiss | Protecte | Permiss | Permiss | Protecte | Permiss | Permiss |
|---|---|---|---|---|---|---|---|---|---|---|---|---|
| Signal group | 5 | 2 | 2 | 1 | 6 | 0 | 3 | 8 | 8 | 7 | 4 | 0 |
| Auxiliary Signal Groups | | | 2,7 | | | | | | | | | |
| Lead / Lag | Lead | - | - | Lead | - | - | Lead | - | - | Lead | - | - |
| Minimum Green [s] | 5 | 5 | 5 | 5 | 5 | 0 | 5 | 5 | 5 | 5 | 5 | 0 |
| Maximum Green [s] | 30 | 30 | 30 | 30 | 30 | 0 | 30 | 30 | 30 | 30 | 30 | 0 |
| Amber [s] | 4.1 | 4.1 | 4.1 | 4.1 | 4.1 | 0.0 | 4.1 | 4.1 | 4.1 | 3.7 | 3.7 | 0.0 |
| All red [s] | 1.0 | 1.0 | 1.0 | 1.0 | 1.0 | 0.0 | 1.0 | 1.0 | 1.0 | 1.0 | 1.0 | 0.0 |
| Split [s] | 11 | 48 | 48 | 11 | 48 | 0 | 17 | 42 | 42 | 19 | 44 | 0 |
| Vehicle Extension [s] | 3.0 | 3.0 | 3.0 | 3.0 | 3.0 | 0.0 | 3.0 | 3.0 | 3.0 | 3.0 | 3.0 | 0.0 |
| Walk [s] | 0 | 7 | 7 | 0 | 7 | 0 | 0 | 7 | 7 | 0 | 7 | 0 |
| Pedestrian Clearance [s] | 0 | 22 | 22 | 0 | 23 | 0 | 0 | 28 | 28 | 0 | 25 | 0 |
| I1, Start-Up Lost Time [s] | 2.0 | 2.0 | 2.0 | 2.0 | 2.0 | 0.0 | 2.0 | 2.0 | 2.0 | 2.0 | 2.0 | 0.0 |
| I2, Clearance Lost Time [s] | 3.1 | 3.1 | 3.1 | 3.1 | 3.1 | 0.0 | 3.1 | 3.1 | 3.1 | 2.7 | 2.7 | 0.0 |
| Minimum Recall | No | No | No | No | No | | No | No | | No | No | |
| Maximum Recall | No | No | No | No | No | | No | No | | No | No | |
| Pedestrian Recall | No | No | No | No | No | | No | No | | No | No | |
| Detector Location [ft] | 0.0 | 0.0 | 0.0 | 0.0 | 0.0 | 0.0 | 0.0 | 0.0 | 0.0 | 0.0 | 0.0 | 0.0 |
| Detector Length [ft] | 0.0 | 0.0 | 0.0 | 0.0 | 0.0 | 0.0 | 0.0 | 0.0 | 0.0 | 0.0 | 0.0 | 0.0 |
| I, Upstream Filtering Factor | 1.00 | 1.00 | 1.00 | 1.00 | 1.00 | 1.00 | 1.00 | 1.00 | 1.00 | 1.00 | 1.00 | 1.00 |

**Exclusive Pedestrian Phase**

| | |
|---|---|
| Pedestrian Signal Group | 0 |
| Pedestrian Walk [s] | 0 |
| Pedestrian Clearance [s] | 0 |

**Lane Group Calculations**

| Lane Group | L | C | R | L | C | R | L | C | R | L | C | C |
|---|---|---|---|---|---|---|---|---|---|---|---|---|
| L, Total Lost Time per Cycle [s] | 5.10 | 5.10 | 4.70 | 5.10 | 5.10 | 5.10 | 5.10 | 5.10 | 5.10 | 4.70 | 4.70 | 4.70 |
| l1_p, Permitted Start-Up Lost Time [s] | 0.00 | 0.00 | 0.00 | 0.00 | 0.00 | 0.00 | 0.00 | 0.00 | 0.00 | 0.00 | 0.00 | 0.00 |
| l2, Clearance Lost Time [s] | 3.10 | 3.10 | 0.00 | 3.10 | 3.10 | 3.10 | 3.10 | 3.10 | 3.10 | 2.70 | 2.70 | 2.70 |
| g_i, Effective Green Time [s] | 6 | 67 | 86 | 5 | 66 | 66 | 8 | 14 | 14 | 14 | 20 | 20 |
| g / C, Green / Cycle | 0.05 | 0.56 | 0.72 | 0.04 | 0.55 | 0.55 | 0.07 | 0.12 | 0.12 | 0.12 | 0.17 | 0.17 |
| (v / s)_i Volume / Saturation Flow Rate | 0.05 | 0.21 | 0.07 | 0.03 | 0.38 | 0.06 | 0.05 | 0.09 | 0.08 | 0.12 | 0.09 | 0.09 |
| s, saturation flow rate [veh/h] | 1774 | 3547 | 1583 | 1774 | 3547 | 1583 | 1774 | 3547 | 1583 | 1774 | 1863 | 1801 |
| c, Capacity [veh/h] | 89 | 1974 | 1138 | 71 | 1938 | 865 | 120 | 417 | 186 | 212 | 316 | 305 |
| d1, Uniform Delay [s] | 55.86 | 8.04 | 0.72 | 56.30 | 10.81 | 7.66 | 55.15 | 51.63 | 50.73 | 52.68 | 45.26 | 45.29 |
| k, delay calibration | 0.21 | 0.50 | 0.50 | 0.11 | 0.50 | 0.50 | 0.11 | 0.11 | 0.11 | 0.36 | 0.11 | 0.11 |
| I, Upstream Filtering Factor | 1.00 | 1.00 | 1.00 | 1.00 | 1.00 | 1.00 | 1.00 | 1.00 | 1.00 | 1.00 | 1.00 | 1.00 |
| d2, Incremental Delay [s] | 46.88 | 0.56 | 0.17 | 15.60 | 2.10 | 0.24 | 11.06 | 3.67 | 4.06 | 46.74 | 1.23 | 1.30 |
| d3, Initial Queue Delay [s] | 0.00 | 0.00 | 0.00 | 0.00 | 0.00 | 0.00 | 0.00 | 0.00 | 0.00 | 0.00 | 0.00 | 0.00 |
| Rp, platoon ratio | 1.33 | 1.33 | 1.33 | 1.33 | 1.33 | 1.33 | 1.00 | 1.00 | 1.00 | 1.00 | 1.00 | 1.00 |
| PF, progression factor | 1.00 | 1.00 | 1.00 | 1.00 | 1.00 | 1.00 | 1.00 | 1.00 | 1.00 | 1.00 | 1.00 | 1.00 |

**Lane Group Results**

| | | | | | | | | | | | | |
|---|---|---|---|---|---|---|---|---|---|---|---|---|
| X, volume / capacity | 0.94 | 0.38 | 0.10 | 0.76 | 0.70 | 0.10 | 0.79 | 0.80 | 0.67 | 0.98 | 0.50 | 0.51 |
| d, Delay for Lane Group [s/veh] | 102.74 | 8.60 | 0.89 | 71.90 | 12.91 | 7.89 | 66.22 | 55.30 | 54.79 | 99.42 | 46.49 | 46.58 |
| Lane Group LOS | F | A | A | E | B | A | E | E | D | F | D | D |
| Critical Lane Group | Yes | No | No | No | Yes | No | No | Yes | No | Yes | No | No |
| 50th-Percentile Queue Length [veh] | 3.60 | 3.04 | 0.16 | 1.89 | 7.24 | 0.71 | 3.18 | 5.08 | 3.75 | 8.96 | 4.41 | 4.30 |
| 50th-Percentile Queue Length [ft] | 89.91 | 75.98 | 3.88 | 47.35 | 181.04 | 17.71 | 79.45 | 127.03 | 93.78 | 224.00 | 110.22 | 107.51 |
| 95th-Percentile Queue Length [veh] | 6.47 | 5.47 | 0.28 | 3.41 | 11.65 | 1.28 | 5.72 | 8.78 | 6.75 | 13.87 | 7.85 | 7.70 |
| 95th-Percentile Queue Length [ft] | 161.85 | 136.76 | 6.99 | 85.23 | 291.37 | 31.88 | 143.02 | 219.44 | 168.81 | 346.73 | 196.30 | 192.54 |

**Movement, Approach, & Intersection Results**

| | | | | | | | | | | | | |
|---|---|---|---|---|---|---|---|---|---|---|---|---|
| d_M, Delay for Movement [s/veh] | 102.74 | 8.60 | 0.89 | 71.90 | 12.91 | 7.89 | 66.22 | 55.30 | 54.79 | 99.42 | 46.53 | 46.58 |
| Movement LOS | F | A | A | E | B | A | E | E | D | F | D | D |
| d_A, Approach Delay [s/veh] | 15.99 | | | 14.75 | | | 57.06 | | | 67.59 | | |
| Approach LOS | B | | | B | | | E | | | E | | |
| d_I, Intersection Delay [s/veh] | 29.60 | | | | | | | | | | | |
| Intersection LOS | C | | | | | | | | | | | |
| Intersection V/C | 0.737 | | | | | | | | | | | |

## Sequence

| | | | | | | | | | | | | | | | | |
|---|---|---|---|---|---|---|---|---|---|---|---|---|---|---|---|---|
| Ring 1 | 1 | 2 | 3 | 4 | - | - | - | - | - | - | - | - | - | - | - | - |
| Ring 2 | 5 | 6 | 7 | 8 | - | - | - | - | - | - | - | - | - | - | - | - |
| Ring 3 | - | - | - | - | - | - | - | - | - | - | - | - | - | - | - | - |
| Ring 4 | - | - | - | - | - | - | - | - | - | - | - | - | - | - | - | - |

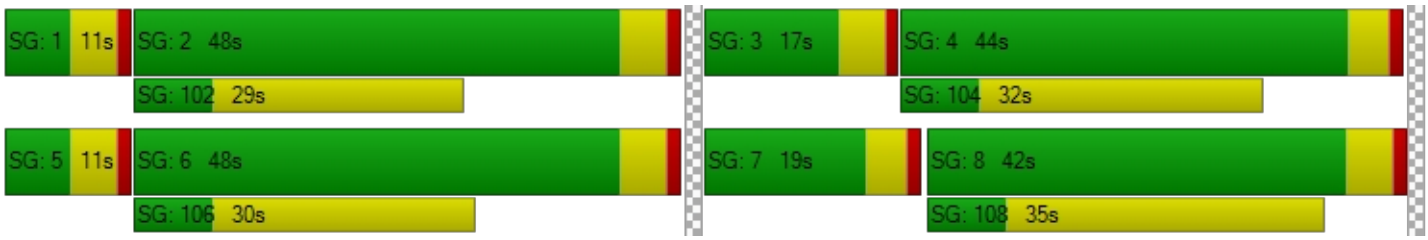

**Intersection Level Of Service Report**
**Intersection 2: Sierra Ave (NS) / Valley Blvd (EW)**

| | | | |
|---|---|---|---|
| Control Type: | Signalized | Delay (sec / veh): | 26.7 |
| Analysis Method: | HCM 2010 | Level Of Service: | C |
| Analysis Period: | 15 minutes | Volume to Capacity (v/c): | 0.842 |

**Intersection Setup**

| Name | Sierra Avenue | | | Sierra Avenue | | | Valley Boulevard | | | Valley Boulevard | | |
|---|---|---|---|---|---|---|---|---|---|---|---|---|
| Approach | Northbound | | | Southbound | | | Eastbound | | | Westbound | | |
| Lane Configuration | | | | | | | | | | 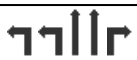 | | |
| Turning Movement | Left | Thru | Right | Left | Thru | Right | Left | Thru | Right | Left | Thru | Right |
| Lane Width [ft] | 12.00 | 12.00 | 12.00 | 12.00 | 12.00 | 12.00 | 12.00 | 12.00 | 12.00 | 12.00 | 12.00 | 12.00 |
| No. of Lanes in Pocket | 2 | 0 | 0 | 2 | 0 | 0 | 2 | 0 | 0 | 2 | 0 | 0 |
| Pocket Length [ft] | 370.00 | 100.00 | 100.00 | 165.00 | 100.00 | 100.00 | 260.00 | 100.00 | 100.00 | 355.00 | 100.00 | 100.00 |
| Speed [mph] | 35.00 | | | 35.00 | | | 40.00 | | | 40.00 | | |
| Grade [%] | 0.00 | | | 0.00 | | | 0.00 | | | 0.00 | | |
| Crosswalk | Yes | | | Yes | | | Yes | | | Yes | | |

**volumes**

| Name | Sierra Avenue | | | Sierra Avenue | | | Valley Boulevard | | | Valley Boulevard | | |
|---|---|---|---|---|---|---|---|---|---|---|---|---|
| Base Volume Input [veh/h] | 210 | 1156 | 854 | 70 | 1616 | 124 | 111 | 234 | 304 | 494 | 326 | 90 |
| Base Volume Adjustment Factor | 1.0000 | 1.0000 | 1.0000 | 1.0000 | 1.0000 | 1.0000 | 1.0000 | 1.0000 | 1.0000 | 1.0000 | 1.0000 | 1.0000 |
| Heavy Vehicles Percentage [%] | 2.00 | 2.00 | 2.00 | 2.00 | 2.00 | 2.00 | 4.00 | 4.00 | 4.00 | 4.00 | 4.00 | 4.00 |
| Growth Rate | 1.00 | 1.00 | 1.00 | 1.00 | 1.00 | 1.00 | 1.00 | 1.00 | 1.00 | 1.00 | 1.00 | 1.00 |
| In-Process Volume [veh/h] | 0 | 0 | 0 | 0 | 0 | 0 | 0 | 0 | 0 | 0 | 0 | 0 |
| Site-Generated Trips [veh/h] | 0 | 0 | 0 | 0 | 0 | 0 | 0 | 0 | 0 | 0 | 0 | 0 |
| Diverted Trips [veh/h] | 0 | 0 | 0 | 0 | 0 | 0 | 0 | 0 | 0 | 0 | 0 | 0 |
| Pass-by Trips [veh/h] | 0 | 0 | 0 | 0 | 0 | 0 | 0 | 0 | 0 | 0 | 0 | 0 |
| Existing Site Adjustment Volume [veh/h] | 0 | 0 | 0 | 0 | 0 | 0 | 0 | 0 | 0 | 0 | 0 | 0 |
| Other Volume [veh/h] | 0 | 0 | 0 | 0 | 0 | 0 | 0 | 0 | 0 | 0 | 0 | 0 |
| Right-Turn on Red Volume [veh/h] | 0 | 0 | 0 | 0 | 0 | 0 | 0 | 0 | 0 | 0 | 0 | 0 |
| Total Hourly Volume [veh/h] | 210 | 1156 | 854 | 70 | 1616 | 124 | 111 | 234 | 304 | 494 | 326 | 90 |
| Peak Hour Factor | 0.9720 | 0.9720 | 0.9720 | 0.9720 | 0.9720 | 0.9720 | 0.9720 | 0.9720 | 0.9720 | 0.9720 | 0.9720 | 0.9720 |
| Other Adjustment Factor | 1.0000 | 1.0000 | 1.0000 | 1.0000 | 1.0000 | 1.0000 | 1.0000 | 1.0000 | 1.0000 | 1.0000 | 1.0000 | 1.0000 |
| Total 15-Minute Volume [veh/h] | 54 | 297 | 220 | 18 | 416 | 32 | 29 | 60 | 78 | 127 | 84 | 23 |
| Total Analysis Volume [veh/h] | 216 | 1189 | 879 | 72 | 1663 | 128 | 114 | 241 | 313 | 508 | 335 | 93 |
| Presence of On-Street Parking | No | | No | No | | No | No | | No | No | | No |
| On-Street Parking Maneuver Rate [/h] | 0 | 0 | 0 | 0 | 0 | 0 | 0 | 0 | 0 | 0 | 0 | 0 |
| Local Bus Stopping Rate [/h] | 0 | 0 | 0 | 0 | 0 | 0 | 0 | 0 | 0 | 0 | 0 | 0 |
| Pedestrian Volume [ped/h] | 0 | | | 0 | | | 0 | | | 0 | | |
| Bicycle Volume [bicycles/h] | 0 | | | 0 | | | 0 | | | 0 | | |

**Intersection Settings**

| | |
|---|---|
| Located in CBD | No |
| Signal Coordination Group | 1 - NS - Sierra |
| Cycle Length [s] | 120 |
| Coordination Type | Time of Day Pattern Coordinated |
| Actuation Type | Fully actuated |
| Offset [s] | 59.0 |
| Offset Reference | LagFO |
| Permissive Mode | SingleBand |
| Lost time [s] | 16.00 |

**Phasing & Timing**

| Control Type | Protecte | Permiss | Overlap | Protecte | Permiss | Permiss | Protecte | Permiss | Overlap | Protecte | Permiss | Overlap |
|---|---|---|---|---|---|---|---|---|---|---|---|---|
| Signal group | 5 | 2 | 2 | 1 | 6 | 6 | 3 | 8 | 8 | 7 | 4 | 4 |
| Auxiliary Signal Groups | | | 2,7 | | | 3,6 | | | 5,8 | | | 1,4 |
| Lead / Lag | Lead | - | - | Lead | - | - | Lead | - | - | Lead | - | - |
| Minimum Green [s] | 5 | 5 | 5 | 5 | 5 | 5 | 5 | 5 | 5 | 5 | 5 | 5 |
| Maximum Green [s] | 30 | 30 | 30 | 30 | 30 | 30 | 30 | 30 | 30 | 30 | 30 | 30 |
| Amber [s] | 4.1 | 4.1 | 4.1 | 4.1 | 4.1 | 4.1 | 4.4 | 4.4 | 4.4 | 4.4 | 4.4 | 4.4 |
| All red [s] | 1.0 | 1.0 | 1.0 | 1.0 | 1.0 | 1.0 | 1.0 | 1.0 | 1.0 | 1.0 | 1.0 | 1.0 |
| Split [s] | 14 | 62 | 62 | 11 | 59 | 59 | 13 | 21 | 21 | 26 | 34 | 34 |
| Vehicle Extension [s] | 3.0 | 3.0 | 3.0 | 3.0 | 3.0 | 3.0 | 3.0 | 3.0 | 3.0 | 3.0 | 3.0 | 3.0 |
| Walk [s] | 0 | 7 | 7 | 0 | 7 | 7 | 0 | 5 | 5 | 0 | 5 | 5 |
| Pedestrian Clearance [s] | 0 | 24 | 24 | 0 | 26 | 26 | 0 | 10 | 10 | 0 | 10 | 10 |
| I1, Start-Up Lost Time [s] | 2.0 | 2.0 | 2.0 | 2.0 | 2.0 | 2.0 | 2.0 | 2.0 | 2.0 | 2.0 | 2.0 | 2.0 |
| I2, Clearance Lost Time [s] | 3.1 | 3.1 | 3.1 | 3.1 | 3.1 | 3.1 | 3.4 | 3.4 | 3.4 | 3.4 | 3.4 | 3.4 |
| Minimum Recall | No | No | No | No | No | | No | No | No | No | No | No |
| Maximum Recall | No | No | No | No | No | | No | No | No | No | No | No |
| Pedestrian Recall | No | No | No | No | No | | No | No | No | No | No | No |
| Detector Location [ft] | 0.0 | 0.0 | 0.0 | 0.0 | 0.0 | 0.0 | 0.0 | 0.0 | 0.0 | 0.0 | 0.0 | 0.0 |
| Detector Length [ft] | 0.0 | 0.0 | 0.0 | 0.0 | 0.0 | 0.0 | 0.0 | 0.0 | 0.0 | 0.0 | 0.0 | 0.0 |
| I, Upstream Filtering Factor | 1.00 | 1.00 | 1.00 | 1.00 | 1.00 | 1.00 | 1.00 | 1.00 | 1.00 | 1.00 | 1.00 | 1.00 |

**Exclusive Pedestrian Phase**

| | |
|---|---|
| Pedestrian Signal Group | 0 |
| Pedestrian Walk [s] | 0 |
| Pedestrian Clearance [s] | 0 |

**Lane Group Calculations**

| Lane Group | L | C | R | L | C | C | L | C | R | L | C | R |
|---|---|---|---|---|---|---|---|---|---|---|---|---|
| L, Total Lost Time per Cycle [s] | 5.10 | 5.10 | 5.40 | 5.10 | 5.10 | 5.10 | 5.40 | 5.40 | 5.10 | 5.40 | 5.40 | 5.10 |
| l1_p, Permitted Start-Up Lost Time [s] | 0.00 | 0.00 | 0.00 | 0.00 | 0.00 | 0.00 | 0.00 | 0.00 | 0.00 | 0.00 | 0.00 | 0.00 |
| l2, Clearance Lost Time [s] | 3.10 | 3.10 | 0.00 | 3.10 | 3.10 | 3.10 | 3.40 | 3.40 | 0.00 | 3.40 | 3.40 | 0.00 |
| g_i, Effective Green Time [s] | 9 | 61 | 87 | 6 | 58 | 58 | 6 | 12 | 26 | 20 | 26 | 37 |
| g / C, Green / Cycle | 0.07 | 0.51 | 0.72 | 0.05 | 0.49 | 0.49 | 0.05 | 0.10 | 0.22 | 0.17 | 0.21 | 0.31 |
| (v / s)_i Volume / Saturation Flow Rate | 0.06 | 0.23 | 0.56 | 0.02 | 0.33 | 0.34 | 0.03 | 0.05 | 0.20 | 0.15 | 0.10 | 0.06 |
| s, saturation flow rate [veh/h] | 3445 | 5074 | 1583 | 3445 | 3547 | 1795 | 3379 | 4977 | 1553 | 3379 | 3478 | 1553 |
| c, Capacity [veh/h] | 260 | 2589 | 1142 | 175 | 1722 | 872 | 170 | 476 | 335 | 570 | 745 | 481 |
| d1, Uniform Delay [s] | 53.29 | 11.50 | 0.83 | 54.31 | 15.43 | 15.45 | 55.08 | 49.77 | 41.93 | 45.50 | 37.13 | 25.70 |
| k, delay calibration | 0.11 | 0.50 | 0.50 | 0.11 | 0.50 | 0.50 | 0.11 | 0.11 | 0.50 | 0.11 | 0.11 | 0.34 |
| I, Upstream Filtering Factor | 1.00 | 1.00 | 1.00 | 1.00 | 1.00 | 1.00 | 1.00 | 1.00 | 1.00 | 1.00 | 1.00 | 1.00 |
| d2, Incremental Delay [s] | 6.76 | 0.59 | 5.02 | 1.56 | 2.29 | 4.49 | 4.53 | 0.83 | 34.73 | 5.07 | 0.43 | 0.61 |
| d3, Initial Queue Delay [s] | 0.00 | 0.00 | 0.00 | 0.00 | 0.00 | 0.00 | 0.00 | 0.00 | 0.00 | 0.00 | 0.00 | 0.00 |
| Rp, platoon ratio | 1.33 | 1.33 | 1.33 | 1.33 | 1.33 | 1.33 | 1.33 | 1.33 | 1.33 | 1.33 | 1.33 | 1.33 |
| PF, progression factor | 1.00 | 1.00 | 1.00 | 1.00 | 1.00 | 1.00 | 1.00 | 1.00 | 1.00 | 1.00 | 1.00 | 1.00 |

**Lane Group Results**

| | | | | | | | | | | | | |
|---|---|---|---|---|---|---|---|---|---|---|---|---|
| X, volume / capacity | 0.83 | 0.46 | 0.77 | 0.41 | 0.69 | 0.69 | 0.67 | 0.51 | 0.93 | 0.89 | 0.45 | 0.19 |
| d, Delay for Lane Group [s/veh] | 60.05 | 12.09 | 5.85 | 55.86 | 17.72 | 19.94 | 59.62 | 50.61 | 76.66 | 50.57 | 37.56 | 26.32 |
| Lane Group LOS | E | B | A | E | B | B | E | D | E | D | D | C |
| Critical Lane Group | No | No | Yes | Yes | No | No | No | No | Yes | Yes | No | No |
| 50th-Percentile Queue Length [veh] | 3.35 | 4.16 | 2.38 | 1.07 | 8.69 | 9.37 | 1.75 | 2.22 | 11.31 | 7.21 | 3.86 | 1.72 |
| 50th-Percentile Queue Length [ft] | 83.75 | 104.09 | 59.58 | 26.74 | 217.23 | 234.31 | 43.75 | 55.43 | 282.81 | 180.15 | 96.46 | 43.10 |
| 95th-Percentile Queue Length [veh] | 6.03 | 7.49 | 4.29 | 1.93 | 13.52 | 14.39 | 3.15 | 3.99 | 16.83 | 11.61 | 6.95 | 3.10 |
| 95th-Percentile Queue Length [ft] | 150.74 | 187.37 | 107.24 | 48.14 | 338.09 | 359.83 | 78.75 | 99.78 | 420.70 | 290.21 | 173.63 | 77.57 |

**Movement, Approach, & Intersection Results**

| | | | | | | | | | | | | |
|---|---|---|---|---|---|---|---|---|---|---|---|---|
| d_M, Delay for Movement [s/veh] | 60.05 | 12.09 | 5.85 | 55.86 | 18.35 | 19.94 | 59.62 | 50.61 | 76.66 | 50.57 | 37.56 | 26.32 |
| Movement LOS | E | B | A | E | B | B | E | D | E | D | D | C |
| d_A, Approach Delay [s/veh] | 14.22 | | | 19.91 | | | 64.35 | | | 43.51 | | |
| Approach LOS | B | | | B | | | E | | | D | | |
| d_I, Intersection Delay [s/veh] | 26.65 | | | | | | | | | | | |
| Intersection LOS | C | | | | | | | | | | | |
| Intersection V/C | 0.842 | | | | | | | | | | | |

## Sequence

| | | | | | | | | | | | | | | | | |
|---|---|---|---|---|---|---|---|---|---|---|---|---|---|---|---|---|
| Ring 1 | 1 | 2 | 3 | 4 | - | - | - | - | - | - | - | - | - | - | - | - |
| Ring 2 | 5 | 6 | 7 | 8 | - | - | - | - | - | - | - | - | - | - | - | - |
| Ring 3 | - | - | - | - | - | - | - | - | - | - | - | - | - | - | - | - |
| Ring 4 | - | - | - | - | - | - | - | - | - | - | - | - | - | - | - | - |

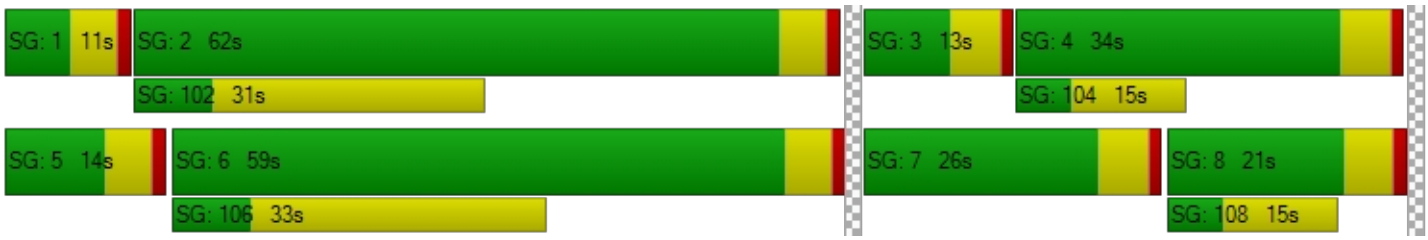

**Intersection Level Of Service Report**
**Intersection 4: Sierra Ave (NS) / Slover Ave (EW)**

| | | | |
|---|---|---|---|
| Control Type: | Signalized | Delay (sec / veh): | 28.8 |
| Analysis Method: | HCM 2010 | Level Of Service: | C |
| Analysis Period: | 15 minutes | Volume to Capacity (v/c): | 0.516 |

**Intersection Setup**

| Name | Sierra Avenue | | | Sierra Avenue | | | Slover Avenue | | | Slover Avenue | | |
|---|---|---|---|---|---|---|---|---|---|---|---|---|
| Approach | Northbound | | | Southbound | | | Eastbound | | | Westbound | | |
| Lane Configuration | | | | | | | | | | | | |
| Turning Movement | Left | Thru | Right | Left | Thru | Right | Left | Thru | Right | Left | Thru | Right |
| Lane Width [ft] | 12.00 | 12.00 | 12.00 | 12.00 | 12.00 | 12.00 | 12.00 | 12.00 | 12.00 | 12.00 | 12.00 | 12.00 |
| No. of Lanes in Pocket | 2 | 0 | 0 | 2 | 0 | 0 | 2 | 0 | 1 | 2 | 0 | 1 |
| Pocket Length [ft] | 195.00 | 100.00 | 100.00 | 615.00 | 100.00 | 100.00 | 290.00 | 100.00 | 290.00 | 230.00 | 100.00 | 300.00 |
| Speed [mph] | 50.00 | | | 40.00 | | | 45.00 | | | 45.00 | | |
| Grade [%] | 0.00 | | | 0.00 | | | 0.00 | | | 0.00 | | |
| Crosswalk | Yes | | | Yes | | | Yes | | | Yes | | |

**volumes**

| Name | Sierra Avenue | | | Sierra Avenue | | | Slover Avenue | | | Slover Avenue | | |
|---|---|---|---|---|---|---|---|---|---|---|---|---|
| Base Volume Input [veh/h] | 160 | 899 | 150 | 464 | 946 | 281 | 283 | 285 | 112 | 111 | 279 | 270 |
| Base Volume Adjustment Factor | 1.0000 | 1.0000 | 1.0000 | 1.0000 | 1.0000 | 1.0000 | 1.0000 | 1.0000 | 1.0000 | 1.0000 | 1.0000 | 1.0000 |
| Heavy Vehicles Percentage [%] | 2.00 | 2.00 | 2.00 | 2.00 | 2.00 | 2.00 | 2.00 | 2.00 | 2.00 | 2.00 | 2.00 | 2.00 |
| Growth Rate | 1.00 | 1.00 | 1.00 | 1.00 | 1.00 | 1.00 | 1.00 | 1.00 | 1.00 | 1.00 | 1.00 | 1.00 |
| In-Process Volume [veh/h] | 0 | 0 | 0 | 0 | 0 | 0 | 0 | 0 | 0 | 0 | 0 | 0 |
| Site-Generated Trips [veh/h] | 0 | 0 | 0 | 0 | 0 | 0 | 0 | 0 | 0 | 0 | 0 | 0 |
| Diverted Trips [veh/h] | 0 | 0 | 0 | 0 | 0 | 0 | 0 | 0 | 0 | 0 | 0 | 0 |
| Pass-by Trips [veh/h] | 0 | 0 | 0 | 0 | 0 | 0 | 0 | 0 | 0 | 0 | 0 | 0 |
| Existing Site Adjustment Volume [veh/h] | 0 | 0 | 0 | 0 | 0 | 0 | 0 | 0 | 0 | 0 | 0 | 0 |
| Other Volume [veh/h] | 0 | 0 | 0 | 0 | 0 | 0 | 0 | 0 | 0 | 0 | 0 | 0 |
| Right-Turn on Red Volume [veh/h] | 0 | 0 | 0 | 0 | 0 | 0 | 0 | 0 | 0 | 0 | 0 | 0 |
| Total Hourly Volume [veh/h] | 160 | 899 | 150 | 464 | 946 | 281 | 283 | 285 | 112 | 111 | 279 | 270 |
| Peak Hour Factor | 0.9580 | 0.9580 | 0.9580 | 0.9580 | 0.9580 | 0.9580 | 0.9580 | 0.9580 | 0.9580 | 0.9580 | 0.9580 | 0.9580 |
| Other Adjustment Factor | 1.0000 | 1.0000 | 1.0000 | 1.0000 | 1.0000 | 1.0000 | 1.0000 | 1.0000 | 1.0000 | 1.0000 | 1.0000 | 1.0000 |
| Total 15-Minute Volume [veh/h] | 42 | 235 | 39 | 121 | 247 | 73 | 74 | 74 | 29 | 29 | 73 | 70 |
| Total Analysis Volume [veh/h] | 167 | 938 | 157 | 484 | 987 | 293 | 295 | 297 | 117 | 116 | 291 | 282 |
| Presence of On-Street Parking | No | | No | No | | No | No | | No | No | | No |
| On-Street Parking Maneuver Rate [/h] | 0 | 0 | 0 | 0 | 0 | 0 | 0 | 0 | 0 | 0 | 0 | 0 |
| Local Bus Stopping Rate [/h] | 0 | 0 | 0 | 0 | 0 | 0 | 0 | 0 | 0 | 0 | 0 | 0 |
| Pedestrian Volume [ped/h] | 0 | | | 0 | | | 0 | | | 0 | | |
| Bicycle Volume [bicycles/h] | 0 | | | 0 | | | 0 | | | 0 | | |

**Intersection Settings**

| | |
|---|---|
| Located in CBD | No |
| Signal Coordination Group | 1 - NS - Sierra |
| Cycle Length [s] | 120 |
| Coordination Type | Time of Day Pattern Coordinated |
| Actuation Type | Fully actuated |
| Offset [s] | 12.0 |
| Offset Reference | LagFO |
| Permissive Mode | SingleBand |
| Lost time [s] | 16.00 |

**Phasing & Timing**

| Control Type | Protecte | Permiss | Overlap | Protecte | Permiss | Overlap | Protecte | Permiss | Overlap | Protecte | Permiss | Overlap |
|---|---|---|---|---|---|---|---|---|---|---|---|---|
| Signal group | 5 | 2 | 2 | 1 | 6 | 6 | 3 | 8 | 8 | 7 | 4 | 4 |
| Auxiliary Signal Groups | | | 2,7 | | | 3,6 | | | 5,8 | | | 1,4 |
| Lead / Lag | Lead | - | - | Lead | - | - | Lead | - | - | Lead | - | - |
| Minimum Green [s] | 5 | 5 | 5 | 5 | 5 | 5 | 5 | 5 | 5 | 5 | 5 | 5 |
| Maximum Green [s] | 30 | 30 | 30 | 30 | 30 | 30 | 30 | 30 | 30 | 30 | 30 | 30 |
| Amber [s] | 5.2 | 5.2 | 5.2 | 4.4 | 4.4 | 4.4 | 4.8 | 4.8 | 4.8 | 4.8 | 4.8 | 4.8 |
| All red [s] | 1.0 | 1.0 | 1.0 | 1.0 | 1.0 | 1.0 | 1.0 | 1.0 | 1.0 | 1.0 | 1.0 | 1.0 |
| Split [s] | 16 | 41 | 41 | 34 | 59 | 59 | 23 | 30 | 30 | 15 | 22 | 22 |
| Vehicle Extension [s] | 3.0 | 3.0 | 3.0 | 3.0 | 3.0 | 3.0 | 3.0 | 3.0 | 3.0 | 3.0 | 3.0 | 3.0 |
| Walk [s] | 0 | 7 | 7 | 0 | 7 | 7 | 0 | 5 | 5 | 0 | 5 | 5 |
| Pedestrian Clearance [s] | 0 | 22 | 22 | 0 | 20 | 20 | 0 | 10 | 10 | 0 | 10 | 10 |
| I1, Start-Up Lost Time [s] | 2.0 | 2.0 | 2.0 | 2.0 | 2.0 | 2.0 | 2.0 | 2.0 | 2.0 | 2.0 | 2.0 | 2.0 |
| I2, Clearance Lost Time [s] | 4.2 | 4.2 | 4.2 | 3.4 | 3.4 | 3.4 | 3.8 | 3.8 | 3.8 | 3.8 | 3.8 | 3.8 |
| Minimum Recall | No | No | No | No | No | No | No | No | No | No | No | No |
| Maximum Recall | No | No | No | No | No | No | No | No | No | No | No | No |
| Pedestrian Recall | No | No | No | No | No | No | No | No | No | No | No | No |
| Detector Location [ft] | 0.0 | 0.0 | 0.0 | 0.0 | 0.0 | 0.0 | 0.0 | 0.0 | 0.0 | 0.0 | 0.0 | 0.0 |
| Detector Length [ft] | 0.0 | 0.0 | 0.0 | 0.0 | 0.0 | 0.0 | 0.0 | 0.0 | 0.0 | 0.0 | 0.0 | 0.0 |
| I, Upstream Filtering Factor | 1.00 | 1.00 | 1.00 | 1.00 | 1.00 | 1.00 | 1.00 | 1.00 | 1.00 | 1.00 | 1.00 | 1.00 |

**Exclusive Pedestrian Phase**

| | |
|---|---|
| Pedestrian Signal Group | 0 |
| Pedestrian Walk [s] | 0 |
| Pedestrian Clearance [s] | 0 |

**Lane Group Calculations**

| Lane Group | L | C | R | L | C | R | L | C | R | L | C | R |
|---|---|---|---|---|---|---|---|---|---|---|---|---|
| L, Total Lost Time per Cycle [s] | 6.20 | 6.20 | 5.80 | 5.40 | 5.40 | 5.80 | 5.80 | 5.80 | 6.20 | 5.80 | 5.80 | 5.40 |
| l1_p, Permitted Start-Up Lost Time [s] | 0.00 | 0.00 | 0.00 | 0.00 | 0.00 | 0.00 | 0.00 | 0.00 | 0.00 | 0.00 | 0.00 | 0.00 |
| l2, Clearance Lost Time [s] | 4.20 | 4.20 | 0.00 | 3.40 | 3.40 | 0.00 | 3.80 | 3.80 | 0.00 | 3.80 | 3.80 | 0.00 |
| g_i, Effective Green Time [s] | 9 | 51 | 64 | 20 | 62 | 81 | 13 | 19 | 34 | 6 | 13 | 38 |
| g / C, Green / Cycle | 0.07 | 0.43 | 0.53 | 0.17 | 0.52 | 0.67 | 0.11 | 0.16 | 0.28 | 0.05 | 0.11 | 0.32 |
| (v / s)_i Volume / Saturation Flow Rate | 0.05 | 0.14 | 0.10 | 0.14 | 0.19 | 0.19 | 0.09 | 0.06 | 0.07 | 0.03 | 0.08 | 0.10 |
| s, saturation flow rate [veh/h] | 3445 | 6765 | 1583 | 3445 | 5074 | 1583 | 3445 | 5074 | 1583 | 3445 | 3547 | 2803 |
| c, Capacity [veh/h] | 254 | 2890 | 841 | 573 | 2637 | 1065 | 373 | 816 | 448 | 181 | 373 | 896 |
| d1, Uniform Delay [s] | 52.67 | 16.70 | 8.79 | 45.25 | 10.35 | 2.18 | 52.22 | 44.92 | 33.34 | 55.77 | 52.38 | 30.90 |
| k, delay calibration | 0.11 | 0.50 | 0.50 | 0.11 | 0.50 | 0.50 | 0.11 | 0.11 | 0.21 | 0.11 | 0.11 | 0.11 |
| I, Upstream Filtering Factor | 1.00 | 1.00 | 1.00 | 1.00 | 1.00 | 1.00 | 1.00 | 1.00 | 1.00 | 1.00 | 1.00 | 1.00 |
| d2, Incremental Delay [s] | 2.88 | 0.30 | 0.49 | 3.52 | 0.41 | 0.64 | 3.79 | 0.27 | 0.60 | 3.73 | 3.58 | 0.20 |
| d3, Initial Queue Delay [s] | 0.00 | 0.00 | 0.00 | 0.00 | 0.00 | 0.00 | 0.00 | 0.00 | 0.00 | 0.00 | 0.00 | 0.00 |
| Rp, platoon ratio | 1.33 | 1.33 | 1.33 | 1.33 | 1.33 | 1.33 | 1.00 | 1.00 | 1.00 | 1.00 | 1.00 | 1.00 |
| PF, progression factor | 1.00 | 1.00 | 1.00 | 1.00 | 1.00 | 1.00 | 1.00 | 1.00 | 1.00 | 1.00 | 1.00 | 1.00 |

**Lane Group Results**

| | | | | | | | | | | | | |
|---|---|---|---|---|---|---|---|---|---|---|---|---|
| X, volume / capacity | 0.66 | 0.32 | 0.19 | 0.84 | 0.37 | 0.28 | 0.79 | 0.36 | 0.26 | 0.64 | 0.78 | 0.31 |
| d, Delay for Lane Group [s/veh] | 55.55 | 17.00 | 9.28 | 48.76 | 10.76 | 2.82 | 56.01 | 45.19 | 33.95 | 59.51 | 55.96 | 31.10 |
| Lane Group LOS | E | B | A | D | B | A | E | D | C | E | E | C |
| Critical Lane Group | No | Yes | No | Yes | No | No | Yes | No | No | No | No | Yes |
| 50th-Percentile Queue Length [veh] | 2.41 | 3.07 | 1.35 | 6.68 | 3.14 | 0.93 | 4.42 | 2.59 | 2.65 | 1.78 | 4.35 | 3.02 |
| 50th-Percentile Queue Length [ft] | 60.35 | 76.67 | 33.66 | 167.12 | 78.40 | 23.14 | 110.48 | 64.70 | 66.17 | 44.43 | 108.77 | 75.59 |
| 95th-Percentile Queue Length [veh] | 4.35 | 5.52 | 2.42 | 10.93 | 5.64 | 1.67 | 7.87 | 4.66 | 4.76 | 3.20 | 7.77 | 5.44 |
| 95th-Percentile Queue Length [ft] | 108.63 | 138.00 | 60.58 | 273.13 | 141.12 | 41.65 | 196.68 | 116.46 | 119.10 | 79.97 | 194.28 | 136.06 |

**Movement, Approach, & Intersection Results**

| | | | | | | | | | | | | |
|---|---|---|---|---|---|---|---|---|---|---|---|---|
| d_M, Delay for Movement [s/veh] | 55.55 | 17.00 | 9.28 | 48.76 | 10.76 | 2.82 | 56.01 | 45.19 | 33.95 | 59.51 | 55.96 | 31.10 |
| Movement LOS | E | B | A | D | B | A | E | D | C | E | E | C |
| d_A, Approach Delay [s/veh] | 21.14 | | | 19.87 | | | 47.83 | | | 46.38 | | |
| Approach LOS | C | | | B | | | D | | | D | | |
| d_I, Intersection Delay [s/veh] | 28.84 | | | | | | | | | | | |
| Intersection LOS | C | | | | | | | | | | | |
| Intersection V/C | 0.516 | | | | | | | | | | | |

## Sequence

| | | | | | | | | | | | | | | | | |
|---|---|---|---|---|---|---|---|---|---|---|---|---|---|---|---|---|
| Ring 1 | 1 | 2 | 3 | 4 | - | - | - | - | - | - | - | - | - | - | - | - |
| Ring 2 | 5 | 6 | 7 | 8 | - | - | - | - | - | - | - | - | - | - | - | - |
| Ring 3 | - | - | - | - | - | - | - | - | - | - | - | - | - | - | - | - |
| Ring 4 | - | - | - | - | - | - | - | - | - | - | - | - | - | - | - | - |

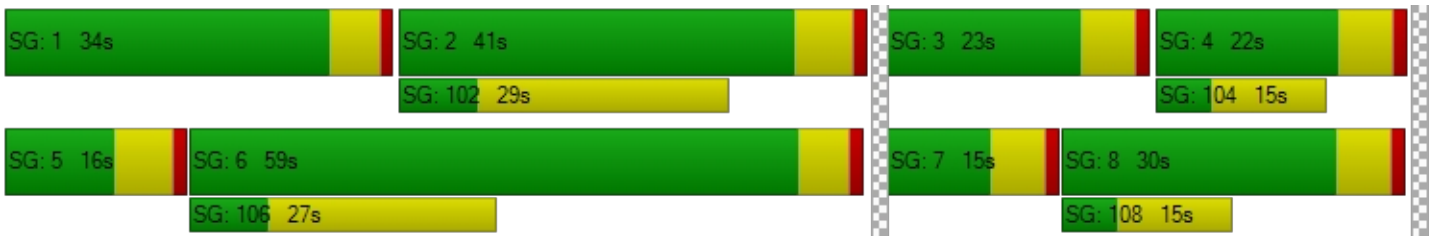

**Intersection Level Of Service Report**
**Intersection 7: Alder Ave (NS) / Marygold Ave (EW)**

| | | | |
|---|---|---|---|
| Control Type: | Signalized | Delay (sec / veh): | 11.0 |
| Analysis Method: | HCM 2010 | Level Of Service: | B |
| Analysis Period: | 15 minutes | Volume to Capacity (v/c): | 0.697 |

**Intersection Setup**

| Name | Alder Avenue | | | Alder Avenue | | | Marygold Avenue | | | Marygold Avenue | | |
|---|---|---|---|---|---|---|---|---|---|---|---|---|
| Approach | Northbound | | | Southbound | | | Eastbound | | | Westbound | | |
| Lane Configuration | | | | | | | | | | | | |
| Turning Movement | Left | Thru | Right | Left | Thru | Right | Left | Thru | Right | Left | Thru | Right |
| Lane Width [ft] | 12.00 | 12.00 | 12.00 | 12.00 | 12.00 | 12.00 | 12.00 | 12.00 | 12.00 | 12.00 | 12.00 | 12.00 |
| No. of Lanes in Pocket | 0 | 0 | 1 | 0 | 0 | 0 | 0 | 0 | 0 | 0 | 0 | 0 |
| Pocket Length [ft] | 100.00 | 100.00 | 200.00 | 100.00 | 100.00 | 100.00 | 100.00 | 100.00 | 100.00 | 100.00 | 100.00 | 100.00 |
| Speed [mph] | 40.00 | | | 40.00 | | | 35.00 | | | 25.00 | | |
| Grade [%] | 0.00 | | | 0.00 | | | 0.00 | | | 0.00 | | |
| Crosswalk | Yes | | | Yes | | | Yes | | | Yes | | |

**volumes**

| Name | Alder Avenue | | | Alder Avenue | | | Marygold Avenue | | | Marygold Avenue | | |
|---|---|---|---|---|---|---|---|---|---|---|---|---|
| Base Volume Input [veh/h] | 18 | 326 | 20 | 17 | 621 | 192 | 60 | 17 | 33 | 40 | 30 | 5 |
| Base Volume Adjustment Factor | 1.0000 | 1.0000 | 1.0000 | 1.0000 | 1.0000 | 1.0000 | 1.0000 | 1.0000 | 1.0000 | 1.0000 | 1.0000 | 1.0000 |
| Heavy Vehicles Percentage [%] | 2.00 | 2.00 | 2.00 | 2.00 | 2.00 | 2.00 | 2.00 | 2.00 | 2.00 | 2.00 | 2.00 | 2.00 |
| Growth Rate | 1.00 | 1.00 | 1.00 | 1.00 | 1.00 | 1.00 | 1.00 | 1.00 | 1.00 | 1.00 | 1.00 | 1.00 |
| In-Process Volume [veh/h] | 0 | 0 | 0 | 0 | 0 | 0 | 0 | 0 | 0 | 0 | 0 | 0 |
| Site-Generated Trips [veh/h] | 0 | 0 | 0 | 0 | 0 | 0 | 0 | 0 | 0 | 0 | 0 | 0 |
| Diverted Trips [veh/h] | 0 | 0 | 0 | 0 | 0 | 0 | 0 | 0 | 0 | 0 | 0 | 0 |
| Pass-by Trips [veh/h] | 0 | 0 | 0 | 0 | 0 | 0 | 0 | 0 | 0 | 0 | 0 | 0 |
| Existing Site Adjustment Volume [veh/h] | 0 | 0 | 0 | 0 | 0 | 0 | 0 | 0 | 0 | 0 | 0 | 0 |
| Other Volume [veh/h] | 0 | 0 | 0 | 0 | 0 | 0 | 0 | 0 | 0 | 0 | 0 | 0 |
| Right-Turn on Red Volume [veh/h] | 0 | 0 | 0 | 0 | 0 | 0 | 0 | 0 | 0 | 0 | 0 | 0 |
| Total Hourly Volume [veh/h] | 18 | 326 | 20 | 17 | 621 | 192 | 60 | 17 | 33 | 40 | 30 | 5 |
| Peak Hour Factor | 0.9220 | 0.9220 | 0.9220 | 0.9220 | 0.9220 | 0.9220 | 0.9220 | 0.9220 | 0.9220 | 0.9220 | 0.9220 | 0.9220 |
| Other Adjustment Factor | 1.0000 | 1.0000 | 1.0000 | 1.0000 | 1.0000 | 1.0000 | 1.0000 | 1.0000 | 1.0000 | 1.0000 | 1.0000 | 1.0000 |
| Total 15-Minute Volume [veh/h] | 5 | 88 | 5 | 5 | 168 | 52 | 16 | 5 | 9 | 11 | 8 | 1 |
| Total Analysis Volume [veh/h] | 20 | 354 | 22 | 18 | 674 | 208 | 65 | 18 | 36 | 43 | 33 | 5 |
| Presence of On-Street Parking | No | | No | No | | No | No | | No | No | | No |
| On-Street Parking Maneuver Rate [/h] | 0 | 0 | 0 | 0 | 0 | 0 | 0 | 0 | 0 | 0 | 0 | 0 |
| Local Bus Stopping Rate [/h] | 0 | 0 | 0 | 0 | 0 | 0 | 0 | 0 | 0 | 0 | 0 | 0 |
| Pedestrian Volume [ped/h] | 0 | | | 0 | | | 0 | | | 0 | | |
| Bicycle Volume [bicycles/h] | 0 | | | 0 | | | 0 | | | 0 | | |

**Intersection Settings**

| | |
|---|---|
| Located in CBD | Yes |
| Signal Coordination Group | - |
| Cycle Length [s] | 100 |
| Coordination Type | Time of Day Pattern Isolated |
| Actuation Type | Fully actuated |
| Offset [s] | 0.0 |
| Offset Reference | LeadGreen |
| Permissive Mode | SingleBand |
| Lost time [s] | 8.00 |

**Phasing & Timing**

| Control Type | Permiss | Permiss | Permiss | Permiss | Permiss | Permiss | Permiss | Permiss | Permiss | Permiss | Permiss | Permiss |
|---|---|---|---|---|---|---|---|---|---|---|---|---|
| Signal group | 0 | 2 | 0 | 0 | 6 | 0 | 0 | 8 | 0 | 0 | 4 | 0 |
| Auxiliary Signal Groups | | | | | | | | | | | | |
| Lead / Lag | - | - | - | - | - | - | - | - | - | - | - | - |
| Minimum Green [s] | 0 | 5 | 0 | 0 | 5 | 0 | 0 | 5 | 0 | 0 | 5 | 0 |
| Maximum Green [s] | 0 | 30 | 0 | 0 | 30 | 0 | 0 | 30 | 0 | 0 | 30 | 0 |
| Amber [s] | 0.0 | 3.0 | 0.0 | 0.0 | 3.0 | 0.0 | 0.0 | 3.0 | 0.0 | 0.0 | 3.0 | 0.0 |
| All red [s] | 0.0 | 1.0 | 0.0 | 0.0 | 1.0 | 0.0 | 0.0 | 1.0 | 0.0 | 0.0 | 1.0 | 0.0 |
| Split [s] | 0 | 55 | 0 | 0 | 55 | 0 | 0 | 45 | 0 | 0 | 45 | 0 |
| Vehicle Extension [s] | 0.0 | 3.0 | 0.0 | 0.0 | 3.0 | 0.0 | 0.0 | 3.0 | 0.0 | 0.0 | 3.0 | 0.0 |
| Walk [s] | 0 | 5 | 0 | 0 | 5 | 0 | 0 | 5 | 0 | 0 | 5 | 0 |
| Pedestrian Clearance [s] | 0 | 10 | 0 | 0 | 10 | 0 | 0 | 10 | 0 | 0 | 10 | 0 |
| I1, Start-Up Lost Time [s] | 0.0 | 2.0 | 0.0 | 0.0 | 2.0 | 0.0 | 0.0 | 2.0 | 0.0 | 0.0 | 2.0 | 0.0 |
| I2, Clearance Lost Time [s] | 0.0 | 2.0 | 0.0 | 0.0 | 2.0 | 0.0 | 0.0 | 2.0 | 0.0 | 0.0 | 2.0 | 0.0 |
| Minimum Recall | | No | | | No | | | No | | | No | |
| Maximum Recall | | No | | | No | | | No | | | No | |
| Pedestrian Recall | | No | | | No | | | No | | | No | |
| Detector Location [ft] | 0.0 | 0.0 | 0.0 | 0.0 | 0.0 | 0.0 | 0.0 | 0.0 | 0.0 | 0.0 | 0.0 | 0.0 |
| Detector Length [ft] | 0.0 | 0.0 | 0.0 | 0.0 | 0.0 | 0.0 | 0.0 | 0.0 | 0.0 | 0.0 | 0.0 | 0.0 |
| I, Upstream Filtering Factor | 1.00 | 1.00 | 1.00 | 1.00 | 1.00 | 1.00 | 1.00 | 1.00 | 1.00 | 1.00 | 1.00 | 1.00 |

**Exclusive Pedestrian Phase**

| | |
|---|---|
| Pedestrian Signal Group | 0 |
| Pedestrian Walk [s] | 0 |
| Pedestrian Clearance [s] | 0 |

**Lane Group Calculations**

| Lane Group | L | C | L | C | C | C |
|---|---|---|---|---|---|---|
| L, Total Lost Time per Cycle [s] | 4.00 | 4.00 | 4.00 | 4.00 | 4.00 | 4.00 |
| l1_p, Permitted Start-Up Lost Time [s] | 2.00 | 0.00 | 2.00 | 0.00 | 2.00 | 2.00 |
| l2, Clearance Lost Time [s] | 2.00 | 2.00 | 2.00 | 2.00 | 2.00 | 2.00 |
| g_i, Effective Green Time [s] | 81 | 81 | 81 | 81 | 11 | 11 |
| g / C, Green / Cycle | 0.81 | 0.81 | 0.81 | 0.81 | 0.11 | 0.11 |
| (v / s)_i Volume / Saturation Flow Rate | 0.04 | 0.23 | 0.02 | 0.55 | 0.09 | 0.06 |
| s, saturation flow rate [veh/h] | 564 | 1659 | 902 | 1609 | 1279 | 1263 |
| c, Capacity [veh/h] | 389 | 1345 | 734 | 1305 | 196 | 193 |
| d1, Uniform Delay [s] | 9.97 | 2.32 | 3.61 | 3.97 | 43.65 | 42.01 |
| k, delay calibration | 0.50 | 0.50 | 0.50 | 0.50 | 0.11 | 0.11 |
| I, Upstream Filtering Factor | 1.00 | 1.00 | 1.00 | 1.00 | 1.00 | 1.00 |
| d2, Incremental Delay [s] | 0.25 | 0.52 | 0.06 | 2.82 | 3.03 | 1.44 |
| d3, Initial Queue Delay [s] | 0.00 | 0.00 | 0.00 | 0.00 | 0.00 | 0.00 |
| Rp, platoon ratio | 1.00 | 1.00 | 1.00 | 1.00 | 1.00 | 1.00 |
| PF, progression factor | 1.00 | 1.00 | 1.00 | 1.00 | 1.00 | 1.00 |

**Lane Group Results**

| | | | | | | |
|---|---|---|---|---|---|---|
| X, volume / capacity | 0.05 | 0.28 | 0.02 | 0.68 | 0.61 | 0.42 |
| d, Delay for Lane Group [s/veh] | 10.22 | 2.84 | 3.67 | 6.79 | 46.69 | 43.45 |
| Lane Group LOS | B | A | A | A | D | D |
| Critical Lane Group | No | No | No | Yes | Yes | No |
| 50th-Percentile Queue Length [veh] | 0.21 | 1.14 | 0.09 | 4.81 | 3.00 | 1.98 |
| 50th-Percentile Queue Length [ft] | 5.27 | 28.42 | 2.18 | 120.21 | 75.10 | 49.46 |
| 95th-Percentile Queue Length [veh] | 0.38 | 2.05 | 0.16 | 8.40 | 5.41 | 3.56 |
| 95th-Percentile Queue Length [ft] | 9.49 | 51.15 | 3.93 | 210.12 | 135.18 | 89.02 |

**Movement, Approach, & Intersection Results**

| | | | | | | | | | | | | |
|---|---|---|---|---|---|---|---|---|---|---|---|---|
| d_M, Delay for Movement [s/veh] | 10.22 | 2.84 | 2.84 | 3.67 | 6.79 | 6.79 | 46.69 | 46.69 | 46.69 | 43.45 | 43.45 | 43.45 |
| Movement LOS | B | A | A | A | A | A | D | D | D | D | D | D |
| d_A, Approach Delay [s/veh] | 3.21 | | | 6.73 | | | 46.69 | | | 43.45 | | |
| Approach LOS | A | | | A | | | D | | | D | | |
| d_I, Intersection Delay [s/veh] | 10.96 | | | | | | | | | | | |
| Intersection LOS | B | | | | | | | | | | | |
| Intersection V/C | 0.697 | | | | | | | | | | | |

## Sequence

| | | | | | | | | | | | | | | | | |
|---|---|---|---|---|---|---|---|---|---|---|---|---|---|---|---|---|
| Ring 1 | 2 | 4 | - | - | - | - | - | - | - | - | - | - | - | - | - | - |
| Ring 2 | 6 | 8 | - | - | - | - | - | - | - | - | - | - | - | - | - | - |
| Ring 3 | - | - | - | - | - | - | - | - | - | - | - | - | - | - | - | - |
| Ring 4 | - | - | - | - | - | - | - | - | - | - | - | - | - | - | - | - |

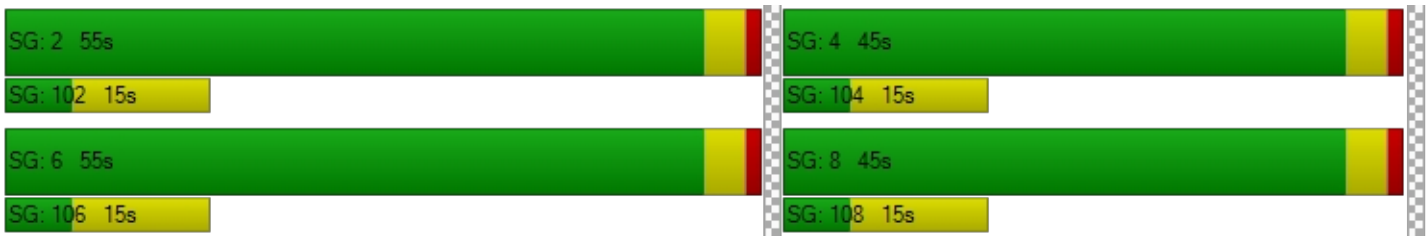

**Intersection Level Of Service Report**
**Intersection 8: Alder Ave (NS) / Valley Blvd (EW)**

| | | | |
|---|---|---|---|
| Control Type: | Signalized | Delay (sec / veh): | 34.2 |
| Analysis Method: | HCM 2010 | Level Of Service: | C |
| Analysis Period: | 15 minutes | Volume to Capacity (v/c): | 0.561 |

**Intersection Setup**

| Name | Alder Avenue | | | Alder Avenue | | | Valley Boulevard | | | | | |
|---|---|---|---|---|---|---|---|---|---|---|---|---|
| Approach | Northbound | | | Southbound | | | Eastbound | | | Westbound | | |
| Lane Configuration | | | | | | | | | | | | |
| Turning Movement | Left | Thru | Right | Left | Thru | Right | Left | Thru | Right | Left | Thru | Right |
| Lane Width [ft] | 12.00 | 12.00 | 12.00 | 12.00 | 12.00 | 12.00 | 12.00 | 12.00 | 12.00 | 12.00 | 12.00 | 12.00 |
| No. of Lanes in Pocket | 0 | 0 | 1 | 0 | 0 | 0 | 1 | 0 | 0 | 1 | 0 | 0 |
| Pocket Length [ft] | 100.00 | 100.00 | 55.00 | 100.00 | 100.00 | 100.00 | 100.00 | 100.00 | 100.00 | 100.00 | 100.00 | 100.00 |
| Speed [mph] | 40.00 | | | 40.00 | | | 40.00 | | | 30.00 | | |
| Grade [%] | 0.00 | | | 0.00 | | | 0.00 | | | 0.00 | | |
| Crosswalk | Yes | | | Yes | | | Yes | | | Yes | | |

**volumes**

| Name | Alder Avenue | | | Alder Avenue | | | Valley Boulevard | | | | | |
|---|---|---|---|---|---|---|---|---|---|---|---|---|
| Base Volume Input [veh/h] | 194 | 194 | 102 | 99 | 495 | 76 | 78 | 333 | 304 | 230 | 240 | 79 |
| Base Volume Adjustment Factor | 1.0000 | 1.0000 | 1.0000 | 1.0000 | 1.0000 | 1.0000 | 1.0000 | 1.0000 | 1.0000 | 1.0000 | 1.0000 | 1.0000 |
| Heavy Vehicles Percentage [%] | 2.00 | 2.00 | 2.00 | 2.00 | 2.00 | 2.00 | 4.00 | 4.00 | 4.00 | 4.00 | 4.00 | 4.00 |
| Growth Rate | 1.00 | 1.00 | 1.00 | 1.00 | 1.00 | 1.00 | 1.00 | 1.00 | 1.00 | 1.00 | 1.00 | 1.00 |
| In-Process Volume [veh/h] | 0 | 0 | 0 | 0 | 0 | 0 | 0 | 0 | 0 | 0 | 0 | 0 |
| Site-Generated Trips [veh/h] | 0 | 0 | 0 | 0 | 0 | 0 | 0 | 0 | 0 | 0 | 0 | 0 |
| Diverted Trips [veh/h] | 0 | 0 | 0 | 0 | 0 | 0 | 0 | 0 | 0 | 0 | 0 | 0 |
| Pass-by Trips [veh/h] | 0 | 0 | 0 | 0 | 0 | 0 | 0 | 0 | 0 | 0 | 0 | 0 |
| Existing Site Adjustment Volume [veh/h] | 0 | 0 | 0 | 0 | 0 | 0 | 0 | 0 | 0 | 0 | 0 | 0 |
| Other Volume [veh/h] | 0 | 0 | 0 | 0 | 0 | 0 | 0 | 0 | 0 | 0 | 0 | 0 |
| Right-Turn on Red Volume [veh/h] | 0 | 0 | 0 | 0 | 0 | 0 | 0 | 0 | 0 | 0 | 0 | 0 |
| Total Hourly Volume [veh/h] | 194 | 194 | 102 | 99 | 495 | 76 | 78 | 333 | 304 | 230 | 240 | 79 |
| Peak Hour Factor | 0.8890 | 0.8890 | 0.8890 | 0.8890 | 0.8890 | 0.8890 | 0.8890 | 0.8890 | 0.8890 | 0.8890 | 0.8890 | 0.8890 |
| Other Adjustment Factor | 1.0000 | 1.0000 | 1.0000 | 1.0000 | 1.0000 | 1.0000 | 1.0000 | 1.0000 | 1.0000 | 1.0000 | 1.0000 | 1.0000 |
| Total 15-Minute Volume [veh/h] | 55 | 55 | 29 | 28 | 139 | 21 | 22 | 94 | 85 | 65 | 67 | 22 |
| Total Analysis Volume [veh/h] | 218 | 218 | 115 | 111 | 557 | 85 | 88 | 375 | 342 | 259 | 270 | 89 |
| Presence of On-Street Parking | No | | No | No | | No | No | | No | No | | No |
| On-Street Parking Maneuver Rate [/h] | 0 | 0 | 0 | 0 | 0 | 0 | 0 | 0 | 0 | 0 | 0 | 0 |
| Local Bus Stopping Rate [/h] | 0 | 0 | 0 | 0 | 0 | 0 | 0 | 0 | 0 | 0 | 0 | 0 |
| Pedestrian Volume [ped/h] | 0 | | | 0 | | | 0 | | | 0 | | |
| Bicycle Volume [bicycles/h] | 0 | | | 0 | | | 0 | | | 0 | | |

**Intersection Settings**

| | |
|---|---|
| Located in CBD | No |
| Signal Coordination Group | 3 - EW - Valley |
| Cycle Length [s] | 120 |
| Coordination Type | Time of Day Pattern Coordinated |
| Actuation Type | Fully actuated |
| Offset [s] | 44.0 |
| Offset Reference | LagFO |
| Permissive Mode | SingleBand |
| Lost time [s] | 16.00 |

**Phasing & Timing**

| Control Type | Protecte | Permiss | Overlap | Protecte | Permiss | Overlap | Protecte | Permiss | Overlap | Protecte | Permiss | Permiss |
|---|---|---|---|---|---|---|---|---|---|---|---|---|
| Signal group | 5 | 2 | 2 | 1 | 6 | 6 | 3 | 8 | 8 | 7 | 4 | 4 |
| Auxiliary Signal Groups | | | 2,7 | | | 3,6 | | | 5,8 | | | 1,4 |
| Lead / Lag | Lead | - | - | Lead | - | - | Lead | - | - | Lead | - | - |
| Minimum Green [s] | 5 | 5 | 5 | 5 | 5 | 5 | 5 | 5 | 5 | 5 | 5 | 5 |
| Maximum Green [s] | 30 | 30 | 30 | 30 | 30 | 30 | 30 | 30 | 30 | 30 | 30 | 30 |
| Amber [s] | 3.0 | 4.4 | 4.4 | 3.0 | 4.4 | 4.4 | 4.4 | 4.4 | 4.4 | 3.7 | 3.7 | 3.7 |
| All red [s] | 1.0 | 1.0 | 1.0 | 1.0 | 1.0 | 1.0 | 1.0 | 1.0 | 1.0 | 1.0 | 1.0 | 1.0 |
| Split [s] | 25 | 21 | 21 | 64 | 60 | 60 | 15 | 21 | 21 | 14 | 20 | 20 |
| Vehicle Extension [s] | 3.0 | 3.0 | 3.0 | 3.0 | 3.0 | 3.0 | 3.0 | 3.0 | 3.0 | 3.0 | 3.0 | 3.0 |
| Walk [s] | 0 | 5 | 5 | 0 | 5 | 5 | 0 | 5 | 5 | 0 | 5 | 5 |
| Pedestrian Clearance [s] | 0 | 10 | 10 | 0 | 10 | 10 | 0 | 10 | 10 | 0 | 10 | 10 |
| I1, Start-Up Lost Time [s] | 2.0 | 2.0 | 2.0 | 2.0 | 2.0 | 2.0 | 2.0 | 2.0 | 2.0 | 2.0 | 2.0 | 2.0 |
| I2, Clearance Lost Time [s] | 2.0 | 3.4 | 3.4 | 2.0 | 3.4 | 3.4 | 3.4 | 3.4 | 3.4 | 2.7 | 2.7 | 2.7 |
| Minimum Recall | No | No | No | No | No | No | No | No | No | No | No | |
| Maximum Recall | No | No | No | No | No | No | No | No | No | No | No | |
| Pedestrian Recall | No | No | No | No | No | No | No | No | No | No | No | |
| Detector Location [ft] | 0.0 | 0.0 | 0.0 | 0.0 | 0.0 | 0.0 | 0.0 | 0.0 | 0.0 | 0.0 | 0.0 | 0.0 |
| Detector Length [ft] | 0.0 | 0.0 | 0.0 | 0.0 | 0.0 | 0.0 | 0.0 | 0.0 | 0.0 | 0.0 | 0.0 | 0.0 |
| I, Upstream Filtering Factor | 1.00 | 1.00 | 1.00 | 1.00 | 1.00 | 1.00 | 1.00 | 1.00 | 1.00 | 1.00 | 1.00 | 1.00 |

**Exclusive Pedestrian Phase**

| | |
|---|---|
| Pedestrian Signal Group | 0 |
| Pedestrian Walk [s] | 0 |
| Pedestrian Clearance [s] | 0 |

**Lane Group Calculations**

| Lane Group | L | C | R | L | C | R | L | C | R | L | C | C |
|---|---|---|---|---|---|---|---|---|---|---|---|---|
| L, Total Lost Time per Cycle [s] | 4.00 | 5.40 | 4.70 | 4.00 | 5.40 | 5.40 | 5.40 | 5.40 | 4.00 | 4.70 | 4.70 | 4.70 |
| l1_p, Permitted Start-Up Lost Time [s] | 0.00 | 0.00 | 0.00 | 0.00 | 0.00 | 0.00 | 0.00 | 0.00 | 0.00 | 0.00 | 0.00 | 0.00 |
| l2, Clearance Lost Time [s] | 2.00 | 3.40 | 0.00 | 2.00 | 3.40 | 0.00 | 3.40 | 3.40 | 0.00 | 2.70 | 2.70 | 2.70 |
| g_i, Effective Green Time [s] | 11 | 23 | 41 | 9 | 22 | 35 | 7 | 56 | 72 | 12 | 61 | 61 |
| g / C, Green / Cycle | 0.09 | 0.19 | 0.34 | 0.08 | 0.18 | 0.29 | 0.06 | 0.47 | 0.60 | 0.10 | 0.50 | 0.50 |
| (v / s)_i Volume / Saturation Flow Rate | 0.06 | 0.06 | 0.07 | 0.06 | 0.16 | 0.05 | 0.03 | 0.11 | 0.22 | 0.08 | 0.10 | 0.10 |
| s, saturation flow rate [veh/h] | 3445 | 3547 | 1583 | 1774 | 3547 | 1583 | 3379 | 3478 | 1553 | 3379 | 1827 | 1675 |
| c, Capacity [veh/h] | 314 | 689 | 537 | 139 | 645 | 456 | 206 | 1617 | 933 | 337 | 920 | 844 |
| d1, Uniform Delay [s] | 52.94 | 41.51 | 28.27 | 54.37 | 47.67 | 32.17 | 53.14 | 13.30 | 5.50 | 50.69 | 10.55 | 10.56 |
| k, delay calibration | 0.11 | 0.11 | 0.11 | 0.11 | 0.11 | 0.11 | 0.11 | 0.50 | 0.50 | 0.11 | 0.50 | 0.50 |
| I, Upstream Filtering Factor | 1.00 | 1.00 | 1.00 | 1.00 | 1.00 | 1.00 | 1.00 | 1.00 | 1.00 | 1.00 | 1.00 | 1.00 |
| d2, Incremental Delay [s] | 2.77 | 0.26 | 0.20 | 9.89 | 3.61 | 0.20 | 1.40 | 0.34 | 1.11 | 3.69 | 0.50 | 0.55 |
| d3, Initial Queue Delay [s] | 0.00 | 0.00 | 0.00 | 0.00 | 0.00 | 0.00 | 0.00 | 0.00 | 0.00 | 0.00 | 0.00 | 0.00 |
| Rp, platoon ratio | 1.00 | 1.00 | 1.00 | 1.00 | 1.00 | 1.00 | 1.33 | 1.33 | 1.33 | 1.33 | 1.33 | 1.33 |
| PF, progression factor | 1.00 | 1.00 | 1.00 | 1.00 | 1.00 | 1.00 | 1.00 | 1.00 | 1.00 | 1.00 | 1.00 | 1.00 |

**Lane Group Results**

| | | | | | | | | | | | | |
|---|---|---|---|---|---|---|---|---|---|---|---|---|
| X, volume / capacity | 0.69 | 0.32 | 0.21 | 0.80 | 0.86 | 0.19 | 0.43 | 0.23 | 0.37 | 0.77 | 0.20 | 0.20 |
| d, Delay for Lane Group [s/veh] | 55.71 | 41.77 | 28.47 | 64.26 | 51.28 | 32.37 | 54.54 | 13.63 | 6.61 | 54.38 | 11.04 | 11.10 |
| Lane Group LOS | E | D | C | E | D | C | D | B | A | D | B | B |
| Critical Lane Group | Yes | No | No | No | Yes | No | No | No | Yes | Yes | No | No |
| 50th-Percentile Queue Length [veh] | 3.26 | 2.76 | 2.35 | 3.63 | 8.23 | 1.86 | 1.28 | 2.16 | 2.19 | 3.83 | 1.93 | 1.80 |
| 50th-Percentile Queue Length [ft] | 81.53 | 68.98 | 58.77 | 90.64 | 205.86 | 46.46 | 31.89 | 53.99 | 54.79 | 95.66 | 48.13 | 44.92 |
| 95th-Percentile Queue Length [veh] | 5.87 | 4.97 | 4.23 | 6.53 | 12.94 | 3.35 | 2.30 | 3.89 | 3.94 | 6.89 | 3.47 | 3.23 |
| 95th-Percentile Queue Length [ft] | 146.75 | 124.17 | 105.79 | 163.15 | 323.51 | 83.63 | 57.41 | 97.18 | 98.62 | 172.19 | 86.63 | 80.86 |

**Movement, Approach, & Intersection Results**

| | | | | | | | | | | | | |
|---|---|---|---|---|---|---|---|---|---|---|---|---|
| d_M, Delay for Movement [s/veh] | 55.71 | 41.77 | 28.47 | 64.26 | 51.28 | 32.37 | 54.54 | 13.63 | 6.61 | 54.38 | 11.06 | 11.10 |
| Movement LOS | E | D | C | E | D | C | D | B | A | D | B | B |
| d_A, Approach Delay [s/veh] | 44.51 | | | 51.06 | | | 15.12 | | | 29.22 | | |
| Approach LOS | D | | | D | | | B | | | C | | |
| d_I, Intersection Delay [s/veh] | 34.18 | | | | | | | | | | | |
| Intersection LOS | C | | | | | | | | | | | |
| Intersection V/C | 0.561 | | | | | | | | | | | |

## Sequence

| | | | | | | | | | | | | | | | | |
|---|---|---|---|---|---|---|---|---|---|---|---|---|---|---|---|---|
| Ring 1 | 1 | 2 | 3 | 4 | - | - | - | - | - | - | - | - | - | - | - | - |
| Ring 2 | 5 | 6 | 7 | 8 | - | - | - | - | - | - | - | - | - | - | - | - |
| Ring 3 | - | - | - | - | - | - | - | - | - | - | - | - | - | - | - | - |
| Ring 4 | - | - | - | - | - | - | - | - | - | - | - | - | - | - | - | - |

**Intersection Level Of Service Report**
**Intersection 9: Locust Ave (NS) / Marygold Ave (EW)**

| | | | |
|---|---|---|---|
| Control Type: | All-way stop | Delay (sec / veh): | 12.0 |
| Analysis Method: | HCM 2010 | Level Of Service: | B |
| Analysis Period: | 15 minutes | | |

**Intersection Setup**

| Name | Locust Avenue | | | Locust Avenue | | | Marygold Avenue | | | | | |
|---|---|---|---|---|---|---|---|---|---|---|---|---|
| Approach | Northbound | | | Southbound | | | Eastbound | | | Westbound | | |
| Lane Configuration | | | | | | | | | | | | |
| Turning Movement | Left | Thru | Right | Left | Thru | Right | Left | Thru | Right | Left | Thru | Right |
| Lane Width [ft] | 12.00 | 12.00 | 12.00 | 12.00 | 12.00 | 12.00 | 12.00 | 12.00 | 12.00 | 12.00 | 12.00 | 12.00 |
| No. of Lanes in Pocket | 0 | 0 | 1 | 0 | 0 | 1 | 0 | 0 | 0 | 0 | 0 | 0 |
| Pocket Length [ft] | 100.00 | 100.00 | 100.00 | 100.00 | 100.00 | 325.00 | 100.00 | 100.00 | 100.00 | 100.00 | 100.00 | 100.00 |
| Speed [mph] | 30.00 | | | 40.00 | | | 30.00 | | | 30.00 | | |
| Grade [%] | 0.00 | | | 0.00 | | | 0.00 | | | 0.00 | | |
| Crosswalk | Yes | | | Yes | | | Yes | | | Yes | | |

**volumes**

| Name | Locust Avenue | | | Locust Avenue | | | Marygold Avenue | | | | | |
|---|---|---|---|---|---|---|---|---|---|---|---|---|
| Base Volume Input [veh/h] | 29 | 131 | 29 | 30 | 303 | 28 | 6 | 51 | 71 | 52 | 73 | 13 |
| Base Volume Adjustment Factor | 1.0000 | 1.0000 | 1.0000 | 1.0000 | 1.0000 | 1.0000 | 1.0000 | 1.0000 | 1.0000 | 1.0000 | 1.0000 | 1.0000 |
| Heavy Vehicles Percentage [%] | 2.00 | 2.00 | 2.00 | 2.00 | 2.00 | 2.00 | 2.00 | 2.00 | 2.00 | 2.00 | 2.00 | 2.00 |
| Growth Rate | 1.00 | 1.00 | 1.00 | 1.00 | 1.00 | 1.00 | 1.00 | 1.00 | 1.00 | 1.00 | 1.00 | 1.00 |
| In-Process Volume [veh/h] | 0 | 0 | 0 | 0 | 0 | 0 | 0 | 0 | 0 | 0 | 0 | 0 |
| Site-Generated Trips [veh/h] | 0 | 0 | 0 | 0 | 0 | 0 | 0 | 0 | 0 | 0 | 0 | 0 |
| Diverted Trips [veh/h] | 0 | 0 | 0 | 0 | 0 | 0 | 0 | 0 | 0 | 0 | 0 | 0 |
| Pass-by Trips [veh/h] | 0 | 0 | 0 | 0 | 0 | 0 | 0 | 0 | 0 | 0 | 0 | 0 |
| Existing Site Adjustment Volume [veh/h] | 0 | 0 | 0 | 0 | 0 | 0 | 0 | 0 | 0 | 0 | 0 | 0 |
| Other Volume [veh/h] | 0 | 0 | 0 | 0 | 0 | 0 | 0 | 0 | 0 | 0 | 0 | 0 |
| Total Hourly Volume [veh/h] | 29 | 131 | 29 | 30 | 303 | 28 | 6 | 51 | 71 | 52 | 73 | 13 |
| Peak Hour Factor | 0.9500 | 0.9500 | 0.9500 | 0.9500 | 0.9500 | 0.9500 | 0.9500 | 0.9500 | 0.9500 | 0.9500 | 0.9500 | 0.9500 |
| Other Adjustment Factor | 1.0000 | 1.0000 | 1.0000 | 1.0000 | 1.0000 | 1.0000 | 1.0000 | 1.0000 | 1.0000 | 1.0000 | 1.0000 | 1.0000 |
| Total 15-Minute Volume [veh/h] | 8 | 34 | 8 | 8 | 80 | 7 | 2 | 13 | 19 | 14 | 19 | 3 |
| Total Analysis Volume [veh/h] | 31 | 138 | 31 | 32 | 319 | 29 | 6 | 54 | 75 | 55 | 77 | 14 |
| Pedestrian Volume [ped/h] | 0 | | | 0 | | | 0 | | | 0 | | |

**Intersection Settings**

**Lanes**

**Movement, Approach, & Intersection Results**

| | | | | | | |
|---|---|---|---|---|---|---|
| 95th-Percentile Queue Length [veh] | 0.59 | 0.55 | 3.38 | 0.12 | 0.75 | 0.89 |
| 95th-Percentile Queue Length [ft] | 14.87 | 13.78 | 84.58 | 3.09 | 18.83 | 22.24 |
| Approach Delay [s/veh] | 9.63 | | 14.58 | | 9.77 | 10.41 |
| Approach LOS | A | | B | | A | B |
| Intersection Delay [s/veh] | 11.97 | | | | | |
| Intersection LOS | B | | | | | |

**Intersection Level Of Service Report**
**Intersection 13: Cedar Ave (NS) / Valley Blvd (EW)**

| | | | |
|---|---|---|---|
| Control Type: | Signalized | Delay (sec / veh): | 28.2 |
| Analysis Method: | HCM 2010 | Level Of Service: | C |
| Analysis Period: | 15 minutes | Volume to Capacity (v/c): | 0.871 |

**Intersection Setup**

| Name | Cedar Avenue | | | Cedar Avenue | | | | | | Valley Boulevard | | |
|---|---|---|---|---|---|---|---|---|---|---|---|---|
| Approach | Northbound | | | Southbound | | | Eastbound | | | Westbound | | |
| Lane Configuration | | | | | | | | | | | | |
| Turning Movement | Left | Thru | Right | Left | Thru | Right | Left | Thru | Right | Left | Thru | Right |
| Lane Width [ft] | 12.00 | 12.00 | 12.00 | 12.00 | 12.00 | 12.00 | 12.00 | 12.00 | 12.00 | 12.00 | 12.00 | 12.00 |
| No. of Lanes in Pocket | 2 | 0 | 1 | 2 | 0 | 0 | 2 | 0 | 1 | 2 | 0 | 0 |
| Pocket Length [ft] | 235.00 | 100.00 | 100.00 | 155.00 | 100.00 | 100.00 | 300.00 | 100.00 | 300.00 | 375.00 | 100.00 | 100.00 |
| Speed [mph] | 40.00 | | | 40.00 | | | 30.00 | | | 40.00 | | |
| Grade [%] | 0.00 | | | 0.00 | | | 0.00 | | | 0.00 | | |
| Crosswalk | Yes | | | Yes | | | Yes | | | Yes | | |

**volumes**

| Name | Cedar Avenue | | | Cedar Avenue | | | | | | Valley Boulevard | | |
|---|---|---|---|---|---|---|---|---|---|---|---|---|
| Base Volume Input [veh/h] | 319 | 1200 | 261 | 92 | 1885 | 123 | 88 | 147 | 470 | 403 | 178 | 49 |
| Base Volume Adjustment Factor | 1.0000 | 1.0000 | 1.0000 | 1.0000 | 1.0000 | 1.0000 | 1.0000 | 1.0000 | 1.0000 | 1.0000 | 1.0000 | 1.0000 |
| Heavy Vehicles Percentage [%] | 5.00 | 5.00 | 5.00 | 4.00 | 4.00 | 4.00 | 4.00 | 4.00 | 4.00 | 4.00 | 4.00 | 4.00 |
| Growth Rate | 1.00 | 1.00 | 1.00 | 1.00 | 1.00 | 1.00 | 1.00 | 1.00 | 1.00 | 1.00 | 1.00 | 1.00 |
| In-Process Volume [veh/h] | 0 | 0 | 0 | 0 | 0 | 0 | 0 | 0 | 0 | 0 | 0 | 0 |
| Site-Generated Trips [veh/h] | 0 | 0 | 0 | 0 | 0 | 0 | 0 | 0 | 0 | 0 | 0 | 0 |
| Diverted Trips [veh/h] | 0 | 0 | 0 | 0 | 0 | 0 | 0 | 0 | 0 | 0 | 0 | 0 |
| Pass-by Trips [veh/h] | 0 | 0 | 0 | 0 | 0 | 0 | 0 | 0 | 0 | 0 | 0 | 0 |
| Existing Site Adjustment Volume [veh/h] | 0 | 0 | 0 | 0 | 0 | 0 | 0 | 0 | 0 | 0 | 0 | 0 |
| Other Volume [veh/h] | 0 | 0 | 0 | 0 | 0 | 0 | 0 | 0 | 0 | 0 | 0 | 0 |
| Right-Turn on Red Volume [veh/h] | 0 | 0 | 0 | 0 | 0 | 0 | 0 | 0 | 0 | 0 | 0 | 0 |
| Total Hourly Volume [veh/h] | 319 | 1200 | 261 | 92 | 1885 | 123 | 88 | 147 | 470 | 403 | 178 | 49 |
| Peak Hour Factor | 0.9760 | 0.9760 | 0.9760 | 0.9760 | 0.9760 | 0.9760 | 0.9760 | 0.9760 | 0.9760 | 0.9760 | 0.9760 | 0.9760 |
| Other Adjustment Factor | 1.0000 | 1.0000 | 1.0000 | 1.0000 | 1.0000 | 1.0000 | 1.0000 | 1.0000 | 1.0000 | 1.0000 | 1.0000 | 1.0000 |
| Total 15-Minute Volume [veh/h] | 82 | 307 | 67 | 24 | 483 | 32 | 23 | 38 | 120 | 103 | 46 | 13 |
| Total Analysis Volume [veh/h] | 327 | 1230 | 267 | 94 | 1931 | 126 | 90 | 151 | 482 | 413 | 182 | 50 |
| Presence of On-Street Parking | No | | No | No | | No | No | | No | No | | No |
| On-Street Parking Maneuver Rate [/h] | 0 | 0 | 0 | 0 | 0 | 0 | 0 | 0 | 0 | 0 | 0 | 0 |
| Local Bus Stopping Rate [/h] | 0 | 0 | 0 | 0 | 0 | 0 | 0 | 0 | 0 | 0 | 0 | 0 |
| Pedestrian Volume [ped/h] | 0 | | | 0 | | | 0 | | | 0 | | |
| Bicycle Volume [bicycles/h] | 0 | | | 0 | | | 0 | | | 0 | | |

**Intersection Settings**

| | |
|---|---|
| Located in CBD | No |
| Signal Coordination Group | 2 - NS - Cedar |
| Cycle Length [s] | 120 |
| Coordination Type | Time of Day Pattern Coordinated |
| Actuation Type | Fully actuated |
| Offset [s] | 50.0 |
| Offset Reference | LagFO |
| Permissive Mode | SingleBand |
| Lost time [s] | 16.00 |

**Phasing & Timing**

| Control Type | Protecte | Permiss | Overlap | Protecte | Permiss | Permiss | Protecte | Permiss | Overlap | Protecte | Permiss | Permiss |
|---|---|---|---|---|---|---|---|---|---|---|---|---|
| Signal group | 5 | 2 | 2 | 1 | 6 | 0 | 3 | 8 | 8 | 7 | 4 | 0 |
| Auxiliary Signal Groups | | | 2,7 | | | | | | 5,8 | | | |
| Lead / Lag | Lead | - | - | Lead | - | - | Lead | - | - | Lead | - | - |
| Minimum Green [s] | 5 | 5 | 5 | 5 | 5 | 0 | 5 | 5 | 5 | 5 | 5 | 0 |
| Maximum Green [s] | 30 | 30 | 30 | 30 | 30 | 0 | 30 | 30 | 30 | 30 | 30 | 0 |
| Amber [s] | 4.4 | 4.4 | 4.4 | 4.4 | 4.4 | 0.0 | 3.7 | 3.7 | 3.7 | 4.4 | 4.4 | 0.0 |
| All red [s] | 1.0 | 1.0 | 1.0 | 1.0 | 1.0 | 0.0 | 1.0 | 1.0 | 1.0 | 1.0 | 1.0 | 0.0 |
| Split [s] | 18 | 68 | 68 | 11 | 61 | 0 | 10 | 20 | 20 | 21 | 31 | 0 |
| Vehicle Extension [s] | 3.0 | 3.0 | 3.0 | 3.0 | 3.0 | 0.0 | 3.0 | 3.0 | 3.0 | 3.0 | 3.0 | 0.0 |
| Walk [s] | 0 | 7 | 7 | 0 | 7 | 0 | 0 | 5 | 5 | 0 | 5 | 0 |
| Pedestrian Clearance [s] | 0 | 28 | 28 | 0 | 27 | 0 | 0 | 10 | 10 | 0 | 10 | 0 |
| I1, Start-Up Lost Time [s] | 2.0 | 2.0 | 2.0 | 2.0 | 2.0 | 0.0 | 2.0 | 2.0 | 2.0 | 2.0 | 2.0 | 0.0 |
| I2, Clearance Lost Time [s] | 3.4 | 3.4 | 3.4 | 3.4 | 3.4 | 0.0 | 2.7 | 2.7 | 2.7 | 3.4 | 3.4 | 0.0 |
| Minimum Recall | No | No | No | No | No | | No | No | No | No | No | |
| Maximum Recall | No | No | No | No | No | | No | No | No | No | No | |
| Pedestrian Recall | No | No | No | No | No | | No | No | No | No | No | |
| Detector Location [ft] | 0.0 | 0.0 | 0.0 | 0.0 | 0.0 | 0.0 | 0.0 | 0.0 | 0.0 | 0.0 | 0.0 | 0.0 |
| Detector Length [ft] | 0.0 | 0.0 | 0.0 | 0.0 | 0.0 | 0.0 | 0.0 | 0.0 | 0.0 | 0.0 | 0.0 | 0.0 |
| I, Upstream Filtering Factor | 1.00 | 1.00 | 1.00 | 1.00 | 1.00 | 1.00 | 1.00 | 1.00 | 1.00 | 1.00 | 1.00 | 1.00 |

**Exclusive Pedestrian Phase**

| | |
|---|---|
| Pedestrian Signal Group | 0 |
| Pedestrian Walk [s] | 0 |
| Pedestrian Clearance [s] | 0 |

**Lane Group Calculations**

| Lane Group | L | C | R | L | C | C | L | C | R | L | C | C |
|---|---|---|---|---|---|---|---|---|---|---|---|---|
| L, Total Lost Time per Cycle [s] | 5.40 | 5.40 | 5.40 | 5.40 | 5.40 | 5.40 | 4.70 | 4.70 | 5.40 | 5.40 | 5.40 | 5.40 |
| l1_p, Permitted Start-Up Lost Time [s] | 0.00 | 0.00 | 0.00 | 0.00 | 0.00 | 0.00 | 0.00 | 0.00 | 0.00 | 0.00 | 0.00 | 0.00 |
| l2, Clearance Lost Time [s] | 3.40 | 3.40 | 0.00 | 3.40 | 3.40 | 3.40 | 2.70 | 2.70 | 0.00 | 3.40 | 3.40 | 3.40 |
| g_i, Effective Green Time [s] | 13 | 66 | 87 | 5 | 59 | 59 | 5 | 12 | 30 | 16 | 23 | 23 |
| g / C, Green / Cycle | 0.11 | 0.55 | 0.73 | 0.04 | 0.49 | 0.49 | 0.04 | 0.10 | 0.25 | 0.13 | 0.19 | 0.19 |
| (v / s)_i Volume / Saturation Flow Rate | 0.10 | 0.25 | 0.17 | 0.03 | 0.39 | 0.39 | 0.03 | 0.08 | 0.18 | 0.12 | 0.07 | 0.07 |
| s, saturation flow rate [veh/h] | 3347 | 4929 | 1538 | 3379 | 3478 | 1770 | 3379 | 1827 | 2749 | 3379 | 1827 | 1694 |
| c, Capacity [veh/h] | 355 | 2707 | 1115 | 147 | 1693 | 862 | 143 | 187 | 681 | 442 | 349 | 324 |
| d1, Uniform Delay [s] | 51.10 | 8.86 | 0.57 | 55.67 | 16.86 | 16.95 | 55.79 | 50.71 | 36.45 | 49.10 | 38.62 | 38.64 |
| k, delay calibration | 0.11 | 0.50 | 0.50 | 0.11 | 0.50 | 0.50 | 0.11 | 0.15 | 0.23 | 0.11 | 0.11 | 0.11 |
| I, Upstream Filtering Factor | 1.00 | 1.00 | 1.00 | 1.00 | 1.00 | 1.00 | 1.00 | 1.00 | 1.00 | 1.00 | 1.00 | 1.00 |
| d2, Incremental Delay [s] | 10.06 | 0.55 | 0.51 | 4.55 | 4.14 | 8.08 | 4.55 | 10.94 | 2.92 | 9.52 | 0.58 | 0.64 |
| d3, Initial Queue Delay [s] | 0.00 | 0.00 | 0.00 | 0.00 | 0.00 | 0.00 | 0.00 | 0.00 | 0.00 | 0.00 | 0.00 | 0.00 |
| Rp, platoon ratio | 1.33 | 1.33 | 1.33 | 1.33 | 1.33 | 1.33 | 1.33 | 1.33 | 1.33 | 1.33 | 1.33 | 1.33 |
| PF, progression factor | 1.00 | 1.00 | 1.00 | 1.00 | 1.00 | 1.00 | 1.00 | 1.00 | 1.00 | 1.00 | 1.00 | 1.00 |

**Lane Group Results**

| | | | | | | | | | | | | |
|---|---|---|---|---|---|---|---|---|---|---|---|---|
| X, volume / capacity | 0.92 | 0.45 | 0.24 | 0.64 | 0.80 | 0.81 | 0.63 | 0.81 | 0.71 | 0.93 | 0.34 | 0.35 |
| d, Delay for Lane Group [s/veh] | 61.16 | 9.41 | 1.08 | 60.21 | 21.01 | 25.03 | 60.34 | 61.65 | 39.36 | 58.62 | 39.20 | 39.27 |
| Lane Group LOS | E | A | A | E | C | C | E | E | D | E | D | D |
| Critical Lane Group | Yes | No | No | No | No | Yes | No | No | Yes | Yes | No | No |
| 50th-Percentile Queue Length [veh] | 5.09 | 3.47 | 0.35 | 1.45 | 11.25 | 12.55 | 1.42 | 4.84 | 6.09 | 6.28 | 2.83 | 2.65 |
| 50th-Percentile Queue Length [ft] | 127.23 | 86.67 | 8.68 | 36.35 | 281.24 | 313.66 | 35.38 | 120.90 | 152.24 | 157.12 | 70.82 | 66.35 |
| 95th-Percentile Queue Length [veh] | 8.79 | 6.24 | 0.63 | 2.62 | 16.75 | 18.36 | 2.55 | 8.44 | 10.14 | 10.40 | 5.10 | 4.78 |
| 95th-Percentile Queue Length [ft] | 219.72 | 156.01 | 15.63 | 65.43 | 418.75 | 458.89 | 63.68 | 211.07 | 253.42 | 259.91 | 127.48 | 119.42 |

**Movement, Approach, & Intersection Results**

| | | | | | | | | | | | | |
|---|---|---|---|---|---|---|---|---|---|---|---|---|
| d_M, Delay for Movement [s/veh] | 61.16 | 9.41 | 1.08 | 60.21 | 22.20 | 25.03 | 60.34 | 61.65 | 39.36 | 58.62 | 39.22 | 39.27 |
| Movement LOS | E | A | A | E | C | C | E | E | D | E | D | D |
| d_A, Approach Delay [s/veh] | 17.47 | | | 24.02 | | | 46.63 | | | 51.65 | | |
| Approach LOS | B | | | C | | | D | | | D | | |
| d_I, Intersection Delay [s/veh] | 28.18 | | | | | | | | | | | |
| Intersection LOS | C | | | | | | | | | | | |
| Intersection V/C | 0.871 | | | | | | | | | | | |

## Sequence

| | | | | | | | | | | | | | | | | |
|---|---|---|---|---|---|---|---|---|---|---|---|---|---|---|---|---|
| Ring 1 | 1 | 2 | 3 | 4 | - | - | - | - | - | - | - | - | - | - | - | - |
| Ring 2 | 5 | 6 | 7 | 8 | - | - | - | - | - | - | - | - | - | - | - | - |
| Ring 3 | - | - | - | - | - | - | - | - | - | - | - | - | - | - | - | - |
| Ring 4 | - | - | - | - | - | - | - | - | - | - | - | - | - | - | - | - |

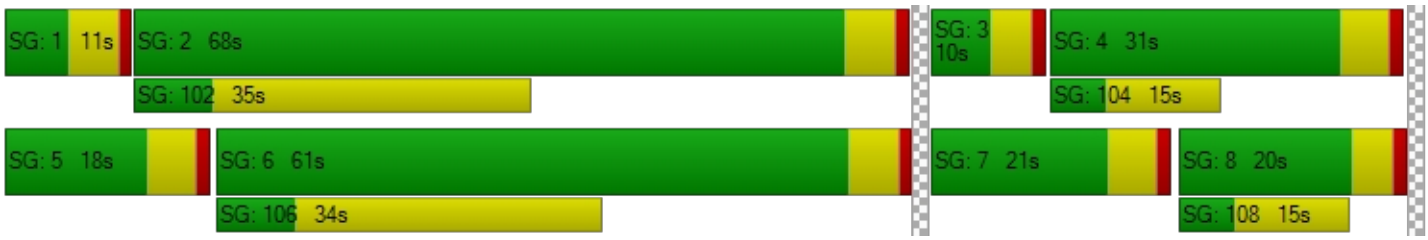

**Intersection Level Of Service Report**
**Intersection 14: Cedar Ave (NS) / I-10 Westbound Ramps (EW)**

| | | | |
|---|---|---|---|
| Control Type: | Signalized | Delay (sec / veh): | 39.9 |
| Analysis Method: | HCM 2010 | Level Of Service: | D |
| Analysis Period: | 15 minutes | Volume to Capacity (v/c): | 1.061 |

**Intersection Setup**

| Name | Cedar Avenue | | | Cedar Avenue | | | | | | I-10 Westbound Ramps | | |
|---|---|---|---|---|---|---|---|---|---|---|---|---|
| Approach | Northbound | | | Southbound | | | Eastbound | | | Westbound | | |
| Lane Configuration | | | | | | | | | | | | |
| Turning Movement | Left | Thru | Right | Left | Thru | Right | Left | Thru | Right | Left | Thru | Right |
| Lane Width [ft] | 12.00 | 12.00 | 12.00 | 12.00 | 12.00 | 12.00 | 12.00 | 12.00 | 12.00 | 12.00 | 12.00 | 12.00 |
| No. of Lanes in Pocket | 1 | 0 | 0 | 0 | 0 | 1 | 0 | 0 | 0 | 0 | 0 | 1 |
| Pocket Length [ft] | 305.00 | 100.00 | 100.00 | 100.00 | 100.00 | 100.00 | 100.00 | 100.00 | 100.00 | 100.00 | 100.00 | 485.00 |
| Speed [mph] | 40.00 | | | 40.00 | | | 30.00 | | | 30.00 | | |
| Grade [%] | 0.00 | | | 0.00 | | | 0.00 | | | 0.00 | | |
| Crosswalk | No | | | No | | | Yes | | | Yes | | |

**volumes**

| Name | Cedar Avenue | | | Cedar Avenue | | | | | | I-10 Westbound Ramps | | |
|---|---|---|---|---|---|---|---|---|---|---|---|---|
| Base Volume Input [veh/h] | 368 | 1252 | 0 | 0 | 1600 | 1150 | 0 | 0 | 0 | 368 | 1 | 511 |
| Base Volume Adjustment Factor | 1.0000 | 1.0000 | 1.0000 | 1.0000 | 1.0000 | 1.0000 | 1.0000 | 1.0000 | 1.0000 | 1.0000 | 1.0000 | 1.0000 |
| Heavy Vehicles Percentage [%] | 5.00 | 5.00 | 2.00 | 2.00 | 5.00 | 5.00 | 2.00 | 2.00 | 2.00 | 6.00 | 6.00 | 6.00 |
| Growth Rate | 1.00 | 1.00 | 1.00 | 1.00 | 1.00 | 1.00 | 1.00 | 1.00 | 1.00 | 1.00 | 1.00 | 1.00 |
| In-Process Volume [veh/h] | 0 | 0 | 0 | 0 | 0 | 0 | 0 | 0 | 0 | 0 | 0 | 0 |
| Site-Generated Trips [veh/h] | 0 | 0 | 0 | 0 | 0 | 0 | 0 | 0 | 0 | 0 | 0 | 0 |
| Diverted Trips [veh/h] | 0 | 0 | 0 | 0 | 0 | 0 | 0 | 0 | 0 | 0 | 0 | 0 |
| Pass-by Trips [veh/h] | 0 | 0 | 0 | 0 | 0 | 0 | 0 | 0 | 0 | 0 | 0 | 0 |
| Existing Site Adjustment Volume [veh/h] | 0 | 0 | 0 | 0 | 0 | 0 | 0 | 0 | 0 | 0 | 0 | 0 |
| Other Volume [veh/h] | 0 | 0 | 0 | 0 | 0 | 0 | 0 | 0 | 0 | 0 | 0 | 0 |
| Right-Turn on Red Volume [veh/h] | 0 | 0 | 0 | 0 | 0 | 0 | 0 | 0 | 0 | 0 | 0 | 0 |
| Total Hourly Volume [veh/h] | 368 | 1252 | 0 | 0 | 1600 | 1150 | 0 | 0 | 0 | 368 | 1 | 511 |
| Peak Hour Factor | 0.9350 | 0.9350 | 1.0000 | 1.0000 | 0.9350 | 0.9350 | 1.0000 | 1.0000 | 1.0000 | 0.9350 | 0.9350 | 0.9350 |
| Other Adjustment Factor | 1.0000 | 1.0000 | 1.0000 | 1.0000 | 1.0000 | 1.0000 | 1.0000 | 1.0000 | 1.0000 | 1.0000 | 1.0000 | 1.0000 |
| Total 15-Minute Volume [veh/h] | 98 | 335 | 0 | 0 | 428 | 307 | 0 | 0 | 0 | 98 | 0 | 137 |
| Total Analysis Volume [veh/h] | 394 | 1339 | 0 | 0 | 1711 | 1230 | 0 | 0 | 0 | 394 | 1 | 547 |
| Presence of On-Street Parking | No | | No | No | | No | | | | No | | No |
| On-Street Parking Maneuver Rate [/h] | 0 | 0 | 0 | 0 | 0 | 0 | 0 | 0 | 0 | 0 | 0 | 0 |
| Local Bus Stopping Rate [/h] | 0 | 0 | 0 | 0 | 0 | 0 | 0 | 0 | 0 | 0 | 0 | 0 |
| Pedestrian Volume [ped/h] | 0 | | | 0 | | | 0 | | | 0 | | |
| Bicycle Volume [bicycles/h] | 0 | | | 0 | | | 0 | | | 0 | | |

**Intersection Settings**

| | |
|---|---|
| Located in CBD | No |
| Signal Coordination Group | 2 - NS - Cedar |
| Cycle Length [s] | 120 |
| Coordination Type | Time of Day Pattern Coordinated |
| Actuation Type | Fully actuated |
| Offset [s] | 59.0 |
| Offset Reference | LagFO |
| Permissive Mode | SingleBand |
| Lost time [s] | 12.00 |

**Phasing & Timing**

| Control Type | Protecte | Permiss | Permiss | Permiss | Permiss | Overlap | Permiss | Permiss | Permiss | Permiss | Permiss | Permiss |
|---|---|---|---|---|---|---|---|---|---|---|---|---|
| Signal group | 5 | 2 | 0 | 0 | 6 | 6 | 0 | 0 | 0 | 0 | 4 | 0 |
| Auxiliary Signal Groups | | | | | | 4,6 | | | | | | |
| Lead / Lag | Lead | - | - | - | - | - | - | - | - | - | - | - |
| Minimum Green [s] | 5 | 5 | 0 | 0 | 5 | 5 | 0 | 0 | 0 | 0 | 5 | 0 |
| Maximum Green [s] | 30 | 30 | 0 | 0 | 30 | 30 | 0 | 0 | 0 | 0 | 30 | 0 |
| Amber [s] | 4.4 | 4.4 | 0.0 | 0.0 | 4.4 | 4.4 | 0.0 | 0.0 | 0.0 | 0.0 | 3.7 | 0.0 |
| All red [s] | 1.0 | 1.0 | 0.0 | 0.0 | 1.0 | 1.0 | 0.0 | 0.0 | 0.0 | 0.0 | 1.0 | 0.0 |
| Split [s] | 20 | 77 | 0 | 0 | 57 | 57 | 0 | 0 | 0 | 0 | 43 | 0 |
| Vehicle Extension [s] | 3.0 | 3.0 | 0.0 | 0.0 | 3.0 | 3.0 | 0.0 | 0.0 | 0.0 | 0.0 | 3.0 | 0.0 |
| Walk [s] | 0 | 7 | 0 | 0 | 7 | 7 | 0 | 0 | 0 | 0 | 7 | 0 |
| Pedestrian Clearance [s] | 0 | 17 | 0 | 0 | 17 | 17 | 0 | 0 | 0 | 0 | 10 | 0 |
| I1, Start-Up Lost Time [s] | 2.0 | 2.0 | 0.0 | 0.0 | 2.0 | 2.0 | 0.0 | 0.0 | 0.0 | 0.0 | 2.0 | 0.0 |
| I2, Clearance Lost Time [s] | 3.4 | 3.4 | 0.0 | 0.0 | 3.4 | 3.4 | 0.0 | 0.0 | 0.0 | 0.0 | 2.7 | 0.0 |
| Minimum Recall | No | No | | | No | No | | | | | No | |
| Maximum Recall | No | No | | | No | No | | | | | No | |
| Pedestrian Recall | No | No | | | No | No | | | | | No | |
| Detector Location [ft] | 0.0 | 0.0 | 0.0 | 0.0 | 0.0 | 0.0 | 0.0 | 0.0 | 0.0 | 0.0 | 0.0 | 0.0 |
| Detector Length [ft] | 0.0 | 0.0 | 0.0 | 0.0 | 0.0 | 0.0 | 0.0 | 0.0 | 0.0 | 0.0 | 0.0 | 0.0 |
| I, Upstream Filtering Factor | 1.00 | 1.00 | 1.00 | 1.00 | 1.00 | 1.00 | 1.00 | 1.00 | 1.00 | 1.00 | 1.00 | 1.00 |

**Exclusive Pedestrian Phase**

| | |
|---|---|
| Pedestrian Signal Group | 0 |
| Pedestrian Walk [s] | 0 |
| Pedestrian Clearance [s] | 0 |

**Lane Group Calculations**

| Lane Group | L | C | C | R | | C | R |
|---|---|---|---|---|---|---|---|
| L, Total Lost Time per Cycle [s] | 5.40 | 5.40 | 5.40 | 4.70 | | 4.70 | 4.70 |
| l1_p, Permitted Start-Up Lost Time [s] | 0.00 | 0.00 | 0.00 | 0.00 | | 2.00 | 0.00 |
| l2, Clearance Lost Time [s] | 3.40 | 3.40 | 3.40 | 0.00 | | 2.70 | 2.70 |
| g_i, Effective Green Time [s] | 15 | 72 | 52 | 95 | | 38 | 38 |
| g / C, Green / Cycle | 0.12 | 0.60 | 0.43 | 0.79 | | 0.32 | 0.32 |
| (v / s)_i Volume / Saturation Flow Rate | 0.12 | 0.27 | 0.35 | 0.80 | | 0.36 | 0.31 |
| s, saturation flow rate [veh/h] | 3347 | 4929 | 4929 | 1538 | | 1308 | 1524 |
| c, Capacity [veh/h] | 409 | 2941 | 2117 | 1221 | | 472 | 486 |
| d1, Uniform Delay [s] | 52.38 | 13.39 | 29.89 | 12.38 | | 43.99 | 40.14 |
| k, delay calibration | 0.11 | 0.50 | 0.50 | 0.50 | | 0.50 | 0.42 |
| I, Upstream Filtering Factor | 1.00 | 1.00 | 1.00 | 1.00 | | 1.00 | 1.00 |
| d2, Incremental Delay [s] | 13.68 | 0.51 | 3.44 | 27.64 | | 42.29 | 29.29 |
| d3, Initial Queue Delay [s] | 0.00 | 0.00 | 0.00 | 0.00 | | 0.00 | 0.00 |
| Rp, platoon ratio | 1.00 | 1.00 | 1.00 | 1.00 | | 1.00 | 1.00 |
| PF, progression factor | 1.00 | 1.00 | 1.00 | 1.00 | | 1.00 | 1.00 |

**Lane Group Results**

| | | | | | | | |
|---|---|---|---|---|---|---|---|
| X, volume / capacity | 0.96 | 0.46 | 0.81 | 1.01 | | 1.00 | 0.96 |
| d, Delay for Lane Group [s/veh] | 66.06 | 13.90 | 33.34 | 40.02 | | 86.28 | 69.43 |
| Lane Group LOS | E | B | C | F | | F | E |
| Critical Lane Group | Yes | No | No | Yes | | Yes | No |
| 50th-Percentile Queue Length [veh] | 6.57 | 6.33 | 14.36 | 30.26 | | 19.93 | 17.33 |
| 50th-Percentile Queue Length [ft] | 164.14 | 158.24 | 359.00 | 756.41 | | 498.18 | 433.35 |
| 95th-Percentile Queue Length [veh] | 10.77 | 10.46 | 20.57 | 39.57 | | 27.31 | 24.16 |
| 95th-Percentile Queue Length [ft] | 269.19 | 261.39 | 514.37 | 989.15 | | 682.83 | 604.05 |

**Movement, Approach, & Intersection Results**

| | | | | | | | | | | | | |
|---|---|---|---|---|---|---|---|---|---|---|---|---|
| d_M, Delay for Movement [s/veh] | 66.06 | 13.90 | 0.00 | 0.00 | 33.34 | 40.02 | 0.00 | 0.00 | 0.00 | 86.28 | 86.28 | 71.80 |
| Movement LOS | E | B | | | C | F | | | | F | F | E |
| d_A, Approach Delay [s/veh] | 25.76 | | | 36.13 | | | 0.00 | | | 77.91 | | |
| Approach LOS | C | | | D | | | A | | | E | | |
| d_I, Intersection Delay [s/veh] | 39.94 | | | | | | | | | | | |
| Intersection LOS | D | | | | | | | | | | | |
| Intersection V/C | 1.061 | | | | | | | | | | | |

## Sequence

| | | | | | | | | | | | | | | | | |
|---|---|---|---|---|---|---|---|---|---|---|---|---|---|---|---|---|
| Ring 1 | - | 2 | 4 | - | - | - | - | - | - | - | - | - | - | - | - | - |
| Ring 2 | 5 | 6 | - | - | - | - | - | - | - | - | - | - | - | - | - | - |
| Ring 3 | - | - | - | - | - | - | - | - | - | - | - | - | - | - | - | - |
| Ring 4 | - | - | - | - | - | - | - | - | - | - | - | - | - | - | - | - |

**Intersection Level Of Service Report**
**Intersection 15: Cedar Ave (NS) / I-10 Eastbound Ramps (EW)**

| | | | |
|---|---|---|---|
| Control Type: | Signalized | Delay (sec / veh): | 40.9 |
| Analysis Method: | HCM 2010 | Level Of Service: | D |
| Analysis Period: | 15 minutes | Volume to Capacity (v/c): | 0.884 |

**Intersection Setup**

| Name | Cedar Avenue | | | Cedar Avenue | | | | | | I-10 Eastbound Ramps | | |
|---|---|---|---|---|---|---|---|---|---|---|---|---|
| Approach | Northbound | | | Southbound | | | Eastbound | | | Westbound | | |
| Lane Configuration | | | | | | | | | | | | |
| Turning Movement | Left | Thru | Right | Left | Thru | Right | Left | Thru | Right | Left | Thru | Right |
| Lane Width [ft] | 12.00 | 12.00 | 12.00 | 12.00 | 12.00 | 12.00 | 12.00 | 12.00 | 12.00 | 12.00 | 12.00 | 12.00 |
| No. of Lanes in Pocket | 0 | 0 | 1 | 1 | 0 | 0 | 1 | 0 | 0 | 0 | 0 | 0 |
| Pocket Length [ft] | 100.00 | 100.00 | 555.00 | 305.00 | 100.00 | 100.00 | 340.00 | 100.00 | 100.00 | 100.00 | 100.00 | 100.00 |
| Speed [mph] | 40.00 | | | 40.00 | | | 30.00 | | | 30.00 | | |
| Grade [%] | 0.00 | | | 0.00 | | | 0.00 | | | 0.00 | | |
| Crosswalk | No | | | No | | | Yes | | | Yes | | |

**volumes**

| Name | Cedar Avenue | | | Cedar Avenue | | | | | | I-10 Eastbound Ramps | | |
|---|---|---|---|---|---|---|---|---|---|---|---|---|
| Base Volume Input [veh/h] | 0 | 1018 | 372 | 604 | 1366 | 0 | 616 | 3 | 361 | 0 | 0 | 0 |
| Base Volume Adjustment Factor | 1.0000 | 1.0000 | 1.0000 | 1.0000 | 1.0000 | 1.0000 | 1.0000 | 1.0000 | 1.0000 | 1.0000 | 1.0000 | 1.0000 |
| Heavy Vehicles Percentage [%] | 2.00 | 5.00 | 5.00 | 5.00 | 5.00 | 2.00 | 6.00 | 6.00 | 6.00 | 2.00 | 2.00 | 2.00 |
| Growth Rate | 1.00 | 1.00 | 1.00 | 1.00 | 1.00 | 1.00 | 1.00 | 1.00 | 1.00 | 1.00 | 1.00 | 1.00 |
| In-Process Volume [veh/h] | 0 | 0 | 0 | 0 | 0 | 0 | 0 | 0 | 0 | 0 | 0 | 0 |
| Site-Generated Trips [veh/h] | 0 | 0 | 0 | 0 | 0 | 0 | 0 | 0 | 0 | 0 | 0 | 0 |
| Diverted Trips [veh/h] | 0 | 0 | 0 | 0 | 0 | 0 | 0 | 0 | 0 | 0 | 0 | 0 |
| Pass-by Trips [veh/h] | 0 | 0 | 0 | 0 | 0 | 0 | 0 | 0 | 0 | 0 | 0 | 0 |
| Existing Site Adjustment Volume [veh/h] | 0 | 0 | 0 | 0 | 0 | 0 | 0 | 0 | 0 | 0 | 0 | 0 |
| Other Volume [veh/h] | 0 | 0 | 0 | 0 | 0 | 0 | 0 | 0 | 0 | 0 | 0 | 0 |
| Right-Turn on Red Volume [veh/h] | 0 | 0 | 0 | 0 | 0 | 0 | 0 | 0 | 0 | 0 | 0 | 0 |
| Total Hourly Volume [veh/h] | 0 | 1018 | 372 | 604 | 1366 | 0 | 616 | 3 | 361 | 0 | 0 | 0 |
| Peak Hour Factor | 1.0000 | 0.9240 | 0.9240 | 0.9240 | 0.9240 | 1.0000 | 0.9240 | 0.9240 | 0.9240 | 1.0000 | 1.0000 | 1.0000 |
| Other Adjustment Factor | 1.0000 | 1.0000 | 1.0000 | 1.0000 | 1.0000 | 1.0000 | 1.0000 | 1.0000 | 1.0000 | 1.0000 | 1.0000 | 1.0000 |
| Total 15-Minute Volume [veh/h] | 0 | 275 | 101 | 163 | 370 | 0 | 167 | 1 | 98 | 0 | 0 | 0 |
| Total Analysis Volume [veh/h] | 0 | 1102 | 403 | 654 | 1478 | 0 | 667 | 3 | 391 | 0 | 0 | 0 |
| Presence of On-Street Parking | No | | No | No | | No | No | | No | | | |
| On-Street Parking Maneuver Rate [/h] | 0 | 0 | 0 | 0 | 0 | 0 | 0 | 0 | 0 | 0 | 0 | 0 |
| Local Bus Stopping Rate [/h] | 0 | 0 | 0 | 0 | 0 | 0 | 0 | 0 | 0 | 0 | 0 | 0 |
| Pedestrian Volume [ped/h] | 0 | | | 0 | | | 0 | | | 0 | | |
| Bicycle Volume [bicycles/h] | 0 | | | 0 | | | 0 | | | 0 | | |

**Intersection Settings**

| | |
|---|---|
| Located in CBD | No |
| Signal Coordination Group | 2 - NS - Cedar |
| Cycle Length [s] | 120 |
| Coordination Type | Time of Day Pattern Coordinated |
| Actuation Type | Fully actuated |
| Offset [s] | 65.0 |
| Offset Reference | LagFO |
| Permissive Mode | SingleBand |
| Lost time [s] | 12.00 |

**Phasing & Timing**

| Control Type | Permiss | Permiss | Permiss | Protecte | Permiss | Permiss | Permiss | Permiss | Permiss | Permiss | Permiss | Permiss |
|---|---|---|---|---|---|---|---|---|---|---|---|---|
| Signal group | 0 | 2 | 0 | 1 | 6 | 0 | 0 | 8 | 0 | 0 | 0 | 0 |
| Auxiliary Signal Groups | | | | | | | | | | | | |
| Lead / Lag | - | - | - | Lead | - | - | - | - | - | - | - | - |
| Minimum Green [s] | 0 | 5 | 0 | 5 | 5 | 0 | 0 | 5 | 0 | 0 | 0 | 0 |
| Maximum Green [s] | 0 | 30 | 0 | 30 | 30 | 0 | 0 | 30 | 0 | 0 | 0 | 0 |
| Amber [s] | 0.0 | 4.4 | 0.0 | 4.4 | 4.4 | 0.0 | 0.0 | 3.7 | 0.0 | 0.0 | 0.0 | 0.0 |
| All red [s] | 0.0 | 1.0 | 0.0 | 1.0 | 1.0 | 0.0 | 0.0 | 1.0 | 0.0 | 0.0 | 0.0 | 0.0 |
| Split [s] | 0 | 45 | 0 | 29 | 74 | 0 | 0 | 46 | 0 | 0 | 0 | 0 |
| Vehicle Extension [s] | 0.0 | 3.0 | 0.0 | 3.0 | 3.0 | 0.0 | 0.0 | 3.0 | 0.0 | 0.0 | 0.0 | 0.0 |
| Walk [s] | 0 | 7 | 0 | 0 | 7 | 0 | 0 | 7 | 0 | 0 | 0 | 0 |
| Pedestrian Clearance [s] | 0 | 21 | 0 | 0 | 16 | 0 | 0 | 10 | 0 | 0 | 0 | 0 |
| I1, Start-Up Lost Time [s] | 0.0 | 2.0 | 0.0 | 2.0 | 2.0 | 0.0 | 0.0 | 2.0 | 0.0 | 0.0 | 0.0 | 0.0 |
| I2, Clearance Lost Time [s] | 0.0 | 3.4 | 0.0 | 3.4 | 3.4 | 0.0 | 0.0 | 2.7 | 0.0 | 0.0 | 0.0 | 0.0 |
| Minimum Recall | | No | | No | No | | | No | | | | |
| Maximum Recall | | No | | No | No | | | No | | | | |
| Pedestrian Recall | | No | | No | No | | | No | | | | |
| Detector Location [ft] | 0.0 | 0.0 | 0.0 | 0.0 | 0.0 | 0.0 | 0.0 | 0.0 | 0.0 | 0.0 | 0.0 | 0.0 |
| Detector Length [ft] | 0.0 | 0.0 | 0.0 | 0.0 | 0.0 | 0.0 | 0.0 | 0.0 | 0.0 | 0.0 | 0.0 | 0.0 |
| I, Upstream Filtering Factor | 1.00 | 1.00 | 1.00 | 1.00 | 1.00 | 1.00 | 1.00 | 1.00 | 1.00 | 1.00 | 1.00 | 1.00 |

**Exclusive Pedestrian Phase**

| | |
|---|---|
| Pedestrian Signal Group | 0 |
| Pedestrian Walk [s] | 0 |
| Pedestrian Clearance [s] | 0 |

**Lane Group Calculations**

| Lane Group | C | R | L | C | L | C | |
|---|---|---|---|---|---|---|---|
| L, Total Lost Time per Cycle [s] | 5.40 | 5.40 | 5.40 | 5.40 | 4.70 | 4.70 | |
| l1_p, Permitted Start-Up Lost Time [s] | 0.00 | 0.00 | 0.00 | 0.00 | 0.00 | 0.00 | |
| l2, Clearance Lost Time [s] | 3.40 | 3.40 | 3.40 | 3.40 | 2.70 | 2.70 | |
| g_i, Effective Green Time [s] | 40 | 40 | 24 | 69 | 41 | 41 | |
| g / C, Green / Cycle | 0.33 | 0.33 | 0.20 | 0.57 | 0.34 | 0.34 | |
| (v / s)_i Volume / Saturation Flow Rate | 0.22 | 0.26 | 0.20 | 0.30 | 0.31 | 0.34 | |
| s, saturation flow rate [veh/h] | 4929 | 1538 | 3347 | 4929 | 1707 | 1568 | |
| c, Capacity [veh/h] | 1628 | 508 | 659 | 2821 | 587 | 539 | |
| d1, Uniform Delay [s] | 34.65 | 36.45 | 48.07 | 15.67 | 37.49 | 39.05 | |
| k, delay calibration | 0.50 | 0.50 | 0.11 | 0.50 | 0.38 | 0.44 | |
| I, Upstream Filtering Factor | 1.00 | 1.00 | 1.00 | 1.00 | 1.00 | 1.00 | |
| d2, Incremental Delay [s] | 2.28 | 12.04 | 14.59 | 0.70 | 16.08 | 32.74 | |
| d3, Initial Queue Delay [s] | 0.00 | 0.00 | 0.00 | 0.00 | 0.00 | 0.00 | |
| Rp, platoon ratio | 1.00 | 1.00 | 1.00 | 1.00 | 1.00 | 1.00 | |
| PF, progression factor | 1.00 | 1.00 | 1.00 | 1.00 | 1.00 | 1.00 | |

**Lane Group Results**

| | | | | | | | |
|---|---|---|---|---|---|---|---|
| X, volume / capacity | 0.68 | 0.79 | 0.99 | 0.52 | 0.90 | 0.98 | |
| d, Delay for Lane Group [s/veh] | 36.93 | 48.49 | 62.66 | 16.37 | 53.57 | 71.79 | |
| Lane Group LOS | D | D | E | B | D | E | |
| Critical Lane Group | No | Yes | Yes | No | No | Yes | |
| 50th-Percentile Queue Length [veh] | 9.33 | 12.07 | 10.86 | 7.87 | 17.23 | 20.12 | |
| 50th-Percentile Queue Length [ft] | 233.15 | 301.68 | 271.44 | 196.80 | 430.75 | 502.93 | |
| 95th-Percentile Queue Length [veh] | 14.33 | 17.76 | 16.26 | 12.47 | 24.04 | 27.47 | |
| 95th-Percentile Queue Length [ft] | 358.36 | 444.11 | 406.53 | 311.84 | 600.94 | 686.82 | |

**Movement, Approach, & Intersection Results**

| | | | | | | | | | | | | |
|---|---|---|---|---|---|---|---|---|---|---|---|---|
| d_M, Delay for Movement [s/veh] | 0.00 | 36.93 | 48.49 | 62.66 | 16.37 | 0.00 | 57.30 | 71.79 | 71.79 | 0.00 | 0.00 | 0.00 |
| Movement LOS | | D | D | E | B | | E | E | E | | | |
| d_A, Approach Delay [s/veh] | 40.02 | | | 30.57 | | | 62.68 | | | 0.00 | | |
| Approach LOS | D | | | C | | | E | | | A | | |
| d_I, Intersection Delay [s/veh] | 40.85 | | | | | | | | | | | |
| Intersection LOS | D | | | | | | | | | | | |
| Intersection V/C | 0.884 | | | | | | | | | | | |

## Sequence

| | | | | | | | | | | | | | | | | |
|---|---|---|---|---|---|---|---|---|---|---|---|---|---|---|---|---|
| Ring 1 | 1 | 2 | - | - | - | - | - | - | - | - | - | - | - | - | - | - |
| Ring 2 | - | 6 | 8 | - | - | - | - | - | - | - | - | - | - | - | - | - |
| Ring 3 | - | - | - | - | - | - | - | - | - | - | - | - | - | - | - | - |
| Ring 4 | - | - | - | - | - | - | - | - | - | - | - | - | - | - | - | - |

**Intersection Level Of Service Report**
**Intersection 16: Cedar Ave (NS) / Slover Ave (EW)**

| | | | |
|---|---|---|---|
| Control Type: | Signalized | Delay (sec / veh): | 30.0 |
| Analysis Method: | HCM 2010 | Level Of Service: | C |
| Analysis Period: | 15 minutes | Volume to Capacity (v/c): | 0.756 |

**Intersection Setup**

| Name | Cedar Avenue | | | Cedar Avenue | | | Slover Avenue | | | Slover Avenue | | |
|---|---|---|---|---|---|---|---|---|---|---|---|---|
| Approach | Northbound | | | Southbound | | | Eastbound | | | Westbound | | |
| Lane Configuration | | | | | | | | | | | | |
| Turning Movement | Left | Thru | Right | Left | Thru | Right | Left | Thru | Right | Left | Thru | Right |
| Lane Width [ft] | 12.00 | 12.00 | 12.00 | 12.00 | 12.00 | 12.00 | 12.00 | 12.00 | 12.00 | 12.00 | 12.00 | 12.00 |
| No. of Lanes in Pocket | 1 | 0 | 0 | 1 | 0 | 0 | 1 | 0 | 0 | 1 | 0 | 0 |
| Pocket Length [ft] | 200.00 | 100.00 | 100.00 | 85.00 | 100.00 | 100.00 | 185.00 | 100.00 | 100.00 | 150.00 | 100.00 | 100.00 |
| Speed [mph] | 45.00 | | | 45.00 | | | 50.00 | | | 50.00 | | |
| Grade [%] | 0.00 | | | 0.00 | | | 0.00 | | | 0.00 | | |
| Crosswalk | Yes | | | Yes | | | Yes | | | Yes | | |

**volumes**

| Name | Cedar Avenue | | | Cedar Avenue | | | Slover Avenue | | | Slover Avenue | | |
|---|---|---|---|---|---|---|---|---|---|---|---|---|
| Base Volume Input [veh/h] | 81 | 786 | 13 | 131 | 1030 | 210 | 155 | 207 | 119 | 44 | 179 | 46 |
| Base Volume Adjustment Factor | 1.0000 | 1.0000 | 1.0000 | 1.0000 | 1.0000 | 1.0000 | 1.0000 | 1.0000 | 1.0000 | 1.0000 | 1.0000 | 1.0000 |
| Heavy Vehicles Percentage [%] | 5.00 | 5.00 | 5.00 | 5.00 | 5.00 | 5.00 | 2.00 | 2.00 | 2.00 | 2.00 | 2.00 | 2.00 |
| Growth Rate | 1.00 | 1.00 | 1.00 | 1.00 | 1.00 | 1.00 | 1.00 | 1.00 | 1.00 | 1.00 | 1.00 | 1.00 |
| In-Process Volume [veh/h] | 0 | 0 | 0 | 0 | 0 | 0 | 0 | 0 | 0 | 0 | 0 | 0 |
| Site-Generated Trips [veh/h] | 0 | 0 | 0 | 0 | 0 | 0 | 0 | 0 | 0 | 0 | 0 | 0 |
| Diverted Trips [veh/h] | 0 | 0 | 0 | 0 | 0 | 0 | 0 | 0 | 0 | 0 | 0 | 0 |
| Pass-by Trips [veh/h] | 0 | 0 | 0 | 0 | 0 | 0 | 0 | 0 | 0 | 0 | 0 | 0 |
| Existing Site Adjustment Volume [veh/h] | 0 | 0 | 0 | 0 | 0 | 0 | 0 | 0 | 0 | 0 | 0 | 0 |
| Other Volume [veh/h] | 0 | 0 | 0 | 0 | 0 | 0 | 0 | 0 | 0 | 0 | 0 | 0 |
| Right-Turn on Red Volume [veh/h] | 0 | 0 | 0 | 0 | 0 | 0 | 0 | 0 | 0 | 0 | 0 | 0 |
| Total Hourly Volume [veh/h] | 81 | 786 | 13 | 131 | 1030 | 210 | 155 | 207 | 119 | 44 | 179 | 46 |
| Peak Hour Factor | 0.8589 | 0.8890 | 0.8890 | 0.8890 | 0.8890 | 0.8890 | 0.8890 | 0.8890 | 0.8890 | 0.8890 | 0.8890 | 0.8890 |
| Other Adjustment Factor | 1.0000 | 1.0000 | 1.0000 | 1.0000 | 1.0000 | 1.0000 | 1.0000 | 1.0000 | 1.0000 | 1.0000 | 1.0000 | 1.0000 |
| Total 15-Minute Volume [veh/h] | 24 | 221 | 4 | 37 | 290 | 59 | 44 | 58 | 33 | 12 | 50 | 13 |
| Total Analysis Volume [veh/h] | 94 | 884 | 15 | 147 | 1159 | 236 | 174 | 233 | 134 | 49 | 201 | 52 |
| Presence of On-Street Parking | No | | No | No | | No | No | | No | No | | No |
| On-Street Parking Maneuver Rate [/h] | 0 | 0 | 0 | 0 | 0 | 0 | 0 | 0 | 0 | 0 | 0 | 0 |
| Local Bus Stopping Rate [/h] | 0 | 0 | 0 | 0 | 0 | 0 | 0 | 0 | 0 | 0 | 0 | 0 |
| Pedestrian Volume [ped/h] | 0 | | | 0 | | | 0 | | | 0 | | |
| Bicycle Volume [bicycles/h] | 0 | | | 0 | | | 0 | | | 0 | | |

**Intersection Settings**

| | |
|---|---|
| Located in CBD | No |
| Signal Coordination Group | 2 - NS - Cedar |
| Cycle Length [s] | 120 |
| Coordination Type | Time of Day Pattern Coordinated |
| Actuation Type | Fully actuated |
| Offset [s] | 36.0 |
| Offset Reference | LagFO |
| Permissive Mode | SingleBand |
| Lost time [s] | 16.00 |

**Phasing & Timing**

| Control Type | Protecte | Permiss | Permiss | Protecte | Permiss | Permiss | Protecte | Permiss | Permiss | Protecte | Permiss | Overlap |
|---|---|---|---|---|---|---|---|---|---|---|---|---|
| Signal group | 5 | 2 | 0 | 1 | 6 | 0 | 3 | 8 | 0 | 7 | 4 | 4 |
| Auxiliary Signal Groups | | | | | | | | | | | | 1,4 |
| Lead / Lag | Lead | - | - | Lead | - | - | Lead | - | - | Lead | - | - |
| Minimum Green [s] | 5 | 5 | 0 | 5 | 5 | 0 | 5 | 5 | 0 | 5 | 5 | 5 |
| Maximum Green [s] | 30 | 30 | 0 | 30 | 30 | 0 | 30 | 30 | 0 | 30 | 30 | 30 |
| Amber [s] | 4.8 | 4.8 | 0.0 | 4.8 | 4.8 | 0.0 | 5.2 | 5.2 | 0.0 | 5.2 | 5.2 | 5.2 |
| All red [s] | 1.0 | 1.0 | 0.0 | 1.0 | 1.0 | 0.0 | 1.0 | 1.0 | 0.0 | 1.0 | 1.0 | 1.0 |
| Split [s] | 11 | 52 | 0 | 11 | 52 | 0 | 12 | 45 | 0 | 12 | 45 | 45 |
| Vehicle Extension [s] | 3.0 | 3.0 | 0.0 | 3.0 | 3.0 | 0.0 | 3.0 | 3.0 | 0.0 | 3.0 | 3.0 | 3.0 |
| Walk [s] | 0 | 7 | 0 | 0 | 7 | 0 | 0 | 7 | 0 | 0 | 7 | 7 |
| Pedestrian Clearance [s] | 0 | 31 | 0 | 0 | 20 | 0 | 0 | 26 | 0 | 0 | 31 | 31 |
| I1, Start-Up Lost Time [s] | 2.0 | 2.0 | 0.0 | 2.0 | 2.0 | 0.0 | 2.0 | 2.0 | 0.0 | 2.0 | 2.0 | 2.0 |
| I2, Clearance Lost Time [s] | 3.8 | 3.8 | 0.0 | 3.8 | 3.8 | 0.0 | 4.2 | 4.2 | 0.0 | 4.2 | 4.2 | 4.2 |
| Minimum Recall | No | No | | No | No | | No | No | | No | No | No |
| Maximum Recall | No | No | | No | No | | No | No | | No | No | No |
| Pedestrian Recall | No | No | | No | No | | No | No | | No | No | No |
| Detector Location [ft] | 0.0 | 0.0 | 0.0 | 0.0 | 0.0 | 0.0 | 0.0 | 0.0 | 0.0 | 0.0 | 0.0 | 0.0 |
| Detector Length [ft] | 0.0 | 0.0 | 0.0 | 0.0 | 0.0 | 0.0 | 0.0 | 0.0 | 0.0 | 0.0 | 0.0 | 0.0 |
| I, Upstream Filtering Factor | 1.00 | 1.00 | 1.00 | 1.00 | 1.00 | 1.00 | 1.00 | 1.00 | 1.00 | 1.00 | 1.00 | 1.00 |

**Exclusive Pedestrian Phase**

| | |
|---|---|
| Pedestrian Signal Group | 0 |
| Pedestrian Walk [s] | 0 |
| Pedestrian Clearance [s] | 0 |

**Lane Group Calculations**

| Lane Group | L | C | C | L | C | C | L | C | L | C | R |
|---|---|---|---|---|---|---|---|---|---|---|---|
| L, Total Lost Time per Cycle [s] | 5.80 | 5.80 | 5.80 | 5.80 | 5.80 | 5.80 | 6.20 | 6.20 | 6.20 | 6.20 | 5.80 |
| l1_p, Permitted Start-Up Lost Time [s] | 0.00 | 0.00 | 0.00 | 0.00 | 0.00 | 0.00 | 0.00 | 0.00 | 0.00 | 0.00 | 0.00 |
| l2, Clearance Lost Time [s] | 0.00 | 3.80 | 3.80 | 0.00 | 3.80 | 3.80 | 4.20 | 4.20 | 4.20 | 4.20 | 0.00 |
| g_i, Effective Green Time [s] | 70 | 60 | 60 | 70 | 60 | 60 | 6 | 27 | 4 | 26 | 36 |
| g / C, Green / Cycle | 0.58 | 0.50 | 0.50 | 0.58 | 0.50 | 0.50 | 0.05 | 0.23 | 0.04 | 0.22 | 0.30 |
| (v / s)_i Volume / Saturation Flow Rate | 0.17 | 0.25 | 0.25 | 0.20 | 0.39 | 0.40 | 0.05 | 0.21 | 0.03 | 0.11 | 0.03 |
| s, saturation flow rate [veh/h] | 541 | 1810 | 1799 | 728 | 1810 | 1706 | 3445 | 1750 | 1774 | 1863 | 1583 |
| c, Capacity [veh/h] | 292 | 906 | 901 | 436 | 896 | 845 | 169 | 399 | 64 | 401 | 478 |
| d1, Uniform Delay [s] | 16.68 | 12.45 | 12.45 | 7.82 | 16.02 | 16.27 | 57.10 | 45.29 | 57.35 | 41.45 | 30.24 |
| k, delay calibration | 0.50 | 0.50 | 0.50 | 0.50 | 0.50 | 0.50 | 0.11 | 0.16 | 0.11 | 0.11 | 0.11 |
| I, Upstream Filtering Factor | 1.00 | 1.00 | 1.00 | 1.00 | 1.00 | 1.00 | 1.00 | 1.00 | 1.00 | 1.00 | 1.00 |
| d2, Incremental Delay [s] | 2.90 | 1.95 | 1.96 | 2.09 | 7.18 | 8.27 | 39.80 | 12.44 | 16.56 | 0.97 | 0.10 |
| d3, Initial Queue Delay [s] | 0.00 | 0.00 | 0.00 | 0.00 | 0.00 | 0.00 | 0.00 | 0.00 | 0.00 | 0.00 | 0.00 |
| Rp, platoon ratio | 1.33 | 1.33 | 1.33 | 1.33 | 1.33 | 1.33 | 1.00 | 1.00 | 1.00 | 1.00 | 1.00 |
| PF, progression factor | 1.00 | 1.00 | 1.00 | 1.00 | 1.00 | 1.00 | 1.00 | 1.00 | 1.00 | 1.00 | 1.00 |

**Lane Group Results**

| | | | | | | | | | | | |
|---|---|---|---|---|---|---|---|---|---|---|---|
| X, volume / capacity | 0.32 | 0.50 | 0.50 | 0.34 | 0.79 | 0.81 | 1.03 | 0.92 | 0.76 | 0.50 | 0.11 |
| d, Delay for Lane Group [s/veh] | 19.58 | 14.40 | 14.41 | 9.90 | 23.20 | 24.54 | 96.90 | 57.73 | 73.90 | 42.42 | 30.34 |
| Lane Group LOS | B | B | B | A | C | C | F | E | E | D | C |
| Critical Lane Group | Yes | No | No | No | No | Yes | No | Yes | Yes | No | No |
| 50th-Percentile Queue Length [veh] | 0.76 | 5.18 | 5.15 | 1.09 | 11.56 | 11.55 | 3.42 | 11.57 | 1.73 | 5.15 | 1.06 |
| 50th-Percentile Queue Length [ft] | 19.11 | 129.55 | 128.87 | 27.35 | 289.07 | 288.78 | 85.45 | 289.32 | 43.14 | 128.76 | 26.54 |
| 95th-Percentile Queue Length [veh] | 1.38 | 8.92 | 8.88 | 1.97 | 17.14 | 17.13 | 6.15 | 17.15 | 3.11 | 8.87 | 1.91 |
| 95th-Percentile Queue Length [ft] | 34.40 | 222.89 | 221.95 | 49.23 | 428.48 | 428.13 | 153.81 | 428.79 | 77.64 | 221.80 | 47.76 |

**Movement, Approach, & Intersection Results**

| | | | | | | | | | | | | |
|---|---|---|---|---|---|---|---|---|---|---|---|---|
| d_M, Delay for Movement [s/veh] | 19.58 | 14.41 | 14.41 | 9.90 | 23.72 | 24.54 | 96.90 | 57.73 | 57.73 | 73.90 | 42.42 | 30.34 |
| Movement LOS | B | B | B | A | C | C | F | E | E | E | D | C |
| d_A, Approach Delay [s/veh] | 14.90 | | | 22.53 | | | 70.32 | | | 45.45 | | |
| Approach LOS | B | | | C | | | E | | | D | | |
| d_I, Intersection Delay [s/veh] | 29.99 | | | | | | | | | | | |
| Intersection LOS | C | | | | | | | | | | | |
| Intersection V/C | 0.756 | | | | | | | | | | | |

## Sequence

| | | | | | | | | | | | | | | | | |
|---|---|---|---|---|---|---|---|---|---|---|---|---|---|---|---|---|
| Ring 1 | 1 | 2 | 3 | 4 | - | - | - | - | - | - | - | - | - | - | - | - |
| Ring 2 | 5 | 6 | 7 | 8 | - | - | - | - | - | - | - | - | - | - | - | - |
| Ring 3 | - | - | - | - | - | - | - | - | - | - | - | - | - | - | - | - |
| Ring 4 | - | - | - | - | - | - | - | - | - | - | - | - | - | - | - | - |

**Intersection Level Of Service Report**
**Intersection 1: Sierra Ave (NS) / San Bernardino Ave (EW)**

| | | | |
|---|---|---|---|
| Control Type: | Signalized | Delay (sec / veh): | 34.8 |
| Analysis Method: | HCM 2010 | Level Of Service: | C |
| Analysis Period: | 15 minutes | Volume to Capacity (v/c): | 0.796 |

**Intersection Setup**

| Name | Sierra Avenue | | | Sierra Avenue | | | San Bernardino Avenue | | | San Bernardino Avenue | | |
|---|---|---|---|---|---|---|---|---|---|---|---|---|
| Approach | Northbound | | | Southbound | | | Eastbound | | | Westbound | | |
| Lane Configuration | | | | | | | | | | | | |
| Turning Movement | Left | Thru | Right | Left | Thru | Right | Left | Thru | Right | Left | Thru | Right |
| Lane Width [ft] | 12.00 | 12.00 | 12.00 | 12.00 | 12.00 | 12.00 | 12.00 | 12.00 | 12.00 | 12.00 | 12.00 | 12.00 |
| No. of Lanes in Pocket | 1 | 0 | 1 | 1 | 0 | 0 | 1 | 0 | 0 | 1 | 0 | 0 |
| Pocket Length [ft] | 140.00 | 100.00 | 140.00 | 150.00 | 100.00 | 100.00 | 150.00 | 100.00 | 100.00 | 240.00 | 100.00 | 100.00 |
| Speed [mph] | 35.00 | | | 35.00 | | | 35.00 | | | 30.00 | | |
| Grade [%] | 0.00 | | | 0.00 | | | 0.00 | | | 0.00 | | |
| Crosswalk | Yes | | | Yes | | | Yes | | | Yes | | |

**volumes**

| Name | Sierra Avenue | | | Sierra Avenue | | | San Bernardino Avenue | | | San Bernardino Avenue | | |
|---|---|---|---|---|---|---|---|---|---|---|---|---|
| Base Volume Input [veh/h] | 262 | 1386 | 192 | 64 | 955 | 100 | 170 | 334 | 156 | 171 | 277 | 72 |
| Base Volume Adjustment Factor | 1.0000 | 1.0000 | 1.0000 | 1.0000 | 1.0000 | 1.0000 | 1.0000 | 1.0000 | 1.0000 | 1.0000 | 1.0000 | 1.0000 |
| Heavy Vehicles Percentage [%] | 2.00 | 2.00 | 2.00 | 2.00 | 2.00 | 2.00 | 2.00 | 2.00 | 2.00 | 2.00 | 2.00 | 2.00 |
| Growth Rate | 1.00 | 1.00 | 1.00 | 1.00 | 1.00 | 1.00 | 1.00 | 1.00 | 1.00 | 1.00 | 1.00 | 1.00 |
| In-Process Volume [veh/h] | 0 | 0 | 0 | 0 | 0 | 0 | 0 | 0 | 0 | 0 | 0 | 0 |
| Site-Generated Trips [veh/h] | 0 | 0 | 0 | 0 | 0 | 0 | 0 | 0 | 0 | 0 | 0 | 0 |
| Diverted Trips [veh/h] | 0 | 0 | 0 | 0 | 0 | 0 | 0 | 0 | 0 | 0 | 0 | 0 |
| Pass-by Trips [veh/h] | 0 | 0 | 0 | 0 | 0 | 0 | 0 | 0 | 0 | 0 | 0 | 0 |
| Existing Site Adjustment Volume [veh/h] | 0 | 0 | 0 | 0 | 0 | 0 | 0 | 0 | 0 | 0 | 0 | 0 |
| Other Volume [veh/h] | 0 | 0 | 0 | 0 | 0 | 0 | 0 | 0 | 0 | 0 | 0 | 0 |
| Right-Turn on Red Volume [veh/h] | 0 | 0 | 0 | 0 | 0 | 0 | 0 | 0 | 0 | 0 | 0 | 0 |
| Total Hourly Volume [veh/h] | 262 | 1386 | 192 | 64 | 955 | 100 | 170 | 334 | 156 | 171 | 277 | 72 |
| Peak Hour Factor | 0.9020 | 0.9020 | 0.9020 | 0.9020 | 0.9200 | 0.9020 | 0.9020 | 0.9020 | 0.9020 | 0.9020 | 0.9020 | 0.9020 |
| Other Adjustment Factor | 1.0000 | 1.0000 | 1.0000 | 1.0000 | 1.0000 | 1.0000 | 1.0000 | 1.0000 | 1.0000 | 1.0000 | 1.0000 | 1.0000 |
| Total 15-Minute Volume [veh/h] | 73 | 384 | 53 | 18 | 260 | 28 | 47 | 93 | 43 | 47 | 77 | 20 |
| Total Analysis Volume [veh/h] | 290 | 1537 | 213 | 71 | 1038 | 111 | 188 | 370 | 173 | 190 | 307 | 80 |
| Presence of On-Street Parking | No | | No | No | | No | No | | No | No | | No |
| On-Street Parking Maneuver Rate [/h] | 0 | 0 | 0 | 0 | 0 | 0 | 0 | 0 | 0 | 0 | 0 | 0 |
| Local Bus Stopping Rate [/h] | 0 | 0 | 0 | 0 | 0 | 0 | 0 | 0 | 0 | 0 | 0 | 0 |
| Pedestrian Volume [ped/h] | 0 | | | 0 | | | 0 | | | 0 | | |
| Bicycle Volume [bicycles/h] | 0 | | | 0 | | | 0 | | | 0 | | |

**Intersection Settings**

| | |
|---|---|
| Located in CBD | No |
| Signal Coordination Group | 1 - NS - Sierra |
| Cycle Length [s] | 120 |
| Coordination Type | Time of Day Pattern Coordinated |
| Actuation Type | Fully actuated |
| Offset [s] | 0.0 |
| Offset Reference | LagFO |
| Permissive Mode | SingleBand |
| Lost time [s] | 16.00 |

**Phasing & Timing**

| Control Type | Protecte | Permiss | Overlap | Protecte | Permiss | Permiss | Protecte | Permiss | Permiss | Protecte | Permiss | Permiss |
|---|---|---|---|---|---|---|---|---|---|---|---|---|
| Signal group | 5 | 2 | 2 | 1 | 6 | 0 | 3 | 8 | 8 | 7 | 4 | 0 |
| Auxiliary Signal Groups | | | 2,7 | | | | | | | | | |
| Lead / Lag | Lead | - | - | Lead | - | - | Lead | - | - | Lead | - | - |
| Minimum Green [s] | 5 | 5 | 5 | 5 | 5 | 0 | 5 | 5 | 5 | 5 | 5 | 0 |
| Maximum Green [s] | 30 | 30 | 30 | 30 | 30 | 0 | 30 | 30 | 30 | 30 | 30 | 0 |
| Amber [s] | 4.1 | 4.1 | 4.1 | 4.1 | 4.1 | 0.0 | 4.1 | 4.1 | 4.1 | 3.7 | 3.7 | 0.0 |
| All red [s] | 1.0 | 1.0 | 1.0 | 1.0 | 1.0 | 0.0 | 1.0 | 1.0 | 1.0 | 1.0 | 1.0 | 0.0 |
| Split [s] | 34 | 59 | 59 | 11 | 36 | 0 | 24 | 30 | 30 | 20 | 26 | 0 |
| Vehicle Extension [s] | 3.0 | 3.0 | 3.0 | 3.0 | 3.0 | 0.0 | 3.0 | 3.0 | 3.0 | 3.0 | 3.0 | 0.0 |
| Walk [s] | 0 | 7 | 7 | 0 | 7 | 0 | 0 | 6 | 6 | 0 | 6 | 0 |
| Pedestrian Clearance [s] | 0 | 22 | 22 | 0 | 23 | 0 | 0 | 18 | 18 | 0 | 15 | 0 |
| I1, Start-Up Lost Time [s] | 2.0 | 2.0 | 2.0 | 2.0 | 2.0 | 0.0 | 2.0 | 2.0 | 2.0 | 2.0 | 2.0 | 0.0 |
| I2, Clearance Lost Time [s] | 3.1 | 3.1 | 3.1 | 3.1 | 3.1 | 0.0 | 3.1 | 3.1 | 3.1 | 2.7 | 2.7 | 0.0 |
| Minimum Recall | No | No | No | No | No | | No | No | | No | No | |
| Maximum Recall | No | No | No | No | No | | No | No | | No | No | |
| Pedestrian Recall | No | No | No | No | No | | No | No | | No | No | |
| Detector Location [ft] | 0.0 | 0.0 | 0.0 | 0.0 | 0.0 | 0.0 | 0.0 | 0.0 | 0.0 | 0.0 | 0.0 | 0.0 |
| Detector Length [ft] | 0.0 | 0.0 | 0.0 | 0.0 | 0.0 | 0.0 | 0.0 | 0.0 | 0.0 | 0.0 | 0.0 | 0.0 |
| I, Upstream Filtering Factor | 1.00 | 1.00 | 1.00 | 1.00 | 1.00 | 1.00 | 1.00 | 1.00 | 1.00 | 1.00 | 1.00 | 1.00 |

**Exclusive Pedestrian Phase**

| | |
|---|---|
| Pedestrian Signal Group | 0 |
| Pedestrian Walk [s] | 0 |
| Pedestrian Clearance [s] | 0 |

**Lane Group Calculations**

| Lane Group | L | C | R | L | C | R | L | C | R | L | C | C |
|---|---|---|---|---|---|---|---|---|---|---|---|---|
| L, Total Lost Time per Cycle [s] | 5.10 | 5.10 | 4.70 | 5.10 | 5.10 | 5.10 | 5.10 | 5.10 | 5.10 | 4.70 | 4.70 | 4.70 |
| l1_p, Permitted Start-Up Lost Time [s] | 0.00 | 0.00 | 0.00 | 0.00 | 0.00 | 0.00 | 0.00 | 0.00 | 0.00 | 0.00 | 0.00 | 0.00 |
| l2, Clearance Lost Time [s] | 3.10 | 3.10 | 0.00 | 3.10 | 3.10 | 3.10 | 3.10 | 3.10 | 3.10 | 2.70 | 2.70 | 2.70 |
| g_i, Effective Green Time [s] | 22 | 64 | 83 | 6 | 48 | 48 | 15 | 16 | 16 | 15 | 16 | 16 |
| g / C, Green / Cycle | 0.18 | 0.53 | 0.69 | 0.05 | 0.40 | 0.40 | 0.12 | 0.13 | 0.13 | 0.12 | 0.13 | 0.13 |
| (v / s)_i Volume / Saturation Flow Rate | 0.16 | 0.43 | 0.13 | 0.04 | 0.29 | 0.07 | 0.11 | 0.10 | 0.11 | 0.11 | 0.11 | 0.11 |
| s, saturation flow rate [veh/h] | 1774 | 3547 | 1583 | 1774 | 3547 | 1583 | 1774 | 3547 | 1583 | 1774 | 1863 | 1732 |
| c, Capacity [veh/h] | 319 | 1874 | 1099 | 89 | 1414 | 631 | 217 | 468 | 209 | 218 | 247 | 230 |
| d1, Uniform Delay [s] | 44.71 | 13.74 | 1.43 | 55.46 | 23.23 | 17.93 | 51.73 | 50.51 | 50.79 | 51.71 | 50.57 | 50.64 |
| k, delay calibration | 0.20 | 0.50 | 0.50 | 0.13 | 0.50 | 0.50 | 0.17 | 0.11 | 0.11 | 0.28 | 0.11 | 0.11 |
| I, Upstream Filtering Factor | 1.00 | 1.00 | 1.00 | 1.00 | 1.00 | 1.00 | 1.00 | 1.00 | 1.00 | 1.00 | 1.00 | 1.00 |
| d2, Incremental Delay [s] | 16.09 | 4.16 | 0.39 | 18.36 | 3.41 | 0.61 | 14.64 | 3.04 | 8.10 | 22.13 | 6.13 | 6.92 |
| d3, Initial Queue Delay [s] | 0.00 | 0.00 | 0.00 | 0.00 | 0.00 | 0.00 | 0.00 | 0.00 | 0.00 | 0.00 | 0.00 | 0.00 |
| Rp, platoon ratio | 1.33 | 1.33 | 1.33 | 1.33 | 1.33 | 1.33 | 1.00 | 1.00 | 1.00 | 1.00 | 1.00 | 1.00 |
| PF, progression factor | 1.00 | 1.00 | 1.00 | 1.00 | 1.00 | 1.00 | 1.00 | 1.00 | 1.00 | 1.00 | 1.00 | 1.00 |

**Lane Group Results**

| | | | | | | | | | | | | |
|---|---|---|---|---|---|---|---|---|---|---|---|---|
| X, volume / capacity | 0.91 | 0.82 | 0.19 | 0.80 | 0.73 | 0.18 | 0.87 | 0.79 | 0.83 | 0.87 | 0.81 | 0.82 |
| d, Delay for Lane Group [s/veh] | 60.80 | 17.90 | 1.82 | 73.82 | 26.64 | 18.53 | 66.37 | 53.54 | 58.89 | 73.84 | 56.70 | 57.57 |
| Lane Group LOS | E | B | A | E | C | B | E | D | E | E | E | E |
| Critical Lane Group | No | Yes | No | Yes | No | No | No | No | Yes | Yes | No | No |
| 50th-Percentile Queue Length [veh] | 9.29 | 11.41 | 0.50 | 2.53 | 10.41 | 1.65 | 6.38 | 5.53 | 5.49 | 6.95 | 6.24 | 5.92 |
| 50th-Percentile Queue Length [ft] | 232.30 | 285.13 | 12.44 | 63.18 | 260.35 | 41.33 | 159.60 | 138.35 | 137.21 | 173.81 | 155.88 | 148.02 |
| 95th-Percentile Queue Length [veh] | 14.29 | 16.94 | 0.90 | 4.55 | 15.71 | 2.98 | 10.53 | 9.39 | 9.33 | 11.28 | 10.33 | 9.91 |
| 95th-Percentile Queue Length [ft] | 357.29 | 423.60 | 22.39 | 113.73 | 392.65 | 74.39 | 263.19 | 234.80 | 233.26 | 281.92 | 258.25 | 247.78 |

**Movement, Approach, & Intersection Results**

| | | | | | | | | | | | | |
|---|---|---|---|---|---|---|---|---|---|---|---|---|
| d_M, Delay for Movement [s/veh] | 60.80 | 17.90 | 1.82 | 73.82 | 26.64 | 18.53 | 66.37 | 53.54 | 58.89 | 73.84 | 57.00 | 57.57 |
| Movement LOS | E | B | A | E | C | B | E | D | E | E | E | E |
| d_A, Approach Delay [s/veh] | 22.32 | | | 28.65 | | | 58.10 | | | 62.63 | | |
| Approach LOS | C | | | C | | | E | | | E | | |
| d_I, Intersection Delay [s/veh] | 34.83 | | | | | | | | | | | |
| Intersection LOS | C | | | | | | | | | | | |
| Intersection V/C | 0.796 | | | | | | | | | | | |

## Sequence

| | | | | | | | | | | | | | | | | |
|---|---|---|---|---|---|---|---|---|---|---|---|---|---|---|---|---|
| Ring 1 | 1 | 2 | 3 | 4 | - | - | - | - | - | - | - | - | - | - | - | - |
| Ring 2 | 5 | 6 | 7 | 8 | - | - | - | - | - | - | - | - | - | - | - | - |
| Ring 3 | - | - | - | - | - | - | - | - | - | - | - | - | - | - | - | - |
| Ring 4 | - | - | - | - | - | - | - | - | - | - | - | - | - | - | - | - |

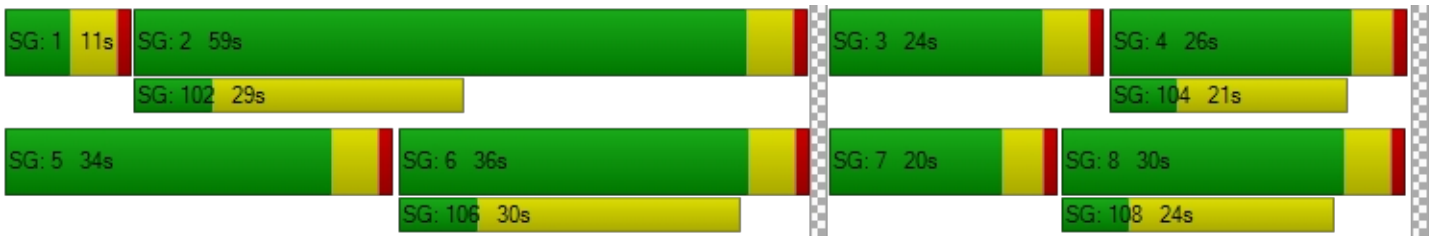

**Intersection Level Of Service Report**
**Intersection 2: Sierra Ave (NS) / Valley Blvd (EW)**

| | | | |
|---|---|---|---|
| Control Type: | Signalized | Delay (sec / veh): | 34.2 |
| Analysis Method: | HCM 2010 | Level Of Service: | C |
| Analysis Period: | 15 minutes | Volume to Capacity (v/c): | 0.966 |

**Intersection Setup**

| Name | Sierra Avenue | | | Sierra Avenue | | | Valley Boulevard | | | Valley Boulevard | | |
|---|---|---|---|---|---|---|---|---|---|---|---|---|
| Approach | Northbound | | | Southbound | | | Eastbound | | | Westbound | | |
| Lane Configuration | | | | | | | | | | 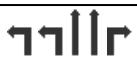 | | |
| Turning Movement | Left | Thru | Right | Left | Thru | Right | Left | Thru | Right | Left | Thru | Right |
| Lane Width [ft] | 12.00 | 12.00 | 12.00 | 12.00 | 12.00 | 12.00 | 12.00 | 12.00 | 12.00 | 12.00 | 12.00 | 12.00 |
| No. of Lanes in Pocket | 2 | 0 | 0 | 2 | 0 | 0 | 2 | 0 | 0 | 2 | 0 | 0 |
| Pocket Length [ft] | 370.00 | 100.00 | 100.00 | 165.00 | 100.00 | 100.00 | 260.00 | 100.00 | 100.00 | 355.00 | 100.00 | 100.00 |
| Speed [mph] | 35.00 | | | 35.00 | | | 40.00 | | | 40.00 | | |
| Grade [%] | 0.00 | | | 0.00 | | | 0.00 | | | 0.00 | | |
| Crosswalk | Yes | | | Yes | | | Yes | | | Yes | | |

**volumes**

| Name | Sierra Avenue | | | Sierra Avenue | | | Valley Boulevard | | | Valley Boulevard | | |
|---|---|---|---|---|---|---|---|---|---|---|---|---|
| Base Volume Input [veh/h] | 408 | 1548 | 934 | 178 | 1418 | 205 | 242 | 479 | 369 | 549 | 445 | 236 |
| Base Volume Adjustment Factor | 1.0000 | 1.0000 | 1.0000 | 1.0000 | 1.0000 | 1.0000 | 1.0000 | 1.0000 | 1.0000 | 1.0000 | 1.0000 | 1.0000 |
| Heavy Vehicles Percentage [%] | 2.00 | 2.00 | 2.00 | 2.00 | 2.00 | 2.00 | 4.00 | 4.00 | 4.00 | 4.00 | 4.00 | 4.00 |
| Growth Rate | 1.00 | 1.00 | 1.00 | 1.00 | 1.00 | 1.00 | 1.00 | 1.00 | 1.00 | 1.00 | 1.00 | 1.00 |
| In-Process Volume [veh/h] | 0 | 0 | 0 | 0 | 0 | 0 | 0 | 0 | 0 | 0 | 0 | 0 |
| Site-Generated Trips [veh/h] | 0 | 0 | 0 | 0 | 0 | 0 | 0 | 0 | 0 | 0 | 0 | 0 |
| Diverted Trips [veh/h] | 0 | 0 | 0 | 0 | 0 | 0 | 0 | 0 | 0 | 0 | 0 | 0 |
| Pass-by Trips [veh/h] | 0 | 0 | 0 | 0 | 0 | 0 | 0 | 0 | 0 | 0 | 0 | 0 |
| Existing Site Adjustment Volume [veh/h] | 0 | 0 | 0 | 0 | 0 | 0 | 0 | 0 | 0 | 0 | 0 | 0 |
| Other Volume [veh/h] | 0 | 0 | 0 | 0 | 0 | 0 | 0 | 0 | 0 | 0 | 0 | 0 |
| Right-Turn on Red Volume [veh/h] | 0 | 0 | 0 | 0 | 0 | 0 | 0 | 0 | 0 | 0 | 0 | 0 |
| Total Hourly Volume [veh/h] | 408 | 1548 | 934 | 178 | 1418 | 205 | 242 | 479 | 369 | 549 | 445 | 236 |
| Peak Hour Factor | 0.9720 | 0.9720 | 0.9720 | 0.9720 | 0.9720 | 0.9720 | 0.9720 | 0.9720 | 0.9720 | 0.9720 | 0.9720 | 0.9720 |
| Other Adjustment Factor | 1.0000 | 1.0000 | 1.0000 | 1.0000 | 1.0000 | 1.0000 | 1.0000 | 1.0000 | 1.0000 | 1.0000 | 1.0000 | 1.0000 |
| Total 15-Minute Volume [veh/h] | 105 | 398 | 240 | 46 | 365 | 53 | 62 | 123 | 95 | 141 | 114 | 61 |
| Total Analysis Volume [veh/h] | 420 | 1593 | 961 | 183 | 1459 | 211 | 249 | 493 | 380 | 565 | 458 | 243 |
| Presence of On-Street Parking | No | | No | No | | No | No | | No | No | | No |
| On-Street Parking Maneuver Rate [/h] | 0 | 0 | 0 | 0 | 0 | 0 | 0 | 0 | 0 | 0 | 0 | 0 |
| Local Bus Stopping Rate [/h] | 0 | 0 | 0 | 0 | 0 | 0 | 0 | 0 | 0 | 0 | 0 | 0 |
| Pedestrian Volume [ped/h] | 0 | | | 0 | | | 0 | | | 0 | | |
| Bicycle Volume [bicycles/h] | 0 | | | 0 | | | 0 | | | 0 | | |

**Intersection Settings**

| | |
|---|---|
| Located in CBD | No |
| Signal Coordination Group | 1 - NS - Sierra |
| Cycle Length [s] | 120 |
| Coordination Type | Time of Day Pattern Coordinated |
| Actuation Type | Fully actuated |
| Offset [s] | 59.0 |
| Offset Reference | LagFO |
| Permissive Mode | SingleBand |
| Lost time [s] | 16.00 |

**Phasing & Timing**

| Control Type | Protecte | Permiss | Overlap | Protecte | Permiss | Permiss | Protecte | Permiss | Overlap | Protecte | Permiss | Overlap |
|---|---|---|---|---|---|---|---|---|---|---|---|---|
| Signal group | 5 | 2 | 2 | 1 | 6 | 6 | 3 | 8 | 8 | 7 | 4 | 4 |
| Auxiliary Signal Groups | | | 2,7 | | | 3,6 | | | 5,8 | | | 1,4 |
| Lead / Lag | Lead | - | - | Lead | - | - | Lead | - | - | Lead | - | - |
| Minimum Green [s] | 5 | 5 | 5 | 5 | 5 | 5 | 5 | 5 | 5 | 5 | 5 | 5 |
| Maximum Green [s] | 30 | 30 | 30 | 30 | 30 | 30 | 30 | 30 | 30 | 30 | 30 | 30 |
| Amber [s] | 4.1 | 4.1 | 4.1 | 4.1 | 4.1 | 4.1 | 4.4 | 4.4 | 4.4 | 4.4 | 4.4 | 4.4 |
| All red [s] | 1.0 | 1.0 | 1.0 | 1.0 | 1.0 | 1.0 | 1.0 | 1.0 | 1.0 | 1.0 | 1.0 | 1.0 |
| Split [s] | 20 | 61 | 61 | 12 | 53 | 53 | 17 | 21 | 21 | 26 | 30 | 30 |
| Vehicle Extension [s] | 3.0 | 3.0 | 3.0 | 3.0 | 3.0 | 3.0 | 3.0 | 3.0 | 3.0 | 3.0 | 3.0 | 3.0 |
| Walk [s] | 0 | 7 | 7 | 0 | 7 | 7 | 0 | 5 | 5 | 0 | 5 | 5 |
| Pedestrian Clearance [s] | 0 | 24 | 24 | 0 | 26 | 26 | 0 | 10 | 10 | 0 | 10 | 10 |
| I1, Start-Up Lost Time [s] | 2.0 | 2.0 | 2.0 | 2.0 | 2.0 | 2.0 | 2.0 | 2.0 | 2.0 | 2.0 | 2.0 | 2.0 |
| I2, Clearance Lost Time [s] | 3.1 | 3.1 | 3.1 | 3.1 | 3.1 | 3.1 | 3.4 | 3.4 | 3.4 | 3.4 | 3.4 | 3.4 |
| Minimum Recall | No | No | No | No | No | | No | No | No | No | No | No |
| Maximum Recall | No | No | No | No | No | | No | No | No | No | No | No |
| Pedestrian Recall | No | No | No | No | No | | No | No | No | No | No | No |
| Detector Location [ft] | 0.0 | 0.0 | 0.0 | 0.0 | 0.0 | 0.0 | 0.0 | 0.0 | 0.0 | 0.0 | 0.0 | 0.0 |
| Detector Length [ft] | 0.0 | 0.0 | 0.0 | 0.0 | 0.0 | 0.0 | 0.0 | 0.0 | 0.0 | 0.0 | 0.0 | 0.0 |
| I, Upstream Filtering Factor | 1.00 | 1.00 | 1.00 | 1.00 | 1.00 | 1.00 | 1.00 | 1.00 | 1.00 | 1.00 | 1.00 | 1.00 |

**Exclusive Pedestrian Phase**

| | |
|---|---|
| Pedestrian Signal Group | 0 |
| Pedestrian Walk [s] | 0 |
| Pedestrian Clearance [s] | 0 |

**Lane Group Calculations**

| Lane Group | L | C | R | L | C | C | L | C | R | L | C | R |
|---|---|---|---|---|---|---|---|---|---|---|---|---|
| L, Total Lost Time per Cycle [s] | 5.10 | 5.10 | 5.40 | 5.10 | 5.10 | 5.10 | 5.40 | 5.40 | 5.10 | 5.40 | 5.40 | 5.10 |
| l1_p, Permitted Start-Up Lost Time [s] | 0.00 | 0.00 | 0.00 | 0.00 | 0.00 | 0.00 | 0.00 | 0.00 | 0.00 | 0.00 | 0.00 | 0.00 |
| l2, Clearance Lost Time [s] | 3.10 | 3.10 | 0.00 | 3.10 | 3.10 | 3.10 | 3.40 | 3.40 | 0.00 | 3.40 | 3.40 | 0.00 |
| g_i, Effective Green Time [s] | 15 | 57 | 83 | 7 | 49 | 49 | 11 | 14 | 35 | 21 | 24 | 36 |
| g / C, Green / Cycle | 0.12 | 0.48 | 0.69 | 0.06 | 0.41 | 0.41 | 0.09 | 0.12 | 0.29 | 0.17 | 0.20 | 0.30 |
| (v / s)_i Volume / Saturation Flow Rate | 0.12 | 0.31 | 0.61 | 0.05 | 0.32 | 0.32 | 0.07 | 0.10 | 0.24 | 0.17 | 0.13 | 0.16 |
| s, saturation flow rate [veh/h] | 3445 | 5074 | 1583 | 3445 | 3547 | 1745 | 3379 | 4977 | 1553 | 3379 | 3478 | 1553 |
| c, Capacity [veh/h] | 431 | 2417 | 1094 | 203 | 1455 | 716 | 305 | 587 | 447 | 581 | 695 | 471 |
| d1, Uniform Delay [s] | 49.89 | 15.80 | 2.66 | 55.02 | 22.75 | 22.80 | 51.88 | 49.53 | 34.65 | 46.01 | 40.44 | 29.11 |
| k, delay calibration | 0.11 | 0.50 | 0.50 | 0.11 | 0.50 | 0.50 | 0.11 | 0.11 | 0.50 | 0.11 | 0.11 | 0.50 |
| I, Upstream Filtering Factor | 1.00 | 1.00 | 1.00 | 1.00 | 1.00 | 1.00 | 1.00 | 1.00 | 1.00 | 1.00 | 1.00 | 1.00 |
| d2, Incremental Delay [s] | 15.14 | 1.43 | 10.06 | 13.45 | 3.95 | 7.89 | 5.33 | 3.32 | 18.01 | 11.92 | 1.08 | 3.99 |
| d3, Initial Queue Delay [s] | 0.00 | 0.00 | 0.00 | 0.00 | 0.00 | 0.00 | 0.00 | 0.00 | 0.00 | 0.00 | 0.00 | 0.00 |
| Rp, platoon ratio | 1.33 | 1.33 | 1.33 | 1.33 | 1.33 | 1.33 | 1.33 | 1.33 | 1.33 | 1.33 | 1.33 | 1.33 |
| PF, progression factor | 1.00 | 1.00 | 1.00 | 1.00 | 1.00 | 1.00 | 1.00 | 1.00 | 1.00 | 1.00 | 1.00 | 1.00 |

**Lane Group Results**

| | | | | | | | | | | | | |
|---|---|---|---|---|---|---|---|---|---|---|---|---|
| X, volume / capacity | 0.98 | 0.66 | 0.88 | 0.90 | 0.77 | 0.77 | 0.82 | 0.84 | 0.85 | 0.97 | 0.66 | 0.52 |
| d, Delay for Lane Group [s/veh] | 65.02 | 17.23 | 12.72 | 68.46 | 26.70 | 30.69 | 57.21 | 52.85 | 52.66 | 57.93 | 41.52 | 33.10 |
| Lane Group LOS | E | B | B | E | C | C | E | D | D | E | D | C |
| Critical Lane Group | No | No | Yes | Yes | No | No | No | No | Yes | Yes | No | No |
| 50th-Percentile Queue Length [veh] | 6.84 | 7.63 | 5.13 | 3.05 | 11.35 | 12.04 | 3.73 | 4.70 | 11.10 | 8.69 | 5.67 | 5.29 |
| 50th-Percentile Queue Length [ft] | 171.01 | 190.67 | 128.29 | 76.37 | 283.80 | 300.96 | 93.23 | 117.55 | 277.62 | 217.31 | 141.84 | 132.31 |
| 95th-Percentile Queue Length [veh] | 11.13 | 12.16 | 8.85 | 5.50 | 16.88 | 17.73 | 6.71 | 8.26 | 16.57 | 13.53 | 9.58 | 9.07 |
| 95th-Percentile Queue Length [ft] | 278.24 | 303.90 | 221.17 | 137.47 | 421.95 | 443.21 | 167.82 | 206.45 | 414.25 | 338.19 | 239.50 | 226.64 |

**Movement, Approach, & Intersection Results**

| | | | | | | | | | | | | |
|---|---|---|---|---|---|---|---|---|---|---|---|---|
| d_M, Delay for Movement [s/veh] | 65.02 | 17.23 | 12.72 | 68.46 | 27.63 | 30.69 | 57.21 | 52.85 | 52.66 | 57.93 | 41.52 | 33.10 |
| Movement LOS | E | B | B | E | C | C | E | D | D | E | D | C |
| d_A, Approach Delay [s/veh] | 22.52 | | | 32.01 | | | 53.75 | | | 47.23 | | |
| Approach LOS | C | | | C | | | D | | | D | | |
| d_I, Intersection Delay [s/veh] | 34.15 | | | | | | | | | | | |
| Intersection LOS | C | | | | | | | | | | | |
| Intersection V/C | 0.966 | | | | | | | | | | | |

## Sequence

| | | | | | | | | | | | | | | | | |
|---|---|---|---|---|---|---|---|---|---|---|---|---|---|---|---|---|
| Ring 1 | 1 | 2 | 3 | 4 | - | - | - | - | - | - | - | - | - | - | - | - |
| Ring 2 | 5 | 6 | 7 | 8 | - | - | - | - | - | - | - | - | - | - | - | - |
| Ring 3 | - | - | - | - | - | - | - | - | - | - | - | - | - | - | - | - |
| Ring 4 | - | - | - | - | - | - | - | - | - | - | - | - | - | - | - | - |

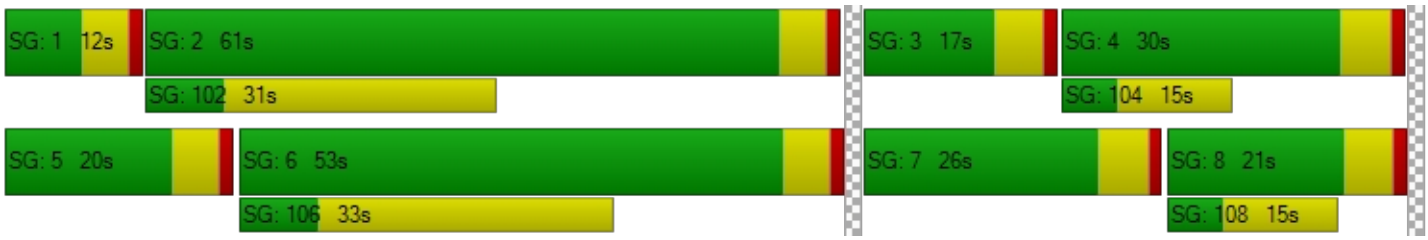

**Intersection Level Of Service Report**
**Intersection 4: Sierra Ave (NS) / Slover Ave (EW)**

| | | | |
|---|---|---|---|
| Control Type: | Signalized | Delay (sec / veh): | 35.0 |
| Analysis Method: | HCM 2010 | Level Of Service: | C |
| Analysis Period: | 15 minutes | Volume to Capacity (v/c): | 0.710 |

**Intersection Setup**

| Name | Sierra Avenue | | | Sierra Avenue | | | Slover Avenue | | | Slover Avenue | | |
|---|---|---|---|---|---|---|---|---|---|---|---|---|
| Approach | Northbound | | | Southbound | | | Eastbound | | | Westbound | | |
| Lane Configuration | | | | | | | | | | | | |
| Turning Movement | Left | Thru | Right | Left | Thru | Right | Left | Thru | Right | Left | Thru | Right |
| Lane Width [ft] | 12.00 | 12.00 | 12.00 | 12.00 | 12.00 | 12.00 | 12.00 | 12.00 | 12.00 | 12.00 | 12.00 | 12.00 |
| No. of Lanes in Pocket | 2 | 0 | 0 | 2 | 0 | 0 | 2 | 0 | 1 | 2 | 0 | 1 |
| Pocket Length [ft] | 195.00 | 100.00 | 100.00 | 615.00 | 100.00 | 100.00 | 290.00 | 100.00 | 290.00 | 230.00 | 100.00 | 300.00 |
| Speed [mph] | 50.00 | | | 40.00 | | | 45.00 | | | 45.00 | | |
| Grade [%] | 0.00 | | | 0.00 | | | 0.00 | | | 0.00 | | |
| Crosswalk | Yes | | | Yes | | | Yes | | | Yes | | |

**volumes**

| Name | Sierra Avenue | | | Sierra Avenue | | | Slover Avenue | | | Slover Avenue | | |
|---|---|---|---|---|---|---|---|---|---|---|---|---|
| Base Volume Input [veh/h] | 258 | 1051 | 261 | 527 | 983 | 150 | 311 | 580 | 188 | 336 | 403 | 691 |
| Base Volume Adjustment Factor | 1.0000 | 1.0000 | 1.0000 | 1.0000 | 1.0000 | 1.0000 | 1.0000 | 1.0000 | 1.0000 | 1.0000 | 1.0000 | 1.0000 |
| Heavy Vehicles Percentage [%] | 2.00 | 2.00 | 2.00 | 2.00 | 2.00 | 2.00 | 2.00 | 2.00 | 2.00 | 2.00 | 2.00 | 2.00 |
| Growth Rate | 1.00 | 1.00 | 1.00 | 1.00 | 1.00 | 1.00 | 1.00 | 1.00 | 1.00 | 1.00 | 1.00 | 1.00 |
| In-Process Volume [veh/h] | 0 | 0 | 0 | 0 | 0 | 0 | 0 | 0 | 0 | 0 | 0 | 0 |
| Site-Generated Trips [veh/h] | 0 | 0 | 0 | 0 | 0 | 0 | 0 | 0 | 0 | 0 | 0 | 0 |
| Diverted Trips [veh/h] | 0 | 0 | 0 | 0 | 0 | 0 | 0 | 0 | 0 | 0 | 0 | 0 |
| Pass-by Trips [veh/h] | 0 | 0 | 0 | 0 | 0 | 0 | 0 | 0 | 0 | 0 | 0 | 0 |
| Existing Site Adjustment Volume [veh/h] | 0 | 0 | 0 | 0 | 0 | 0 | 0 | 0 | 0 | 0 | 0 | 0 |
| Other Volume [veh/h] | 0 | 0 | 0 | 0 | 0 | 0 | 0 | 0 | 0 | 0 | 0 | 0 |
| Right-Turn on Red Volume [veh/h] | 0 | 0 | 0 | 0 | 0 | 0 | 0 | 0 | 0 | 0 | 0 | 0 |
| Total Hourly Volume [veh/h] | 258 | 1051 | 261 | 527 | 983 | 150 | 311 | 580 | 188 | 336 | 403 | 691 |
| Peak Hour Factor | 0.9580 | 0.9580 | 0.9580 | 0.9580 | 0.9580 | 0.9580 | 0.9580 | 0.9580 | 0.9580 | 0.9580 | 0.9580 | 0.9580 |
| Other Adjustment Factor | 1.0000 | 1.0000 | 1.0000 | 1.0000 | 1.0000 | 1.0000 | 1.0000 | 1.0000 | 1.0000 | 1.0000 | 1.0000 | 1.0000 |
| Total 15-Minute Volume [veh/h] | 67 | 274 | 68 | 138 | 257 | 39 | 81 | 151 | 49 | 88 | 105 | 180 |
| Total Analysis Volume [veh/h] | 269 | 1097 | 272 | 550 | 1026 | 157 | 325 | 605 | 196 | 351 | 421 | 721 |
| Presence of On-Street Parking | No | | No | No | | No | No | | No | No | | No |
| On-Street Parking Maneuver Rate [/h] | 0 | 0 | 0 | 0 | 0 | 0 | 0 | 0 | 0 | 0 | 0 | 0 |
| Local Bus Stopping Rate [/h] | 0 | 0 | 0 | 0 | 0 | 0 | 0 | 0 | 0 | 0 | 0 | 0 |
| Pedestrian Volume [ped/h] | 0 | | | 0 | | | 0 | | | 0 | | |
| Bicycle Volume [bicycles/h] | 0 | | | 0 | | | 0 | | | 0 | | |

**Intersection Settings**

| | |
|---|---|
| Located in CBD | No |
| Signal Coordination Group | 1 - NS - Sierra |
| Cycle Length [s] | 120 |
| Coordination Type | Time of Day Pattern Coordinated |
| Actuation Type | Fully actuated |
| Offset [s] | 12.0 |
| Offset Reference | LagFO |
| Permissive Mode | SingleBand |
| Lost time [s] | 16.00 |

**Phasing & Timing**

| Control Type | Protecte | Permiss | Overlap | Protecte | Permiss | Overlap | Protecte | Permiss | Overlap | Protecte | Permiss | Overlap |
|---|---|---|---|---|---|---|---|---|---|---|---|---|
| Signal group | 5 | 2 | 2 | 1 | 6 | 6 | 3 | 8 | 8 | 7 | 4 | 4 |
| Auxiliary Signal Groups | | | 2,7 | | | 3,6 | | | 5,8 | | | 1,4 |
| Lead / Lag | Lead | - | - | Lead | - | - | Lead | - | - | Lead | - | - |
| Minimum Green [s] | 5 | 5 | 5 | 5 | 5 | 5 | 5 | 5 | 5 | 5 | 5 | 5 |
| Maximum Green [s] | 30 | 30 | 30 | 30 | 30 | 30 | 30 | 30 | 30 | 30 | 30 | 30 |
| Amber [s] | 5.2 | 5.2 | 5.2 | 4.4 | 4.4 | 4.4 | 4.8 | 4.8 | 4.8 | 4.8 | 4.8 | 4.8 |
| All red [s] | 1.0 | 1.0 | 1.0 | 1.0 | 1.0 | 1.0 | 1.0 | 1.0 | 1.0 | 1.0 | 1.0 | 1.0 |
| Split [s] | 19 | 42 | 42 | 31 | 54 | 54 | 20 | 26 | 26 | 21 | 27 | 27 |
| Vehicle Extension [s] | 3.0 | 3.0 | 3.0 | 3.0 | 3.0 | 3.0 | 3.0 | 3.0 | 3.0 | 3.0 | 3.0 | 3.0 |
| Walk [s] | 0 | 7 | 7 | 0 | 7 | 7 | 0 | 5 | 5 | 0 | 5 | 5 |
| Pedestrian Clearance [s] | 0 | 22 | 22 | 0 | 20 | 20 | 0 | 10 | 10 | 0 | 10 | 10 |
| I1, Start-Up Lost Time [s] | 2.0 | 2.0 | 2.0 | 2.0 | 2.0 | 2.0 | 2.0 | 2.0 | 2.0 | 2.0 | 2.0 | 2.0 |
| I2, Clearance Lost Time [s] | 4.2 | 4.2 | 4.2 | 3.4 | 3.4 | 3.4 | 3.8 | 3.8 | 3.8 | 3.8 | 3.8 | 3.8 |
| Minimum Recall | No | No | No | No | No | No | No | No | No | No | No | No |
| Maximum Recall | No | No | No | No | No | No | No | No | No | No | No | No |
| Pedestrian Recall | No | No | No | No | No | No | No | No | No | No | No | No |
| Detector Location [ft] | 0.0 | 0.0 | 0.0 | 0.0 | 0.0 | 0.0 | 0.0 | 0.0 | 0.0 | 0.0 | 0.0 | 0.0 |
| Detector Length [ft] | 0.0 | 0.0 | 0.0 | 0.0 | 0.0 | 0.0 | 0.0 | 0.0 | 0.0 | 0.0 | 0.0 | 0.0 |
| I, Upstream Filtering Factor | 1.00 | 1.00 | 1.00 | 1.00 | 1.00 | 1.00 | 1.00 | 1.00 | 1.00 | 1.00 | 1.00 | 1.00 |

**Exclusive Pedestrian Phase**

| | |
|---|---|
| Pedestrian Signal Group | 0 |
| Pedestrian Walk [s] | 0 |
| Pedestrian Clearance [s] | 0 |

**Lane Group Calculations**

| Lane Group | L | C | R | L | C | R | L | C | R | L | C | R |
|---|---|---|---|---|---|---|---|---|---|---|---|---|
| L, Total Lost Time per Cycle [s] | 6.20 | 6.20 | 5.80 | 5.40 | 5.40 | 5.80 | 5.80 | 5.80 | 6.20 | 5.80 | 5.80 | 5.40 |
| l1_p, Permitted Start-Up Lost Time [s] | 0.00 | 0.00 | 0.00 | 0.00 | 0.00 | 0.00 | 0.00 | 0.00 | 0.00 | 0.00 | 0.00 | 0.00 |
| l2, Clearance Lost Time [s] | 4.20 | 4.20 | 0.00 | 3.40 | 3.40 | 0.00 | 3.80 | 3.80 | 0.00 | 3.80 | 3.80 | 0.00 |
| g_i, Effective Green Time [s] | 13 | 41 | 61 | 25 | 53 | 71 | 13 | 17 | 36 | 14 | 18 | 49 |
| g / C, Green / Cycle | 0.11 | 0.34 | 0.51 | 0.21 | 0.44 | 0.59 | 0.11 | 0.14 | 0.30 | 0.12 | 0.15 | 0.41 |
| (v / s)_i Volume / Saturation Flow Rate | 0.08 | 0.16 | 0.17 | 0.16 | 0.20 | 0.10 | 0.09 | 0.12 | 0.12 | 0.10 | 0.12 | 0.26 |
| s, saturation flow rate [veh/h] | 3445 | 6765 | 1583 | 3445 | 5074 | 1583 | 3445 | 5074 | 1583 | 3445 | 3547 | 2803 |
| c, Capacity [veh/h] | 371 | 2293 | 808 | 708 | 2216 | 939 | 384 | 723 | 472 | 414 | 536 | 1135 |
| d1, Uniform Delay [s] | 49.77 | 25.51 | 10.75 | 41.08 | 17.04 | 5.41 | 52.38 | 50.17 | 33.76 | 51.80 | 49.14 | 28.66 |
| k, delay calibration | 0.11 | 0.50 | 0.50 | 0.11 | 0.50 | 0.24 | 0.11 | 0.11 | 0.40 | 0.11 | 0.11 | 0.13 |
| I, Upstream Filtering Factor | 1.00 | 1.00 | 1.00 | 1.00 | 1.00 | 1.00 | 1.00 | 1.00 | 1.00 | 1.00 | 1.00 | 1.00 |
| d2, Incremental Delay [s] | 2.71 | 0.72 | 1.12 | 1.88 | 0.70 | 0.18 | 5.19 | 2.66 | 2.16 | 4.91 | 2.59 | 0.74 |
| d3, Initial Queue Delay [s] | 0.00 | 0.00 | 0.00 | 0.00 | 0.00 | 0.00 | 0.00 | 0.00 | 0.00 | 0.00 | 0.00 | 0.00 |
| Rp, platoon ratio | 1.33 | 1.33 | 1.33 | 1.33 | 1.33 | 1.33 | 1.00 | 1.00 | 1.00 | 1.00 | 1.00 | 1.00 |
| PF, progression factor | 1.00 | 1.00 | 1.00 | 1.00 | 1.00 | 1.00 | 1.00 | 1.00 | 1.00 | 1.00 | 1.00 | 1.00 |

**Lane Group Results**

| | | | | | | | | | | | | |
|---|---|---|---|---|---|---|---|---|---|---|---|---|
| X, volume / capacity | 0.73 | 0.48 | 0.34 | 0.78 | 0.46 | 0.17 | 0.85 | 0.84 | 0.41 | 0.85 | 0.79 | 0.64 |
| d, Delay for Lane Group [s/veh] | 52.48 | 26.23 | 11.88 | 42.96 | 17.73 | 5.59 | 57.57 | 52.83 | 35.92 | 56.71 | 51.73 | 29.39 |
| Lane Group LOS | D | C | B | D | B | A | E | D | D | E | D | C |
| Critical Lane Group | No | Yes | No | Yes | No | No | Yes | No | No | No | No | Yes |
| 50th-Percentile Queue Length [veh] | 3.77 | 4.92 | 2.77 | 7.08 | 4.74 | 0.92 | 4.96 | 5.91 | 4.72 | 5.32 | 6.10 | 8.01 |
| 50th-Percentile Queue Length [ft] | 94.19 | 122.97 | 69.24 | 177.04 | 118.58 | 22.93 | 123.96 | 147.74 | 118.05 | 133.11 | 152.56 | 200.16 |
| 95th-Percentile Queue Length [veh] | 6.78 | 8.56 | 4.99 | 11.45 | 8.31 | 1.65 | 8.61 | 9.90 | 8.29 | 9.11 | 10.15 | 12.65 |
| 95th-Percentile Queue Length [ft] | 169.54 | 213.91 | 124.64 | 286.14 | 207.87 | 41.27 | 215.26 | 247.40 | 207.14 | 227.72 | 253.85 | 316.17 |

**Movement, Approach, & Intersection Results**

| | | | | | | | | | | | | |
|---|---|---|---|---|---|---|---|---|---|---|---|---|
| d_M, Delay for Movement [s/veh] | 52.48 | 26.23 | 11.88 | 42.96 | 17.73 | 5.59 | 57.57 | 52.83 | 35.92 | 56.71 | 51.73 | 29.39 |
| Movement LOS | D | C | B | D | B | A | E | D | D | E | D | C |
| d_A, Approach Delay [s/veh] | 28.16 | | | 24.64 | | | 51.26 | | | 42.11 | | |
| Approach LOS | C | | | C | | | D | | | D | | |
| d_I, Intersection Delay [s/veh] | 34.96 | | | | | | | | | | | |
| Intersection LOS | C | | | | | | | | | | | |
| Intersection V/C | 0.710 | | | | | | | | | | | |

## Sequence

| | | | | | | | | | | | | | | | | |
|---|---|---|---|---|---|---|---|---|---|---|---|---|---|---|---|---|
| Ring 1 | 1 | 2 | 3 | 4 | - | - | - | - | - | - | - | - | - | - | - | - |
| Ring 2 | 5 | 6 | 7 | 8 | - | - | - | - | - | - | - | - | - | - | - | - |
| Ring 3 | - | - | - | - | - | - | - | - | - | - | - | - | - | - | - | - |
| Ring 4 | - | - | - | - | - | - | - | - | - | - | - | - | - | - | - | - |

**Intersection Level Of Service Report**
**Intersection 7: Alder Ave (NS) / Marygold Ave (EW)**

| | | | |
|---|---|---|---|
| Control Type: | Signalized | Delay (sec / veh): | 19.2 |
| Analysis Method: | HCM 2010 | Level Of Service: | B |
| Analysis Period: | 15 minutes | Volume to Capacity (v/c): | 0.810 |

**Intersection Setup**

| Name | Alder Avenue | | | Alder Avenue | | | Marygold Avenue | | | Marygold Avenue | | |
|---|---|---|---|---|---|---|---|---|---|---|---|---|
| Approach | Northbound | | | Southbound | | | Eastbound | | | Westbound | | |
| Lane Configuration | | | | | | | | | | | | |
| Turning Movement | Left | Thru | Right | Left | Thru | Right | Left | Thru | Right | Left | Thru | Right |
| Lane Width [ft] | 12.00 | 12.00 | 12.00 | 12.00 | 12.00 | 12.00 | 12.00 | 12.00 | 12.00 | 12.00 | 12.00 | 12.00 |
| No. of Lanes in Pocket | 0 | 0 | 1 | 0 | 0 | 0 | 0 | 0 | 0 | 0 | 0 | 0 |
| Pocket Length [ft] | 100.00 | 100.00 | 200.00 | 100.00 | 100.00 | 100.00 | 100.00 | 100.00 | 100.00 | 100.00 | 100.00 | 100.00 |
| Speed [mph] | 40.00 | | | 40.00 | | | 35.00 | | | 25.00 | | |
| Grade [%] | 0.00 | | | 0.00 | | | 0.00 | | | 0.00 | | |
| Crosswalk | Yes | | | Yes | | | Yes | | | Yes | | |

**volumes**

| Name | Alder Avenue | | | Alder Avenue | | | Marygold Avenue | | | Marygold Avenue | | |
|---|---|---|---|---|---|---|---|---|---|---|---|---|
| Base Volume Input [veh/h] | 55 | 734 | 48 | 23 | 481 | 106 | 190 | 57 | 33 | 22 | 19 | 6 |
| Base Volume Adjustment Factor | 1.0000 | 1.0000 | 1.0000 | 1.0000 | 1.0000 | 1.0000 | 1.0000 | 1.0000 | 1.0000 | 1.0000 | 1.0000 | 1.0000 |
| Heavy Vehicles Percentage [%] | 2.00 | 2.00 | 2.00 | 2.00 | 2.00 | 2.00 | 2.00 | 2.00 | 2.00 | 2.00 | 2.00 | 2.00 |
| Growth Rate | 1.00 | 1.00 | 1.00 | 1.00 | 1.00 | 1.00 | 1.00 | 1.00 | 1.00 | 1.00 | 1.00 | 1.00 |
| In-Process Volume [veh/h] | 0 | 0 | 0 | 0 | 0 | 0 | 0 | 0 | 0 | 0 | 0 | 0 |
| Site-Generated Trips [veh/h] | 0 | 0 | 0 | 0 | 0 | 0 | 0 | 0 | 0 | 0 | 0 | 0 |
| Diverted Trips [veh/h] | 0 | 0 | 0 | 0 | 0 | 0 | 0 | 0 | 0 | 0 | 0 | 0 |
| Pass-by Trips [veh/h] | 0 | 0 | 0 | 0 | 0 | 0 | 0 | 0 | 0 | 0 | 0 | 0 |
| Existing Site Adjustment Volume [veh/h] | 0 | 0 | 0 | 0 | 0 | 0 | 0 | 0 | 0 | 0 | 0 | 0 |
| Other Volume [veh/h] | 0 | 0 | 0 | 0 | 0 | 0 | 0 | 0 | 0 | 0 | 0 | 0 |
| Right-Turn on Red Volume [veh/h] | 0 | 0 | 0 | 0 | 0 | 0 | 0 | 0 | 0 | 0 | 0 | 0 |
| Total Hourly Volume [veh/h] | 55 | 734 | 48 | 23 | 481 | 106 | 190 | 57 | 33 | 22 | 19 | 6 |
| Peak Hour Factor | 0.9220 | 0.9220 | 0.9220 | 0.9220 | 0.9220 | 0.9220 | 0.9220 | 0.9220 | 0.9220 | 0.9220 | 0.9220 | 0.9220 |
| Other Adjustment Factor | 1.0000 | 1.0000 | 1.0000 | 1.0000 | 1.0000 | 1.0000 | 1.0000 | 1.0000 | 1.0000 | 1.0000 | 1.0000 | 1.0000 |
| Total 15-Minute Volume [veh/h] | 15 | 199 | 13 | 6 | 130 | 29 | 52 | 15 | 9 | 6 | 5 | 2 |
| Total Analysis Volume [veh/h] | 60 | 796 | 52 | 25 | 522 | 115 | 206 | 62 | 36 | 24 | 21 | 7 |
| Presence of On-Street Parking | No | | No | No | | No | No | | No | No | | No |
| On-Street Parking Maneuver Rate [/h] | 0 | 0 | 0 | 0 | 0 | 0 | 0 | 0 | 0 | 0 | 0 | 0 |
| Local Bus Stopping Rate [/h] | 0 | 0 | 0 | 0 | 0 | 0 | 0 | 0 | 0 | 0 | 0 | 0 |
| Pedestrian Volume [ped/h] | 0 | | | 0 | | | 0 | | | 0 | | |
| Bicycle Volume [bicycles/h] | 0 | | | 0 | | | 0 | | | 0 | | |

**Intersection Settings**

| | |
|---|---|
| Located in CBD | Yes |
| Signal Coordination Group | - |
| Cycle Length [s] | 100 |
| Coordination Type | Time of Day Pattern Isolated |
| Actuation Type | Fully actuated |
| Offset [s] | 0.0 |
| Offset Reference | LeadGreen |
| Permissive Mode | SingleBand |
| Lost time [s] | 8.00 |

**Phasing & Timing**

| Control Type | Permiss | Permiss | Permiss | Permiss | Permiss | Permiss | Permiss | Permiss | Permiss | Permiss | Permiss | Permiss |
|---|---|---|---|---|---|---|---|---|---|---|---|---|
| Signal group | 0 | 2 | 0 | 0 | 6 | 0 | 0 | 8 | 0 | 0 | 4 | 0 |
| Auxiliary Signal Groups | | | | | | | | | | | | |
| Lead / Lag | - | - | - | - | - | - | - | - | - | - | - | - |
| Minimum Green [s] | 0 | 5 | 0 | 0 | 5 | 0 | 0 | 5 | 0 | 0 | 5 | 0 |
| Maximum Green [s] | 0 | 30 | 0 | 0 | 30 | 0 | 0 | 30 | 0 | 0 | 30 | 0 |
| Amber [s] | 0.0 | 3.0 | 0.0 | 0.0 | 3.0 | 0.0 | 0.0 | 3.0 | 0.0 | 0.0 | 3.0 | 0.0 |
| All red [s] | 0.0 | 1.0 | 0.0 | 0.0 | 1.0 | 0.0 | 0.0 | 1.0 | 0.0 | 0.0 | 1.0 | 0.0 |
| Split [s] | 0 | 51 | 0 | 0 | 51 | 0 | 0 | 49 | 0 | 0 | 49 | 0 |
| Vehicle Extension [s] | 0.0 | 3.0 | 0.0 | 0.0 | 3.0 | 0.0 | 0.0 | 3.0 | 0.0 | 0.0 | 3.0 | 0.0 |
| Walk [s] | 0 | 5 | 0 | 0 | 5 | 0 | 0 | 5 | 0 | 0 | 5 | 0 |
| Pedestrian Clearance [s] | 0 | 10 | 0 | 0 | 10 | 0 | 0 | 10 | 0 | 0 | 10 | 0 |
| I1, Start-Up Lost Time [s] | 0.0 | 2.0 | 0.0 | 0.0 | 2.0 | 0.0 | 0.0 | 2.0 | 0.0 | 0.0 | 2.0 | 0.0 |
| I2, Clearance Lost Time [s] | 0.0 | 2.0 | 0.0 | 0.0 | 2.0 | 0.0 | 0.0 | 2.0 | 0.0 | 0.0 | 2.0 | 0.0 |
| Minimum Recall | | No | | | No | | | No | | | No | |
| Maximum Recall | | No | | | No | | | No | | | No | |
| Pedestrian Recall | | No | | | No | | | No | | | No | |
| Detector Location [ft] | 0.0 | 0.0 | 0.0 | 0.0 | 0.0 | 0.0 | 0.0 | 0.0 | 0.0 | 0.0 | 0.0 | 0.0 |
| Detector Length [ft] | 0.0 | 0.0 | 0.0 | 0.0 | 0.0 | 0.0 | 0.0 | 0.0 | 0.0 | 0.0 | 0.0 | 0.0 |
| I, Upstream Filtering Factor | 1.00 | 1.00 | 1.00 | 1.00 | 1.00 | 1.00 | 1.00 | 1.00 | 1.00 | 1.00 | 1.00 | 1.00 |

**Exclusive Pedestrian Phase**

| | |
|---|---|
| Pedestrian Signal Group | 0 |
| Pedestrian Walk [s] | 0 |
| Pedestrian Clearance [s] | 0 |

**Lane Group Calculations**

| Lane Group | L | C | L | C | C | C |
|---|---|---|---|---|---|---|
| L, Total Lost Time per Cycle [s] | 4.00 | 4.00 | 4.00 | 4.00 | 4.00 | 4.00 |
| l1_p, Permitted Start-Up Lost Time [s] | 2.00 | 0.00 | 2.00 | 0.00 | 2.00 | 2.00 |
| l2, Clearance Lost Time [s] | 2.00 | 2.00 | 2.00 | 2.00 | 2.00 | 2.00 |
| g_i, Effective Green Time [s] | 66 | 66 | 66 | 66 | 26 | 26 |
| g / C, Green / Cycle | 0.66 | 0.66 | 0.66 | 0.66 | 0.26 | 0.26 |
| (v / s)_i Volume / Saturation Flow Rate | 0.08 | 0.51 | 0.04 | 0.39 | 0.23 | 0.04 |
| s, saturation flow rate [veh/h] | 709 | 1659 | 582 | 1625 | 1297 | 1398 |
| c, Capacity [veh/h] | 377 | 1102 | 246 | 1080 | 392 | 410 |
| d1, Uniform Delay [s] | 17.71 | 11.50 | 25.71 | 9.24 | 36.45 | 28.60 |
| k, delay calibration | 0.50 | 0.50 | 0.50 | 0.50 | 0.11 | 0.11 |
| I, Upstream Filtering Factor | 1.00 | 1.00 | 1.00 | 1.00 | 1.00 | 1.00 |
| d2, Incremental Delay [s] | 0.90 | 5.19 | 0.83 | 2.37 | 3.33 | 0.14 |
| d3, Initial Queue Delay [s] | 0.00 | 0.00 | 0.00 | 0.00 | 0.00 | 0.00 |
| Rp, platoon ratio | 1.00 | 1.00 | 1.00 | 1.00 | 1.00 | 1.00 |
| PF, progression factor | 1.00 | 1.00 | 1.00 | 1.00 | 1.00 | 1.00 |

**Lane Group Results**

| | | | | | | |
|---|---|---|---|---|---|---|
| X, volume / capacity | 0.16 | 0.77 | 0.10 | 0.59 | 0.78 | 0.13 |
| d, Delay for Lane Group [s/veh] | 18.61 | 16.69 | 26.53 | 11.61 | 39.78 | 28.74 |
| Lane Group LOS | B | B | C | B | D | C |
| Critical Lane Group | No | Yes | No | No | Yes | No |
| 50th-Percentile Queue Length [veh] | 0.91 | 11.96 | 0.48 | 6.97 | 7.35 | 0.98 |
| 50th-Percentile Queue Length [ft] | 22.81 | 299.04 | 11.96 | 174.36 | 183.73 | 24.57 |
| 95th-Percentile Queue Length [veh] | 1.64 | 17.63 | 0.86 | 11.31 | 11.79 | 1.77 |
| 95th-Percentile Queue Length [ft] | 41.06 | 440.84 | 21.52 | 282.63 | 294.87 | 44.23 |

**Movement, Approach, & Intersection Results**

| | | | | | | | | | | | | |
|---|---|---|---|---|---|---|---|---|---|---|---|---|
| d_M, Delay for Movement [s/veh] | 18.61 | 16.69 | 16.69 | 26.53 | 11.61 | 11.61 | 39.78 | 39.78 | 39.78 | 28.74 | 28.74 | 28.74 |
| Movement LOS | B | B | B | C | B | B | D | D | D | C | C | C |
| d_A, Approach Delay [s/veh] | 16.81 | | | 12.17 | | | 39.78 | | | 28.74 | | |
| Approach LOS | B | | | B | | | D | | | C | | |
| d_I, Intersection Delay [s/veh] | 19.16 | | | | | | | | | | | |
| Intersection LOS | B | | | | | | | | | | | |
| Intersection V/C | 0.810 | | | | | | | | | | | |

## Sequence

| | | | | | | | | | | | | | | | | |
|---|---|---|---|---|---|---|---|---|---|---|---|---|---|---|---|---|
| Ring 1 | 2 | 4 | - | - | - | - | - | - | - | - | - | - | - | - | - | - |
| Ring 2 | 6 | 8 | - | - | - | - | - | - | - | - | - | - | - | - | - | - |
| Ring 3 | - | - | - | - | - | - | - | - | - | - | - | - | - | - | - | - |
| Ring 4 | - | - | - | - | - | - | - | - | - | - | - | - | - | - | - | - |

**Intersection Level Of Service Report**
**Intersection 8: Alder Ave (NS) / Valley Blvd (EW)**

| | | | |
|---|---|---|---|
| Control Type: | Signalized | Delay (sec / veh): | 33.7 |
| Analysis Method: | HCM 2010 | Level Of Service: | C |
| Analysis Period: | 15 minutes | Volume to Capacity (v/c): | 0.600 |

**Intersection Setup**

| Name | Alder Avenue | | | Alder Avenue | | | Valley Boulevard | | | | | |
|---|---|---|---|---|---|---|---|---|---|---|---|---|
| Approach | Northbound | | | Southbound | | | Eastbound | | | Westbound | | |
| Lane Configuration | | | | | | | | | | | | |
| Turning Movement | Left | Thru | Right | Left | Thru | Right | Left | Thru | Right | Left | Thru | Right |
| Lane Width [ft] | 12.00 | 12.00 | 12.00 | 12.00 | 12.00 | 12.00 | 12.00 | 12.00 | 12.00 | 12.00 | 12.00 | 12.00 |
| No. of Lanes in Pocket | 0 | 0 | 1 | 0 | 0 | 0 | 1 | 0 | 0 | 1 | 0 | 0 |
| Pocket Length [ft] | 100.00 | 100.00 | 55.00 | 100.00 | 100.00 | 100.00 | 100.00 | 100.00 | 100.00 | 100.00 | 100.00 | 100.00 |
| Speed [mph] | 40.00 | | | 40.00 | | | 40.00 | | | 30.00 | | |
| Grade [%] | 0.00 | | | 0.00 | | | 0.00 | | | 0.00 | | |
| Crosswalk | Yes | | | Yes | | | Yes | | | Yes | | |

**volumes**

| Name | Alder Avenue | | | Alder Avenue | | | Valley Boulevard | | | | | |
|---|---|---|---|---|---|---|---|---|---|---|---|---|
| Base Volume Input [veh/h] | 429 | 432 | 269 | 160 | 295 | 45 | 174 | 470 | 396 | 147 | 405 | 215 |
| Base Volume Adjustment Factor | 1.0000 | 1.0000 | 1.0000 | 1.0000 | 1.0000 | 1.0000 | 1.0000 | 1.0000 | 1.0000 | 1.0000 | 1.0000 | 1.0000 |
| Heavy Vehicles Percentage [%] | 2.00 | 2.00 | 2.00 | 2.00 | 2.00 | 2.00 | 4.00 | 4.00 | 4.00 | 4.00 | 4.00 | 4.00 |
| Growth Rate | 1.00 | 1.00 | 1.00 | 1.00 | 1.00 | 1.00 | 1.00 | 1.00 | 1.00 | 1.00 | 1.00 | 1.00 |
| In-Process Volume [veh/h] | 0 | 0 | 0 | 0 | 0 | 0 | 0 | 0 | 0 | 0 | 0 | 0 |
| Site-Generated Trips [veh/h] | 0 | 0 | 0 | 0 | 0 | 0 | 0 | 0 | 0 | 0 | 0 | 0 |
| Diverted Trips [veh/h] | 0 | 0 | 0 | 0 | 0 | 0 | 0 | 0 | 0 | 0 | 0 | 0 |
| Pass-by Trips [veh/h] | 0 | 0 | 0 | 0 | 0 | 0 | 0 | 0 | 0 | 0 | 0 | 0 |
| Existing Site Adjustment Volume [veh/h] | 0 | 0 | 0 | 0 | 0 | 0 | 0 | 0 | 0 | 0 | 0 | 0 |
| Other Volume [veh/h] | 0 | 0 | 0 | 0 | 0 | 0 | 0 | 0 | 0 | 0 | 0 | 0 |
| Right-Turn on Red Volume [veh/h] | 0 | 0 | 0 | 0 | 0 | 0 | 0 | 0 | 0 | 0 | 0 | 0 |
| Total Hourly Volume [veh/h] | 429 | 432 | 269 | 160 | 295 | 45 | 174 | 470 | 396 | 147 | 405 | 215 |
| Peak Hour Factor | 0.8890 | 0.8890 | 0.8890 | 0.8890 | 0.8890 | 0.8890 | 0.8890 | 0.8890 | 0.8890 | 0.8890 | 0.8890 | 0.8890 |
| Other Adjustment Factor | 1.0000 | 1.0000 | 1.0000 | 1.0000 | 1.0000 | 1.0000 | 1.0000 | 1.0000 | 1.0000 | 1.0000 | 1.0000 | 1.0000 |
| Total 15-Minute Volume [veh/h] | 121 | 121 | 76 | 45 | 83 | 13 | 49 | 132 | 111 | 41 | 114 | 60 |
| Total Analysis Volume [veh/h] | 483 | 486 | 303 | 180 | 332 | 51 | 196 | 529 | 445 | 165 | 456 | 242 |
| Presence of On-Street Parking | No | | No | No | | No | No | | No | No | | No |
| On-Street Parking Maneuver Rate [/h] | 0 | 0 | 0 | 0 | 0 | 0 | 0 | 0 | 0 | 0 | 0 | 0 |
| Local Bus Stopping Rate [/h] | 0 | 0 | 0 | 0 | 0 | 0 | 0 | 0 | 0 | 0 | 0 | 0 |
| Pedestrian Volume [ped/h] | 0 | | | 0 | | | 0 | | | 0 | | |
| Bicycle Volume [bicycles/h] | 0 | | | 0 | | | 0 | | | 0 | | |

**Intersection Settings**

| | |
|---|---|
| Located in CBD | No |
| Signal Coordination Group | 3 - EW - Valley |
| Cycle Length [s] | 120 |
| Coordination Type | Time of Day Pattern Coordinated |
| Actuation Type | Fully actuated |
| Offset [s] | 44.0 |
| Offset Reference | LagFO |
| Permissive Mode | SingleBand |
| Lost time [s] | 16.00 |

**Phasing & Timing**

| Control Type | Protecte | Permiss | Overlap | Protecte | Permiss | Overlap | Protecte | Permiss | Overlap | Protecte | Permiss | Permiss |
|---|---|---|---|---|---|---|---|---|---|---|---|---|
| Signal group | 5 | 2 | 2 | 1 | 6 | 6 | 3 | 8 | 8 | 7 | 4 | 4 |
| Auxiliary Signal Groups | | | 2,7 | | | 3,6 | | | 5,8 | | | 1,4 |
| Lead / Lag | Lead | - | - | Lead | - | - | Lead | - | - | Lead | - | - |
| Minimum Green [s] | 5 | 5 | 5 | 5 | 5 | 5 | 5 | 5 | 5 | 5 | 5 | 5 |
| Maximum Green [s] | 30 | 30 | 30 | 30 | 30 | 30 | 30 | 30 | 30 | 30 | 30 | 30 |
| Amber [s] | 3.0 | 3.0 | 3.0 | 3.0 | 3.0 | 3.0 | 3.0 | 3.0 | 3.0 | 3.0 | 3.0 | 3.0 |
| All red [s] | 1.0 | 1.0 | 1.0 | 1.0 | 1.0 | 1.0 | 1.0 | 1.0 | 1.0 | 1.0 | 1.0 | 1.0 |
| Split [s] | 33 | 19 | 19 | 40 | 26 | 26 | 15 | 24 | 24 | 37 | 46 | 46 |
| Vehicle Extension [s] | 3.0 | 3.0 | 3.0 | 3.0 | 3.0 | 3.0 | 3.0 | 3.0 | 3.0 | 3.0 | 3.0 | 3.0 |
| Walk [s] | 0 | 5 | 5 | 0 | 5 | 5 | 0 | 5 | 5 | 0 | 5 | 5 |
| Pedestrian Clearance [s] | 0 | 10 | 10 | 0 | 10 | 10 | 0 | 10 | 10 | 0 | 10 | 10 |
| I1, Start-Up Lost Time [s] | 2.0 | 2.0 | 2.0 | 2.0 | 2.0 | 2.0 | 2.0 | 2.0 | 2.0 | 2.0 | 2.0 | 2.0 |
| I2, Clearance Lost Time [s] | 2.0 | 2.0 | 2.0 | 2.0 | 2.0 | 2.0 | 2.0 | 2.0 | 2.0 | 2.0 | 2.0 | 2.0 |
| Minimum Recall | No | No | No | No | No | No | No | No | No | No | No | |
| Maximum Recall | No | No | No | No | No | No | No | No | No | No | No | |
| Pedestrian Recall | No | No | No | No | No | No | No | No | No | No | No | |
| Detector Location [ft] | 0.0 | 0.0 | 0.0 | 0.0 | 0.0 | 0.0 | 0.0 | 0.0 | 0.0 | 0.0 | 0.0 | 0.0 |
| Detector Length [ft] | 0.0 | 0.0 | 0.0 | 0.0 | 0.0 | 0.0 | 0.0 | 0.0 | 0.0 | 0.0 | 0.0 | 0.0 |
| I, Upstream Filtering Factor | 1.00 | 1.00 | 1.00 | 1.00 | 1.00 | 1.00 | 1.00 | 1.00 | 1.00 | 1.00 | 1.00 | 1.00 |

**Exclusive Pedestrian Phase**

| | |
|---|---|
| Pedestrian Signal Group | 0 |
| Pedestrian Walk [s] | 0 |
| Pedestrian Clearance [s] | 0 |

**Lane Group Calculations**

| Lane Group | L | C | R | L | C | R | L | C | R | L | C | C |
|---|---|---|---|---|---|---|---|---|---|---|---|---|
| L, Total Lost Time per Cycle [s] | 4.00 | 4.00 | 4.00 | 4.00 | 4.00 | 4.00 | 4.00 | 4.00 | 4.00 | 4.00 | 4.00 | 4.00 |
| l1_p, Permitted Start-Up Lost Time [s] | 0.00 | 0.00 | 0.00 | 0.00 | 0.00 | 0.00 | 0.00 | 0.00 | 0.00 | 0.00 | 0.00 | 0.00 |
| l2, Clearance Lost Time [s] | 2.00 | 2.00 | 0.00 | 2.00 | 2.00 | 0.00 | 2.00 | 2.00 | 0.00 | 2.00 | 2.00 | 2.00 |
| g_i, Effective Green Time [s] | 21 | 20 | 45 | 14 | 14 | 27 | 9 | 49 | 73 | 21 | 60 | 60 |
| g / C, Green / Cycle | 0.17 | 0.17 | 0.38 | 0.12 | 0.11 | 0.23 | 0.08 | 0.41 | 0.61 | 0.18 | 0.50 | 0.50 |
| (v / s)_i Volume / Saturation Flow Rate | 0.14 | 0.14 | 0.19 | 0.10 | 0.09 | 0.03 | 0.06 | 0.15 | 0.29 | 0.05 | 0.20 | 0.20 |
| s, saturation flow rate [veh/h] | 3445 | 3547 | 1583 | 1774 | 3547 | 1583 | 3379 | 3478 | 1553 | 3379 | 1827 | 1616 |
| c, Capacity [veh/h] | 592 | 593 | 595 | 212 | 409 | 360 | 266 | 1407 | 947 | 593 | 916 | 810 |
| d1, Uniform Delay [s] | 47.92 | 48.27 | 28.93 | 51.80 | 51.88 | 37.07 | 52.56 | 18.91 | 5.37 | 39.79 | 11.77 | 11.78 |
| k, delay calibration | 0.11 | 0.11 | 0.18 | 0.11 | 0.11 | 0.11 | 0.11 | 0.50 | 0.50 | 0.11 | 0.50 | 0.50 |
| I, Upstream Filtering Factor | 1.00 | 1.00 | 1.00 | 1.00 | 1.00 | 1.00 | 1.00 | 1.00 | 1.00 | 1.00 | 1.00 | 1.00 |
| d2, Incremental Delay [s] | 2.82 | 2.88 | 1.15 | 8.99 | 3.95 | 0.18 | 3.98 | 0.77 | 1.68 | 0.25 | 1.33 | 1.50 |
| d3, Initial Queue Delay [s] | 0.00 | 0.00 | 0.00 | 0.00 | 0.00 | 0.00 | 0.00 | 0.00 | 0.00 | 0.00 | 0.00 | 0.00 |
| Rp, platoon ratio | 1.00 | 1.00 | 1.00 | 1.00 | 1.00 | 1.00 | 1.33 | 1.33 | 1.33 | 1.33 | 1.33 | 1.33 |
| PF, progression factor | 1.00 | 1.00 | 1.00 | 1.00 | 1.00 | 1.00 | 1.00 | 1.00 | 1.00 | 1.00 | 1.00 | 1.00 |

**Lane Group Results**

| | | | | | | | | | | | | |
|---|---|---|---|---|---|---|---|---|---|---|---|---|
| X, volume / capacity | 0.82 | 0.82 | 0.51 | 0.85 | 0.81 | 0.14 | 0.74 | 0.38 | 0.47 | 0.28 | 0.40 | 0.40 |
| d, Delay for Lane Group [s/veh] | 50.74 | 51.15 | 30.08 | 60.78 | 55.83 | 37.25 | 56.54 | 19.68 | 7.04 | 40.04 | 13.10 | 13.28 |
| Lane Group LOS | D | D | C | E | E | D | E | B | A | D | B | B |
| Critical Lane Group | No | No | Yes | Yes | No | No | No | No | Yes | Yes | No | No |
| 50th-Percentile Queue Length [veh] | 7.06 | 7.12 | 6.74 | 5.75 | 5.02 | 1.20 | 2.91 | 3.97 | 2.83 | 2.00 | 4.23 | 3.79 |
| 50th-Percentile Queue Length [ft] | 176.42 | 178.05 | 168.57 | 143.64 | 125.49 | 30.04 | 72.79 | 99.32 | 70.76 | 49.93 | 105.72 | 94.67 |
| 95th-Percentile Queue Length [veh] | 11.41 | 11.50 | 11.00 | 9.68 | 8.69 | 2.16 | 5.24 | 7.15 | 5.09 | 3.60 | 7.60 | 6.82 |
| 95th-Percentile Queue Length [ft] | 285.34 | 287.46 | 275.04 | 241.92 | 217.35 | 54.07 | 131.03 | 178.77 | 127.37 | 89.88 | 190.03 | 170.41 |

**Movement, Approach, & Intersection Results**

| | | | | | | | | | | | | |
|---|---|---|---|---|---|---|---|---|---|---|---|---|
| d_M, Delay for Movement [s/veh] | 50.74 | 51.15 | 30.08 | 60.78 | 55.83 | 37.25 | 56.54 | 19.68 | 7.04 | 40.04 | 13.13 | 13.28 |
| Movement LOS | D | D | C | E | E | D | E | B | A | D | B | B |
| d_A, Approach Delay [s/veh] | 45.97 | | | 55.73 | | | 21.05 | | | 18.32 | | |
| Approach LOS | D | | | E | | | C | | | B | | |
| d_I, Intersection Delay [s/veh] | 33.68 | | | | | | | | | | | |
| Intersection LOS | C | | | | | | | | | | | |
| Intersection V/C | 0.600 | | | | | | | | | | | |

## Sequence

| | | | | | | | | | | | | | | | | |
|---|---|---|---|---|---|---|---|---|---|---|---|---|---|---|---|---|
| Ring 1 | 1 | 2 | 3 | 4 | - | - | - | - | - | - | - | - | - | - | - | - |
| Ring 2 | 5 | 6 | 7 | 8 | - | - | - | - | - | - | - | - | - | - | - | - |
| Ring 3 | - | - | - | - | - | - | - | - | - | - | - | - | - | - | - | - |
| Ring 4 | - | - | - | - | - | - | - | - | - | - | - | - | - | - | - | - |

**Intersection Level Of Service Report**
**Intersection 9: Locust Ave (NS) / Marygold Ave (EW)**

| | | | |
|---|---|---|---|
| Control Type: | All-way stop | Delay (sec / veh): | 14.0 |
| Analysis Method: | HCM 2010 | Level Of Service: | B |
| Analysis Period: | 15 minutes | | |

**Intersection Setup**

| Name | Locust Avenue | | | Locust Avenue | | | Marygold Avenue | | | | | |
|---|---|---|---|---|---|---|---|---|---|---|---|---|
| Approach | Northbound | | | Southbound | | | Eastbound | | | Westbound | | |
| Lane Configuration | | | | | | | | | | | | |
| Turning Movement | Left | Thru | Right | Left | Thru | Right | Left | Thru | Right | Left | Thru | Right |
| Lane Width [ft] | 12.00 | 12.00 | 12.00 | 12.00 | 12.00 | 12.00 | 12.00 | 12.00 | 12.00 | 12.00 | 12.00 | 12.00 |
| No. of Lanes in Pocket | 0 | 0 | 1 | 0 | 0 | 1 | 0 | 0 | 0 | 0 | 0 | 0 |
| Pocket Length [ft] | 100.00 | 100.00 | 100.00 | 100.00 | 100.00 | 325.00 | 100.00 | 100.00 | 100.00 | 100.00 | 100.00 | 100.00 |
| Speed [mph] | 30.00 | | | 40.00 | | | 30.00 | | | 30.00 | | |
| Grade [%] | 0.00 | | | 0.00 | | | 0.00 | | | 0.00 | | |
| Crosswalk | Yes | | | Yes | | | Yes | | | Yes | | |

**volumes**

| Name | Locust Avenue | | | Locust Avenue | | | Marygold Avenue | | | | | |
|---|---|---|---|---|---|---|---|---|---|---|---|---|
| Base Volume Input [veh/h] | 62 | 498 | 49 | 19 | 198 | 13 | 61 | 93 | 52 | 33 | 33 | 31 |
| Base Volume Adjustment Factor | 1.0000 | 1.0000 | 1.0000 | 1.0000 | 1.0000 | 1.0000 | 1.0000 | 1.0000 | 1.0000 | 1.0000 | 1.0000 | 1.0000 |
| Heavy Vehicles Percentage [%] | 2.00 | 2.00 | 2.00 | 2.00 | 2.00 | 2.00 | 2.00 | 2.00 | 2.00 | 2.00 | 2.00 | 2.00 |
| Growth Rate | 1.00 | 1.00 | 1.00 | 1.00 | 1.00 | 1.00 | 1.00 | 1.00 | 1.00 | 1.00 | 1.00 | 1.00 |
| In-Process Volume [veh/h] | 0 | 0 | 0 | 0 | 0 | 0 | 0 | 0 | 0 | 0 | 0 | 0 |
| Site-Generated Trips [veh/h] | 0 | 0 | 0 | 0 | 0 | 0 | 0 | 0 | 0 | 0 | 0 | 0 |
| Diverted Trips [veh/h] | 0 | 0 | 0 | 0 | 0 | 0 | 0 | 0 | 0 | 0 | 0 | 0 |
| Pass-by Trips [veh/h] | 0 | 0 | 0 | 0 | 0 | 0 | 0 | 0 | 0 | 0 | 0 | 0 |
| Existing Site Adjustment Volume [veh/h] | 0 | 0 | 0 | 0 | 0 | 0 | 0 | 0 | 0 | 0 | 0 | 0 |
| Other Volume [veh/h] | 0 | 0 | 0 | 0 | 0 | 0 | 0 | 0 | 0 | 0 | 0 | 0 |
| Total Hourly Volume [veh/h] | 62 | 498 | 49 | 19 | 198 | 13 | 61 | 93 | 52 | 33 | 33 | 31 |
| Peak Hour Factor | 0.9500 | 0.9500 | 0.9500 | 0.9500 | 0.9500 | 0.9500 | 0.9500 | 0.9500 | 0.9500 | 0.9500 | 0.9500 | 0.9500 |
| Other Adjustment Factor | 1.0000 | 1.0000 | 1.0000 | 1.0000 | 1.0000 | 1.0000 | 1.0000 | 1.0000 | 1.0000 | 1.0000 | 1.0000 | 1.0000 |
| Total 15-Minute Volume [veh/h] | 16 | 131 | 13 | 5 | 52 | 3 | 16 | 24 | 14 | 9 | 9 | 8 |
| Total Analysis Volume [veh/h] | 65 | 524 | 52 | 20 | 208 | 14 | 64 | 98 | 55 | 35 | 35 | 33 |
| Pedestrian Volume [ped/h] | 0 | | | 0 | | | 0 | | | 0 | | |

**Intersection Settings**

**Lanes**

**Movement, Approach, & Intersection Results**

| | | | | | | |
|---|---|---|---|---|---|---|
| 95th-Percentile Queue Length [veh] | 3.23 | 3.02 | 2.02 | 0.07 | 1.70 | 0.67 |
| 95th-Percentile Queue Length [ft] | 80.66 | 75.48 | 50.41 | 1.72 | 42.52 | 16.66 |
| Approach Delay [s/veh] | 15.22 | | 13.47 | | 12.71 | 10.85 |
| Approach LOS | C | | B | | B | B |
| Intersection Delay [s/veh] | 14.04 | | | | | |
| Intersection LOS | B | | | | | |

**Intersection Level Of Service Report**
**Intersection 13: Cedar Ave (NS) / Valley Blvd (EW)**

| | | | |
|---|---|---|---|
| Control Type: | Signalized | Delay (sec / veh): | 31.8 |
| Analysis Method: | HCM 2010 | Level Of Service: | C |
| Analysis Period: | 15 minutes | Volume to Capacity (v/c): | 0.788 |

**Intersection Setup**

| Name | Cedar Avenue | | | Cedar Avenue | | | | | | Valley Boulevard | | |
|---|---|---|---|---|---|---|---|---|---|---|---|---|
| Approach | Northbound | | | Southbound | | | Eastbound | | | Westbound | | |
| Lane Configuration | | | | | | | | | | | | |
| Turning Movement | Left | Thru | Right | Left | Thru | Right | Left | Thru | Right | Left | Thru | Right |
| Lane Width [ft] | 12.00 | 12.00 | 12.00 | 12.00 | 12.00 | 12.00 | 12.00 | 12.00 | 12.00 | 12.00 | 12.00 | 12.00 |
| No. of Lanes in Pocket | 2 | 0 | 1 | 2 | 0 | 0 | 2 | 0 | 1 | 2 | 0 | 0 |
| Pocket Length [ft] | 235.00 | 100.00 | 100.00 | 155.00 | 100.00 | 100.00 | 300.00 | 100.00 | 300.00 | 375.00 | 100.00 | 100.00 |
| Speed [mph] | 40.00 | | | 40.00 | | | 30.00 | | | 40.00 | | |
| Grade [%] | 0.00 | | | 0.00 | | | 0.00 | | | 0.00 | | |
| Crosswalk | Yes | | | Yes | | | Yes | | | Yes | | |

**volumes**

| Name | Cedar Avenue | | | Cedar Avenue | | | | | | Valley Boulevard | | |
|---|---|---|---|---|---|---|---|---|---|---|---|---|
| Base Volume Input [veh/h] | 528 | 1862 | 250 | 143 | 1136 | 71 | 218 | 297 | 475 | 283 | 220 | 107 |
| Base Volume Adjustment Factor | 1.0000 | 1.0000 | 1.0000 | 1.0000 | 1.0000 | 1.0000 | 1.0000 | 1.0000 | 1.0000 | 1.0000 | 1.0000 | 1.0000 |
| Heavy Vehicles Percentage [%] | 5.00 | 5.00 | 5.00 | 4.00 | 4.00 | 4.00 | 4.00 | 4.00 | 4.00 | 4.00 | 4.00 | 4.00 |
| Growth Rate | 1.00 | 1.00 | 1.00 | 1.00 | 1.00 | 1.00 | 1.00 | 1.00 | 1.00 | 1.00 | 1.00 | 1.00 |
| In-Process Volume [veh/h] | 0 | 0 | 0 | 0 | 0 | 0 | 0 | 0 | 0 | 0 | 0 | 0 |
| Site-Generated Trips [veh/h] | 0 | 0 | 0 | 0 | 0 | 0 | 0 | 0 | 0 | 0 | 0 | 0 |
| Diverted Trips [veh/h] | 0 | 0 | 0 | 0 | 0 | 0 | 0 | 0 | 0 | 0 | 0 | 0 |
| Pass-by Trips [veh/h] | 0 | 0 | 0 | 0 | 0 | 0 | 0 | 0 | 0 | 0 | 0 | 0 |
| Existing Site Adjustment Volume [veh/h] | 0 | 0 | 0 | 0 | 0 | 0 | 0 | 0 | 0 | 0 | 0 | 0 |
| Other Volume [veh/h] | 0 | 0 | 0 | 0 | 0 | 0 | 0 | 0 | 0 | 0 | 0 | 0 |
| Right-Turn on Red Volume [veh/h] | 0 | 0 | 0 | 0 | 0 | 0 | 0 | 0 | 0 | 0 | 0 | 0 |
| Total Hourly Volume [veh/h] | 528 | 1862 | 250 | 143 | 1136 | 71 | 218 | 297 | 475 | 283 | 220 | 107 |
| Peak Hour Factor | 0.9760 | 0.9760 | 0.9760 | 0.9760 | 0.9760 | 0.9760 | 0.9760 | 0.9760 | 0.9760 | 0.9760 | 0.9760 | 0.9760 |
| Other Adjustment Factor | 1.0000 | 1.0000 | 1.0000 | 1.0000 | 1.0000 | 1.0000 | 1.0000 | 1.0000 | 1.0000 | 1.0000 | 1.0000 | 1.0000 |
| Total 15-Minute Volume [veh/h] | 135 | 477 | 64 | 37 | 291 | 18 | 56 | 76 | 122 | 72 | 56 | 27 |
| Total Analysis Volume [veh/h] | 541 | 1908 | 256 | 147 | 1164 | 73 | 223 | 304 | 487 | 290 | 225 | 110 |
| Presence of On-Street Parking | No | | No | No | | No | No | | No | No | | No |
| On-Street Parking Maneuver Rate [/h] | 0 | 0 | 0 | 0 | 0 | 0 | 0 | 0 | 0 | 0 | 0 | 0 |
| Local Bus Stopping Rate [/h] | 0 | 0 | 0 | 0 | 0 | 0 | 0 | 0 | 0 | 0 | 0 | 0 |
| Pedestrian Volume [ped/h] | 0 | | | 0 | | | 0 | | | 0 | | |
| Bicycle Volume [bicycles/h] | 0 | | | 0 | | | 0 | | | 0 | | |

**Intersection Settings**

| | |
|---|---|
| Located in CBD | No |
| Signal Coordination Group | 2 - NS - Cedar |
| Cycle Length [s] | 120 |
| Coordination Type | Time of Day Pattern Coordinated |
| Actuation Type | Fully actuated |
| Offset [s] | 76.0 |
| Offset Reference | LagFO |
| Permissive Mode | SingleBand |
| Lost time [s] | 16.00 |

**Phasing & Timing**

| Control Type | Protecte | Permiss | Overlap | Protecte | Permiss | Permiss | Protecte | Permiss | Overlap | Protecte | Permiss | Permiss |
|---|---|---|---|---|---|---|---|---|---|---|---|---|
| Signal group | 5 | 2 | 2 | 1 | 6 | 0 | 3 | 8 | 8 | 7 | 4 | 0 |
| Auxiliary Signal Groups | | | 2,7 | | | | | | 5,8 | | | |
| Lead / Lag | Lead | - | - | Lead | - | - | Lead | - | - | Lead | - | - |
| Minimum Green [s] | 5 | 5 | 5 | 5 | 5 | 0 | 5 | 5 | 5 | 5 | 5 | 0 |
| Maximum Green [s] | 30 | 30 | 30 | 30 | 30 | 0 | 30 | 30 | 30 | 30 | 30 | 0 |
| Amber [s] | 4.4 | 4.4 | 4.4 | 4.4 | 4.4 | 0.0 | 3.7 | 3.7 | 3.7 | 4.4 | 4.4 | 0.0 |
| All red [s] | 1.0 | 1.0 | 1.0 | 1.0 | 1.0 | 0.0 | 1.0 | 1.0 | 1.0 | 1.0 | 1.0 | 0.0 |
| Split [s] | 28 | 65 | 65 | 11 | 48 | 0 | 17 | 27 | 27 | 17 | 27 | 0 |
| Vehicle Extension [s] | 3.0 | 3.0 | 3.0 | 3.0 | 3.0 | 0.0 | 3.0 | 3.0 | 3.0 | 3.0 | 3.0 | 0.0 |
| Walk [s] | 0 | 7 | 7 | 0 | 7 | 0 | 0 | 5 | 5 | 0 | 5 | 0 |
| Pedestrian Clearance [s] | 0 | 28 | 28 | 0 | 27 | 0 | 0 | 10 | 10 | 0 | 10 | 0 |
| I1, Start-Up Lost Time [s] | 2.0 | 2.0 | 2.0 | 2.0 | 2.0 | 0.0 | 2.0 | 2.0 | 2.0 | 2.0 | 2.0 | 0.0 |
| I2, Clearance Lost Time [s] | 3.4 | 3.4 | 3.4 | 3.4 | 3.4 | 0.0 | 2.7 | 2.7 | 2.7 | 3.4 | 3.4 | 0.0 |
| Minimum Recall | No | No | No | No | No | | No | No | No | No | No | |
| Maximum Recall | No | No | No | No | No | | No | No | No | No | No | |
| Pedestrian Recall | No | No | No | No | No | | No | No | No | No | No | |
| Detector Location [ft] | 0.0 | 0.0 | 0.0 | 0.0 | 0.0 | 0.0 | 0.0 | 0.0 | 0.0 | 0.0 | 0.0 | 0.0 |
| Detector Length [ft] | 0.0 | 0.0 | 0.0 | 0.0 | 0.0 | 0.0 | 0.0 | 0.0 | 0.0 | 0.0 | 0.0 | 0.0 |
| I, Upstream Filtering Factor | 1.00 | 1.00 | 1.00 | 1.00 | 1.00 | 1.00 | 1.00 | 1.00 | 1.00 | 1.00 | 1.00 | 1.00 |

**Exclusive Pedestrian Phase**

| | |
|---|---|
| Pedestrian Signal Group | 0 |
| Pedestrian Walk [s] | 0 |
| Pedestrian Clearance [s] | 0 |

**Lane Group Calculations**

| Lane Group | L | C | R | L | C | C | L | C | R | L | C | C |
|---|---|---|---|---|---|---|---|---|---|---|---|---|
| L, Total Lost Time per Cycle [s] | 5.40 | 5.40 | 5.40 | 5.40 | 5.40 | 5.40 | 4.70 | 4.70 | 5.40 | 5.40 | 5.40 | 5.40 |
| l1_p, Permitted Start-Up Lost Time [s] | 0.00 | 0.00 | 0.00 | 0.00 | 0.00 | 0.00 | 0.00 | 0.00 | 0.00 | 0.00 | 0.00 | 0.00 |
| l2, Clearance Lost Time [s] | 3.40 | 3.40 | 0.00 | 3.40 | 3.40 | 3.40 | 2.70 | 2.70 | 0.00 | 3.40 | 3.40 | 3.40 |
| g_i, Effective Green Time [s] | 22 | 60 | 77 | 6 | 44 | 44 | 10 | 22 | 48 | 12 | 23 | 23 |
| g / C, Green / Cycle | 0.18 | 0.50 | 0.64 | 0.05 | 0.37 | 0.37 | 0.08 | 0.18 | 0.40 | 0.10 | 0.19 | 0.19 |
| (v / s)_i Volume / Saturation Flow Rate | 0.16 | 0.39 | 0.17 | 0.04 | 0.24 | 0.24 | 0.07 | 0.17 | 0.18 | 0.09 | 0.10 | 0.10 |
| s, saturation flow rate [veh/h] | 3347 | 4929 | 1538 | 3379 | 3478 | 1772 | 3379 | 1827 | 2749 | 3379 | 1827 | 1628 |
| c, Capacity [veh/h] | 601 | 2475 | 991 | 159 | 1285 | 655 | 279 | 328 | 1096 | 328 | 355 | 316 |
| d1, Uniform Delay [s] | 44.59 | 15.12 | 3.27 | 56.04 | 24.51 | 24.51 | 52.44 | 44.85 | 19.97 | 51.61 | 39.49 | 39.55 |
| k, delay calibration | 0.11 | 0.50 | 0.50 | 0.11 | 0.50 | 0.50 | 0.11 | 0.34 | 0.11 | 0.11 | 0.11 | 0.11 |
| I, Upstream Filtering Factor | 1.00 | 1.00 | 1.00 | 1.00 | 1.00 | 1.00 | 1.00 | 1.00 | 1.00 | 1.00 | 1.00 | 1.00 |
| d2, Incremental Delay [s] | 5.20 | 2.39 | 0.63 | 19.18 | 2.43 | 4.70 | 5.24 | 26.29 | 0.28 | 7.95 | 1.07 | 1.24 |
| d3, Initial Queue Delay [s] | 0.00 | 0.00 | 0.00 | 0.00 | 0.00 | 0.00 | 0.00 | 0.00 | 0.00 | 0.00 | 0.00 | 0.00 |
| Rp, platoon ratio | 1.33 | 1.33 | 1.33 | 1.33 | 1.33 | 1.33 | 1.33 | 1.33 | 1.33 | 1.33 | 1.33 | 1.33 |
| PF, progression factor | 1.00 | 1.00 | 1.00 | 1.00 | 1.00 | 1.00 | 1.00 | 1.00 | 1.00 | 1.00 | 1.00 | 1.00 |

**Lane Group Results**

| | | | | | | | | | | | | |
|---|---|---|---|---|---|---|---|---|---|---|---|---|
| X, volume / capacity | 0.90 | 0.77 | 0.26 | 0.92 | 0.64 | 0.64 | 0.80 | 0.93 | 0.44 | 0.89 | 0.50 | 0.50 |
| d, Delay for Lane Group [s/veh] | 49.79 | 17.51 | 3.91 | 75.23 | 26.93 | 29.21 | 57.68 | 71.13 | 20.25 | 59.56 | 40.57 | 40.79 |
| Lane Group LOS | D | B | A | E | C | C | E | E | C | E | D | D |
| Critical Lane Group | No | Yes | No | Yes | No | No | No | Yes | No | Yes | No | No |
| 50th-Percentile Queue Length [veh] | 7.64 | 9.21 | 1.11 | 2.57 | 7.89 | 8.46 | 3.40 | 10.79 | 3.81 | 4.44 | 4.28 | 3.88 |
| 50th-Percentile Queue Length [ft] | 191.06 | 230.19 | 27.69 | 64.29 | 197.36 | 211.47 | 85.12 | 269.63 | 95.31 | 111.07 | 106.94 | 97.10 |
| 95th-Percentile Queue Length [veh] | 12.18 | 14.18 | 1.99 | 4.63 | 12.50 | 13.23 | 6.13 | 16.17 | 6.86 | 7.90 | 7.67 | 6.99 |
| 95th-Percentile Queue Length [ft] | 304.40 | 354.61 | 49.85 | 115.72 | 312.55 | 330.71 | 153.21 | 404.28 | 171.55 | 197.49 | 191.73 | 174.79 |

**Movement, Approach, & Intersection Results**

| | | | | | | | | | | | | |
|---|---|---|---|---|---|---|---|---|---|---|---|---|
| d_M, Delay for Movement [s/veh] | 49.79 | 17.51 | 3.91 | 75.23 | 27.61 | 29.21 | 57.68 | 71.13 | 20.25 | 59.56 | 40.62 | 40.79 |
| Movement LOS | D | B | A | E | C | C | E | E | C | E | D | D |
| d_A, Approach Delay [s/veh] | 22.68 | | | 32.75 | | | 43.74 | | | 49.44 | | |
| Approach LOS | C | | | C | | | D | | | D | | |
| d_I, Intersection Delay [s/veh] | 31.76 | | | | | | | | | | | |
| Intersection LOS | C | | | | | | | | | | | |
| Intersection V/C | 0.788 | | | | | | | | | | | |

## Sequence

| | | | | | | | | | | | | | | | | |
|---|---|---|---|---|---|---|---|---|---|---|---|---|---|---|---|---|
| Ring 1 | 1 | 2 | 3 | 4 | - | - | - | - | - | - | - | - | - | - | - | - |
| Ring 2 | 5 | 6 | 7 | 8 | - | - | - | - | - | - | - | - | - | - | - | - |
| Ring 3 | - | - | - | - | - | - | - | - | - | - | - | - | - | - | - | - |
| Ring 4 | - | - | - | - | - | - | - | - | - | - | - | - | - | - | - | - |

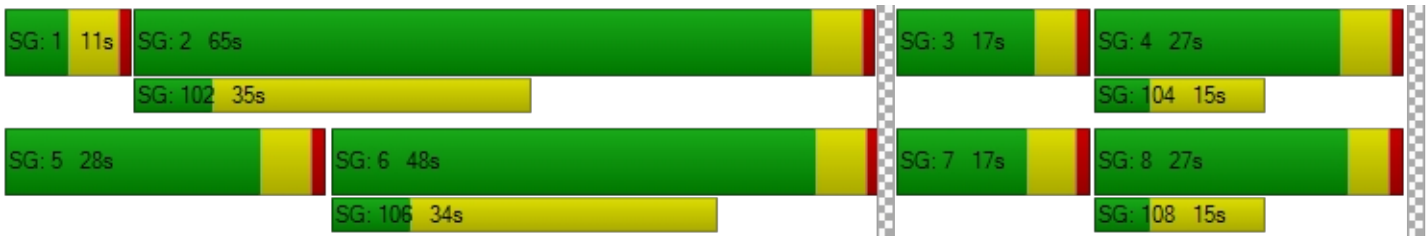

**Intersection Level Of Service Report**
**Intersection 14: Cedar Ave (NS) / I-10 Westbound Ramps (EW)**

| | | | |
|---|---|---|---|
| Control Type: | Signalized | Delay (sec / veh): | 43.1 |
| Analysis Method: | HCM 2010 | Level Of Service: | D |
| Analysis Period: | 15 minutes | Volume to Capacity (v/c): | 0.990 |

**Intersection Setup**

| Name | Cedar Avenue | | | Cedar Avenue | | | | | | I-10 Westbound Ramps | | |
|---|---|---|---|---|---|---|---|---|---|---|---|---|
| Approach | Northbound | | | Southbound | | | Eastbound | | | Westbound | | |
| Lane Configuration | | | | | | | | | | | | |
| Turning Movement | Left | Thru | Right | Left | Thru | Right | Left | Thru | Right | Left | Thru | Right |
| Lane Width [ft] | 12.00 | 12.00 | 12.00 | 12.00 | 12.00 | 12.00 | 12.00 | 12.00 | 12.00 | 12.00 | 12.00 | 12.00 |
| No. of Lanes in Pocket | 1 | 0 | 0 | 0 | 0 | 1 | 0 | 0 | 0 | 0 | 0 | 1 |
| Pocket Length [ft] | 305.00 | 100.00 | 100.00 | 100.00 | 100.00 | 100.00 | 100.00 | 100.00 | 100.00 | 100.00 | 100.00 | 485.00 |
| Speed [mph] | 40.00 | | | 40.00 | | | 30.00 | | | 30.00 | | |
| Grade [%] | 0.00 | | | 0.00 | | | 0.00 | | | 0.00 | | |
| Crosswalk | No | | | No | | | Yes | | | Yes | | |

**volumes**

| Name | Cedar Avenue | | | Cedar Avenue | | | | | | I-10 Westbound Ramps | | |
|---|---|---|---|---|---|---|---|---|---|---|---|---|
| Base Volume Input [veh/h] | 370 | 1850 | 0 | 0 | 1247 | 613 | 0 | 0 | 0 | 470 | 6 | 744 |
| Base Volume Adjustment Factor | 1.0000 | 1.0000 | 1.0000 | 1.0000 | 1.0000 | 1.0000 | 1.0000 | 1.0000 | 1.0000 | 1.0000 | 1.0000 | 1.0000 |
| Heavy Vehicles Percentage [%] | 5.00 | 5.00 | 2.00 | 2.00 | 5.00 | 5.00 | 2.00 | 2.00 | 2.00 | 6.00 | 6.00 | 6.00 |
| Growth Rate | 1.00 | 1.00 | 1.00 | 1.00 | 1.00 | 1.00 | 1.00 | 1.00 | 1.00 | 1.00 | 1.00 | 1.00 |
| In-Process Volume [veh/h] | 0 | 0 | 0 | 0 | 0 | 0 | 0 | 0 | 0 | 0 | 0 | 0 |
| Site-Generated Trips [veh/h] | 0 | 0 | 0 | 0 | 0 | 0 | 0 | 0 | 0 | 0 | 0 | 0 |
| Diverted Trips [veh/h] | 0 | 0 | 0 | 0 | 0 | 0 | 0 | 0 | 0 | 0 | 0 | 0 |
| Pass-by Trips [veh/h] | 0 | 0 | 0 | 0 | 0 | 0 | 0 | 0 | 0 | 0 | 0 | 0 |
| Existing Site Adjustment Volume [veh/h] | 0 | 0 | 0 | 0 | 0 | 0 | 0 | 0 | 0 | 0 | 0 | 0 |
| Other Volume [veh/h] | 0 | 0 | 0 | 0 | 0 | 0 | 0 | 0 | 0 | 0 | 0 | 0 |
| Right-Turn on Red Volume [veh/h] | 0 | 0 | 0 | 0 | 0 | 0 | 0 | 0 | 0 | 0 | 0 | 0 |
| Total Hourly Volume [veh/h] | 370 | 1850 | 0 | 0 | 1247 | 613 | 0 | 0 | 0 | 470 | 6 | 744 |
| Peak Hour Factor | 0.9350 | 0.9350 | 1.0000 | 1.0000 | 0.9350 | 0.9350 | 1.0000 | 1.0000 | 1.0000 | 0.9350 | 0.9350 | 0.9350 |
| Other Adjustment Factor | 1.0000 | 1.0000 | 1.0000 | 1.0000 | 1.0000 | 1.0000 | 1.0000 | 1.0000 | 1.0000 | 1.0000 | 1.0000 | 1.0000 |
| Total 15-Minute Volume [veh/h] | 99 | 495 | 0 | 0 | 333 | 164 | 0 | 0 | 0 | 126 | 2 | 199 |
| Total Analysis Volume [veh/h] | 396 | 1979 | 0 | 0 | 1334 | 656 | 0 | 0 | 0 | 503 | 6 | 796 |
| Presence of On-Street Parking | No | | No | No | | No | | | | No | | No |
| On-Street Parking Maneuver Rate [/h] | 0 | 0 | 0 | 0 | 0 | 0 | 0 | 0 | 0 | 0 | 0 | 0 |
| Local Bus Stopping Rate [/h] | 0 | 0 | 0 | 0 | 0 | 0 | 0 | 0 | 0 | 0 | 0 | 0 |
| Pedestrian Volume [ped/h] | 0 | | | 0 | | | 0 | | | 0 | | |
| Bicycle Volume [bicycles/h] | 0 | | | 0 | | | 0 | | | 0 | | |

**Intersection Settings**

| | |
|---|---|
| Located in CBD | No |
| Signal Coordination Group | 2 - NS - Cedar |
| Cycle Length [s] | 120 |
| Coordination Type | Time of Day Pattern Coordinated |
| Actuation Type | Fully actuated |
| Offset [s] | 85.0 |
| Offset Reference | LagFO |
| Permissive Mode | SingleBand |
| Lost time [s] | 12.00 |

**Phasing & Timing**

| Control Type | Protecte | Permiss | Permiss | Permiss | Permiss | Overlap | Permiss | Permiss | Permiss | Permiss | Permiss | Permiss |
|---|---|---|---|---|---|---|---|---|---|---|---|---|
| Signal group | 5 | 2 | 0 | 0 | 6 | 6 | 0 | 0 | 0 | 0 | 4 | 0 |
| Auxiliary Signal Groups | | | | | | 4,6 | | | | | | |
| Lead / Lag | Lead | - | - | - | - | - | - | - | - | - | - | - |
| Minimum Green [s] | 5 | 5 | 0 | 0 | 5 | 5 | 0 | 0 | 0 | 0 | 5 | 0 |
| Maximum Green [s] | 30 | 30 | 0 | 0 | 30 | 30 | 0 | 0 | 0 | 0 | 30 | 0 |
| Amber [s] | 4.4 | 4.4 | 0.0 | 0.0 | 4.4 | 4.4 | 0.0 | 0.0 | 0.0 | 0.0 | 3.7 | 0.0 |
| All red [s] | 1.0 | 1.0 | 0.0 | 0.0 | 1.0 | 1.0 | 0.0 | 0.0 | 0.0 | 0.0 | 1.0 | 0.0 |
| Split [s] | 20 | 62 | 0 | 0 | 42 | 42 | 0 | 0 | 0 | 0 | 58 | 0 |
| Vehicle Extension [s] | 3.0 | 3.0 | 0.0 | 0.0 | 3.0 | 3.0 | 0.0 | 0.0 | 0.0 | 0.0 | 3.0 | 0.0 |
| Walk [s] | 0 | 7 | 0 | 0 | 7 | 7 | 0 | 0 | 0 | 0 | 7 | 0 |
| Pedestrian Clearance [s] | 0 | 17 | 0 | 0 | 17 | 17 | 0 | 0 | 0 | 0 | 10 | 0 |
| I1, Start-Up Lost Time [s] | 2.0 | 2.0 | 0.0 | 0.0 | 2.0 | 2.0 | 0.0 | 0.0 | 0.0 | 0.0 | 2.0 | 0.0 |
| I2, Clearance Lost Time [s] | 3.4 | 3.4 | 0.0 | 0.0 | 3.4 | 3.4 | 0.0 | 0.0 | 0.0 | 0.0 | 2.7 | 0.0 |
| Minimum Recall | No | No | | | No | No | | | | | No | |
| Maximum Recall | No | No | | | No | No | | | | | No | |
| Pedestrian Recall | No | No | | | No | No | | | | | No | |
| Detector Location [ft] | 0.0 | 0.0 | 0.0 | 0.0 | 0.0 | 0.0 | 0.0 | 0.0 | 0.0 | 0.0 | 0.0 | 0.0 |
| Detector Length [ft] | 0.0 | 0.0 | 0.0 | 0.0 | 0.0 | 0.0 | 0.0 | 0.0 | 0.0 | 0.0 | 0.0 | 0.0 |
| I, Upstream Filtering Factor | 1.00 | 1.00 | 1.00 | 1.00 | 1.00 | 1.00 | 1.00 | 1.00 | 1.00 | 1.00 | 1.00 | 1.00 |

**Exclusive Pedestrian Phase**

| | |
|---|---|
| Pedestrian Signal Group | 0 |
| Pedestrian Walk [s] | 0 |
| Pedestrian Clearance [s] | 0 |

**Lane Group Calculations**

| Lane Group | L | C | C | R | | C | R |
|---|---|---|---|---|---|---|---|
| L, Total Lost Time per Cycle [s] | 5.40 | 5.40 | 5.40 | 4.70 | | 4.70 | 4.70 |
| l1_p, Permitted Start-Up Lost Time [s] | 0.00 | 0.00 | 0.00 | 0.00 | | 2.00 | 0.00 |
| l2, Clearance Lost Time [s] | 3.40 | 3.40 | 3.40 | 0.00 | | 2.70 | 2.70 |
| g_i, Effective Green Time [s] | 15 | 57 | 37 | 95 | | 53 | 53 |
| g / C, Green / Cycle | 0.12 | 0.47 | 0.31 | 0.79 | | 0.44 | 0.44 |
| (v / s)_i Volume / Saturation Flow Rate | 0.12 | 0.40 | 0.27 | 0.43 | | 0.49 | 0.43 |
| s, saturation flow rate [veh/h] | 3347 | 4929 | 4929 | 1538 | | 1334 | 1524 |
| c, Capacity [veh/h] | 408 | 2329 | 1506 | 1221 | | 644 | 675 |
| d1, Uniform Delay [s] | 52.46 | 27.89 | 39.66 | 4.44 | | 36.65 | 32.51 |
| k, delay calibration | 0.11 | 0.50 | 0.50 | 0.43 | | 0.50 | 0.44 |
| I, Upstream Filtering Factor | 1.00 | 1.00 | 1.00 | 1.00 | | 1.00 | 1.00 |
| d2, Incremental Delay [s] | 14.80 | 4.12 | 8.02 | 1.47 | | 38.63 | 25.02 |
| d3, Initial Queue Delay [s] | 0.00 | 0.00 | 0.00 | 0.00 | | 0.00 | 0.00 |
| Rp, platoon ratio | 1.00 | 1.00 | 1.00 | 1.00 | | 1.00 | 1.00 |
| PF, progression factor | 1.00 | 1.00 | 1.00 | 1.00 | | 1.00 | 1.00 |

**Lane Group Results**

| | | | | | | | |
|---|---|---|---|---|---|---|---|
| X, volume / capacity | 0.97 | 0.85 | 0.89 | 0.54 | | 1.01 | 0.97 |
| d, Delay for Lane Group [s/veh] | 67.25 | 32.01 | 47.68 | 5.91 | | 75.29 | 57.53 |
| Lane Group LOS | E | C | D | A | | F | E |
| Critical Lane Group | No | Yes | No | No | | Yes | No |
| 50th-Percentile Queue Length [veh] | 6.66 | 16.60 | 13.20 | 4.53 | | 26.44 | 22.56 |
| 50th-Percentile Queue Length [ft] | 166.56 | 415.08 | 330.00 | 113.33 | | 661.02 | 564.03 |
| 95th-Percentile Queue Length [veh] | 10.90 | 23.29 | 19.16 | 8.02 | | 35.21 | 30.35 |
| 95th-Percentile Queue Length [ft] | 272.39 | 582.14 | 478.96 | 200.62 | | 880.36 | 758.77 |

**Movement, Approach, & Intersection Results**

| | | | | | | | | | | | | |
|---|---|---|---|---|---|---|---|---|---|---|---|---|
| d_M, Delay for Movement [s/veh] | 67.25 | 32.01 | 0.00 | 0.00 | 47.68 | 5.91 | 0.00 | 0.00 | 0.00 | 75.29 | 75.29 | 60.73 |
| Movement LOS | E | C | | | D | A | | | | E | E | E |
| d_A, Approach Delay [s/veh] | 37.89 | | | 33.91 | | | 0.00 | | | 66.41 | | |
| Approach LOS | D | | | C | | | A | | | E | | |
| d_I, Intersection Delay [s/veh] | 43.06 | | | | | | | | | | | |
| Intersection LOS | D | | | | | | | | | | | |
| Intersection V/C | 0.990 | | | | | | | | | | | |

## Sequence

| | | | | | | | | | | | | | | | | |
|---|---|---|---|---|---|---|---|---|---|---|---|---|---|---|---|---|
| Ring 1 | - | 2 | 4 | - | - | - | - | - | - | - | - | - | - | - | - | - |
| Ring 2 | 5 | 6 | - | - | - | - | - | - | - | - | - | - | - | - | - | - |
| Ring 3 | - | - | - | - | - | - | - | - | - | - | - | - | - | - | - | - |
| Ring 4 | - | - | - | - | - | - | - | - | - | - | - | - | - | - | - | - |

**Intersection Level Of Service Report**
**Intersection 15: Cedar Ave (NS) / I-10 Eastbound Ramps (EW)**

| | | | |
|---|---|---|---|
| Control Type: | Signalized | Delay (sec / veh): | 51.8 |
| Analysis Method: | HCM 2010 | Level Of Service: | D |
| Analysis Period: | 15 minutes | Volume to Capacity (v/c): | 0.971 |

**Intersection Setup**

| Name | Cedar Avenue | | | Cedar Avenue | | | | | | I-10 Eastbound Ramps | | |
|---|---|---|---|---|---|---|---|---|---|---|---|---|
| Approach | Northbound | | | Southbound | | | Eastbound | | | Westbound | | |
| Lane Configuration | | | | | | | | | | | | |
| Turning Movement | Left | Thru | Right | Left | Thru | Right | Left | Thru | Right | Left | Thru | Right |
| Lane Width [ft] | 12.00 | 12.00 | 12.00 | 12.00 | 12.00 | 12.00 | 12.00 | 12.00 | 12.00 | 12.00 | 12.00 | 12.00 |
| No. of Lanes in Pocket | 0 | 0 | 1 | 1 | 0 | 0 | 1 | 0 | 0 | 0 | 0 | 0 |
| Pocket Length [ft] | 100.00 | 100.00 | 555.00 | 305.00 | 100.00 | 100.00 | 340.00 | 100.00 | 100.00 | 100.00 | 100.00 | 100.00 |
| Speed [mph] | 40.00 | | | 40.00 | | | 30.00 | | | 30.00 | | |
| Grade [%] | 0.00 | | | 0.00 | | | 0.00 | | | 0.00 | | |
| Crosswalk | No | | | No | | | Yes | | | Yes | | |

**volumes**

| Name | Cedar Avenue | | | Cedar Avenue | | | | | | I-10 Eastbound Ramps | | |
|---|---|---|---|---|---|---|---|---|---|---|---|---|
| Base Volume Input [veh/h] | 0 | 1215 | 415 | 462 | 1278 | 0 | 1025 | 3 | 273 | 0 | 0 | 0 |
| Base Volume Adjustment Factor | 1.0000 | 1.0000 | 1.0000 | 1.0000 | 1.0000 | 1.0000 | 1.0000 | 1.0000 | 1.0000 | 1.0000 | 1.0000 | 1.0000 |
| Heavy Vehicles Percentage [%] | 2.00 | 5.00 | 5.00 | 5.00 | 5.00 | 2.00 | 6.00 | 6.00 | 6.00 | 2.00 | 2.00 | 2.00 |
| Growth Rate | 1.00 | 1.00 | 1.00 | 1.00 | 1.00 | 1.00 | 1.00 | 1.00 | 1.00 | 1.00 | 1.00 | 1.00 |
| In-Process Volume [veh/h] | 0 | 0 | 0 | 0 | 0 | 0 | 0 | 0 | 0 | 0 | 0 | 0 |
| Site-Generated Trips [veh/h] | 0 | 0 | 0 | 0 | 0 | 0 | 0 | 0 | 0 | 0 | 0 | 0 |
| Diverted Trips [veh/h] | 0 | 0 | 0 | 0 | 0 | 0 | 0 | 0 | 0 | 0 | 0 | 0 |
| Pass-by Trips [veh/h] | 0 | 0 | 0 | 0 | 0 | 0 | 0 | 0 | 0 | 0 | 0 | 0 |
| Existing Site Adjustment Volume [veh/h] | 0 | 0 | 0 | 0 | 0 | 0 | 0 | 0 | 0 | 0 | 0 | 0 |
| Other Volume [veh/h] | 0 | 0 | 0 | 0 | 0 | 0 | 0 | 0 | 0 | 0 | 0 | 0 |
| Right-Turn on Red Volume [veh/h] | 0 | 0 | 0 | 0 | 0 | 0 | 0 | 0 | 0 | 0 | 0 | 0 |
| Total Hourly Volume [veh/h] | 0 | 1215 | 415 | 462 | 1278 | 0 | 1025 | 3 | 273 | 0 | 0 | 0 |
| Peak Hour Factor | 1.0000 | 0.9240 | 0.9240 | 0.9240 | 0.9240 | 1.0000 | 0.9240 | 0.9240 | 0.9240 | 1.0000 | 1.0000 | 1.0000 |
| Other Adjustment Factor | 1.0000 | 1.0000 | 1.0000 | 1.0000 | 1.0000 | 1.0000 | 1.0000 | 1.0000 | 1.0000 | 1.0000 | 1.0000 | 1.0000 |
| Total 15-Minute Volume [veh/h] | 0 | 329 | 112 | 125 | 346 | 0 | 277 | 1 | 74 | 0 | 0 | 0 |
| Total Analysis Volume [veh/h] | 0 | 1315 | 449 | 500 | 1383 | 0 | 1109 | 3 | 295 | 0 | 0 | 0 |
| Presence of On-Street Parking | No | | No | No | | No | No | | No | | | |
| On-Street Parking Maneuver Rate [/h] | 0 | 0 | 0 | 0 | 0 | 0 | 0 | 0 | 0 | 0 | 0 | 0 |
| Local Bus Stopping Rate [/h] | 0 | 0 | 0 | 0 | 0 | 0 | 0 | 0 | 0 | 0 | 0 | 0 |
| Pedestrian Volume [ped/h] | 0 | | | 0 | | | 0 | | | 0 | | |
| Bicycle Volume [bicycles/h] | 0 | | | 0 | | | 0 | | | 0 | | |

**Intersection Settings**

| | |
|---|---|
| Located in CBD | No |
| Signal Coordination Group | 2 - NS - Cedar |
| Cycle Length [s] | 120 |
| Coordination Type | Time of Day Pattern Coordinated |
| Actuation Type | Fully actuated |
| Offset [s] | 81.0 |
| Offset Reference | LagFO |
| Permissive Mode | SingleBand |
| Lost time [s] | 12.00 |

**Phasing & Timing**

| Control Type | Permiss | Permiss | Permiss | Protecte | Permiss | Permiss | Permiss | Permiss | Permiss | Permiss | Permiss | Permiss |
|---|---|---|---|---|---|---|---|---|---|---|---|---|
| Signal group | 0 | 2 | 0 | 1 | 6 | 0 | 0 | 8 | 0 | 0 | 0 | 0 |
| Auxiliary Signal Groups | | | | | | | | | | | | |
| Lead / Lag | - | - | - | Lead | - | - | - | - | - | - | - | - |
| Minimum Green [s] | 0 | 5 | 0 | 5 | 5 | 0 | 0 | 5 | 0 | 0 | 0 | 0 |
| Maximum Green [s] | 0 | 30 | 0 | 30 | 30 | 0 | 0 | 30 | 0 | 0 | 0 | 0 |
| Amber [s] | 0.0 | 4.4 | 0.0 | 4.4 | 4.4 | 0.0 | 0.0 | 3.7 | 0.0 | 0.0 | 0.0 | 0.0 |
| All red [s] | 0.0 | 1.0 | 0.0 | 1.0 | 1.0 | 0.0 | 0.0 | 1.0 | 0.0 | 0.0 | 0.0 | 0.0 |
| Split [s] | 0 | 40 | 0 | 24 | 64 | 0 | 0 | 56 | 0 | 0 | 0 | 0 |
| Vehicle Extension [s] | 0.0 | 3.0 | 0.0 | 3.0 | 3.0 | 0.0 | 0.0 | 3.0 | 0.0 | 0.0 | 0.0 | 0.0 |
| Walk [s] | 0 | 7 | 0 | 0 | 7 | 0 | 0 | 7 | 0 | 0 | 0 | 0 |
| Pedestrian Clearance [s] | 0 | 21 | 0 | 0 | 16 | 0 | 0 | 10 | 0 | 0 | 0 | 0 |
| I1, Start-Up Lost Time [s] | 0.0 | 2.0 | 0.0 | 2.0 | 2.0 | 0.0 | 0.0 | 2.0 | 0.0 | 0.0 | 0.0 | 0.0 |
| I2, Clearance Lost Time [s] | 0.0 | 3.4 | 0.0 | 3.4 | 3.4 | 0.0 | 0.0 | 2.7 | 0.0 | 0.0 | 0.0 | 0.0 |
| Minimum Recall | | No | | No | No | | | No | | | | |
| Maximum Recall | | No | | No | No | | | No | | | | |
| Pedestrian Recall | | No | | No | No | | | No | | | | |
| Detector Location [ft] | 0.0 | 0.0 | 0.0 | 0.0 | 0.0 | 0.0 | 0.0 | 0.0 | 0.0 | 0.0 | 0.0 | 0.0 |
| Detector Length [ft] | 0.0 | 0.0 | 0.0 | 0.0 | 0.0 | 0.0 | 0.0 | 0.0 | 0.0 | 0.0 | 0.0 | 0.0 |
| I, Upstream Filtering Factor | 1.00 | 1.00 | 1.00 | 1.00 | 1.00 | 1.00 | 1.00 | 1.00 | 1.00 | 1.00 | 1.00 | 1.00 |

**Exclusive Pedestrian Phase**

| | |
|---|---|
| Pedestrian Signal Group | 0 |
| Pedestrian Walk [s] | 0 |
| Pedestrian Clearance [s] | 0 |

**Lane Group Calculations**

| Lane Group | C | R | L | C | L | C | |
|---|---|---|---|---|---|---|---|
| L, Total Lost Time per Cycle [s] | 5.40 | 5.40 | 5.40 | 5.40 | 4.70 | 4.70 | |
| l1_p, Permitted Start-Up Lost Time [s] | 0.00 | 0.00 | 0.00 | 0.00 | 0.00 | 0.00 | |
| l2, Clearance Lost Time [s] | 3.40 | 3.40 | 3.40 | 3.40 | 2.70 | 2.70 | |
| g_i, Effective Green Time [s] | 35 | 35 | 19 | 59 | 51 | 51 | |
| g / C, Green / Cycle | 0.29 | 0.29 | 0.16 | 0.49 | 0.43 | 0.43 | |
| (v / s)_i Volume / Saturation Flow Rate | 0.27 | 0.29 | 0.15 | 0.28 | 0.41 | 0.43 | |
| s, saturation flow rate [veh/h] | 4929 | 1538 | 3347 | 4929 | 1707 | 1625 | |
| c, Capacity [veh/h] | 1426 | 445 | 519 | 2413 | 728 | 693 | |
| d1, Uniform Delay [s] | 41.32 | 42.63 | 50.33 | 21.73 | 33.58 | 34.41 | |
| k, delay calibration | 0.50 | 0.50 | 0.11 | 0.50 | 0.43 | 0.47 | |
| I, Upstream Filtering Factor | 1.00 | 1.00 | 1.00 | 1.00 | 1.00 | 1.00 | |
| d2, Incremental Delay [s] | 11.30 | 44.93 | 11.47 | 1.00 | 23.97 | 37.03 | |
| d3, Initial Queue Delay [s] | 0.00 | 0.00 | 0.00 | 0.00 | 0.00 | 0.00 | |
| Rp, platoon ratio | 1.00 | 1.00 | 1.00 | 1.00 | 1.00 | 1.00 | |
| PF, progression factor | 1.00 | 1.00 | 1.00 | 1.00 | 1.00 | 1.00 | |

**Lane Group Results**

| | | | | | | | |
|---|---|---|---|---|---|---|---|
| X, volume / capacity | 0.92 | 1.01 | 0.96 | 0.57 | 0.97 | 1.02 | |
| d, Delay for Lane Group [s/veh] | 52.62 | 87.57 | 61.80 | 22.73 | 57.55 | 71.44 | |
| Lane Group LOS | D | F | E | C | E | F | |
| Critical Lane Group | No | Yes | Yes | No | No | Yes | |
| 50th-Percentile Queue Length [veh] | 13.67 | 18.31 | 8.12 | 9.00 | 24.25 | 26.71 | |
| 50th-Percentile Queue Length [ft] | 341.68 | 457.64 | 203.08 | 224.98 | 606.27 | 667.80 | |
| 95th-Percentile Queue Length [veh] | 19.73 | 25.47 | 12.80 | 13.92 | 32.33 | 35.60 | |
| 95th-Percentile Queue Length [ft] | 493.25 | 636.73 | 319.93 | 347.97 | 808.17 | 889.99 | |

**Movement, Approach, & Intersection Results**

| | | | | | | | | | | | | |
|---|---|---|---|---|---|---|---|---|---|---|---|---|
| d_M, Delay for Movement [s/veh] | 0.00 | 52.62 | 87.57 | 61.80 | 22.73 | 0.00 | 62.63 | 71.44 | 71.44 | 0.00 | 0.00 | 0.00 |
| Movement LOS | | D | F | E | C | | E | E | E | | | |
| d_A, Approach Delay [s/veh] | 61.52 | | | 33.10 | | | 64.50 | | | 0.00 | | |
| Approach LOS | E | | | C | | | E | | | A | | |
| d_I, Intersection Delay [s/veh] | 51.76 | | | | | | | | | | | |
| Intersection LOS | D | | | | | | | | | | | |
| Intersection V/C | 0.971 | | | | | | | | | | | |

## Sequence

| | | | | | | | | | | | | | | | | |
|---|---|---|---|---|---|---|---|---|---|---|---|---|---|---|---|---|
| Ring 1 | 1 | 2 | - | - | - | - | - | - | - | - | - | - | - | - | - | - |
| Ring 2 | - | 6 | 8 | - | - | - | - | - | - | - | - | - | - | - | - | - |
| Ring 3 | - | - | - | - | - | - | - | - | - | - | - | - | - | - | - | - |
| Ring 4 | - | - | - | - | - | - | - | - | - | - | - | - | - | - | - | - |

**Intersection Level Of Service Report**
**Intersection 16: Cedar Ave (NS) / Slover Ave (EW)**

| | | | |
|---|---|---|---|
| Control Type: | Signalized | Delay (sec / veh): | 53.3 |
| Analysis Method: | HCM 2010 | Level Of Service: | D |
| Analysis Period: | 15 minutes | Volume to Capacity (v/c): | 0.750 |

**Intersection Setup**

| Name | Cedar Avenue | | | Cedar Avenue | | | Slover Avenue | | | Slover Avenue | | |
|---|---|---|---|---|---|---|---|---|---|---|---|---|
| Approach | Northbound | | | Southbound | | | Eastbound | | | Westbound | | |
| Lane Configuration | | | | | | | | | | | | |
| Turning Movement | Left | Thru | Right | Left | Thru | Right | Left | Thru | Right | Left | Thru | Right |
| Lane Width [ft] | 12.00 | 12.00 | 12.00 | 12.00 | 12.00 | 12.00 | 12.00 | 12.00 | 12.00 | 12.00 | 12.00 | 12.00 |
| No. of Lanes in Pocket | 1 | 0 | 0 | 1 | 0 | 0 | 1 | 0 | 0 | 1 | 0 | 0 |
| Pocket Length [ft] | 200.00 | 100.00 | 100.00 | 85.00 | 100.00 | 100.00 | 185.00 | 100.00 | 100.00 | 150.00 | 100.00 | 100.00 |
| Speed [mph] | 45.00 | | | 45.00 | | | 50.00 | | | 50.00 | | |
| Grade [%] | 0.00 | | | 0.00 | | | 0.00 | | | 0.00 | | |
| Crosswalk | Yes | | | Yes | | | Yes | | | Yes | | |

**volumes**

| Name | Cedar Avenue | | | Cedar Avenue | | | Slover Avenue | | | Slover Avenue | | |
|---|---|---|---|---|---|---|---|---|---|---|---|---|
| Base Volume Input [veh/h] | 115 | 796 | 9 | 62 | 792 | 287 | 507 | 189 | 74 | 16 | 179 | 95 |
| Base Volume Adjustment Factor | 1.0000 | 1.0000 | 1.0000 | 1.0000 | 1.0000 | 1.0000 | 1.0000 | 1.0000 | 1.0000 | 1.0000 | 1.0000 | 1.0000 |
| Heavy Vehicles Percentage [%] | 5.00 | 5.00 | 5.00 | 5.00 | 5.00 | 5.00 | 2.00 | 2.00 | 2.00 | 2.00 | 2.00 | 2.00 |
| Growth Rate | 1.00 | 1.00 | 1.00 | 1.00 | 1.00 | 1.00 | 1.00 | 1.00 | 1.00 | 1.00 | 1.00 | 1.00 |
| In-Process Volume [veh/h] | 0 | 0 | 0 | 0 | 0 | 0 | 0 | 0 | 0 | 0 | 0 | 0 |
| Site-Generated Trips [veh/h] | 0 | 0 | 0 | 0 | 0 | 0 | 0 | 0 | 0 | 0 | 0 | 0 |
| Diverted Trips [veh/h] | 0 | 0 | 0 | 0 | 0 | 0 | 0 | 0 | 0 | 0 | 0 | 0 |
| Pass-by Trips [veh/h] | 0 | 0 | 0 | 0 | 0 | 0 | 0 | 0 | 0 | 0 | 0 | 0 |
| Existing Site Adjustment Volume [veh/h] | 0 | 0 | 0 | 0 | 0 | 0 | 0 | 0 | 0 | 0 | 0 | 0 |
| Other Volume [veh/h] | 0 | 0 | 0 | 0 | 0 | 0 | 0 | 0 | 0 | 0 | 0 | 0 |
| Right-Turn on Red Volume [veh/h] | 0 | 0 | 0 | 0 | 0 | 0 | 0 | 0 | 0 | 0 | 0 | 0 |
| Total Hourly Volume [veh/h] | 115 | 796 | 9 | 62 | 792 | 287 | 507 | 189 | 74 | 16 | 179 | 95 |
| Peak Hour Factor | 0.8589 | 0.8890 | 0.8890 | 0.8890 | 0.8890 | 0.8890 | 0.8890 | 0.8890 | 0.8890 | 0.8890 | 0.8890 | 0.8890 |
| Other Adjustment Factor | 1.0000 | 1.0000 | 1.0000 | 1.0000 | 1.0000 | 1.0000 | 1.0000 | 1.0000 | 1.0000 | 1.0000 | 1.0000 | 1.0000 |
| Total 15-Minute Volume [veh/h] | 33 | 224 | 3 | 17 | 223 | 81 | 143 | 53 | 21 | 4 | 50 | 27 |
| Total Analysis Volume [veh/h] | 134 | 895 | 10 | 70 | 891 | 323 | 570 | 213 | 83 | 18 | 201 | 107 |
| Presence of On-Street Parking | No | | No | No | | No | No | | No | No | | No |
| On-Street Parking Maneuver Rate [/h] | 0 | 0 | 0 | 0 | 0 | 0 | 0 | 0 | 0 | 0 | 0 | 0 |
| Local Bus Stopping Rate [/h] | 0 | 0 | 0 | 0 | 0 | 0 | 0 | 0 | 0 | 0 | 0 | 0 |
| Pedestrian Volume [ped/h] | 0 | | | 0 | | | 0 | | | 0 | | |
| Bicycle Volume [bicycles/h] | 0 | | | 0 | | | 0 | | | 0 | | |

**Intersection Settings**

| | |
|---|---|
| Located in CBD | No |
| Signal Coordination Group | 2 - NS - Cedar |
| Cycle Length [s] | 120 |
| Coordination Type | Time of Day Pattern Coordinated |
| Actuation Type | Fully actuated |
| Offset [s] | 31.0 |
| Offset Reference | LagFO |
| Permissive Mode | SingleBand |
| Lost time [s] | 16.00 |

**Phasing & Timing**

| Control Type | Protecte | Permiss | Permiss | Protecte | Permiss | Permiss | Protecte | Permiss | Permiss | Protecte | Permiss | Overlap |
|---|---|---|---|---|---|---|---|---|---|---|---|---|
| Signal group | 5 | 2 | 0 | 1 | 6 | 0 | 3 | 8 | 0 | 7 | 4 | 4 |
| Auxiliary Signal Groups | | | | | | | | | | | | 1,4 |
| Lead / Lag | Lead | - | - | Lead | - | - | Lead | - | - | Lead | - | - |
| Minimum Green [s] | 5 | 5 | 0 | 5 | 5 | 0 | 5 | 5 | 0 | 5 | 5 | 5 |
| Maximum Green [s] | 30 | 30 | 0 | 30 | 30 | 0 | 30 | 30 | 0 | 30 | 30 | 30 |
| Amber [s] | 4.8 | 4.8 | 0.0 | 4.8 | 4.8 | 0.0 | 5.2 | 5.2 | 0.0 | 5.2 | 5.2 | 5.2 |
| All red [s] | 1.0 | 1.0 | 0.0 | 1.0 | 1.0 | 0.0 | 1.0 | 1.0 | 0.0 | 1.0 | 1.0 | 1.0 |
| Split [s] | 11 | 43 | 0 | 11 | 43 | 0 | 21 | 54 | 0 | 12 | 45 | 45 |
| Vehicle Extension [s] | 3.0 | 3.0 | 0.0 | 3.0 | 3.0 | 0.0 | 3.0 | 3.0 | 0.0 | 3.0 | 3.0 | 3.0 |
| Walk [s] | 0 | 7 | 0 | 0 | 7 | 0 | 0 | 7 | 0 | 0 | 7 | 7 |
| Pedestrian Clearance [s] | 0 | 28 | 0 | 0 | 20 | 0 | 0 | 26 | 0 | 0 | 31 | 31 |
| I1, Start-Up Lost Time [s] | 2.0 | 2.0 | 0.0 | 2.0 | 2.0 | 0.0 | 2.0 | 2.0 | 0.0 | 2.0 | 2.0 | 2.0 |
| I2, Clearance Lost Time [s] | 3.8 | 3.8 | 0.0 | 3.8 | 3.8 | 0.0 | 4.2 | 4.2 | 0.0 | 4.2 | 4.2 | 4.2 |
| Minimum Recall | No | No | | No | No | | No | No | | No | No | No |
| Maximum Recall | No | No | | No | No | | No | No | | No | No | No |
| Pedestrian Recall | No | No | | No | No | | No | No | | No | No | No |
| Detector Location [ft] | 0.0 | 0.0 | 0.0 | 0.0 | 0.0 | 0.0 | 0.0 | 0.0 | 0.0 | 0.0 | 0.0 | 0.0 |
| Detector Length [ft] | 0.0 | 0.0 | 0.0 | 0.0 | 0.0 | 0.0 | 0.0 | 0.0 | 0.0 | 0.0 | 0.0 | 0.0 |
| I, Upstream Filtering Factor | 1.00 | 1.00 | 1.00 | 1.00 | 1.00 | 1.00 | 1.00 | 1.00 | 1.00 | 1.00 | 1.00 | 1.00 |

**Exclusive Pedestrian Phase**

| | |
|---|---|
| Pedestrian Signal Group | 0 |
| Pedestrian Walk [s] | 0 |
| Pedestrian Clearance [s] | 0 |

**Lane Group Calculations**

| Lane Group | L | C | C | L | C | C | L | C | L | C | R |
|---|---|---|---|---|---|---|---|---|---|---|---|
| L, Total Lost Time per Cycle [s] | 5.80 | 5.80 | 5.80 | 5.80 | 5.80 | 5.80 | 6.20 | 6.20 | 6.20 | 6.20 | 5.80 |
| l1_p, Permitted Start-Up Lost Time [s] | 0.00 | 0.00 | 0.00 | 0.00 | 0.00 | 0.00 | 0.00 | 0.00 | 0.00 | 0.00 | 0.00 |
| l2, Clearance Lost Time [s] | 0.00 | 3.80 | 3.80 | 0.00 | 3.80 | 3.80 | 4.20 | 4.20 | 4.20 | 4.20 | 0.00 |
| g_i, Effective Green Time [s] | 72 | 61 | 61 | 72 | 61 | 61 | 15 | 28 | 2 | 15 | 27 |
| g / C, Green / Cycle | 0.60 | 0.50 | 0.50 | 0.60 | 0.51 | 0.51 | 0.12 | 0.23 | 0.02 | 0.13 | 0.22 |
| (v / s)_i Volume / Saturation Flow Rate | 0.22 | 0.25 | 0.25 | 0.09 | 0.35 | 0.35 | 0.17 | 0.17 | 0.01 | 0.11 | 0.07 |
| s, saturation flow rate [veh/h] | 603 | 1810 | 1802 | 739 | 1810 | 1648 | 3445 | 1775 | 1774 | 1863 | 1583 |
| c, Capacity [veh/h] | 346 | 912 | 909 | 450 | 916 | 834 | 426 | 412 | 35 | 239 | 355 |
| d1, Uniform Delay [s] | 12.23 | 12.19 | 12.19 | 6.74 | 13.79 | 13.87 | 52.62 | 42.48 | 58.29 | 51.15 | 38.78 |
| k, delay calibration | 0.50 | 0.50 | 0.50 | 0.50 | 0.50 | 0.50 | 0.13 | 0.11 | 0.11 | 0.11 | 0.42 |
| I, Upstream Filtering Factor | 1.00 | 1.00 | 1.00 | 1.00 | 1.00 | 1.00 | 1.00 | 1.00 | 1.00 | 1.00 | 1.00 |
| d2, Incremental Delay [s] | 3.25 | 1.93 | 1.94 | 0.73 | 4.26 | 4.79 | 155.83 | 2.36 | 11.14 | 7.79 | 1.84 |
| d3, Initial Queue Delay [s] | 0.00 | 0.00 | 0.00 | 0.00 | 0.00 | 0.00 | 0.00 | 0.00 | 0.00 | 0.00 | 0.00 |
| Rp, platoon ratio | 1.33 | 1.33 | 1.33 | 1.33 | 1.33 | 1.33 | 1.00 | 1.00 | 1.00 | 1.00 | 1.00 |
| PF, progression factor | 1.00 | 1.00 | 1.00 | 1.00 | 1.00 | 1.00 | 1.00 | 1.00 | 1.00 | 1.00 | 1.00 |

**Lane Group Results**

| | | | | | | | | | | | |
|---|---|---|---|---|---|---|---|---|---|---|---|
| X, volume / capacity | 0.39 | 0.50 | 0.50 | 0.16 | 0.69 | 0.70 | 1.34 | 0.72 | 0.51 | 0.84 | 0.30 |
| d, Delay for Lane Group [s/veh] | 15.48 | 14.13 | 14.13 | 7.47 | 18.05 | 18.66 | 208.44 | 44.84 | 69.43 | 58.95 | 40.63 |
| Lane Group LOS | B | B | B | A | B | B | F | D | E | E | D |
| Critical Lane Group | Yes | No | No | No | No | Yes | Yes | No | No | Yes | No |
| 50th-Percentile Queue Length [veh] | 1.01 | 5.13 | 5.11 | 0.45 | 8.25 | 7.76 | 15.41 | 8.02 | 0.63 | 6.21 | 2.72 |
| 50th-Percentile Queue Length [ft] | 25.25 | 128.32 | 127.87 | 11.23 | 206.36 | 193.89 | 385.31 | 200.45 | 15.85 | 155.36 | 67.96 |
| 95th-Percentile Queue Length [veh] | 1.82 | 8.85 | 8.82 | 0.81 | 12.97 | 12.32 | 24.41 | 12.66 | 1.14 | 10.30 | 4.89 |
| 95th-Percentile Queue Length [ft] | 45.45 | 221.21 | 220.59 | 20.22 | 324.16 | 308.07 | 610.31 | 316.55 | 28.54 | 257.56 | 122.33 |

**Movement, Approach, & Intersection Results**

| | | | | | | | | | | | | |
|---|---|---|---|---|---|---|---|---|---|---|---|---|
| d_M, Delay for Movement [s/veh] | 15.48 | 14.13 | 14.13 | 7.47 | 18.23 | 18.66 | 208.44 | 44.84 | 44.84 | 69.43 | 58.95 | 40.63 |
| Movement LOS | B | B | B | A | B | B | F | D | D | E | E | D |
| d_A, Approach Delay [s/veh] | 14.30 | | | 17.75 | | | 152.53 | | | 53.51 | | |
| Approach LOS | B | | | B | | | F | | | D | | |
| d_I, Intersection Delay [s/veh] | 53.25 | | | | | | | | | | | |
| Intersection LOS | D | | | | | | | | | | | |
| Intersection V/C | 0.750 | | | | | | | | | | | |

## Sequence

| | | | | | | | | | | | | | | | | |
|---|---|---|---|---|---|---|---|---|---|---|---|---|---|---|---|---|
| Ring 1 | 1 | 2 | 3 | 4 | - | - | - | - | - | - | - | - | - | - | - | - |
| Ring 2 | 5 | 6 | 7 | 8 | - | - | - | - | - | - | - | - | - | - | - | - |
| Ring 3 | - | - | - | - | - | - | - | - | - | - | - | - | - | - | - | - |
| Ring 4 | - | - | - | - | - | - | - | - | - | - | - | - | - | - | - | - |

# APPENDIX E

# Year 2035 Model Worksheets

# VALLEY CORRIDOR SPECIFIC PLAN
## YEAR 2035

### 1. Sierra Avenue / San Bernardino Avenue

| | | | |
|---|---|---|---|
| Base Count Year | 2015 | AM Peak Period Factor | 0.38 |
| Base Model Year | 2008 | PM Peak Period Factor | 0.28 |
| Future Model Year | 2035 | | |

**AM Peak**

| | NB | | SB | | EB | | WB | | Total | |
|---|---|---|---|---|---|---|---|---|---|---|
| | In | Out | In | Out | In | Out | In | Out | In | Out |
| Peak Period Link Volume - Base Model | 2,207 | 3,260 | 2,757 | 2,163 | 469 | 478 | 1,585 | 1,118 | 7,018 | 7,019 |
| Peak Period Link Volume - Future Model | 2,479 | 4,498 | 4,218 | 2,512 | 1,122 | 982 | 1,716 | 1,542 | 9,535 | 9,534 |
| Peak Hour Link Volume - Base Model | 839 | 1,239 | 1,048 | 822 | 178 | 182 | 602 | 425 | 2,667 | 2,667 |
| Peak Hour Link Volume - Future Model | 942 | 1,709 | 1,603 | 955 | 426 | 373 | 652 | 586 | 3,623 | 3,623 |
| Base to Future Model Growth - Ratio | 0.12 | 0.38 | 0.53 | 0.16 | 1.39 | 1.05 | 0.08 | 0.38 | | |
| Pro-rate Ratio - 2015 to 2035 | 0.74 | 0.74 | 0.74 | 0.74 | 0.74 | 0.74 | 0.74 | 0.74 | | |
| Peak Hour Link Volume - Base Count (Existing) | 778 | 1,190 | 962 | 695 | 314 | 272 | 436 | 333 | 2,490 | 2,490 |
| Ratio (Adj Base Model/Count) | 1.11 | 1.14 | 1.24 | 1.23 | 0.77 | 0.85 | 1.41 | 1.40 | | |
| Difference (Count-Adj Base Model) | -87 | -171 | -230 | -161 | 71 | 41 | -179 | -134 | | |
| Adj. Base to Future Model Growth - Ratio | 1.09 | 1.26 | 1.35 | 1.11 | 1.76 | 1.61 | 1.06 | 1.26 | | |
| Minimum Growth % (Existing to Buildout) | 0% | 0% | 0% | 0% | 0% | 0% | 0% | 0% | | |
| Minimum Link Volume - Future | 0 | 0 | 0 | 0 | 0 | 0 | 0 | 0 | | |
| Peak Hour Link Volume - Ratio Adjusted | 847 | 1,495 | 1,294 | 775 | 552 | 439 | 462 | 418 | 3,155 | 3,127 |
| Peak Hour Link Volume - Difference Adjusted | 855 | 1,538 | 1,373 | 793 | 498 | 414 | 473 | 452 | 3,198 | 3,198 |
| Peak Hour Link Volume - Combined Adjusted | 851 | 1,517 | 1,334 | 784 | 525 | 426 | 467 | 435 | 3,177 | 3,162 |
| Growth Method (Ratio/Difference/Combined/Model) | D | D | D | D | D | D | D | D | | |
| Link Volume Adjustment (increase only) | 0 | 0 | 0 | 0 | 0 | 0 | 0 | 0 | | |
| Post-Processed Link Volume | 850 | 1,540 | 1,370 | 790 | 500 | 410 | 470 | 450 | 3,190 | 3,190 |

| | NB | | | SB | | | EB | | | WB | | |
|---|---|---|---|---|---|---|---|---|---|---|---|---|
| | Left | Thru | Right | Left | Thru | Right | Left | Thru | Right | Left | Thru | Right |
| 2015 Existing Turning Movement | 51 | 621 | 106 | 34 | 893 | 35 | 47 | 193 | 74 | 223 | 186 | 27 |
| Project Only Turning Movement | 5 | 5 | 0 | 0 | 11 | 0 | 0 | 0 | 11 | 0 | 0 | 0 |
| Turning Movement Volume Adjustment | 0 | 0 | 0 | 0 | 0 | 0 | 0 | 0 | 0 | 0 | 0 | 0 |
| Starting Point - Turning Movement Volumes | 51 | 621 | 106 | 34 | 893 | 35 | 47 | 193 | 74 | 223 | 186 | 27 |
| **2035 With Project** | **75** | **676** | **99** | **49** | **1242** | **79** | **86** | **302** | **112** | **187** | **255** | **27** |
| Difference (Delta With Project) | 24 | 55 | -7 | 15 | 349 | 44 | 39 | 109 | 38 | -36 | 69 | 0 |
| Difference (%) | 47% | 9% | -7% | 44% | 39% | 126% | 83% | 56% | 51% | -16% | 37% | 0% |
| **2035 Without Project** | **70** | **671** | **99** | **49** | **1231** | **79** | **86** | **302** | **101** | **187** | **255** | **27** |
| Difference (Delta Without Project) | 19 | 50 | -7 | 15 | 338 | 44 | 39 | 109 | 27 | -36 | 69 | 0 |
| Difference (%) | 37% | 8% | -7% | 44% | 38% | 126% | 83% | 56% | 36% | -16% | 37% | 0% |

**PM Peak**

| | NB | | SB | | EB | | WB | | Total | |
|---|---|---|---|---|---|---|---|---|---|---|
| | In | Out | In | Out | In | Out | In | Out | In | Out |
| Peak Period Link Volume - Base Model | 4,838 | 3,655 | 3,389 | 4,287 | 960 | 708 | 1,939 | 2,476 | 11,126 | 11,126 |
| Peak Period Link Volume - Future Model | 6,312 | 4,021 | 4,115 | 6,552 | 1,947 | 1,622 | 2,524 | 2,703 | 14,898 | 14,898 |
| Peak Hour Link Volume - Base Model | 1,355 | 1,023 | 949 | 1,200 | 269 | 198 | 543 | 693 | 3,115 | 3,115 |
| Peak Hour Link Volume - Future Model | 1,767 | 1,126 | 1,152 | 1,835 | 545 | 454 | 707 | 757 | 4,171 | 4,171 |
| Base to Future Model Growth - Ratio | 0.31 | 0.10 | 0.21 | 0.53 | 1.03 | 1.29 | 0.30 | 0.09 | | |
| Pro-rate Ratio - 2015 to 2035 | 0.74 | 0.74 | 0.74 | 0.74 | 0.74 | 0.74 | 0.74 | 0.74 | | |
| Peak Hour Link Volume - Base Count (Existing) | 1,530 | 1,208 | 968 | 1,160 | 460 | 453 | 403 | 540 | 3,361 | 3,361 |
| Ratio (Adj Base Model/Count) | 0.96 | 0.87 | 1.03 | 1.18 | 0.74 | 0.58 | 1.45 | 1.31 | | |
| Difference (Count-Adj Base Model) | 68 | 158 | -34 | -205 | 120 | 188 | -182 | -170 | | |
| Adj. Base to Future Model Growth - Ratio | 1.21 | 1.07 | 1.15 | 1.34 | 1.60 | 1.72 | 1.21 | 1.07 | | |
| Minimum Growth % (Existing to Buildout) | 0% | 0% | 0% | 0% | 0% | 0% | 0% | 0% | | |
| Minimum Link Volume - Future | 0 | 0 | 0 | 0 | 0 | 0 | 0 | 0 | | |
| Peak Hour Link Volume - Ratio Adjusted | 1,850 | 1,295 | 1,114 | 1,559 | 737 | 778 | 486 | 576 | 4,187 | 4,208 |
| Peak Hour Link Volume - Difference Adjusted | 1,836 | 1,284 | 1,119 | 1,630 | 665 | 643 | 524 | 587 | 4,143 | 4,143 |
| Peak Hour Link Volume - Combined Adjusted | 1,843 | 1,290 | 1,116 | 1,595 | 701 | 710 | 505 | 581 | 4,165 | 4,176 |
| Growth Method (Ratio/Difference/Combined/Model) | D | D | D | D | D | D | D | D | | |
| Link Volume Adjustment (increase only) | 0 | 0 | 0 | 0 | 0 | 0 | 0 | 0 | | |
| Post-Processed Link Volume | 1,840 | 1,280 | 1,120 | 1,630 | 660 | 640 | 520 | 590 | 4,140 | 4,140 |

| | NB | | | SB | | | EB | | | WB | | |
|---|---|---|---|---|---|---|---|---|---|---|---|---|
| | Left | Thru | Right | Left | Thru | Right | Left | Thru | Right | Left | Thru | Right |
| 2015 Existing Turning Movement | 228 | 1051 | 251 | 46 | 871 | 51 | 72 | 243 | 145 | 192 | 174 | 37 |
| Project Only Turning Movement | 16 | 16 | 0 | 0 | 11 | 0 | 0 | 0 | 11 | 0 | 0 | 0 |
| Base Turning Movement Adjustment | 0 | 0 | 0 | 0 | 0 | 0 | 0 | 0 | 0 | 0 | 0 | 0 |
| Starting Turning Movement Volumes | 244 | 1051 | 251 | 46 | 871 | 51 | 72 | 243 | 145 | 192 | 174 | 37 |
| **2035 With Project** | **262** | **1386** | **192** | **64** | **955** | **100** | **170** | **334** | **156** | **171** | **277** | **72** |
| Difference (Delta With Project) | 34 | 335 | -59 | 18 | 84 | 49 | 98 | 91 | 11 | -21 | 103 | 35 |
| Difference (%) | 15% | 32% | -24% | 39% | 10% | 96% | 136% | 37% | 8% | -11% | 59% | 95% |
| **2035 Without Project** | **246** | **1370** | **192** | **64** | **944** | **100** | **170** | **334** | **145** | **171** | **277** | **72** |
| Difference (Delta Without Project) | 18 | 319 | -59 | 18 | 73 | 49 | 98 | 91 | 0 | -21 | 103 | 35 |
| Difference (%) | 8% | 30% | -24% | 39% | 8% | 96% | 136% | 37% | 0% | -11% | 59% | 95% |

# VALLEY CORRIDOR SPECIFIC PLAN
## YEAR 2035

### 2. Sierra Avenue / Valley Boulevard

| | | | |
|---|---|---|---|
| Base Count Year | 2015 | AM Peak Period Factor | 0.38 |
| Base Model Year | 2008 | PM Peak Period Factor | 0.28 |
| Future Model Year | 2035 | | |

**AM Peak**

| | NB | | SB | | EB | | WB | | Total | |
|---|---|---|---|---|---|---|---|---|---|---|
| | In | Out | In | Out | In | Out | In | Out | In | Out |
| Peak Period Link Volume - Base Model | 5,284 | 5,783 | 3,797 | 3,955 | 1,056 | 990 | 1,488 | 897 | 11,625 | 11,625 |
| Peak Period Link Volume - Future Model | 5,339 | 6,743 | 5,320 | 4,247 | 1,113 | 1,411 | 1,334 | 705 | 13,106 | 13,106 |
| Peak Hour Link Volume - Base Model | 2,008 | 2,198 | 1,443 | 1,503 | 401 | 376 | 565 | 341 | 4,418 | 4,418 |
| Peak Hour Link Volume - Future Model | 2,029 | 2,562 | 2,022 | 1,614 | 423 | 536 | 507 | 268 | 4,980 | 4,980 |
| Base to Future Model Growth - Ratio | 0.01 | 0.17 | 0.40 | 0.07 | 0.05 | 0.43 | -0.10 | -0.21 | | |
| Pro-rate Ratio - 2015 to 2035 | 0.74 | 0.74 | 0.74 | 0.74 | 0.74 | 0.74 | 0.74 | 0.74 | | |
| Peak Hour Link Volume - Base Count (Existing) | 2,202 | 2,135 | 1,384 | 1,278 | 629 | 543 | 987 | 1,246 | 5,202 | 5,202 |
| Ratio (Adj Base Model/Count) | 0.91 | 1.07 | 1.15 | 1.20 | 0.65 | 0.77 | 0.56 | 0.26 | | |
| Difference (Count-Adj Base Model) | 189 | -157 | -209 | -254 | 222 | 125 | 422 | 905 | | |
| Adj. Base to Future Model Growth - Ratio | 1.01 | 1.12 | 1.27 | 1.05 | 1.04 | 1.28 | 0.92 | 0.83 | | |
| Minimum Growth % (Existing to Buildout) | 0% | 0% | 0% | 0% | 0% | 0% | 0% | 0% | | |
| Minimum Link Volume - Future | 0 | 0 | 0 | 0 | 0 | 0 | 0 | 0 | | |
| Peak Hour Link Volume - Ratio Adjusted | 2,219 | 2,387 | 1,757 | 1,347 | 654 | 697 | 909 | 1,037 | 5,539 | 5,467 |
| Peak Hour Link Volume - Difference Adjusted | 2,218 | 2,405 | 1,813 | 1,360 | 645 | 662 | 928 | 1,173 | 5,604 | 5,600 |
| Peak Hour Link Volume - Combined Adjusted | 2,218 | 2,396 | 1,785 | 1,353 | 649 | 679 | 919 | 1,105 | 5,571 | 5,534 |
| Growth Method (Ratio/Difference/Combined/Model) | D | D | D | D | D | D | R | R | | |
| Link Volume Adjustment (increase only) | 0 | 0 | 0 | 0 | 0 | 0 | 0 | 120 | | |
| Post-Processed Link Volume | 2,220 | 2,410 | 1,810 | 1,360 | 650 | 660 | 910 | 1,160 | 5,590 | 5,590 |

| | NB | | | SB | | | EB | | | WB | | |
|---|---|---|---|---|---|---|---|---|---|---|---|---|
| | Left | Thru | Right | Left | Thru | Right | Left | Thru | Right | Left | Thru | Right |
| 2015 Existing Turning Movement | 169 | 1085 | 948 | 58 | 1252 | 74 | 96 | 240 | 293 | 590 | 300 | 97 |
| Project Only Turning Movement | 0 | 0 | 195 | 34 | 0 | 0 | 0 | 5 | 0 | 114 | 10 | 15 |
| Turning Movement Volume Adjustment | 0 | 0 | 0 | 0 | 0 | 0 | 0 | 0 | 0 | 0 | 0 | 0 |
| Starting Point - Turning Movement Volumes | 169 | 1085 | 948 | 58 | 1252 | 74 | 96 | 240 | 293 | 590 | 300 | 97 |
| **2035 With Project** | **210** | **1156** | **854** | **70** | **1616** | **124** | **111** | **234** | **304** | **494** | **326** | **90** |
| Difference (Delta With Project) | 41 | 71 | -94 | 12 | 364 | 50 | 15 | -6 | 11 | -96 | 26 | -7 |
| Difference (%) | 24% | 7% | -10% | 21% | 29% | 68% | 16% | -3% | 4% | -16% | 9% | -7% |
| **2035 Without Project** | **210** | **1156** | **659** | **36** | **1616** | **124** | **111** | **229** | **304** | **380** | **316** | **75** |
| Difference (Delta Without Project) | 41 | 71 | -289 | -22 | 364 | 50 | 15 | -11 | 11 | -210 | 16 | -22 |
| Difference (%) | 24% | 7% | -30% | -38% | 29% | 68% | 16% | -5% | 4% | -36% | 5% | -23% |

**PM Peak**

| | NB | | SB | | EB | | WB | | Total | |
|---|---|---|---|---|---|---|---|---|---|---|
| | In | Out | In | Out | In | Out | In | Out | In | Out |
| Peak Period Link Volume - Base Model | 9,448 | 8,387 | 5,934 | 6,112 | 1,928 | 1,938 | 1,786 | 2,661 | 19,096 | 19,098 |
| Peak Period Link Volume - Future Model | 11,761 | 8,378 | 6,489 | 7,974 | 1,873 | 2,350 | 1,304 | 2,725 | 21,427 | 21,427 |
| Peak Hour Link Volume - Base Model | 2,645 | 2,348 | 1,662 | 1,711 | 540 | 543 | 500 | 745 | 5,347 | 5,347 |
| Peak Hour Link Volume - Future Model | 3,293 | 2,346 | 1,817 | 2,233 | 524 | 658 | 365 | 763 | 6,000 | 6,000 |
| Base to Future Model Growth - Ratio | 0.25 | 0.00 | 0.09 | 0.31 | -0.03 | 0.21 | -0.27 | 0.02 | | |
| Pro-rate Ratio - 2015 to 2035 | 0.74 | 0.74 | 0.74 | 0.74 | 0.74 | 0.74 | 0.74 | 0.74 | | |
| Peak Hour Link Volume - Base Count (Existing) | 2,410 | 2,330 | 1,685 | 1,642 | 1,010 | 979 | 1,427 | 1,581 | 6,532 | 6,532 |
| Ratio (Adj Base Model/Count) | 1.17 | 1.01 | 1.01 | 1.12 | 0.53 | 0.58 | 0.33 | 0.47 | | |
| Difference (Count-Adj Base Model) | -403 | -18 | -17 | -205 | 470 | 406 | 927 | 831 | | |
| Adj. Base to Future Model Growth - Ratio | 1.17 | 1.00 | 1.07 | 1.21 | 0.98 | 1.15 | 0.79 | 1.02 | | |
| Minimum Growth % (Existing to Buildout) | 0% | 0% | 0% | 0% | 0% | 0% | 0% | 0% | | |
| Minimum Link Volume - Future | 0 | 0 | 0 | 0 | 0 | 0 | 0 | 0 | | |
| Peak Hour Link Volume - Ratio Adjusted | 2,821 | 2,328 | 1,799 | 1,985 | 989 | 1,125 | 1,120 | 1,609 | 6,729 | 7,047 |
| Peak Hour Link Volume - Difference Adjusted | 2,890 | 2,327 | 1,800 | 2,028 | 995 | 1,064 | 1,292 | 1,594 | 6,976 | 7,014 |
| Peak Hour Link Volume - Combined Adjusted | 2,855 | 2,328 | 1,799 | 2,007 | 992 | 1,095 | 1,206 | 1,602 | 6,852 | 7,031 |
| Growth Method (Ratio/Difference/Combined/Model) | D | D | D | D | R | D | R | D | | |
| Link Volume Adjustment (increase only) | 0 | 0 | 0 | 0 | 100 | 0 | 110 | 0 | | |
| Post-Processed Link Volume | 2,890 | 2,330 | 1,800 | 2,030 | 1,090 | 1,060 | 1,230 | 1,590 | 7,010 | 7,010 |

| | NB | | | SB | | | EB | | | WB | | |
|---|---|---|---|---|---|---|---|---|---|---|---|---|
| | Left | Thru | Right | Left | Thru | Right | Left | Thru | Right | Left | Thru | Right |
| 2015 Existing Turning Movement | 315 | 1188 | 907 | 188 | 1325 | 172 | 194 | 486 | 330 | 675 | 492 | 260 |
| Project Only Turning Movement | 0 | 0 | 119 | 31 | 0 | 0 | 0 | 4 | 0 | 217 | 3 | 46 |
| Base Turning Movement Adjustment | 0 | 0 | 0 | 0 | 0 | 0 | 0 | 0 | 0 | 0 | 0 | 0 |
| Starting Turning Movement Volumes | 315 | 1188 | 907 | 188 | 1325 | 172 | 194 | 486 | 330 | 675 | 492 | 260 |
| **2035 With Project** | **408** | **1548** | **934** | **178** | **1418** | **205** | **242** | **479** | **369** | **549** | **445** | **236** |
| Difference (Delta With Project) | 93 | 360 | 27 | -10 | 93 | 33 | 48 | -7 | 39 | -126 | -47 | -24 |
| Difference (%) | 30% | 30% | 3% | -5% | 7% | 19% | 25% | -1% | 12% | -19% | -10% | -9% |
| **2035 Without Project** | **408** | **1548** | **815** | **147** | **1418** | **205** | **242** | **475** | **369** | **332** | **442** | **190** |
| Difference (Delta Without Project) | 93 | 360 | -92 | -41 | 93 | 33 | 48 | -11 | 39 | -343 | -50 | -70 |
| Difference (%) | 30% | 30% | -10% | -22% | 7% | 19% | 25% | -2% | 12% | -51% | -10% | -27% |

# VALLEY CORRIDOR SPECIFIC PLAN
## YEAR 2035

### 3. Sierra Avenue / I-10 Ramps

| | | | |
|---|---|---|---|
| Base Count Year | 2015 | AM Peak Period Factor | 0.38 |
| Base Model Year | 2008 | PM Peak Period Factor | 0.28 |
| Future Model Year | 2035 | | |

**AM Peak**

| | NB | | SB | | EB | | WB | | Total | |
|---|---|---|---|---|---|---|---|---|---|---|
| | In | Out | In | Out | In | Out | In | Out | In | Out |
| Peak Period Link Volume - Base Model | 3,222 | 3,104 | 5,842 | 5,443 | 2,569 | 2,909 | 1,694 | 1,870 | 13,327 | 13,326 |
| Peak Period Link Volume - Future Model | 2,276 | 4,055 | 6,936 | 5,517 | 3,210 | 2,301 | 2,093 | 2,641 | 14,515 | 14,514 |
| Peak Hour Link Volume - Base Model | 1,224 | 1,180 | 2,220 | 2,068 | 976 | 1,105 | 644 | 711 | 5,064 | 5,064 |
| Peak Hour Link Volume - Future Model | 865 | 1,541 | 2,636 | 2,096 | 1,220 | 874 | 795 | 1,004 | 5,516 | 5,515 |
| Base to Future Model Growth - Ratio | -0.29 | 0.31 | 0.19 | 0.01 | 0.25 | -0.21 | 0.24 | 0.41 | | |
| Pro-rate Ratio - 2015 to 2035 | 0.74 | 0.74 | 0.74 | 0.74 | 0.74 | 0.74 | 0.74 | 0.74 | | |
| Peak Hour Link Volume - Base Count (Existing) | 1,674 | 1,527 | 2,085 | 2,153 | 1,147 | 1,260 | 1,073 | 1,039 | 5,979 | 5,979 |
| Ratio (Adj Base Model/Count) | 0.68 | 0.83 | 1.12 | 0.96 | 0.91 | 0.83 | 0.64 | 0.76 | | |
| Difference (Count-Adj Base Model) | 450 | 254 | -243 | 77 | 108 | 155 | 390 | 252 | | |
| Adj. Base to Future Model Growth - Ratio | 0.76 | 1.21 | 1.13 | 1.01 | 1.17 | 0.84 | 1.16 | 1.28 | | |
| Minimum Growth % (Existing to Buildout) | 0% | 0% | 0% | 0% | 0% | 0% | 0% | 0% | | |
| Minimum Link Volume - Future | 0 | 0 | 0 | 0 | 0 | 0 | 0 | 0 | | |
| Peak Hour Link Volume - Ratio Adjusted | 1,280 | 1,848 | 2,361 | 2,174 | 1,346 | 1,054 | 1,249 | 1,326 | 6,236 | 6,402 |
| Peak Hour Link Volume - Difference Adjusted | 1,315 | 1,795 | 2,393 | 2,174 | 1,327 | 1,029 | 1,185 | 1,256 | 6,220 | 6,253 |
| Peak Hour Link Volume - Combined Adjusted | 1,297 | 1,822 | 2,377 | 2,174 | 1,337 | 1,041 | 1,217 | 1,291 | 6,228 | 6,328 |
| Growth Method (Ratio/Difference/Combined/Model) | R | D | D | D | D | R | D | D | | |
| Link Volume Adjustment (increase only) | 80 | 0 | 0 | 0 | 0 | 0 | 0 | 0 | | |
| Post-Processed Link Volume | 1,360 | 1,790 | 2,390 | 2,170 | 1,330 | 1,050 | 1,190 | 1,260 | 6,270 | 6,270 |

| | NB | | | SB | | | EB | | | WB | | |
|---|---|---|---|---|---|---|---|---|---|---|---|---|
| | Left | Thru | Right | Left | Thru | Right | Left | Thru | Right | Left | Thru | Right |
| 2015 Existing Turning Movement | 390 | 775 | 509 | 530 | 685 | 870 | 821 | 0 | 326 | 516 | 0 | 557 |
| Project Only Turning Movement | 0 | 33 | 0 | 0 | 23 | 91 | 162 | 0 | 0 | -1 | 0 | 0 |
| Turning Movement Volume Adjustment | 0 | 0 | 0 | 0 | 0 | 0 | 0 | 0 | 0 | 0 | 0 | 0 |
| Starting Point - Turning Movement Volumes | 390 | 775 | 509 | 530 | 685 | 870 | 821 | 0 | 326 | 516 | 0 | 557 |
| **2035 With Project** | **247** | **614** | **500** | **762** | **821** | **806** | **943** | **0** | **387** | **582** | **0** | **608** |
| Difference (Delta With Project) | -143 | -161 | -9 | 232 | 136 | -64 | 122 | 0 | 61 | 66 | 0 | 51 |
| Difference (%) | -37% | -21% | -2% | 44% | 20% | -7% | 15% | 0% | 19% | 13% | 0% | 9% |
| **2035 Without Project** | **247** | **581** | **500** | **762** | **798** | **715** | **781** | **0** | **387** | **583** | **0** | **608** |
| Difference (Delta Without Project) | -143 | -194 | -9 | 232 | 113 | -155 | -40 | 0 | 61 | 67 | 0 | 51 |
| Difference (%) | -37% | -25% | -2% | 44% | 16% | -18% | -5% | 0% | 19% | 13% | 0% | 9% |

**PM Peak**

| | NB | | SB | | EB | | WB | | Total | |
|---|---|---|---|---|---|---|---|---|---|---|
| | In | Out | In | Out | In | Out | In | Out | In | Out |
| Peak Period Link Volume - Base Model | 5,159 | 5,479 | 8,553 | 9,679 | 5,437 | 3,546 | 2,498 | 2,943 | 21,647 | 21,647 |
| Peak Period Link Volume - Future Model | 4,947 | 4,884 | 8,556 | 11,965 | 5,626 | 2,960 | 3,711 | 3,032 | 22,840 | 22,841 |
| Peak Hour Link Volume - Base Model | 1,445 | 1,534 | 2,395 | 2,710 | 1,522 | 993 | 699 | 824 | 6,061 | 6,061 |
| Peak Hour Link Volume - Future Model | 1,385 | 1,368 | 2,396 | 3,350 | 1,575 | 829 | 1,039 | 849 | 6,395 | 6,395 |
| Base to Future Model Growth - Ratio | -0.04 | -0.11 | 0.00 | 0.24 | 0.03 | -0.17 | 0.49 | 0.03 | | |
| Pro-rate Ratio - 2015 to 2035 | 0.74 | 0.74 | 0.74 | 0.74 | 0.74 | 0.74 | 0.74 | 0.74 | | |
| Peak Hour Link Volume - Base Count (Existing) | 2,100 | 1,954 | 2,536 | 2,389 | 1,239 | 1,247 | 1,004 | 1,289 | 6,879 | 6,879 |
| Ratio (Adj Base Model/Count) | 0.68 | 0.76 | 0.94 | 1.20 | 1.24 | 0.76 | 0.78 | 0.64 | | |
| Difference (Count-Adj Base Model) | 655 | 420 | 141 | -487 | -297 | 254 | 216 | 459 | | |
| Adj. Base to Future Model Growth - Ratio | 0.97 | 0.92 | 1.00 | 1.16 | 1.03 | 0.87 | 1.32 | 1.02 | | |
| Minimum Growth % (Existing to Buildout) | 0% | 0% | 0% | 0% | 0% | 0% | 0% | 0% | | |
| Minimum Link Volume - Future | 0 | 0 | 0 | 0 | 0 | 0 | 0 | 0 | | |
| Peak Hour Link Volume - Ratio Adjusted | 2,035 | 1,792 | 2,537 | 2,783 | 1,271 | 1,087 | 1,325 | 1,318 | 7,167 | 6,981 |
| Peak Hour Link Volume - Difference Adjusted | 2,041 | 1,787 | 2,537 | 2,863 | 1,278 | 1,083 | 1,256 | 1,308 | 7,111 | 7,041 |
| Peak Hour Link Volume - Combined Adjusted | 2,038 | 1,790 | 2,537 | 2,823 | 1,274 | 1,085 | 1,290 | 1,313 | 7,139 | 7,011 |
| Growth Method (Ratio/Difference/Combined/Model) | R | R | D | D | D | R | D | D | | |
| Link Volume Adjustment (increase only) | 0 | 0 | 0 | 0 | 0 | 70 | 0 | 0 | | |
| Post-Processed Link Volume | 2,040 | 1,790 | 2,540 | 2,860 | 1,280 | 1,160 | 1,260 | 1,310 | 7,120 | 7,120 |

| | NB | | | SB | | | EB | | | WB | | |
|---|---|---|---|---|---|---|---|---|---|---|---|---|
| | Left | Thru | Right | Left | Thru | Right | Left | Thru | Right | Left | Thru | Right |
| 2015 Existing Turning Movement | 369 | 1078 | 653 | 636 | 1022 | 878 | 767 | 0 | 472 | 460 | 0 | 544 |
| Project Only Turning Movement | 0 | 32 | -1 | 0 | 40 | 177 | 87 | 0 | 0 | -1 | 0 | 0 |
| Base Turning Movement Adjustment | 0 | 0 | 0 | 0 | 0 | 0 | 0 | 0 | 0 | 0 | 0 | 0 |
| Starting Turning Movement Volumes | 369 | 1078 | 653 | 636 | 1022 | 878 | 767 | 0 | 472 | 460 | 0 | 544 |
| **2035 With Project** | **292** | **1157** | **591** | **722** | **947** | **871** | **899** | **0** | **381** | **463** | **0** | **797** |
| Difference (Delta With Project) | -77 | 79 | -62 | 86 | -75 | -7 | 132 | 0 | -91 | 3 | 0 | 253 |
| Difference (%) | -21% | 7% | -9% | 14% | -7% | -1% | 17% | 0% | -19% | 1% | 0% | 47% |
| **2035 Without Project** | **292** | **1125** | **592** | **722** | **907** | **694** | **812** | **0** | **381** | **464** | **0** | **797** |
| Difference (Delta Without Project) | -77 | 47 | -61 | 86 | -115 | -184 | 45 | 0 | -91 | 4 | 0 | 253 |
| Difference (%) | -21% | 4% | -9% | 14% | -11% | -21% | 6% | 0% | -19% | 1% | 0% | 47% |

# VALLEY CORRIDOR SPECIFIC PLAN
## YEAR 2035

### 4. Sierra Avenue / Slover Avenue

| | | | |
|---|---|---|---|
| Base Count Year | 2015 | AM Peak Period Factor | 0.38 |
| Base Model Year | 2008 | PM Peak Period Factor | 0.28 |
| Future Model Year | 2035 | | |

**AM Peak**

| | NB | | SB | | EB | | WB | | Total | |
|---|---|---|---|---|---|---|---|---|---|---|
| | In | Out | In | Out | In | Out | In | Out | In | Out |
| Peak Period Link Volume - Base Model | 2,974 | 2,110 | 3,018 | 3,070 | 530 | 1,166 | 856 | 1,032 | 7,378 | 7,378 |
| Peak Period Link Volume - Future Model | 2,745 | 3,322 | 3,931 | 2,162 | 1,168 | 1,955 | 1,102 | 1,506 | 8,946 | 8,945 |
| Peak Hour Link Volume - Base Model | 1,130 | 802 | 1,147 | 1,167 | 201 | 443 | 325 | 392 | 2,804 | 2,804 |
| Peak Hour Link Volume - Future Model | 1,043 | 1,262 | 1,494 | 822 | 444 | 743 | 419 | 572 | 3,399 | 3,399 |
| Base to Future Model Growth - Ratio | -0.08 | 0.57 | 0.30 | -0.30 | 1.20 | 0.68 | 0.29 | 0.46 | | |
| Pro-rate Ratio - 2015 to 2035 | 0.74 | 0.74 | 0.74 | 0.74 | 0.74 | 0.74 | 0.74 | 0.74 | | |
| Peak Hour Link Volume - Base Count (Existing) | 1,284 | 829 | 1,431 | 1,704 | 498 | 496 | 587 | 771 | 3,800 | 3,800 |
| Ratio (Adj Base Model/Count) | 0.86 | 1.11 | 0.86 | 0.63 | 0.53 | 1.05 | 0.60 | 0.57 | | |
| Difference (Count-Adj Base Model) | 154 | -92 | 194 | 537 | 234 | -25 | 238 | 332 | | |
| Adj. Base to Future Model Growth - Ratio | 0.94 | 1.37 | 1.21 | 0.76 | 1.68 | 1.43 | 1.20 | 1.30 | | |
| Minimum Growth % (Existing to Buildout) | 0% | 0% | 0% | 0% | 0% | 0% | 0% | 0% | | |
| Minimum Link Volume - Future | 0 | 0 | 0 | 0 | 0 | 0 | 0 | 0 | | |
| Peak Hour Link Volume - Ratio Adjusted | 1,209 | 1,136 | 1,728 | 1,300 | 836 | 707 | 703 | 1,005 | 4,477 | 4,149 |
| Peak Hour Link Volume - Difference Adjusted | 1,197 | 1,170 | 1,688 | 1,359 | 678 | 718 | 656 | 904 | 4,219 | 4,152 |
| Peak Hour Link Volume - Combined Adjusted | 1,203 | 1,153 | 1,708 | 1,329 | 757 | 713 | 680 | 955 | 4,348 | 4,150 |
| Growth Method (Ratio/Difference/Combined/Model) | R | D | D | R | D | D | D | D | | |
| Link Volume Adjustment (increase only) | 0 | 0 | 0 | 150 | 0 | 0 | 0 | 0 | | |
| Post-Processed Link Volume | 1,210 | 1,170 | 1,690 | 1,450 | 680 | 720 | 660 | 900 | 4,240 | 4,240 |

| | NB | | | SB | | | EB | | | WB | | |
|---|---|---|---|---|---|---|---|---|---|---|---|---|
| | Left | Thru | Right | Left | Thru | Right | Left | Thru | Right | Left | Thru | Right |
| 2015 Existing Turning Movement | 93 | 1079 | 112 | 486 | 716 | 229 | 276 | 173 | 49 | 64 | 174 | 349 |
| Project Only Turning Movement | 0 | 22 | 0 | 0 | 17 | 5 | 11 | 0 | 0 | 0 | 0 | 0 |
| Turning Movement Volume Adjustment | 0 | 0 | 0 | 0 | 0 | 0 | 0 | 0 | 0 | 0 | 0 | 0 |
| Starting Point - Turning Movement Volumes | 93 | 1079 | 112 | 486 | 716 | 229 | 276 | 173 | 49 | 64 | 174 | 349 |
| **2035 With Project** | **160** | **899** | **150** | **464** | **946** | **281** | **283** | **285** | **112** | **111** | **279** | **270** |
| Difference (Delta With Project) | 67 | -180 | 38 | -22 | 230 | 52 | 7 | 112 | 63 | 47 | 105 | -79 |
| Difference (%) | 72% | -17% | 34% | -5% | 32% | 23% | 3% | 65% | 129% | 73% | 60% | -23% |
| **2035 Without Project** | **160** | **877** | **150** | **464** | **929** | **276** | **272** | **285** | **112** | **111** | **279** | **270** |
| Difference (Delta Without Project) | 67 | -202 | 38 | -22 | 213 | 47 | -4 | 112 | 63 | 47 | 105 | -79 |
| Difference (%) | 72% | -19% | 34% | -5% | 30% | 21% | -1% | 65% | 129% | 73% | 60% | -23% |

**PM Peak**

| | NB | | SB | | EB | | WB | | Total | |
|---|---|---|---|---|---|---|---|---|---|---|
| | In | Out | In | Out | In | Out | In | Out | In | Out |
| Peak Period Link Volume - Base Model | 3,920 | 3,776 | 5,248 | 4,980 | 1,300 | 1,676 | 1,670 | 1,706 | 12,138 | 12,138 |
| Peak Period Link Volume - Future Model | 4,806 | 4,580 | 4,683 | 4,732 | 2,419 | 2,954 | 2,428 | 2,070 | 14,336 | 14,336 |
| Peak Hour Link Volume - Base Model | 1,098 | 1,057 | 1,469 | 1,394 | 364 | 469 | 468 | 478 | 3,399 | 3,399 |
| Peak Hour Link Volume - Future Model | 1,346 | 1,282 | 1,311 | 1,325 | 677 | 827 | 680 | 580 | 4,014 | 4,014 |
| Base to Future Model Growth - Ratio | 0.23 | 0.21 | -0.11 | -0.05 | 0.86 | 0.76 | 0.45 | 0.21 | | |
| Pro-rate Ratio - 2015 to 2035 | 0.74 | 0.74 | 0.74 | 0.74 | 0.74 | 0.74 | 0.74 | 0.74 | | |
| Peak Hour Link Volume - Base Count (Existing) | 1,390 | 1,347 | 1,809 | 2,133 | 844 | 540 | 1,274 | 1,297 | 5,317 | 5,317 |
| Ratio (Adj Base Model/Count) | 0.84 | 0.83 | 0.79 | 0.65 | 0.53 | 1.04 | 0.41 | 0.39 | | |
| Difference (Count-Adj Base Model) | 228 | 231 | 340 | 739 | 399 | -22 | 751 | 793 | | |
| Adj. Base to Future Model Growth - Ratio | 1.16 | 1.15 | 0.92 | 0.96 | 1.52 | 1.47 | 1.30 | 1.15 | | |
| Minimum Growth % (Existing to Buildout) | 0% | 0% | 0% | 0% | 0% | 0% | 0% | 0% | | |
| Minimum Link Volume - Future | 0 | 0 | 0 | 0 | 0 | 0 | 0 | 0 | | |
| Peak Hour Link Volume - Ratio Adjusted | 1,610 | 1,548 | 1,661 | 2,053 | 1,284 | 795 | 1,657 | 1,491 | 6,212 | 5,888 |
| Peak Hour Link Volume - Difference Adjusted | 1,574 | 1,514 | 1,651 | 2,064 | 1,076 | 805 | 1,431 | 1,373 | 5,732 | 5,755 |
| Peak Hour Link Volume - Combined Adjusted | 1,592 | 1,531 | 1,656 | 2,058 | 1,180 | 800 | 1,544 | 1,432 | 5,972 | 5,821 |
| Growth Method (Ratio/Difference/Combined/Model) | D | D | R | R | D | D | D | D | | |
| Link Volume Adjustment (increase only) | 0 | 0 | 0 | 0 | 0 | 0 | 0 | 0 | | |
| Post-Processed Link Volume | 1,570 | 1,510 | 1,660 | 2,050 | 1,080 | 810 | 1,430 | 1,370 | 5,740 | 5,740 |

| | NB | | | SB | | | EB | | | WB | | |
|---|---|---|---|---|---|---|---|---|---|---|---|---|
| | Left | Thru | Right | Left | Thru | Right | Left | Thru | Right | Left | Thru | Right |
| 2015 Existing Turning Movement | 144 | 1047 | 199 | 668 | 1001 | 140 | 302 | 430 | 112 | 234 | 256 | 784 |
| Project Only Turning Movement | 0 | 20 | 0 | 0 | 23 | 16 | 11 | 0 | 0 | 0 | 0 | 0 |
| Base Turning Movement Adjustment | 0 | 0 | 0 | 0 | 0 | 0 | 0 | 0 | 0 | 0 | 0 | 0 |
| Starting Turning Movement Volumes | 144 | 1047 | 199 | 668 | 1001 | 140 | 302 | 430 | 112 | 234 | 256 | 784 |
| **2035 With Project** | **258** | **1051** | **261** | **527** | **983** | **150** | **311** | **580** | **188** | **336** | **403** | **691** |
| Difference (Delta With Project) | 114 | 4 | 62 | -141 | -18 | 10 | 9 | 150 | 76 | 102 | 147 | -93 |
| Difference (%) | 79% | 0% | 31% | -21% | -2% | 7% | 3% | 35% | 68% | 44% | 57% | -12% |
| **2035 Without Project** | **258** | **1031** | **261** | **527** | **960** | **134** | **300** | **580** | **188** | **336** | **403** | **691** |
| Difference (Delta Without Project) | 114 | -16 | 62 | -141 | -41 | -6 | -2 | 150 | 76 | 102 | 147 | -93 |
| Difference (%) | 79% | -2% | 31% | -21% | -4% | -4% | -1% | 35% | 68% | 44% | 57% | -12% |

# VALLEY CORRIDOR SPECIFIC PLAN
## YEAR 2035

### 5. Palmetto Avenue / Valley Boulevard

| | | | |
|---|---|---|---|
| Base Count Year | 2015 | AM Peak Period Factor | 0.38 |
| Base Model Year | 2008 | PM Peak Period Factor | 0.28 |
| Future Model Year | 2035 | | |

**AM Peak**

| | NB | | SB | | EB | | WB | | Total | |
|---|---|---|---|---|---|---|---|---|---|---|
| | In | Out | In | Out | In | Out | In | Out | In | Out |
| Peak Period Link Volume - Base Model | 0 | 0 | 112 | 57 | 894 | 1,485 | 1,483 | 947 | 2,489 | 2,489 |
| Peak Period Link Volume - Future Model | 0 | 0 | 225 | 195 | 702 | 1,331 | 1,482 | 884 | 2,409 | 2,410 |
| Peak Hour Link Volume - Base Model | 0 | 0 | 43 | 22 | 340 | 564 | 564 | 360 | 946 | 946 |
| Peak Hour Link Volume - Future Model | 0 | 0 | 86 | 74 | 267 | 506 | 563 | 336 | 915 | 916 |
| Base to Future Model Growth - Ratio | 0.00 | 0.00 | 1.01 | 2.42 | -0.22 | -0.10 | 0.00 | -0.07 | | |
| Pro-rate Ratio - 2015 to 2035 | 0.74 | 0.74 | 0.74 | 0.74 | 0.74 | 0.74 | 0.74 | 0.74 | | |
| Peak Hour Link Volume - Base Count (Existing) | 0 | 0 | 293 | 170 | 495 | 790 | 561 | 389 | 1,349 | 1,349 |
| Ratio (Adj Base Model/Count) | 0.00 | 0.00 | 0.18 | 0.21 | 0.65 | 0.70 | 1.00 | 0.91 | | |
| Difference (Count-Adj Base Model) | 0 | 0 | 239 | 135 | 155 | 226 | -3 | 29 | | |
| Adj. Base to Future Model Growth - Ratio | 0.00 | 0.00 | 1.59 | 2.10 | 0.83 | 0.92 | 1.00 | 0.95 | | |
| Minimum Growth % (Existing to Buildout) | 0% | 0% | 0% | 0% | 0% | 0% | 0% | 0% | | |
| Minimum Link Volume - Future | 0 | 0 | 0 | 0 | 0 | 0 | 0 | 0 | | |
| Peak Hour Link Volume - Ratio Adjusted | 0 | 0 | 467 | 357 | 412 | 728 | 561 | 370 | 1,439 | 1,455 |
| Peak Hour Link Volume - Difference Adjusted | 0 | 0 | 325 | 209 | 422 | 731 | 561 | 365 | 1,307 | 1,305 |
| Peak Hour Link Volume - Combined Adjusted | 0 | 0 | 396 | 283 | 417 | 730 | 561 | 367 | 1,373 | 1,380 |
| Growth Method (Ratio/Difference/Combined/Model) | D | D | D | D | R | R | R | R | | |
| Link Volume Adjustment (increase only) | 0 | 0 | 0 | 0 | 20 | 0 | 0 | 0 | | |
| Post-Processed Link Volume | 0 | 0 | 320 | 210 | 430 | 730 | 560 | 370 | 1,310 | 1,310 |

| | NB | | | SB | | | EB | | | WB | | |
|---|---|---|---|---|---|---|---|---|---|---|---|---|
| | Left | Thru | Right | Left | Thru | Right | Left | Thru | Right | Left | Thru | Right |
| 2015 Existing Turning Movement | 0 | 0 | 0 | 31 | 0 | 262 | 137 | 358 | 0 | 0 | 528 | 33 |
| Project Only Turning Movement | 0 | 0 | 0 | 22 | 0 | 0 | 0 | 239 | 0 | 0 | 149 | 8 |
| Turning Movement Volume Adjustment | 0 | 0 | 0 | 0 | 0 | 0 | 0 | 0 | 0 | 0 | 0 | 0 |
| Starting Point - Turning Movement Volumes | 0 | 0 | 0 | 31 | 0 | 262 | 137 | 358 | 0 | 0 | 528 | 33 |
| **2035 With Project** | **0** | **0** | **0** | **70** | **0** | **250** | **130** | **300** | **0** | **0** | **480** | **80** |
| Difference (Delta With Project) | 0 | 0 | 0 | 39 | 0 | -12 | -7 | -58 | 0 | 0 | -48 | 47 |
| Difference (%) | 0% | 0% | 0% | 126% | 0% | -5% | -5% | -16% | 0% | 0% | -9% | 142% |
| **2035 Without Project** | **0** | **0** | **0** | **48** | **0** | **250** | **130** | **61** | **0** | **0** | **331** | **72** |
| Difference (Delta Without Project) | 0 | 0 | 0 | 17 | 0 | -12 | -7 | -297 | 0 | 0 | -197 | 39 |
| Difference (%) | 0% | 0% | 0% | 55% | 0% | -5% | -5% | -83% | 0% | 0% | -37% | 118% |

**PM Peak**

| | NB | | SB | | EB | | WB | | Total | |
|---|---|---|---|---|---|---|---|---|---|---|
| | In | Out | In | Out | In | Out | In | Out | In | Out |
| Peak Period Link Volume - Base Model | 0 | 0 | 199 | 440 | 2,657 | 1,782 | 1,887 | 2,520 | 4,743 | 4,742 |
| Peak Period Link Volume - Future Model | 0 | 0 | 483 | 724 | 2,721 | 1,300 | 1,555 | 2,734 | 4,759 | 4,758 |
| Peak Hour Link Volume - Base Model | 0 | 0 | 56 | 123 | 744 | 499 | 528 | 706 | 1,328 | 1,328 |
| Peak Hour Link Volume - Future Model | 0 | 0 | 135 | 203 | 762 | 364 | 435 | 766 | 1,333 | 1,332 |
| Base to Future Model Growth - Ratio | 0.00 | 0.00 | 1.43 | 0.65 | 0.02 | -0.27 | -0.18 | 0.09 | | |
| Pro-rate Ratio - 2015 to 2035 | 0.74 | 0.74 | 0.74 | 0.74 | 0.74 | 0.74 | 0.74 | 0.74 | | |
| Peak Hour Link Volume - Base Count (Existing) | 0 | 0 | 219 | 389 | 1,356 | 716 | 630 | 1,100 | 2,205 | 2,205 |
| Ratio (Adj Base Model/Count) | 0.00 | 0.00 | 0.35 | 0.37 | 0.55 | 0.65 | 0.80 | 0.66 | | |
| Difference (Count-Adj Base Model) | 0 | 0 | 143 | 245 | 607 | 217 | 102 | 379 | | |
| Adj. Base to Future Model Growth - Ratio | 0.00 | 0.00 | 1.77 | 1.41 | 1.02 | 0.78 | 0.86 | 1.06 | | |
| Minimum Growth % (Existing to Buildout) | 0% | 0% | 0% | 0% | 0% | 0% | 0% | 0% | | |
| Minimum Link Volume - Future | 0 | 0 | 0 | 0 | 0 | 0 | 0 | 0 | | |
| Peak Hour Link Volume - Ratio Adjusted | 0 | 0 | 388 | 548 | 1,380 | 562 | 544 | 1,168 | 2,312 | 2,278 |
| Peak Hour Link Volume - Difference Adjusted | 0 | 0 | 278 | 448 | 1,369 | 581 | 537 | 1,144 | 2,184 | 2,173 |
| Peak Hour Link Volume - Combined Adjusted | 0 | 0 | 333 | 498 | 1,375 | 571 | 541 | 1,156 | 2,248 | 2,226 |
| Growth Method (Ratio/Difference/Combined/Model) | D | D | D | D | D | R | R | D | | |
| Link Volume Adjustment (increase only) | 0 | 0 | 0 | 0 | 0 | 40 | 0 | 0 | | |
| Post-Processed Link Volume | 0 | 0 | 280 | 450 | 1,370 | 600 | 540 | 1,140 | 2,190 | 2,190 |

| | NB | | | SB | | | EB | | | WB | | |
|---|---|---|---|---|---|---|---|---|---|---|---|---|
| | Left | Thru | Right | Left | Thru | Right | Left | Thru | Right | Left | Thru | Right |
| 2015 Existing Turning Movement | 0 | 0 | 0 | 63 | 0 | 156 | 319 | 1037 | 0 | 0 | 560 | 70 |
| Project Only Turning Movement | 0 | 0 | 0 | 16 | 0 | 0 | 0 | 157 | 0 | 0 | 269 | 22 |
| Base Turning Movement Adjustment | 0 | 0 | 0 | 0 | 0 | 0 | 0 | 0 | 0 | 0 | 0 | 0 |
| Starting Turning Movement Volumes | 0 | 0 | 0 | 63 | 0 | 156 | 319 | 1037 | 0 | 0 | 560 | 70 |
| **2035 With Project** | **0** | **0** | **0** | **115** | **0** | **165** | **346** | **1024** | **0** | **0** | **436** | **104** |
| Difference (Delta With Project) | 0 | 0 | 0 | 52 | 0 | 9 | 27 | -13 | 0 | 0 | -124 | 34 |
| Difference (%) | 0% | 0% | 0% | 83% | 0% | 6% | 8% | -1% | 0% | 0% | -22% | 49% |
| **2035 Without Project** | **0** | **0** | **0** | **99** | **0** | **165** | **346** | **867** | **0** | **0** | **167** | **82** |
| Difference (Delta Without Project) | 0 | 0 | 0 | 36 | 0 | 9 | 27 | -170 | 0 | 0 | -393 | 12 |
| Difference (%) | 0% | 0% | 0% | 57% | 0% | 6% | 8% | -16% | 0% | 0% | -70% | 17% |

# VALLEY CORRIDOR SPECIFIC PLAN
## YEAR 2035

### 6. Alder Avenue / San Bernardino Avenue

| | | | |
|---|---|---|---|
| Base Count Year | 2015 | AM Peak Period Factor | 0.38 |
| Base Model Year | 2008 | PM Peak Period Factor | 0.28 |
| Future Model Year | 2035 | | |

**AM Peak**

| | NB | | SB | | EB | | WB | | Total | |
|---|---|---|---|---|---|---|---|---|---|---|
| | In | Out | In | Out | In | Out | In | Out | In | Out |
| Peak Period Link Volume - Base Model | 427 | 592 | 1,455 | 755 | 465 | 1,135 | 595 | 460 | 2,942 | 2,942 |
| Peak Period Link Volume - Future Model | 908 | 2,044 | 2,079 | 984 | 860 | 1,174 | 1,096 | 741 | 4,943 | 4,943 |
| Peak Hour Link Volume - Base Model | 162 | 225 | 553 | 287 | 177 | 431 | 226 | 175 | 1,118 | 1,118 |
| Peak Hour Link Volume - Future Model | 345 | 777 | 790 | 374 | 327 | 446 | 416 | 282 | 1,878 | 1,878 |
| Base to Future Model Growth - Ratio | 1.13 | 2.45 | 0.43 | 0.30 | 0.85 | 0.03 | 0.84 | 0.61 | | |
| Pro-rate Ratio - 2015 to 2035 | 0.74 | 0.74 | 0.74 | 0.74 | 0.74 | 0.74 | 0.74 | 0.74 | | |
| Peak Hour Link Volume - Base Count (Existing) | 188 | 518 | 483 | 204 | 168 | 226 | 249 | 140 | 1,088 | 1,088 |
| Ratio (Adj Base Model/Count) | 1.12 | 0.71 | 1.27 | 1.52 | 1.28 | 1.93 | 1.11 | 1.45 | | |
| Difference (Count-Adj Base Model) | -22 | 150 | -131 | -105 | -48 | -209 | -26 | -62 | | |
| Adj. Base to Future Model Growth - Ratio | 1.65 | 2.11 | 1.29 | 1.21 | 1.52 | 1.03 | 1.51 | 1.39 | | |
| Minimum Growth % (Existing to Buildout) | 0% | 0% | 0% | 0% | 0% | 0% | 0% | 0% | | |
| Minimum Link Volume - Future | 0 | 0 | 0 | 0 | 0 | 0 | 0 | 0 | | |
| Peak Hour Link Volume - Ratio Adjusted | 309 | 1,093 | 621 | 247 | 255 | 232 | 376 | 195 | 1,562 | 1,766 |
| Peak Hour Link Volume - Difference Adjusted | 323 | 927 | 659 | 268 | 279 | 237 | 390 | 219 | 1,651 | 1,651 |
| Peak Hour Link Volume - Combined Adjusted | 316 | 1,010 | 640 | 257 | 267 | 234 | 383 | 207 | 1,606 | 1,709 |
| Growth Method (Ratio/Difference/Combined/Model) | D | D | D | D | D | D | D | D | | |
| Link Volume Adjustment (increase only) | 10 | 0 | 0 | 0 | 0 | 0 | 0 | 0 | | |
| Post-Processed Link Volume | 330 | 930 | 660 | 270 | 280 | 240 | 390 | 220 | 1,660 | 1,660 |

| | NB | | | SB | | | EB | | | WB | | |
|---|---|---|---|---|---|---|---|---|---|---|---|---|
| | Left | Thru | Right | Left | Thru | Right | Left | Thru | Right | Left | Thru | Right |
| 2015 Existing Turning Movement | 7 | 153 | 28 | 19 | 398 | 66 | 31 | 93 | 44 | 76 | 153 | 20 |
| Project Only Turning Movement | 5 | 15 | 0 | 0 | 37 | 0 | 0 | 0 | 11 | 0 | 0 | 0 |
| Turning Movement Volume Adjustment | 0 | 0 | 0 | 0 | 0 | 0 | 0 | 0 | 0 | 0 | 0 | 0 |
| Starting Point - Turning Movement Volumes | 7 | 153 | 28 | 19 | 398 | 66 | 31 | 93 | 44 | 76 | 153 | 20 |
| **2035 With Project** | **18** | **234** | **78** | **14** | **602** | **44** | **23** | **129** | **128** | **199** | **177** | **14** |
| Difference (Delta With Project) | 11 | 81 | 50 | -5 | 204 | -22 | -8 | 36 | 84 | 123 | 24 | -6 |
| Difference (%) | 157% | 53% | 179% | -26% | 51% | -33% | -26% | 39% | 191% | 162% | 16% | -30% |
| **2035 Without Project** | **13** | **219** | **78** | **14** | **565** | **44** | **23** | **129** | **117** | **199** | **177** | **14** |
| Difference (Delta Without Project) | 6 | 66 | 50 | -5 | 167 | -22 | -8 | 36 | 73 | 123 | 24 | -6 |
| Difference (%) | 86% | 43% | 179% | -26% | 42% | -33% | -26% | 39% | 166% | 162% | 16% | -30% |

**PM Peak**

| | NB | | SB | | EB | | WB | | Total | |
|---|---|---|---|---|---|---|---|---|---|---|
| | In | Out | In | Out | In | Out | In | Out | In | Out |
| Peak Period Link Volume - Base Model | 1,024 | 789 | 1,348 | 2,180 | 1,982 | 917 | 743 | 1,210 | 5,097 | 5,096 |
| Peak Period Link Volume - Future Model | 2,991 | 1,982 | 2,036 | 3,174 | 2,220 | 1,734 | 1,715 | 2,072 | 8,962 | 8,962 |
| Peak Hour Link Volume - Base Model | 287 | 221 | 377 | 610 | 555 | 257 | 208 | 339 | 1,427 | 1,427 |
| Peak Hour Link Volume - Future Model | 837 | 555 | 570 | 889 | 622 | 486 | 480 | 580 | 2,509 | 2,509 |
| Base to Future Model Growth - Ratio | 1.92 | 1.51 | 0.51 | 0.46 | 0.12 | 0.89 | 1.31 | 0.71 | | |
| Pro-rate Ratio - 2015 to 2035 | 0.74 | 0.74 | 0.74 | 0.74 | 0.74 | 0.74 | 0.74 | 0.74 | | |
| Peak Hour Link Volume - Base Count (Existing) | 486 | 295 | 290 | 484 | 359 | 236 | 199 | 319 | 1,334 | 1,334 |
| Ratio (Adj Base Model/Count) | 0.88 | 1.04 | 1.47 | 1.41 | 1.59 | 1.34 | 1.40 | 1.26 | | |
| Difference (Count-Adj Base Model) | 56 | -13 | -137 | -199 | -213 | -80 | -80 | -82 | | |
| Adj. Base to Future Model Growth - Ratio | 1.95 | 1.80 | 1.33 | 1.30 | 1.09 | 1.54 | 1.72 | 1.45 | | |
| Minimum Growth % (Existing to Buildout) | 0% | 0% | 0% | 0% | 0% | 0% | 0% | 0% | | |
| Minimum Link Volume - Future | 0 | 0 | 0 | 0 | 0 | 0 | 0 | 0 | | |
| Peak Hour Link Volume - Ratio Adjusted | 948 | 532 | 387 | 630 | 390 | 363 | 343 | 461 | 2,067 | 1,986 |
| Peak Hour Link Volume - Difference Adjusted | 894 | 542 | 433 | 690 | 408 | 405 | 401 | 498 | 2,136 | 2,136 |
| Peak Hour Link Volume - Combined Adjusted | 921 | 537 | 410 | 660 | 399 | 384 | 372 | 479 | 2,102 | 2,061 |
| Growth Method (Ratio/Difference/Combined/Model) | D | D | D | D | D | D | D | D | | |
| Link Volume Adjustment (increase only) | 10 | 0 | 0 | 0 | 0 | 0 | 0 | 0 | | |
| Post-Processed Link Volume | 900 | 540 | 430 | 690 | 410 | 410 | 400 | 500 | 2,140 | 2,140 |

| | NB | | | SB | | | EB | | | WB | | |
|---|---|---|---|---|---|---|---|---|---|---|---|---|
| | Left | Thru | Right | Left | Thru | Right | Left | Thru | Right | Left | Thru | Right |
| 2015 Existing Turning Movement | 35 | 392 | 59 | 29 | 214 | 47 | 76 | 231 | 52 | 29 | 154 | 16 |
| Project Only Turning Movement | 16 | 45 | 0 | 0 | 30 | 0 | 0 | 0 | 11 | 0 | 0 | 0 |
| Base Turning Movement Adjustment | 0 | 0 | 0 | 0 | 0 | 0 | 0 | 0 | 0 | 0 | 0 | 0 |
| Starting Turning Movement Volumes | 51 | 392 | 59 | 29 | 214 | 47 | 76 | 231 | 52 | 29 | 154 | 16 |
| **2035 With Project** | **99** | **620** | **181** | **38** | **354** | **38** | **48** | **281** | **81** | **104** | **273** | **23** |
| Difference (Delta With Project) | 64 | 228 | 122 | 9 | 140 | -9 | -28 | 50 | 29 | 75 | 119 | 7 |
| Difference (%) | 183% | 58% | 207% | 31% | 65% | -19% | -37% | 22% | 56% | 259% | 77% | 44% |
| **2035 Without Project** | **83** | **575** | **181** | **38** | **324** | **38** | **48** | **281** | **70** | **104** | **273** | **23** |
| Difference (Delta Without Project) | 48 | 183 | 122 | 9 | 110 | -9 | -28 | 50 | 18 | 75 | 119 | 7 |
| Difference (%) | 137% | 47% | 207% | 31% | 51% | -19% | -37% | 22% | 35% | 259% | 77% | 44% |

# VALLEY CORRIDOR SPECIFIC PLAN
## YEAR 2035

### 7. Alder Avenue / Marygold Avenue

| | | | |
|---|---|---|---|
| Base Count Year | 2015 | AM Peak Period Factor | 0.38 |
| Base Model Year | 2008 | PM Peak Period Factor | 0.28 |
| Future Model Year | 2035 | | |

**AM Peak**

| | NB | | SB | | EB | | WB | | Total | |
|---|---|---|---|---|---|---|---|---|---|---|
| | In | Out | In | Out | In | Out | In | Out | In | Out |
| Peak Period Link Volume - Base Model | 435 | 681 | 592 | 427 | 6 | 6 | 151 | 71 | 1,184 | 1,185 |
| Peak Period Link Volume - Future Model | 908 | 2,044 | 2,044 | 908 | 22 | 9 | 9 | 22 | 2,983 | 2,983 |
| Peak Hour Link Volume - Base Model | 165 | 259 | 225 | 162 | 2 | 2 | 57 | 27 | 450 | 450 |
| Peak Hour Link Volume - Future Model | 345 | 777 | 777 | 345 | 8 | 3 | 3 | 8 | 1,134 | 1,134 |
| Base to Future Model Growth - Ratio | 1.09 | 2.00 | 2.45 | 1.13 | 2.67 | 0.50 | -0.94 | -0.69 | | |
| Pro-rate Ratio - 2015 to 2035 | 0.74 | 0.74 | 0.74 | 0.74 | 0.74 | 0.74 | 0.74 | 0.74 | | |
| Peak Hour Link Volume - Base Count (Existing) | 221 | 281 | 418 | 253 | 101 | 236 | 130 | 100 | 870 | 870 |
| Ratio (Adj Base Model/Count) | 0.96 | 1.40 | 0.88 | 0.83 | 0.04 | 0.01 | 0.33 | 0.22 | | |
| Difference (Count-Adj Base Model) | 9 | -112 | 50 | 43 | 97 | 233 | 73 | 73 | | |
| Adj. Base to Future Model Growth - Ratio | 1.63 | 1.98 | 2.11 | 1.65 | 2.17 | 1.33 | 0.08 | 0.38 | | |
| Minimum Growth % (Existing to Buildout) | 0% | 0% | 0% | 0% | 0% | 0% | 0% | 0% | | |
| Minimum Link Volume - Future | 0 | 0 | 0 | 0 | 0 | 0 | 0 | 0 | | |
| Peak Hour Link Volume - Ratio Adjusted | 360 | 555 | 882 | 416 | 219 | 313 | 10 | 38 | 1,471 | 1,323 |
| Peak Hour Link Volume - Difference Adjusted | 354 | 665 | 827 | 388 | 106 | 237 | 76 | 81 | 1,362 | 1,371 |
| Peak Hour Link Volume - Combined Adjusted | 357 | 610 | 854 | 402 | 162 | 275 | 43 | 60 | 1,417 | 1,347 |
| Growth Method (Ratio/Difference/Combined/Model) | D | D | D | D | D | D | R | R | | |
| Link Volume Adjustment (increase only) | 0 | 0 | 0 | 0 | 0 | 0 | 30 | 0 | | |
| Post-Processed Link Volume | 350 | 660 | 830 | 390 | 110 | 240 | 40 | 40 | 1,330 | 1,330 |

| | NB | | | SB | | | EB | | | WB | | |
|---|---|---|---|---|---|---|---|---|---|---|---|---|
| | Left | Thru | Right | Left | Thru | Right | Left | Thru | Right | Left | Thru | Right |
| 2015 Existing Turning Movement | 11 | 195 | 15 | 40 | 255 | 123 | 41 | 45 | 15 | 11 | 102 | 17 |
| Project Only Turning Movement | 1 | 20 | 14 | 0 | 48 | 0 | 0 | 8 | 5 | 35 | 20 | 0 |
| Turning Movement Volume Adjustment | 0 | 0 | 0 | 0 | 0 | 0 | 0 | 0 | 0 | 0 | 0 | 0 |
| Starting Point - Turning Movement Volumes | 11 | 195 | 15 | 40 | 255 | 123 | 41 | 45 | 15 | 11 | 102 | 17 |
| **2035 With Project** | **18** | **326** | **20** | **17** | **621** | **192** | **60** | **17** | **33** | **40** | **30** | **5** |
| Difference (Delta With Project) | 7 | 131 | 5 | -23 | 366 | 69 | 19 | -28 | 18 | 29 | -72 | -12 |
| Difference (%) | 64% | 67% | 33% | -58% | 144% | 56% | 46% | -62% | 120% | 264% | -71% | -71% |
| **2035 Without Project** | **17** | **306** | **6** | **17** | **573** | **192** | **60** | **9** | **28** | **5** | **10** | **5** |
| Difference (Delta Without Project) | 6 | 111 | -9 | -23 | 318 | 69 | 19 | -36 | 13 | -6 | -92 | -12 |
| Difference (%) | 55% | 57% | -60% | -58% | 125% | 56% | 46% | -80% | 87% | -55% | -90% | -71% |

**PM Peak**

| | NB | | SB | | EB | | WB | | Total | |
|---|---|---|---|---|---|---|---|---|---|---|
| | In | Out | In | Out | In | Out | In | Out | In | Out |
| Peak Period Link Volume - Base Model | 1,165 | 815 | 789 | 1,024 | 8 | 9 | 136 | 251 | 2,098 | 2,099 |
| Peak Period Link Volume - Future Model | 2,991 | 1,982 | 1,982 | 2,991 | 17 | 27 | 27 | 17 | 5,017 | 5,017 |
| Peak Hour Link Volume - Base Model | 326 | 228 | 221 | 287 | 2 | 3 | 38 | 70 | 587 | 588 |
| Peak Hour Link Volume - Future Model | 837 | 555 | 555 | 837 | 5 | 8 | 8 | 5 | 1,405 | 1,405 |
| Base to Future Model Growth - Ratio | 1.57 | 1.43 | 1.51 | 1.92 | 1.13 | 2.00 | -0.80 | -0.93 | | |
| Pro-rate Ratio - 2015 to 2035 | 0.74 | 0.74 | 0.74 | 0.74 | 0.74 | 0.74 | 0.74 | 0.74 | | |
| Peak Hour Link Volume - Base Count (Existing) | 427 | 276 | 358 | 523 | 281 | 178 | 112 | 201 | 1,178 | 1,178 |
| Ratio (Adj Base Model/Count) | 1.07 | 1.13 | 0.86 | 0.82 | 0.01 | 0.02 | 0.27 | 0.27 | | |
| Difference (Count-Adj Base Model) | -32 | -37 | 50 | 93 | 278 | 174 | 74 | 131 | | |
| Adj. Base to Future Model Growth - Ratio | 1.83 | 1.77 | 1.80 | 1.95 | 1.65 | 1.98 | 0.25 | 0.09 | | |
| Minimum Growth % (Existing to Buildout) | 0% | 0% | 0% | 0% | 0% | 0% | 0% | 0% | | |
| Minimum Link Volume - Future | 0 | 0 | 0 | 0 | 0 | 0 | 0 | 0 | | |
| Peak Hour Link Volume - Ratio Adjusted | 780 | 489 | 646 | 1,020 | 462 | 352 | 28 | 18 | 1,916 | 1,879 |
| Peak Hour Link Volume - Difference Adjusted | 806 | 518 | 605 | 931 | 283 | 182 | 81 | 135 | 1,776 | 1,766 |
| Peak Hour Link Volume - Combined Adjusted | 793 | 504 | 626 | 975 | 373 | 267 | 55 | 77 | 1,846 | 1,823 |
| Growth Method (Ratio/Difference/Combined/Model) | D | D | D | D | D | D | R | R | | |
| Link Volume Adjustment (increase only) | 0 | 0 | 0 | 0 | 0 | 0 | 0 | 80 | | |
| Post-Processed Link Volume | 810 | 520 | 610 | 930 | 280 | 180 | 30 | 100 | 1,730 | 1,730 |

| | NB | | | SB | | | EB | | | WB | | |
|---|---|---|---|---|---|---|---|---|---|---|---|---|
| | Left | Thru | Right | Left | Thru | Right | Left | Thru | Right | Left | Thru | Right |
| 2015 Existing Turning Movement | 28 | 367 | 32 | 42 | 242 | 74 | 134 | 127 | 20 | 14 | 76 | 22 |
| Project Only Turning Movement | 5 | 61 | 28 | 0 | 41 | 0 | 0 | 13 | 2 | 17 | 10 | 0 |
| Base Turning Movement Adjustment | 0 | 0 | 0 | 0 | 0 | 0 | 0 | 0 | 0 | 0 | 0 | 0 |
| Starting Turning Movement Volumes | 33 | 367 | 32 | 42 | 242 | 74 | 134 | 127 | 20 | 14 | 76 | 22 |
| **2035 With Project** | **55** | **734** | **48** | **23** | **481** | **106** | **190** | **57** | **33** | **22** | **19** | **6** |
| Difference (Delta With Project) | 27 | 367 | 16 | -19 | 239 | 32 | 56 | -70 | 13 | 8 | -57 | -16 |
| Difference (%) | 96% | 100% | 50% | -45% | 99% | 43% | 42% | -55% | 65% | 57% | -75% | -73% |
| **2035 Without Project** | **50** | **673** | **20** | **23** | **440** | **106** | **190** | **44** | **31** | **5** | **9** | **6** |
| Difference (Delta Without Project) | 22 | 306 | -12 | -19 | 198 | 32 | 56 | -83 | 11 | -9 | -67 | -16 |
| Difference (%) | 79% | 83% | -38% | -45% | 82% | 43% | 42% | -65% | 55% | -64% | -88% | -73% |

# VALLEY CORRIDOR SPECIFIC PLAN
## YEAR 2035

### 8. Alder Avenue / Valley Boulevard

| | | | |
|---|---|---|---|
| Base Count Year | 2015 | AM Peak Period Factor | 0.38 |
| Base Model Year | 2008 | PM Peak Period Factor | 0.28 |
| Future Model Year | 2035 | | |

**AM Peak**

| | NB | | SB | | EB | | WB | | Total | |
|---|---|---|---|---|---|---|---|---|---|---|
| | In | Out | In | Out | In | Out | In | Out | In | Out |
| Peak Period Link Volume - Base Model | 0 | 0 | 681 | 435 | 794 | 1,363 | 1,154 | 831 | 2,629 | 2,629 |
| Peak Period Link Volume - Future Model | 1,209 | 2,620 | 2,044 | 908 | 962 | 1,328 | 1,429 | 789 | 5,644 | 5,645 |
| Peak Hour Link Volume - Base Model | 0 | 0 | 259 | 165 | 302 | 518 | 439 | 316 | 999 | 999 |
| Peak Hour Link Volume - Future Model | 459 | 996 | 777 | 345 | 366 | 505 | 543 | 300 | 2,145 | 2,145 |
| Base to Future Model Growth - Ratio | 0.00 | 0.00 | 2.00 | 1.09 | 0.21 | -0.03 | 0.24 | -0.05 | | |
| Pro-rate Ratio - 2015 to 2035 | 0.74 | 0.74 | 0.74 | 0.74 | 0.74 | 0.74 | 0.74 | 0.74 | | |
| Peak Hour Link Volume - Base Count (Existing) | 27 | 30 | 282 | 212 | 401 | 516 | 403 | 355 | 1,113 | 1,113 |
| Ratio (Adj Base Model/Count) | 0.00 | 0.00 | 1.39 | 1.00 | 0.79 | 1.00 | 1.16 | 0.88 | | |
| Difference (Count-Adj Base Model) | 27 | 30 | -111 | 0 | 83 | -2 | -63 | 39 | | |
| Adj. Base to Future Model Growth - Ratio | #DIV/0! | #DIV/0! | 1.98 | 1.63 | 1.15 | 0.98 | 1.17 | 0.96 | | |
| Minimum Growth % (Existing to Buildout) | 0% | 0% | 0% | 0% | 0% | 0% | 0% | 0% | | |
| Minimum Link Volume - Future | 0 | 0 | 0 | 0 | 0 | 0 | 0 | 0 | | |
| Peak Hour Link Volume - Ratio Adjusted | 0 | 0 | 557 | 345 | 461 | 506 | 470 | 342 | 1,488 | 1,193 |
| Peak Hour Link Volume - Difference Adjusted | 486 | 1,026 | 666 | 345 | 448 | 503 | 480 | 339 | 2,081 | 2,212 |
| Peak Hour Link Volume - Combined Adjusted | 243 | 513 | 611 | 345 | 454 | 504 | 475 | 340 | 1,784 | 1,703 |
| Growth Method (Ratio/Difference/Combined/Model) | D | D | D | D | D | R | D | R | | |
| Link Volume Adjustment (increase only) | 0 | 0 | 0 | 0 | 70 | 0 | 70 | 0 | | |
| Post-Processed Link Volume | 490 | 1,030 | 670 | 350 | 520 | 510 | 550 | 340 | 2,230 | 2,230 |

| | NB | | | SB | | | EB | | | WB | | |
|---|---|---|---|---|---|---|---|---|---|---|---|---|
| | Left | Thru | Right | Left | Thru | Right | Left | Thru | Right | Left | Thru | Right |
| 2015 Existing Turning Movement | 15 | 8 | 4 | 107 | 13 | 162 | 144 | 244 | 13 | 4 | 339 | 60 |
| Project Only Turning Movement | 14 | 4 | 0 | 50 | 15 | 46 | 16 | 194 | 51 | 0 | 98 | 23 |
| Turning Movement Volume Adjustment | 0 | 0 | 0 | 0 | 0 | 0 | 0 | 0 | 0 | 0 | 0 | 0 |
| Starting Point - Turning Movement Volumes | 15 | 8 | 4 | 107 | 13 | 162 | 144 | 244 | 13 | 4 | 339 | 60 |
| **2035 With Project** | **194** | **194** | **102** | **99** | **495** | **76** | **78** | **333** | **304** | **230** | **240** | **79** |
| Difference (Delta With Project) | 179 | 186 | 98 | -8 | 482 | -86 | -66 | 89 | 291 | 226 | -99 | 19 |
| Difference (%) | 1193% | 2325% | 2450% | -7% | 3708% | -53% | -46% | 36% | 2238% | 5650% | -29% | 32% |
| **2035 Without Project** | **180** | **190** | **102** | **49** | **480** | **30** | **62** | **139** | **253** | **230** | **142** | **56** |
| Difference (Delta Without Project) | 165 | 182 | 98 | -58 | 467 | -132 | -82 | -105 | 240 | 226 | -197 | -4 |
| Difference (%) | 1100% | 2275% | 2450% | -54% | 3592% | -81% | -57% | -43% | 1846% | 5650% | -58% | -7% |

**PM Peak**

| | NB | | SB | | EB | | WB | | Total | |
|---|---|---|---|---|---|---|---|---|---|---|
| | In | Out | In | Out | In | Out | In | Out | In | Out |
| Peak Period Link Volume - Base Model | 0 | 0 | 815 | 1,165 | 2,352 | 1,546 | 1,590 | 2,045 | 4,757 | 4,756 |
| Peak Period Link Volume - Future Model | 3,776 | 2,779 | 1,982 | 2,991 | 2,565 | 1,642 | 1,535 | 2,446 | 9,858 | 9,858 |
| Peak Hour Link Volume - Base Model | 0 | 0 | 228 | 326 | 659 | 433 | 445 | 573 | 1,332 | 1,332 |
| Peak Hour Link Volume - Future Model | 1,057 | 778 | 555 | 837 | 718 | 460 | 430 | 685 | 2,760 | 2,760 |
| Base to Future Model Growth - Ratio | 0.00 | 0.00 | 1.43 | 1.57 | 0.09 | 0.06 | -0.04 | 0.20 | | |
| Pro-rate Ratio - 2015 to 2035 | 0.74 | 0.74 | 0.74 | 0.74 | 0.74 | 0.74 | 0.74 | 0.74 | | |
| Peak Hour Link Volume - Base Count (Existing) | 76 | 59 | 261 | 441 | 991 | 574 | 565 | 819 | 1,893 | 1,893 |
| Ratio (Adj Base Model/Count) | 0.00 | 0.00 | 1.20 | 1.04 | 0.68 | 0.77 | 0.78 | 0.73 | | |
| Difference (Count-Adj Base Model) | 76 | 59 | -52 | -18 | 317 | 134 | 120 | 217 | | |
| Adj. Base to Future Model Growth - Ratio | #DIV/0! | #DIV/0! | 1.77 | 1.83 | 1.07 | 1.05 | 0.97 | 1.14 | | |
| Minimum Growth % (Existing to Buildout) | 0% | 0% | 0% | 0% | 0% | 0% | 0% | 0% | | |
| Minimum Link Volume - Future | 0 | 0 | 0 | 0 | 0 | 0 | 0 | 0 | | |
| Peak Hour Link Volume - Ratio Adjusted | 0 | 0 | 463 | 805 | 1,056 | 600 | 550 | 932 | 2,069 | 2,337 |
| Peak Hour Link Volume - Difference Adjusted | 1,133 | 837 | 503 | 820 | 1,035 | 594 | 550 | 902 | 3,221 | 3,153 |
| Peak Hour Link Volume - Combined Adjusted | 567 | 419 | 483 | 812 | 1,045 | 597 | 550 | 917 | 2,645 | 2,745 |
| Growth Method (Ratio/Difference/Combined/Model) | D | D | D | D | D | D | R | D | | |
| Link Volume Adjustment (increase only) | 0 | 0 | 0 | 0 | 0 | 70 | 0 | 0 | | |
| Post-Processed Link Volume | 1,130 | 840 | 500 | 820 | 1,040 | 660 | 550 | 900 | 3,220 | 3,220 |

| | NB | | | SB | | | EB | | | WB | | |
|---|---|---|---|---|---|---|---|---|---|---|---|---|
| | Left | Thru | Right | Left | Thru | Right | Left | Thru | Right | Left | Thru | Right |
| 2015 Existing Turning Movement | 35 | 26 | 15 | 123 | 15 | 123 | 272 | 681 | 38 | 6 | 416 | 143 |
| Project Only Turning Movement | 51 | 18 | 0 | 44 | 5 | 23 | 28 | 129 | 17 | 0 | 217 | 62 |
| Base Turning Movement Adjustment | 0 | 0 | 0 | 0 | 0 | 0 | 0 | 0 | 0 | 0 | 0 | 0 |
| Starting Turning Movement Volumes | 86 | 26 | 15 | 123 | 15 | 123 | 272 | 681 | 38 | 6 | 416 | 143 |
| **2035 With Project** | **429** | **432** | **269** | **160** | **295** | **45** | **174** | **470** | **396** | **147** | **405** | **215** |
| Difference (Delta With Project) | 394 | 406 | 254 | 37 | 280 | -78 | -98 | -211 | 358 | 141 | -11 | 72 |
| Difference (%) | 1126% | 1562% | 1693% | 30% | 1867% | -63% | -36% | -31% | 942% | 2350% | -3% | 50% |
| **2035 Without Project** | **378** | **414** | **269** | **116** | **290** | **22** | **146** | **341** | **379** | **147** | **188** | **153** |
| Difference (Delta Without Project) | 343 | 388 | 254 | -7 | 275 | -101 | -126 | -340 | 341 | 141 | -228 | 10 |
| Difference (%) | 980% | 1492% | 1693% | -6% | 1833% | -82% | -46% | -50% | 897% | 2350% | -55% | 7% |

# VALLEY CORRIDOR SPECIFIC PLAN
## YEAR 2035

### 9. Locust Avenue / Marygold Avenue

| | | | |
|---|---|---|---|
| Base Count Year | 2015 | AM Peak Period Factor | 0.38 |
| Base Model Year | 2008 | PM Peak Period Factor | 0.28 |
| Future Model Year | 2035 | | |

**AM Peak**

| | NB | | SB | | EB | | WB | | Total | |
|---|---|---|---|---|---|---|---|---|---|---|
| | In | Out | In | Out | In | Out | In | Out | In | Out |
| Peak Period Link Volume - Base Model | 298 | 636 | 565 | 169 | 71 | 90 | 8 | 48 | 942 | 943 |
| Peak Period Link Volume - Future Model | 479 | 1,227 | 1,072 | 304 | 15 | 85 | 168 | 117 | 1,734 | 1,733 |
| Peak Hour Link Volume - Base Model | 113 | 242 | 215 | 64 | 27 | 34 | 3 | 18 | 358 | 358 |
| Peak Hour Link Volume - Future Model | 182 | 466 | 407 | 116 | 6 | 32 | 64 | 44 | 659 | 659 |
| Base to Future Model Growth - Ratio | 0.61 | 0.93 | 0.90 | 0.80 | -0.79 | -0.06 | 20.00 | 1.44 | | |
| Pro-rate Ratio - 2015 to 2035 | 0.74 | 0.74 | 0.74 | 0.74 | 0.74 | 0.74 | 0.74 | 0.74 | | |
| Peak Hour Link Volume - Base Count (Existing) | 120 | 177 | 214 | 117 | 103 | 111 | 61 | 93 | 498 | 498 |
| Ratio (Adj Base Model/Count) | 1.09 | 1.69 | 1.24 | 0.66 | 0.21 | 0.30 | 0.31 | 0.27 | | |
| Difference (Count-Adj Base Model) | -11 | -123 | -51 | 39 | 76 | 77 | 42 | 68 | | |
| Adj. Base to Future Model Growth - Ratio | 1.39 | 1.55 | 1.54 | 1.49 | 0.27 | 0.96 | 3.40 | 1.78 | | |
| Minimum Growth % (Existing to Buildout) | 0% | 0% | 0% | 0% | 0% | 0% | 0% | 0% | | |
| Minimum Link Volume - Future | 0 | 0 | 0 | 0 | 0 | 0 | 0 | 0 | | |
| Peak Hour Link Volume - Ratio Adjusted | 167 | 275 | 329 | 174 | 27 | 106 | 207 | 165 | 731 | 721 |
| Peak Hour Link Volume - Difference Adjusted | 171 | 343 | 357 | 155 | 82 | 109 | 106 | 112 | 715 | 720 |
| Peak Hour Link Volume - Combined Adjusted | 169 | 309 | 343 | 165 | 55 | 108 | 157 | 139 | 723 | 720 |
| Growth Method (Ratio/Difference/Combined/Model) | D | D | D | D | R | R | D | D | | |
| Link Volume Adjustment (increase only) | 0 | 0 | 0 | 0 | 40 | 0 | 0 | 0 | | |
| Post-Processed Link Volume | 170 | 340 | 360 | 150 | 70 | 110 | 110 | 110 | 710 | 710 |

| | NB | | | SB | | | EB | | | WB | | |
|---|---|---|---|---|---|---|---|---|---|---|---|---|
| | Left | Thru | Right | Left | Thru | Right | Left | Thru | Right | Left | Thru | Right |
| 2015 Existing Turning Movement | 13 | 96 | 11 | 14 | 153 | 47 | 16 | 68 | 19 | 5 | 51 | 5 |
| Project Only Turning Movement | 19 | 5 | 11 | 0 | 11 | 0 | 0 | 4 | 58 | 28 | 8 | 0 |
| Turning Movement Volume Adjustment | 0 | 0 | 0 | 0 | 0 | 0 | 0 | 0 | 0 | 0 | 0 | 0 |
| Starting Point - Turning Movement Volumes | 13 | 96 | 11 | 14 | 153 | 47 | 16 | 68 | 19 | 5 | 51 | 5 |
| **2035 With Project** | **29** | **131** | **29** | **30** | **303** | **28** | **6** | **51** | **71** | **52** | **73** | **13** |
| Difference (Delta With Project) | 16 | 35 | 18 | 16 | 150 | -19 | -10 | -17 | 52 | 47 | 22 | 8 |
| Difference (%) | 123% | 36% | 164% | 114% | 98% | -40% | -63% | -25% | 274% | 940% | 43% | 160% |
| **2035 Without Project** | **10** | **126** | **18** | **30** | **292** | **28** | **6** | **47** | **13** | **24** | **65** | **13** |
| Difference (Delta Without Project) | -3 | 30 | 7 | 16 | 139 | -19 | -10 | -21 | -6 | 19 | 14 | 8 |
| Difference (%) | -23% | 31% | 64% | 114% | 91% | -40% | -63% | -31% | -32% | 380% | 27% | 160% |

**PM Peak**

| | NB | | SB | | EB | | WB | | Total | |
|---|---|---|---|---|---|---|---|---|---|---|
| | In | Out | In | Out | In | Out | In | Out | In | Out |
| Peak Period Link Volume - Base Model | 1,140 | 685 | 466 | 878 | 123 | 116 | 111 | 161 | 1,840 | 1,840 |
| Peak Period Link Volume - Future Model | 2,411 | 1,056 | 722 | 2,151 | 146 | 30 | 229 | 270 | 3,508 | 3,507 |
| Peak Hour Link Volume - Base Model | 319 | 192 | 130 | 246 | 34 | 32 | 31 | 45 | 515 | 515 |
| Peak Hour Link Volume - Future Model | 675 | 296 | 202 | 602 | 41 | 8 | 64 | 76 | 982 | 982 |
| Base to Future Model Growth - Ratio | 1.12 | 0.54 | 0.55 | 1.45 | 0.19 | -0.74 | 1.06 | 0.68 | | |
| Pro-rate Ratio - 2015 to 2035 | 0.74 | 0.74 | 0.74 | 0.74 | 0.74 | 0.74 | 0.74 | 0.74 | | |
| Peak Hour Link Volume - Base Count (Existing) | 308 | 150 | 174 | 324 | 168 | 97 | 58 | 137 | 708 | 708 |
| Ratio (Adj Base Model/Count) | 1.34 | 1.46 | 0.86 | 1.04 | 0.21 | 0.27 | 0.68 | 0.39 | | |
| Difference (Count-Adj Base Model) | -103 | -69 | 25 | -14 | 132 | 65 | 18 | 84 | | |
| Adj. Base to Future Model Growth - Ratio | 1.64 | 1.35 | 1.36 | 1.78 | 1.13 | 0.32 | 1.62 | 1.43 | | |
| Minimum Growth % (Existing to Buildout) | 0% | 0% | 0% | 0% | 0% | 0% | 0% | 0% | | |
| Minimum Link Volume - Future | 0 | 0 | 0 | 0 | 0 | 0 | 0 | 0 | | |
| Peak Hour Link Volume - Ratio Adjusted | 505 | 203 | 236 | 577 | 190 | 31 | 94 | 195 | 1,025 | 1,006 |
| Peak Hour Link Volume - Difference Adjusted | 572 | 227 | 227 | 588 | 173 | 73 | 82 | 160 | 1,054 | 1,047 |
| Peak Hour Link Volume - Combined Adjusted | 538 | 215 | 232 | 582 | 181 | 52 | 88 | 178 | 1,040 | 1,027 |
| Growth Method (Ratio/Difference/Combined/Model) | D | D | D | D | D | R | D | D | | |
| Link Volume Adjustment (increase only) | 0 | 0 | 0 | 0 | 0 | 40 | 0 | 0 | | |
| Post-Processed Link Volume | 570 | 230 | 230 | 590 | 170 | 70 | 80 | 160 | 1,050 | 1,050 |

| | NB | | | SB | | | EB | | | WB | | |
|---|---|---|---|---|---|---|---|---|---|---|---|---|
| | Left | Thru | Right | Left | Thru | Right | Left | Thru | Right | Left | Thru | Right |
| 2015 Existing Turning Movement | 19 | 260 | 29 | 12 | 128 | 34 | 55 | 96 | 17 | 5 | 44 | 9 |
| Project Only Turning Movement | 38 | 15 | 20 | 0 | 10 | 0 | 0 | 6 | 35 | 18 | 4 | 0 |
| Base Turning Movement Adjustment | 0 | 0 | 0 | 0 | 0 | 0 | 0 | 0 | 0 | 0 | 0 | 0 |
| Starting Turning Movement Volumes | 57 | 260 | 29 | 12 | 128 | 34 | 55 | 96 | 17 | 5 | 44 | 9 |
| **2035 With Project** | **62** | **498** | **49** | **19** | **198** | **13** | **61** | **93** | **52** | **33** | **33** | **31** |
| Difference (Delta With Project) | 43 | 238 | 20 | 7 | 70 | -21 | 6 | -3 | 35 | 28 | -11 | 22 |
| Difference (%) | 226% | 92% | 69% | 58% | 55% | -62% | 11% | -3% | 206% | 560% | -25% | 244% |
| **2035 Without Project** | **24** | **483** | **29** | **19** | **188** | **13** | **61** | **87** | **17** | **15** | **29** | **31** |
| Difference (Delta Without Project) | 5 | 223 | 0 | 7 | 60 | -21 | 6 | -9 | 0 | 10 | -15 | 22 |
| Difference (%) | 26% | 86% | 0% | 58% | 47% | -62% | 11% | -9% | 0% | 200% | -34% | 244% |

# VALLEY CORRIDOR SPECIFIC PLAN
## YEAR 2035

### 10. Locust Avenue / Valley Boulevard

| | | | |
|---|---|---|---|
| Base Count Year | 2015 | AM Peak Period Factor | 0.38 |
| Base Model Year | 2008 | PM Peak Period Factor | 0.28 |
| Future Model Year | 2035 | | |

**AM Peak**

| | NB | | SB | | EB | | WB | | Total | |
|---|---|---|---|---|---|---|---|---|---|---|
| | In | Out | In | Out | In | Out | In | Out | In | Out |
| Peak Period Link Volume - Base Model | 0 | 0 | 636 | 298 | 831 | 1,154 | 833 | 848 | 2,300 | 2,300 |
| Peak Period Link Volume - Future Model | 0 | 0 | 1,227 | 479 | 998 | 1,504 | 600 | 842 | 2,825 | 2,825 |
| Peak Hour Link Volume - Base Model | 0 | 0 | 242 | 113 | 316 | 439 | 317 | 322 | 874 | 874 |
| Peak Hour Link Volume - Future Model | 0 | 0 | 466 | 182 | 379 | 572 | 228 | 320 | 1,074 | 1,074 |
| Base to Future Model Growth - Ratio | 0.00 | 0.00 | 0.93 | 0.61 | 0.20 | 0.30 | -0.28 | -0.01 | | |
| Pro-rate Ratio - 2015 to 2035 | 0.74 | 0.74 | 0.74 | 0.74 | 0.74 | 0.74 | 0.74 | 0.74 | | |
| Peak Hour Link Volume - Base Count (Existing) | 22 | 56 | 170 | 104 | 318 | 464 | 491 | 377 | 1,001 | 1,001 |
| Ratio (Adj Base Model/Count) | 0.00 | 0.00 | 1.76 | 1.26 | 1.04 | 1.02 | 0.60 | 0.85 | | |
| Difference (Count-Adj Base Model) | 22 | 56 | -130 | -27 | -14 | -9 | 174 | 55 | | |
| Adj. Base to Future Model Growth - Ratio | 0.00 | 0.00 | 1.55 | 1.39 | 1.14 | 1.21 | 0.78 | 0.99 | | |
| Minimum Growth % (Existing to Buildout) | 0% | 0% | 0% | 0% | 0% | 0% | 0% | 0% | | |
| Minimum Link Volume - Future | 0 | 0 | 0 | 0 | 0 | 0 | 0 | 0 | | |
| Peak Hour Link Volume - Ratio Adjusted | 0 | 0 | 264 | 144 | 363 | 561 | 381 | 375 | 1,009 | 1,080 |
| Peak Hour Link Volume - Difference Adjusted | 22 | 56 | 336 | 155 | 365 | 563 | 402 | 375 | 1,126 | 1,148 |
| Peak Hour Link Volume - Combined Adjusted | 11 | 28 | 300 | 150 | 364 | 562 | 392 | 375 | 1,067 | 1,114 |
| Growth Method (Ratio/Difference/Combined/Model) | D | D | D | D | D | D | R | R | | |
| Link Volume Adjustment (increase only) | 0 | 0 | 0 | 0 | 0 | 0 | 40 | 0 | | |
| Post-Processed Link Volume | 20 | 60 | 340 | 150 | 370 | 560 | 420 | 380 | 1,150 | 1,150 |

| | NB | | | SB | | | EB | | | WB | | |
|---|---|---|---|---|---|---|---|---|---|---|---|---|
| | Left | Thru | Right | Left | Thru | Right | Left | Thru | Right | Left | Thru | Right |
| 2015 Existing Turning Movement | 1 | 5 | 16 | 87 | 5 | 78 | 41 | 274 | 3 | 48 | 385 | 58 |
| Project Only Turning Movement | 0 | 1 | 13 | 73 | 8 | 45 | 18 | 221 | 0 | 53 | 98 | 27 |
| Turning Movement Volume Adjustment | 0 | 0 | 0 | 0 | 0 | 0 | 0 | 0 | 0 | 0 | 0 | 0 |
| Starting Point - Turning Movement Volumes | 1 | 5 | 16 | 87 | 5 | 78 | 41 | 274 | 3 | 48 | 385 | 58 |
| **2035 With Project** | **2** | **8** | **24** | **101** | **14** | **225** | **95** | **268** | **7** | **92** | **333** | **48** |
| Difference (Delta With Project) | 1 | 3 | 8 | 14 | 9 | 147 | 54 | -6 | 4 | 44 | -52 | -10 |
| Difference (%) | 100% | 60% | 50% | 16% | 180% | 188% | 132% | -2% | 133% | 92% | -14% | -17% |
| **2035 Without Project** | **2** | **7** | **11** | **28** | **6** | **180** | **77** | **47** | **7** | **39** | **235** | **21** |
| Difference (Delta Without Project) | 1 | 2 | -5 | -59 | 1 | 102 | 36 | -227 | 4 | -9 | -150 | -37 |
| Difference (%) | 100% | 40% | -31% | -68% | 20% | 131% | 88% | -83% | 133% | -19% | -39% | -64% |

**PM Peak**

| | NB | | SB | | EB | | WB | | Total | |
|---|---|---|---|---|---|---|---|---|---|---|
| | In | Out | In | Out | In | Out | In | Out | In | Out |
| Peak Period Link Volume - Base Model | 0 | 0 | 685 | 1,140 | 2,045 | 1,590 | 1,460 | 1,460 | 4,190 | 4,190 |
| Peak Period Link Volume - Future Model | 0 | 0 | 1,056 | 2,411 | 2,733 | 1,919 | 1,860 | 1,319 | 5,649 | 5,649 |
| Peak Hour Link Volume - Base Model | 0 | 0 | 192 | 319 | 573 | 445 | 409 | 409 | 1,173 | 1,173 |
| Peak Hour Link Volume - Future Model | 0 | 0 | 296 | 675 | 765 | 537 | 521 | 369 | 1,582 | 1,582 |
| Base to Future Model Growth - Ratio | 0.00 | 0.00 | 0.54 | 1.12 | 0.34 | 0.21 | 0.27 | -0.10 | | |
| Pro-rate Ratio - 2015 to 2035 | 0.74 | 0.74 | 0.74 | 0.74 | 0.74 | 0.74 | 0.74 | 0.74 | | |
| Peak Hour Link Volume - Base Count (Existing) | 59 | 95 | 133 | 295 | 898 | 565 | 702 | 837 | 1,792 | 1,792 |
| Ratio (Adj Base Model/Count) | 0.00 | 0.00 | 1.64 | 1.39 | 0.69 | 0.83 | 0.62 | 0.48 | | |
| Difference (Count-Adj Base Model) | 59 | 95 | -86 | -116 | 276 | 96 | 264 | 428 | | |
| Adj. Base to Future Model Growth - Ratio | 0.00 | 0.00 | 1.35 | 1.64 | 1.23 | 1.15 | 1.19 | 0.93 | | |
| Minimum Growth % (Existing to Buildout) | 0% | 0% | 0% | 0% | 0% | 0% | 0% | 0% | | |
| Minimum Link Volume - Future | 0 | 0 | 0 | 0 | 0 | 0 | 0 | 0 | | |
| Peak Hour Link Volume - Ratio Adjusted | 0 | 0 | 180 | 484 | 1,104 | 647 | 835 | 776 | 2,119 | 1,907 |
| Peak Hour Link Volume - Difference Adjusted | 59 | 95 | 210 | 559 | 1,041 | 633 | 785 | 798 | 2,095 | 2,084 |
| Peak Hour Link Volume - Combined Adjusted | 30 | 48 | 195 | 521 | 1,072 | 640 | 810 | 787 | 2,107 | 1,996 |
| Growth Method (Ratio/Difference/Combined/Model) | D | D | D | D | D | D | D | R | | |
| Link Volume Adjustment (increase only) | 0 | 0 | 0 | 0 | 0 | 0 | 0 | 20 | | |
| Post-Processed Link Volume | 60 | 100 | 210 | 560 | 1,040 | 630 | 780 | 800 | 2,090 | 2,090 |

| | NB | | | SB | | | EB | | | WB | | |
|---|---|---|---|---|---|---|---|---|---|---|---|---|
| | Left | Thru | Right | Left | Thru | Right | Left | Thru | Right | Left | Thru | Right |
| 2015 Existing Turning Movement | 12 | 10 | 37 | 78 | 7 | 48 | 159 | 722 | 17 | 71 | 505 | 126 |
| Project Only Turning Movement | 0 | 5 | 53 | 46 | 3 | 28 | 31 | 165 | 0 | 18 | 265 | 55 |
| Base Turning Movement Adjustment | 0 | 0 | 0 | 0 | 0 | 0 | 0 | 0 | 0 | 0 | 0 | 0 |
| Starting Turning Movement Volumes | 12 | 10 | 37 | 78 | 7 | 48 | 159 | 722 | 17 | 71 | 505 | 126 |
| **2035 With Project** | **14** | **18** | **81** | **101** | **13** | **96** | **346** | **672** | **22** | **65** | **518** | **196** |
| Difference (Delta With Project) | 2 | 8 | 44 | 23 | 6 | 48 | 187 | -50 | 5 | -6 | 13 | 70 |
| Difference (%) | 17% | 80% | 119% | 29% | 86% | 100% | 118% | -7% | 29% | -8% | 3% | 56% |
| **2035 Without Project** | **14** | **13** | **28** | **55** | **10** | **68** | **315** | **507** | **22** | **47** | **253** | **141** |
| Difference (Delta Without Project) | 2 | 3 | -9 | -23 | 3 | 20 | 156 | -215 | 5 | -24 | -252 | 15 |
| Difference (%) | 17% | 30% | -24% | -29% | 43% | 42% | 98% | -30% | 29% | -34% | -50% | 12% |

# VALLEY CORRIDOR SPECIFIC PLAN
## YEAR 2035

### 11. Cedar Avenue / San Bernardino Avenue

| | | | |
|---|---|---|---|
| Base Count Year | 2015 | AM Peak Period Factor | 0.38 |
| Base Model Year | 2008 | PM Peak Period Factor | 0.28 |
| Future Model Year | 2035 | | |

**AM Peak**

| | NB | | SB | | EB | | WB | | Total | |
|---|---|---|---|---|---|---|---|---|---|---|
| | In | Out | In | Out | In | Out | In | Out | In | Out |
| Peak Period Link Volume - Base Model | 1,452 | 2,228 | 1,903 | 1,068 | 801 | 751 | 387 | 495 | 4,543 | 4,542 |
| Peak Period Link Volume - Future Model | 1,654 | 3,117 | 2,338 | 1,200 | 1,541 | 1,216 | 809 | 810 | 6,342 | 6,343 |
| Peak Hour Link Volume - Base Model | 552 | 847 | 723 | 406 | 304 | 285 | 147 | 188 | 1,726 | 1,726 |
| Peak Hour Link Volume - Future Model | 629 | 1,184 | 888 | 456 | 586 | 462 | 307 | 308 | 2,410 | 2,410 |
| Base to Future Model Growth - Ratio | 0.14 | 0.40 | 0.23 | 0.12 | 0.92 | 0.62 | 1.09 | 0.64 | | |
| Pro-rate Ratio - 2015 to 2035 | 0.74 | 0.74 | 0.74 | 0.74 | 0.74 | 0.74 | 0.74 | 0.74 | | |
| Peak Hour Link Volume - Base Count (Existing) | 757 | 956 | 1,008 | 736 | 157 | 206 | 218 | 242 | 2,140 | 2,140 |
| Ratio (Adj Base Model/Count) | 0.76 | 0.98 | 0.76 | 0.57 | 2.40 | 1.61 | 0.87 | 0.91 | | |
| Difference (Count-Adj Base Model) | 185 | 22 | 242 | 317 | -220 | -125 | 29 | 23 | | |
| Adj. Base to Future Model Growth - Ratio | 1.10 | 1.27 | 1.16 | 1.09 | 1.55 | 1.40 | 1.63 | 1.40 | | |
| Minimum Growth % (Existing to Buildout) | 0% | 0% | 0% | 0% | 0% | 0% | 0% | 0% | | |
| Minimum Link Volume - Future | 0 | 0 | 0 | 0 | 0 | 0 | 0 | 0 | | |
| Peak Hour Link Volume - Ratio Adjusted | 832 | 1,212 | 1,169 | 801 | 244 | 287 | 355 | 340 | 2,600 | 2,641 |
| Peak Hour Link Volume - Difference Adjusted | 814 | 1,206 | 1,130 | 773 | 365 | 337 | 337 | 331 | 2,646 | 2,647 |
| Peak Hour Link Volume - Combined Adjusted | 823 | 1,209 | 1,150 | 787 | 304 | 312 | 346 | 335 | 2,623 | 2,644 |
| Growth Method (Ratio/Difference/Combined/Model) | D | D | D | D | D | D | D | D | | |
| Link Volume Adjustment (increase only) | 0 | 0 | 0 | 0 | 0 | 0 | 0 | 0 | | |
| Post-Processed Link Volume | 810 | 1,210 | 1,130 | 770 | 370 | 340 | 340 | 330 | 2,650 | 2,650 |

| | NB | | | SB | | | EB | | | WB | | |
|---|---|---|---|---|---|---|---|---|---|---|---|---|
| | Left | Thru | Right | Left | Thru | Right | Left | Thru | Right | Left | Thru | Right |
| 2015 Existing Turning Movement | 55 | 664 | 38 | 94 | 875 | 39 | 18 | 110 | 29 | 52 | 112 | 54 |
| Project Only Turning Movement | 0 | 13 | 0 | 0 | 21 | 2 | 4 | 0 | -1 | 0 | 0 | 0 |
| Turning Movement Volume Adjustment | 0 | 0 | 0 | 0 | 0 | 0 | 0 | 0 | 0 | 0 | 0 | 0 |
| Starting Point - Turning Movement Volumes | 55 | 664 | 38 | 94 | 875 | 39 | 18 | 110 | 29 | 52 | 112 | 54 |
| **2035 With Project** | **96** | **677** | **37** | **64** | **1018** | **48** | **39** | **228** | **103** | **87** | **197** | **56** |
| Difference (Delta With Project) | 41 | 13 | -1 | -30 | 143 | 9 | 21 | 118 | 74 | 35 | 85 | 2 |
| Difference (%) | 75% | 2% | -3% | -32% | 16% | 23% | 117% | 107% | 255% | 67% | 76% | 4% |
| **2035 Without Project** | **96** | **664** | **37** | **64** | **997** | **46** | **35** | **228** | **104** | **87** | **197** | **56** |
| Difference (Delta Without Project) | 41 | 0 | -1 | -30 | 122 | 7 | 17 | 118 | 75 | 35 | 85 | 2 |
| Difference (%) | 75% | 0% | -3% | -32% | 14% | 18% | 94% | 107% | 259% | 67% | 76% | 4% |

**PM Peak**

| | NB | | SB | | EB | | WB | | Total | |
|---|---|---|---|---|---|---|---|---|---|---|
| | In | Out | In | Out | In | Out | In | Out | In | Out |
| Peak Period Link Volume - Base Model | 3,446 | 2,358 | 1,994 | 2,893 | 1,168 | 1,239 | 691 | 808 | 7,299 | 7,298 |
| Peak Period Link Volume - Future Model | 4,818 | 2,715 | 2,069 | 3,579 | 2,290 | 2,494 | 1,329 | 1,719 | 10,506 | 10,507 |
| Peak Hour Link Volume - Base Model | 965 | 660 | 558 | 810 | 327 | 347 | 193 | 226 | 2,044 | 2,043 |
| Peak Hour Link Volume - Future Model | 1,349 | 760 | 579 | 1,002 | 641 | 698 | 372 | 481 | 2,942 | 2,942 |
| Base to Future Model Growth - Ratio | 0.40 | 0.15 | 0.04 | 0.24 | 0.96 | 1.01 | 0.92 | 1.13 | | |
| Pro-rate Ratio - 2015 to 2035 | 0.74 | 0.74 | 0.74 | 0.74 | 0.74 | 0.74 | 0.74 | 0.74 | | |
| Peak Hour Link Volume - Base Count (Existing) | 997 | 824 | 818 | 990 | 237 | 178 | 183 | 243 | 2,235 | 2,235 |
| Ratio (Adj Base Model/Count) | 1.07 | 0.83 | 0.69 | 0.87 | 1.72 | 2.46 | 1.31 | 1.20 | | |
| Difference (Count-Adj Base Model) | -67 | 138 | 254 | 130 | -172 | -260 | -57 | -49 | | |
| Adj. Base to Future Model Growth - Ratio | 1.27 | 1.11 | 1.03 | 1.17 | 1.57 | 1.59 | 1.55 | 1.65 | | |
| Minimum Growth % (Existing to Buildout) | 0% | 0% | 0% | 0% | 0% | 0% | 0% | 0% | | |
| Minimum Link Volume - Future | 0 | 0 | 0 | 0 | 0 | 0 | 0 | 0 | | |
| Peak Hour Link Volume - Ratio Adjusted | 1,264 | 913 | 840 | 1,154 | 372 | 284 | 284 | 400 | 2,760 | 2,751 |
| Peak Hour Link Volume - Difference Adjusted | 1,282 | 898 | 833 | 1,132 | 470 | 438 | 315 | 432 | 2,900 | 2,901 |
| Peak Hour Link Volume - Combined Adjusted | 1,273 | 906 | 837 | 1,143 | 421 | 361 | 300 | 416 | 2,830 | 2,826 |
| Growth Method (Ratio/Difference/Combined/Model) | D | D | D | D | D | D | D | D | | |
| Link Volume Adjustment (increase only) | 0 | 0 | 0 | 0 | 0 | 0 | 0 | 0 | | |
| Post-Processed Link Volume | 1,280 | 900 | 830 | 1,130 | 470 | 440 | 320 | 430 | 2,900 | 2,900 |

| | NB | | | SB | | | EB | | | WB | | |
|---|---|---|---|---|---|---|---|---|---|---|---|---|
| | Left | Thru | Right | Left | Thru | Right | Left | Thru | Right | Left | Thru | Right |
| 2015 Existing Turning Movement | 37 | 907 | 53 | 39 | 744 | 35 | 36 | 151 | 50 | 30 | 106 | 47 |
| Project Only Turning Movement | 0 | 25 | 0 | 0 | 21 | 3 | 2 | 0 | 1 | 0 | 0 | 0 |
| Base Turning Movement Adjustment | 0 | 0 | 0 | 0 | 0 | 0 | 0 | 0 | 0 | 0 | 0 | 0 |
| Starting Turning Movement Volumes | 37 | 907 | 53 | 39 | 744 | 35 | 36 | 151 | 50 | 30 | 106 | 47 |
| **2035 With Project** | **135** | **1051** | **94** | **32** | **738** | **60** | **47** | **303** | **120** | **40** | **245** | **35** |
| Difference (Delta With Project) | 98 | 144 | 41 | -7 | -6 | 25 | 11 | 152 | 70 | 10 | 139 | -12 |
| Difference (%) | 265% | 16% | 77% | -18% | -1% | 71% | 31% | 101% | 140% | 33% | 131% | -26% |
| **2035 Without Project** | **135** | **1026** | **94** | **32** | **717** | **57** | **45** | **303** | **119** | **40** | **245** | **35** |
| Difference (Delta Without Project) | 98 | 119 | 41 | -7 | -27 | 22 | 9 | 152 | 69 | 10 | 139 | -12 |
| Difference (%) | 265% | 13% | 77% | -18% | -4% | 63% | 25% | 101% | 138% | 33% | 131% | -26% |

# VALLEY CORRIDOR SPECIFIC PLAN
## YEAR 2035

### 12. Cedar Avenue / Bloomington Avenue

| | | | |
|---|---|---|---|
| Base Count Year | 2015 | AM Peak Period Factor | 0.38 |
| Base Model Year | 2008 | PM Peak Period Factor | 0.28 |
| Future Model Year | 2035 | | |

**AM Peak**

| | NB | | SB | | EB | | WB | | Total | |
|---|---|---|---|---|---|---|---|---|---|---|
| | In | Out | In | Out | In | Out | In | Out | In | Out |
| Peak Period Link Volume - Base Model | 2,831 | 3,762 | 2,291 | 1,582 | 0 | 0 | 1,478 | 1,256 | 6,600 | 6,600 |
| Peak Period Link Volume - Future Model | 3,583 | 6,376 | 3,212 | 1,794 | 0 | 0 | 3,174 | 1,799 | 9,969 | 9,969 |
| Peak Hour Link Volume - Base Model | 1,076 | 1,430 | 871 | 601 | 0 | 0 | 562 | 477 | 2,508 | 2,508 |
| Peak Hour Link Volume - Future Model | 1,362 | 2,423 | 1,221 | 682 | 0 | 0 | 1,206 | 684 | 3,788 | 3,788 |
| Base to Future Model Growth - Ratio | 0.27 | 0.70 | 0.40 | 0.13 | 0.00 | 0.00 | 1.15 | 0.43 | | |
| Pro-rate Ratio - 2015 to 2035 | 0.74 | 0.74 | 0.74 | 0.74 | 0.74 | 0.74 | 0.74 | 0.74 | | |
| Peak Hour Link Volume - Base Count (Existing) | 1,006 | 1,321 | 1,074 | 780 | 0 | 0 | 371 | 350 | 2,451 | 2,451 |
| Ratio (Adj Base Model/Count) | 1.14 | 1.28 | 0.90 | 0.80 | 0.00 | 0.00 | 1.96 | 1.52 | | |
| Difference (Count-Adj Base Model) | -144 | -366 | 113 | 158 | 0 | 0 | -358 | -181 | | |
| Adj. Base to Future Model Growth - Ratio | 1.18 | 1.44 | 1.27 | 1.10 | 0.00 | 0.00 | 1.66 | 1.29 | | |
| Minimum Growth % (Existing to Buildout) | 0% | 0% | 0% | 0% | 0% | 0% | 0% | 0% | | |
| Minimum Link Volume - Future | 0 | 0 | 0 | 0 | 0 | 0 | 0 | 0 | | |
| Peak Hour Link Volume - Ratio Adjusted | 1,191 | 1,897 | 1,364 | 855 | 0 | 0 | 614 | 451 | 3,169 | 3,203 |
| Peak Hour Link Volume - Difference Adjusted | 1,218 | 2,057 | 1,333 | 840 | 0 | 0 | 848 | 503 | 3,399 | 3,399 |
| Peak Hour Link Volume - Combined Adjusted | 1,204 | 1,977 | 1,348 | 847 | 0 | 0 | 731 | 477 | 3,284 | 3,301 |
| Growth Method (Ratio/Difference/Combined/Model) | D | D | D | D | D | D | D | D | | |
| Link Volume Adjustment (increase only) | 0 | 0 | 0 | 0 | 0 | 0 | 0 | 0 | | |
| Post-Processed Link Volume | 1,220 | 2,060 | 1,330 | 840 | 0 | 0 | 850 | 500 | 3,400 | 3,400 |

| | NB | | | SB | | | EB | | | WB | | |
|---|---|---|---|---|---|---|---|---|---|---|---|---|
| | Left | Thru | Right | Left | Thru | Right | Left | Thru | Right | Left | Thru | Right |
| 2015 Existing Turning Movement | 0 | 724 | 282 | 68 | 1006 | 0 | 0 | 0 | 0 | 315 | 0 | 56 |
| Project Only Turning Movement | 0 | 13 | 40 | 0 | 20 | 0 | 0 | 0 | 0 | 49 | 0 | 0 |
| Turning Movement Volume Adjustment | 0 | 0 | 0 | 0 | 0 | 0 | 0 | 0 | 0 | 0 | 0 | 0 |
| Starting Point - Turning Movement Volumes | 0 | 724 | 282 | 68 | 1006 | 0 | 0 | 0 | 0 | 315 | 0 | 56 |
| **2035 With Project** | **0** | **778** | **442** | **61** | **1269** | **0** | **0** | **0** | **0** | **782** | **0** | **68** |
| Difference (Delta With Project) | 0 | 54 | 160 | -7 | 263 | 0 | 0 | 0 | 0 | 467 | 0 | 12 |
| Difference (%) | 0% | 7% | 57% | -10% | 26% | 0% | 0% | 0% | 0% | 148% | 0% | 21% |
| **2035 Without Project** | **0** | **765** | **402** | **61** | **1249** | **0** | **0** | **0** | **0** | **733** | **0** | **68** |
| Difference (Delta Without Project) | 0 | 41 | 120 | -7 | 243 | 0 | 0 | 0 | 0 | 418 | 0 | 12 |
| Difference (%) | 0% | 6% | 43% | -10% | 24% | 0% | 0% | 0% | 0% | 133% | 0% | 21% |

**PM Peak**

| | NB | | SB | | EB | | WB | | Total | |
|---|---|---|---|---|---|---|---|---|---|---|
| | In | Out | In | Out | In | Out | In | Out | In | Out |
| Peak Period Link Volume - Base Model | 6,448 | 4,273 | 2,439 | 3,529 | 0 | 0 | 1,837 | 2,923 | 10,724 | 10,725 |
| Peak Period Link Volume - Future Model | 10,050 | 6,117 | 2,964 | 4,933 | 0 | 0 | 3,162 | 5,125 | 16,176 | 16,175 |
| Peak Hour Link Volume - Base Model | 1,805 | 1,196 | 683 | 988 | 0 | 0 | 514 | 818 | 3,003 | 3,003 |
| Peak Hour Link Volume - Future Model | 2,814 | 1,713 | 830 | 1,381 | 0 | 0 | 885 | 1,435 | 4,529 | 4,529 |
| Base to Future Model Growth - Ratio | 0.56 | 0.43 | 0.22 | 0.40 | 0.00 | 0.00 | 0.72 | 0.75 | | |
| Pro-rate Ratio - 2015 to 2035 | 0.74 | 0.74 | 0.74 | 0.74 | 0.74 | 0.74 | 0.74 | 0.74 | | |
| Peak Hour Link Volume - Base Count (Existing) | 1,398 | 1,025 | 824 | 1,013 | 0 | 0 | 330 | 514 | 2,552 | 2,552 |
| Ratio (Adj Base Model/Count) | 1.48 | 1.30 | 0.87 | 1.08 | 0.00 | 0.00 | 1.85 | 1.90 | | |
| Difference (Count-Adj Base Model) | -669 | -305 | 103 | -77 | 0 | 0 | -281 | -464 | | |
| Adj. Base to Future Model Growth - Ratio | 1.36 | 1.29 | 1.15 | 1.27 | 0.00 | 0.00 | 1.45 | 1.47 | | |
| Minimum Growth % (Existing to Buildout) | 0% | 0% | 0% | 0% | 0% | 0% | 0% | 0% | | |
| Minimum Link Volume - Future | 0 | 0 | 0 | 0 | 0 | 0 | 0 | 0 | | |
| Peak Hour Link Volume - Ratio Adjusted | 1,903 | 1,320 | 948 | 1,284 | 0 | 0 | 479 | 754 | 3,330 | 3,357 |
| Peak Hour Link Volume - Difference Adjusted | 2,145 | 1,407 | 933 | 1,304 | 0 | 0 | 605 | 971 | 3,683 | 3,682 |
| Peak Hour Link Volume - Combined Adjusted | 2,024 | 1,363 | 941 | 1,294 | 0 | 0 | 542 | 862 | 3,506 | 3,520 |
| Growth Method (Ratio/Difference/Combined/Model) | D | D | D | D | D | D | D | D | | |
| Link Volume Adjustment (increase only) | 10 | 0 | 0 | 0 | 0 | 0 | 0 | 0 | | |
| Post-Processed Link Volume | 2,150 | 1,410 | 930 | 1,300 | 0 | 0 | 600 | 970 | 3,680 | 3,680 |

| | NB | | | SB | | | EB | | | WB | | |
|---|---|---|---|---|---|---|---|---|---|---|---|---|
| | Left | Thru | Right | Left | Thru | Right | Left | Thru | Right | Left | Thru | Right |
| 2015 Existing Turning Movement | 0 | 959 | 439 | 75 | 749 | 0 | 0 | 0 | 0 | 276 | 0 | 54 |
| Project Only Turning Movement | 0 | 25 | 58 | 0 | 22 | 0 | 0 | 0 | 0 | 43 | 0 | 0 |
| Base Turning Movement Adjustment | 0 | 0 | 0 | 0 | 0 | 0 | 0 | 0 | 0 | 0 | 0 | 0 |
| Starting Turning Movement Volumes | 0 | 959 | 439 | 75 | 749 | 0 | 0 | 0 | 0 | 276 | 0 | 54 |
| **2035 With Project** | **0** | **1249** | **901** | **72** | **858** | **0** | **0** | **0** | **0** | **543** | **0** | **57** |
| Difference (Delta With Project) | 0 | 290 | 462 | -3 | 109 | 0 | 0 | 0 | 0 | 267 | 0 | 3 |
| Difference (%) | 0% | 30% | 105% | -4% | 15% | 0% | 0% | 0% | 0% | 97% | 0% | 6% |
| **2035 Without Project** | **0** | **1224** | **843** | **72** | **836** | **0** | **0** | **0** | **0** | **500** | **0** | **57** |
| Difference (Delta Without Project) | 0 | 265 | 404 | -3 | 87 | 0 | 0 | 0 | 0 | 224 | 0 | 3 |
| Difference (%) | 0% | 28% | 92% | -4% | 12% | 0% | 0% | 0% | 0% | 81% | 0% | 6% |

# VALLEY CORRIDOR SPECIFIC PLAN
## YEAR 2035

### 13. Cedar Avenue / Valley Boulevard

| | | | |
|---|---|---|---|
| Base Count Year | 2015 | AM Peak Period Factor | 0.38 |
| Base Model Year | 2008 | PM Peak Period Factor | 0.28 |
| Future Model Year | 2035 | | |

**AM Peak**

| | NB | | SB | | EB | | WB | | Total | |
|---|---|---|---|---|---|---|---|---|---|---|
| | In | Out | In | Out | In | Out | In | Out | In | Out |
| Peak Period Link Volume - Base Model | 3,578 | 4,810 | 3,762 | 2,831 | 1,154 | 742 | 248 | 357 | 8,742 | 8,740 |
| Peak Period Link Volume - Future Model | 4,524 | 7,337 | 6,376 | 3,583 | 1,005 | 794 | 425 | 616 | 12,330 | 12,330 |
| Peak Hour Link Volume - Base Model | 1,360 | 1,828 | 1,430 | 1,076 | 439 | 282 | 94 | 136 | 3,322 | 3,321 |
| Peak Hour Link Volume - Future Model | 1,719 | 2,788 | 2,423 | 1,362 | 382 | 302 | 162 | 234 | 4,685 | 4,685 |
| Base to Future Model Growth - Ratio | 0.26 | 0.53 | 0.70 | 0.27 | -0.13 | 0.07 | 0.71 | 0.73 | | |
| Pro-rate Ratio - 2015 to 2035 | 0.74 | 0.74 | 0.74 | 0.74 | 0.74 | 0.74 | 0.74 | 0.74 | | |
| Peak Hour Link Volume - Base Count (Existing) | 1,510 | 2,045 | 1,294 | 1,064 | 687 | 539 | 580 | 423 | 4,071 | 4,071 |
| Ratio (Adj Base Model/Count) | 0.96 | 1.02 | 1.30 | 1.08 | 0.62 | 0.53 | 0.19 | 0.38 | | |
| Difference (Count-Adj Base Model) | 57 | -32 | -393 | -86 | 248 | 252 | 468 | 262 | | |
| Adj. Base to Future Model Growth - Ratio | 1.18 | 1.34 | 1.44 | 1.18 | 0.90 | 1.05 | 1.45 | 1.45 | | |
| Minimum Growth % (Existing to Buildout) | 0% | 0% | 0% | 0% | 0% | 0% | 0% | 0% | | |
| Minimum Link Volume - Future | 0 | 0 | 0 | 0 | 0 | 0 | 0 | 0 | | |
| Peak Hour Link Volume - Ratio Adjusted | 1,787 | 2,746 | 1,858 | 1,260 | 619 | 566 | 839 | 614 | 5,103 | 5,186 |
| Peak Hour Link Volume - Difference Adjusted | 1,776 | 2,756 | 2,030 | 1,276 | 630 | 554 | 630 | 496 | 5,066 | 5,082 |
| Peak Hour Link Volume - Combined Adjusted | 1,782 | 2,751 | 1,944 | 1,268 | 625 | 560 | 734 | 555 | 5,085 | 5,134 |
| Growth Method (Ratio/Difference/Combined/Model) | D | D | D | D | R | D | D | D | | |
| Link Volume Adjustment (increase only) | 0 | 0 | 0 | 0 | 30 | 0 | 0 | 0 | | |
| Post-Processed Link Volume | 1,780 | 2,760 | 2,030 | 1,280 | 650 | 550 | 630 | 500 | 5,090 | 5,090 |

| | NB | | | SB | | | EB | | | WB | | |
|---|---|---|---|---|---|---|---|---|---|---|---|---|
| | Left | Thru | Right | Left | Thru | Right | Left | Thru | Right | Left | Thru | Right |
| 2015 Existing Turning Movement | 313 | 986 | 211 | 58 | 1196 | 40 | 35 | 154 | 498 | 351 | 186 | 43 |
| Project Only Turning Movement | 228 | 0 | -3 | -1 | 0 | 70 | 55 | 20 | 151 | -7 | 18 | -2 |
| Turning Movement Volume Adjustment | 0 | 0 | 0 | 0 | 0 | 0 | 0 | 0 | 0 | 0 | 0 | 0 |
| Starting Point - Turning Movement Volumes | 313 | 986 | 211 | 58 | 1196 | 40 | 35 | 154 | 498 | 351 | 186 | 43 |
| **2035 With Project** | **319** | **1200** | **261** | **92** | **1885** | **123** | **88** | **147** | **470** | **403** | **178** | **49** |
| Difference (Delta With Project) | 6 | 214 | 50 | 34 | 689 | 83 | 53 | -7 | -28 | 52 | -8 | 6 |
| Difference (%) | 2% | 22% | 24% | 59% | 58% | 208% | 151% | -5% | -6% | 15% | -4% | 14% |
| **2035 Without Project** | **91** | **1200** | **264** | **93** | **1885** | **53** | **33** | **127** | **319** | **410** | **160** | **51** |
| Difference (Delta Without Project) | -222 | 214 | 53 | 35 | 689 | 13 | -2 | -27 | -179 | 59 | -26 | 8 |
| Difference (%) | -71% | 22% | 25% | 60% | 58% | 33% | -6% | -18% | -36% | 17% | -14% | 19% |

**PM Peak**

| | NB | | SB | | EB | | WB | | Total | |
|---|---|---|---|---|---|---|---|---|---|---|
| | In | Out | In | Out | In | Out | In | Out | In | Out |
| Peak Period Link Volume - Base Model | 8,051 | 5,604 | 4,273 | 6,448 | 1,666 | 1,884 | 601 | 655 | 14,591 | 14,591 |
| Peak Period Link Volume - Future Model | 11,939 | 7,350 | 6,117 | 10,050 | 1,582 | 2,105 | 834 | 968 | 20,472 | 20,473 |
| Peak Hour Link Volume - Base Model | 2,254 | 1,569 | 1,196 | 1,805 | 466 | 528 | 168 | 183 | 4,085 | 4,085 |
| Peak Hour Link Volume - Future Model | 3,343 | 2,058 | 1,713 | 2,814 | 443 | 589 | 234 | 271 | 5,732 | 5,732 |
| Base to Future Model Growth - Ratio | 0.48 | 0.31 | 0.43 | 0.56 | -0.05 | 0.12 | 0.39 | 0.48 | | |
| Pro-rate Ratio - 2015 to 2035 | 0.74 | 0.74 | 0.74 | 0.74 | 0.74 | 0.74 | 0.74 | 0.74 | | |
| Peak Hour Link Volume - Base Count (Existing) | 1,832 | 1,531 | 964 | 1,446 | 1,026 | 776 | 559 | 628 | 4,381 | 4,381 |
| Ratio (Adj Base Model/Count) | 1.38 | 1.11 | 1.38 | 1.43 | 0.45 | 0.70 | 0.33 | 0.33 | | |
| Difference (Count-Adj Base Model) | -705 | -165 | -366 | -621 | 560 | 232 | 374 | 422 | | |
| Adj. Base to Future Model Growth - Ratio | 1.32 | 1.21 | 1.29 | 1.36 | 0.96 | 1.08 | 1.26 | 1.31 | | |
| Minimum Growth % (Existing to Buildout) | 0% | 0% | 0% | 0% | 0% | 0% | 0% | 0% | | |
| Minimum Link Volume - Future | 0 | 0 | 0 | 0 | 0 | 0 | 0 | 0 | | |
| Peak Hour Link Volume - Ratio Adjusted | 2,414 | 1,858 | 1,241 | 1,968 | 987 | 842 | 705 | 826 | 5,347 | 5,493 |
| Peak Hour Link Volume - Difference Adjusted | 2,638 | 1,893 | 1,346 | 2,193 | 1,002 | 822 | 607 | 693 | 5,594 | 5,601 |
| Peak Hour Link Volume - Combined Adjusted | 2,526 | 1,875 | 1,294 | 2,081 | 995 | 832 | 656 | 759 | 5,471 | 5,547 |
| Growth Method (Ratio/Difference/Combined/Model) | D | D | D | D | R | D | D | D | | |
| Link Volume Adjustment (increase only) | 0 | 0 | 0 | 0 | 0 | 0 | 0 | 0 | | |
| Post-Processed Link Volume | 2,640 | 1,890 | 1,350 | 2,190 | 990 | 820 | 610 | 690 | 5,590 | 5,590 |

| | NB | | | SB | | | EB | | | WB | | |
|---|---|---|---|---|---|---|---|---|---|---|---|---|
| | Left | Thru | Right | Left | Thru | Right | Left | Thru | Right | Left | Thru | Right |
| 2015 Existing Turning Movement | 441 | 1189 | 202 | 101 | 790 | 73 | 188 | 325 | 513 | 228 | 262 | 69 |
| Project Only Turning Movement | 181 | 0 | 3 | 3 | 0 | 62 | 81 | 33 | 235 | 0 | 28 | 2 |
| Base Turning Movement Adjustment | 0 | 0 | 0 | 0 | 0 | 0 | 0 | 0 | 0 | 0 | 0 | 0 |
| Starting Turning Movement Volumes | 622 | 1189 | 202 | 101 | 790 | 73 | 188 | 325 | 513 | 228 | 262 | 69 |
| **2035 With Project** | **528** | **1862** | **250** | **143** | **1136** | **71** | **218** | **297** | **475** | **283** | **220** | **107** |
| Difference (Delta With Project) | 87 | 673 | 48 | 42 | 346 | -2 | 30 | -28 | -38 | 55 | -42 | 38 |
| Difference (%) | 20% | 57% | 24% | 42% | 44% | -3% | 16% | -9% | -7% | 24% | -16% | 55% |
| **2035 Without Project** | **347** | **1862** | **247** | **140** | **1136** | **9** | **137** | **264** | **240** | **283** | **192** | **105** |
| Difference (Delta Without Project) | -94 | 673 | 45 | 39 | 346 | -64 | -51 | -61 | -273 | 55 | -70 | 36 |
| Difference (%) | -21% | 57% | 22% | 39% | 44% | -88% | -27% | -19% | -53% | 24% | -27% | 52% |

# VALLEY CORRIDOR SPECIFIC PLAN
## YEAR 2035

### 14. Cedar Avenue / I-10 Westbound Ramps

| | | | |
|---|---|---|---|
| Base Count Year | 2015 | AM Peak Period Factor | 0.38 |
| Base Model Year | 2008 | PM Peak Period Factor | 0.28 |
| Future Model Year | 2035 | | |

**AM Peak**

| | NB | | SB | | EB | | WB | | Total | |
|---|---|---|---|---|---|---|---|---|---|---|
| | In | Out | In | Out | In | Out | In | Out | In | Out |
| Peak Period Link Volume - Base Model | 3,006 | 3,724 | 4,810 | 3,578 | 0 | 1,821 | 1,306 | 0 | 9,122 | 9,123 |
| Peak Period Link Volume - Future Model | 3,827 | 5,787 | 7,337 | 4,524 | 0 | 3,023 | 2,170 | 0 | 13,334 | 13,334 |
| Peak Hour Link Volume - Base Model | 1,142 | 1,415 | 1,828 | 1,360 | 0 | 692 | 496 | 0 | 3,466 | 3,467 |
| Peak Hour Link Volume - Future Model | 1,454 | 2,199 | 2,788 | 1,719 | 0 | 1,149 | 825 | 0 | 5,067 | 5,067 |
| Base to Future Model Growth - Ratio | 0.27 | 0.55 | 0.53 | 0.26 | 0.00 | 0.66 | 0.66 | 0.00 | | |
| Pro-rate Ratio - 2015 to 2035 | 0.74 | 0.74 | 0.74 | 0.74 | 0.74 | 0.74 | 0.74 | 0.74 | | |
| Peak Hour Link Volume - Base Count (Existing) | 1,389 | 1,386 | 2,036 | 1,490 | 0 | 1,183 | 634 | 0 | 4,059 | 4,059 |
| Ratio (Adj Base Model/Count) | 0.88 | 1.17 | 1.02 | 0.97 | 0.00 | 0.69 | 0.92 | 0.00 | | |
| Difference (Count-Adj Base Model) | 166 | -232 | -41 | 37 | 0 | 373 | 53 | 0 | | |
| Adj. Base to Future Model Growth - Ratio | 1.19 | 1.36 | 1.34 | 1.18 | 0.00 | 1.42 | 1.42 | 0.00 | | |
| Minimum Growth % (Existing to Buildout) | 0% | 0% | 0% | 0% | 0% | 0% | 0% | 0% | | |
| Minimum Link Volume - Future | 0 | 0 | 0 | 0 | 0 | 0 | 0 | 0 | | |
| Peak Hour Link Volume - Ratio Adjusted | 1,651 | 1,883 | 2,734 | 1,763 | 0 | 1,677 | 899 | 0 | 5,284 | 5,323 |
| Peak Hour Link Volume - Difference Adjusted | 1,620 | 1,967 | 2,747 | 1,756 | 0 | 1,521 | 877 | 0 | 5,245 | 5,244 |
| Peak Hour Link Volume - Combined Adjusted | 1,636 | 1,925 | 2,741 | 1,760 | 0 | 1,599 | 888 | 0 | 5,264 | 5,284 |
| Growth Method (Ratio/Difference/Combined/Model) | D | D | D | D | D | D | D | D | | |
| Link Volume Adjustment (increase only) | 0 | 0 | 0 | 0 | 0 | 0 | 0 | 0 | | |
| Post-Processed Link Volume | 1,620 | 1,970 | 2,750 | 1,760 | 0 | 1,520 | 880 | 0 | 5,250 | 5,250 |

| | NB | | | SB | | | EB | | | WB | | |
|---|---|---|---|---|---|---|---|---|---|---|---|---|
| | Left | Thru | Right | Left | Thru | Right | Left | Thru | Right | Left | Thru | Right |
| 2015 Existing Turning Movement | 293 | 1096 | 0 | 0 | 1147 | 889 | 0 | 0 | 0 | 239 | 1 | 394 |
| Project Only Turning Movement | 0 | 77 | 0 | 0 | 126 | 18 | 0 | 0 | 0 | 0 | 0 | 144 |
| Turning Movement Volume Adjustment | 0 | 0 | 0 | 0 | 0 | 0 | 0 | 0 | 0 | 0 | 0 | 0 |
| Starting Point - Turning Movement Volumes | 293 | 1096 | 0 | 0 | 1147 | 889 | 0 | 0 | 0 | 239 | 1 | 394 |
| **2035 With Project** | **368** | **1252** | **0** | **0** | **1600** | **1150** | **0** | **0** | **0** | **368** | **1** | **511** |
| Difference (Delta With Project) | 75 | 156 | 0 | 0 | 453 | 261 | 0 | 0 | 0 | 129 | 0 | 117 |
| Difference (%) | 26% | 14% | 0% | 0% | 39% | 29% | 0% | 0% | 0% | 54% | 0% | 30% |
| **2035 Without Project** | **368** | **1175** | **0** | **0** | **1474** | **1132** | **0** | **0** | **0** | **368** | **1** | **367** |
| Difference (Delta Without Project) | 75 | 79 | 0 | 0 | 327 | 243 | 0 | 0 | 0 | 129 | 0 | -27 |
| Difference (%) | 26% | 7% | 0% | 0% | 29% | 27% | 0% | 0% | 0% | 54% | 0% | -7% |

**PM Peak**

| | NB | | SB | | EB | | WB | | Total | |
|---|---|---|---|---|---|---|---|---|---|---|
| | In | Out | In | Out | In | Out | In | Out | In | Out |
| Peak Period Link Volume - Base Model | 6,616 | 4,723 | 5,604 | 8,051 | 0 | 1,966 | 2,520 | 0 | 14,740 | 14,740 |
| Peak Period Link Volume - Future Model | 9,947 | 6,324 | 7,350 | 11,939 | 0 | 3,654 | 4,621 | 0 | 21,918 | 21,917 |
| Peak Hour Link Volume - Base Model | 1,852 | 1,322 | 1,569 | 2,254 | 0 | 550 | 706 | 0 | 4,127 | 4,127 |
| Peak Hour Link Volume - Future Model | 2,785 | 1,771 | 2,058 | 3,343 | 0 | 1,023 | 1,294 | 0 | 6,137 | 6,137 |
| Base to Future Model Growth - Ratio | 0.50 | 0.34 | 0.31 | 0.48 | 0.00 | 0.86 | 0.83 | 0.00 | | |
| Pro-rate Ratio - 2015 to 2035 | 0.74 | 0.74 | 0.74 | 0.74 | 0.74 | 0.74 | 0.74 | 0.74 | | |
| Peak Hour Link Volume - Base Count (Existing) | 1,526 | 1,385 | 1,494 | 1,788 | 0 | 636 | 789 | 0 | 3,809 | 3,809 |
| Ratio (Adj Base Model/Count) | 1.37 | 1.04 | 1.14 | 1.42 | 0.00 | 1.06 | 1.09 | 0.00 | | |
| Difference (Count-Adj Base Model) | -568 | -54 | -202 | -749 | 0 | -37 | -69 | 0 | | |
| Adj. Base to Future Model Growth - Ratio | 1.33 | 1.23 | 1.21 | 1.32 | 0.00 | 1.52 | 1.51 | 0.00 | | |
| Minimum Growth % (Existing to Buildout) | 0% | 0% | 0% | 0% | 0% | 0% | 0% | 0% | | |
| Minimum Link Volume - Future | 0 | 0 | 0 | 0 | 0 | 0 | 0 | 0 | | |
| Peak Hour Link Volume - Ratio Adjusted | 2,030 | 1,705 | 1,813 | 2,356 | 0 | 967 | 1,190 | 0 | 5,032 | 5,028 |
| Peak Hour Link Volume - Difference Adjusted | 2,217 | 1,717 | 1,856 | 2,594 | 0 | 986 | 1,225 | 0 | 5,298 | 5,297 |
| Peak Hour Link Volume - Combined Adjusted | 2,123 | 1,711 | 1,834 | 2,475 | 0 | 976 | 1,207 | 0 | 5,165 | 5,163 |
| Growth Method (Ratio/Difference/Combined/Model) | D | D | D | D | D | D | D | D | | |
| Link Volume Adjustment (increase only) | 0 | 0 | 0 | 0 | 0 | 0 | 0 | 0 | | |
| Post-Processed Link Volume | 2,220 | 1,720 | 1,860 | 2,590 | 0 | 990 | 1,220 | 0 | 5,300 | 5,300 |

| | NB | | | SB | | | EB | | | WB | | |
|---|---|---|---|---|---|---|---|---|---|---|---|---|
| | Left | Thru | Right | Left | Thru | Right | Left | Thru | Right | Left | Thru | Right |
| 2015 Existing Turning Movement | 214 | 1312 | 0 | 0 | 1075 | 419 | 0 | 0 | 0 | 310 | 3 | 476 |
| Project Only Turning Movement | 0 | 80 | 0 | 0 | 222 | 13 | 0 | 0 | 0 | 0 | 0 | 97 |
| Base Turning Movement Adjustment | 0 | 0 | 0 | 0 | 0 | 0 | 0 | 0 | 0 | 0 | 0 | 0 |
| Starting Turning Movement Volumes | 214 | 1312 | 0 | 0 | 1075 | 419 | 0 | 0 | 0 | 310 | 3 | 476 |
| **2035 With Project** | **370** | **1850** | **0** | **0** | **1247** | **613** | **0** | **0** | **0** | **470** | **6** | **744** |
| Difference (Delta With Project) | 156 | 538 | 0 | 0 | 172 | 194 | 0 | 0 | 0 | 160 | 3 | 268 |
| Difference (%) | 73% | 41% | 0% | 0% | 16% | 46% | 0% | 0% | 0% | 52% | 100% | 56% |
| **2035 Without Project** | **370** | **1770** | **0** | **0** | **1025** | **600** | **0** | **0** | **0** | **470** | **6** | **647** |
| Difference (Delta Without Project) | 156 | 458 | 0 | 0 | -50 | 181 | 0 | 0 | 0 | 160 | 3 | 171 |
| Difference (%) | 73% | 35% | 0% | 0% | -5% | 43% | 0% | 0% | 0% | 52% | 100% | 36% |

# VALLEY CORRIDOR SPECIFIC PLAN
## YEAR 2035

### 15. Cedar Avenue / I-10 Eastbound Ramps

| | | | |
|---|---|---|---|
| Base Count Year | 2015 | AM Peak Period Factor | 0.38 |
| Base Model Year | 2008 | PM Peak Period Factor | 0.28 |
| Future Model Year | 2035 | | |

**AM Peak**

| | NB | | SB | | EB | | WB | | Total | |
|---|---|---|---|---|---|---|---|---|---|---|
| | In | Out | In | Out | In | Out | In | Out | In | Out |
| Peak Period Link Volume - Base Model | 2,273 | 3,106 | 3,724 | 3,006 | 1,650 | 0 | 0 | 1,535 | 7,647 | 7,647 |
| Peak Period Link Volume - Future Model | 2,790 | 5,197 | 5,787 | 3,827 | 2,689 | 0 | 0 | 2,242 | 11,266 | 11,266 |
| Peak Hour Link Volume - Base Model | 864 | 1,180 | 1,415 | 1,142 | 627 | 0 | 0 | 583 | 2,906 | 2,906 |
| Peak Hour Link Volume - Future Model | 1,060 | 1,975 | 2,199 | 1,454 | 1,022 | 0 | 0 | 852 | 4,281 | 4,281 |
| Base to Future Model Growth - Ratio | 0.23 | 0.67 | 0.55 | 0.27 | 0.63 | 0.00 | 0.00 | 0.46 | | |
| Pro-rate Ratio - 2015 to 2035 | 0.74 | 0.74 | 0.74 | 0.74 | 0.74 | 0.74 | 0.74 | 0.74 | | |
| Peak Hour Link Volume - Base Count (Existing) | 1,241 | 1,145 | 1,391 | 1,396 | 691 | 0 | 0 | 782 | 3,323 | 3,323 |
| Ratio (Adj Base Model/Count) | 0.74 | 1.21 | 1.16 | 0.88 | 1.06 | 0.00 | 0.00 | 0.84 | | |
| Difference (Count-Adj Base Model) | 326 | -241 | -227 | 173 | -38 | 0 | 0 | 129 | | |
| Adj. Base to Future Model Growth - Ratio | 1.16 | 1.42 | 1.36 | 1.19 | 1.40 | 0.00 | 0.00 | 1.30 | | |
| Minimum Growth % (Existing to Buildout) | 0% | 0% | 0% | 0% | 0% | 0% | 0% | 0% | | |
| Minimum Link Volume - Future | 0 | 0 | 0 | 0 | 0 | 0 | 0 | 0 | | |
| Peak Hour Link Volume - Ratio Adjusted | 1,439 | 1,631 | 1,890 | 1,660 | 968 | 0 | 0 | 1,020 | 4,297 | 4,311 |
| Peak Hour Link Volume - Difference Adjusted | 1,387 | 1,734 | 1,972 | 1,627 | 983 | 0 | 0 | 981 | 4,342 | 4,342 |
| Peak Hour Link Volume - Combined Adjusted | 1,413 | 1,682 | 1,931 | 1,643 | 976 | 0 | 0 | 1,001 | 4,319 | 4,326 |
| Growth Method (Ratio/Difference/Combined/Model) | D | D | D | D | D | D | D | D | | |
| Link Volume Adjustment (increase only) | 0 | 0 | 0 | 0 | 0 | 0 | 0 | 0 | | |
| Post-Processed Link Volume | 1,390 | 1,730 | 1,970 | 1,630 | 980 | 0 | 0 | 980 | 4,340 | 4,340 |

| | NB | | | SB | | | EB | | | WB | | |
|---|---|---|---|---|---|---|---|---|---|---|---|---|
| | Left | Thru | Right | Left | Thru | Right | Left | Thru | Right | Left | Thru | Right |
| 2015 Existing Turning Movement | 0 | 928 | 313 | 467 | 924 | 0 | 468 | 2 | 221 | 0 | 0 | 0 |
| Project Only Turning Movement | 0 | 51 | 0 | 93 | 33 | 0 | 26 | 0 | 0 | 0 | 0 | 0 |
| Turning Movement Volume Adjustment | 0 | 0 | 0 | 0 | 0 | 0 | 0 | 0 | 0 | 0 | 0 | 0 |
| Starting Point - Turning Movement Volumes | 0 | 928 | 313 | 467 | 924 | 0 | 468 | 2 | 221 | 0 | 0 | 0 |
| **2035 With Project** | **0** | **1018** | **372** | **604** | **1366** | **0** | **616** | **3** | **361** | **0** | **0** | **0** |
| Difference (Delta With Project) | 0 | 90 | 59 | 137 | 442 | 0 | 148 | 1 | 140 | 0 | 0 | 0 |
| Difference (%) | 0% | 10% | 19% | 29% | 48% | 0% | 32% | 50% | 63% | 0% | 0% | 0% |
| **2035 Without Project** | **0** | **967** | **372** | **511** | **1333** | **0** | **590** | **3** | **361** | **0** | **0** | **0** |
| Difference (Delta Without Project) | 0 | 39 | 59 | 44 | 409 | 0 | 122 | 1 | 140 | 0 | 0 | 0 |
| Difference (%) | 0% | 4% | 19% | 9% | 44% | 0% | 26% | 50% | 63% | 0% | 0% | 0% |

**PM Peak**

| | NB | | SB | | EB | | WB | | Total | |
|---|---|---|---|---|---|---|---|---|---|---|
| | In | Out | In | Out | In | Out | In | Out | In | Out |
| Peak Period Link Volume - Base Model | 4,908 | 4,289 | 4,723 | 6,616 | 2,991 | 0 | 0 | 1,717 | 12,622 | 12,622 |
| Peak Period Link Volume - Future Model | 7,314 | 5,756 | 6,324 | 9,947 | 5,033 | 0 | 0 | 2,968 | 18,671 | 18,671 |
| Peak Hour Link Volume - Base Model | 1,374 | 1,201 | 1,322 | 1,852 | 837 | 0 | 0 | 481 | 3,534 | 3,534 |
| Peak Hour Link Volume - Future Model | 2,048 | 1,612 | 1,771 | 2,785 | 1,409 | 0 | 0 | 831 | 5,228 | 5,228 |
| Base to Future Model Growth - Ratio | 0.49 | 0.34 | 0.34 | 0.50 | 0.68 | 0.00 | 0.00 | 0.73 | | |
| Pro-rate Ratio - 2015 to 2035 | 0.74 | 0.74 | 0.74 | 0.74 | 0.74 | 0.74 | 0.74 | 0.74 | | |
| Peak Hour Link Volume - Base Count (Existing) | 1,131 | 1,217 | 1,408 | 1,531 | 873 | 0 | 0 | 664 | 3,412 | 3,412 |
| Ratio (Adj Base Model/Count) | 1.37 | 1.07 | 1.02 | 1.37 | 1.13 | 0.00 | 0.00 | 0.86 | | |
| Difference (Count-Adj Base Model) | -418 | -90 | -31 | -563 | -113 | 0 | 0 | 92 | | |
| Adj. Base to Future Model Growth - Ratio | 1.32 | 1.23 | 1.23 | 1.33 | 1.43 | 0.00 | 0.00 | 1.45 | | |
| Minimum Growth % (Existing to Buildout) | 0% | 0% | 0% | 0% | 0% | 0% | 0% | 0% | | |
| Minimum Link Volume - Future | 0 | 0 | 0 | 0 | 0 | 0 | 0 | 0 | | |
| Peak Hour Link Volume - Ratio Adjusted | 1,495 | 1,500 | 1,733 | 2,036 | 1,248 | 0 | 0 | 965 | 4,476 | 4,502 |
| Peak Hour Link Volume - Difference Adjusted | 1,630 | 1,521 | 1,740 | 2,222 | 1,296 | 0 | 0 | 923 | 4,667 | 4,667 |
| Peak Hour Link Volume - Combined Adjusted | 1,563 | 1,511 | 1,737 | 2,129 | 1,272 | 0 | 0 | 944 | 4,572 | 4,584 |
| Growth Method (Ratio/Difference/Combined/Model) | D | D | D | D | D | D | D | D | | |
| Link Volume Adjustment (increase only) | 0 | 0 | 0 | 0 | 0 | 0 | 0 | 10 | | |
| Post-Processed Link Volume | 1,630 | 1,520 | 1,740 | 2,220 | 1,300 | 0 | 0 | 930 | 4,670 | 4,670 |

| | NB | | | SB | | | EB | | | WB | | |
|---|---|---|---|---|---|---|---|---|---|---|---|---|
| | Left | Thru | Right | Left | Thru | Right | Left | Thru | Right | Left | Thru | Right |
| 2015 Existing Turning Movement | 0 | 843 | 288 | 374 | 1034 | 0 | 688 | 2 | 183 | 0 | 0 | 0 |
| Project Only Turning Movement | 0 | 62 | 0 | 157 | 65 | 0 | 18 | 0 | 0 | 0 | 0 | 0 |
| Base Turning Movement Adjustment | 0 | 0 | 0 | 0 | 0 | 0 | 0 | 0 | 0 | 0 | 0 | 0 |
| Starting Turning Movement Volumes | 0 | 843 | 288 | 374 | 1034 | 0 | 688 | 2 | 183 | 0 | 0 | 0 |
| **2035 With Project** | **0** | **1215** | **415** | **462** | **1278** | **0** | **1025** | **3** | **273** | **0** | **0** | **0** |
| Difference (Delta With Project) | 0 | 372 | 127 | 88 | 244 | 0 | 337 | 1 | 90 | 0 | 0 | 0 |
| Difference (%) | 0% | 44% | 44% | 24% | 24% | 0% | 49% | 50% | 49% | 0% | 0% | 0% |
| **2035 Without Project** | **0** | **1153** | **415** | **305** | **1213** | **0** | **1007** | **3** | **273** | **0** | **0** | **0** |
| Difference (Delta Without Project) | 0 | 310 | 127 | -69 | 179 | 0 | 319 | 1 | 90 | 0 | 0 | 0 |
| Difference (%) | 0% | 37% | 44% | -18% | 17% | 0% | 46% | 50% | 49% | 0% | 0% | 0% |

# VALLEY CORRIDOR SPECIFIC PLAN
## YEAR 2035

### 16. Cedar Avenue / Slover Avenue

| | | | |
|---|---|---|---|
| Base Count Year | 2015 | AM Peak Period Factor | 0.38 |
| Base Model Year | 2008 | PM Peak Period Factor | 0.28 |
| Future Model Year | 2035 | | |

**AM Peak**

| | NB | | SB | | EB | | WB | | Total | |
|---|---|---|---|---|---|---|---|---|---|---|
| | In | Out | In | Out | In | Out | In | Out | In | Out |
| Peak Period Link Volume - Base Model | 1,564 | 1,801 | 3,065 | 2,253 | 757 | 1,078 | 313 | 568 | 5,699 | 5,700 |
| Peak Period Link Volume - Future Model | 1,541 | 2,747 | 5,099 | 2,768 | 1,768 | 2,296 | 369 | 966 | 8,777 | 8,777 |
| Peak Hour Link Volume - Base Model | 594 | 684 | 1,165 | 856 | 288 | 410 | 119 | 216 | 2,166 | 2,166 |
| Peak Hour Link Volume - Future Model | 586 | 1,044 | 1,938 | 1,052 | 672 | 872 | 140 | 367 | 3,335 | 3,335 |
| Base to Future Model Growth - Ratio | -0.02 | 0.53 | 0.66 | 0.23 | 1.34 | 1.13 | 0.18 | 0.70 | | |
| Pro-rate Ratio - 2015 to 2035 | 0.74 | 0.74 | 0.74 | 0.74 | 0.74 | 0.74 | 0.74 | 0.74 | | |
| Peak Hour Link Volume - Base Count (Existing) | 890 | 926 | 797 | 841 | 199 | 129 | 250 | 240 | 2,136 | 2,136 |
| Ratio (Adj Base Model/Count) | 0.67 | 0.84 | 1.71 | 1.08 | 1.95 | 4.11 | 0.50 | 1.06 | | |
| Difference (Count-Adj Base Model) | 296 | 148 | -568 | -66 | -188 | -401 | 126 | -15 | | |
| Adj. Base to Future Model Growth - Ratio | 0.99 | 1.34 | 1.42 | 1.16 | 1.73 | 1.65 | 1.13 | 1.44 | | |
| Minimum Growth % (Existing to Buildout) | 0% | 0% | 0% | 0% | 0% | 0% | 0% | 0% | | |
| Minimum Link Volume - Future | 0 | 0 | 0 | 0 | 0 | 0 | 0 | 0 | | |
| Peak Hour Link Volume - Ratio Adjusted | 880 | 1,243 | 1,131 | 975 | 345 | 212 | 282 | 345 | 2,638 | 2,776 |
| Peak Hour Link Volume - Difference Adjusted | 881 | 1,192 | 1,369 | 986 | 484 | 472 | 266 | 352 | 3,000 | 3,002 |
| Peak Hour Link Volume - Combined Adjusted | 881 | 1,218 | 1,250 | 981 | 414 | 342 | 274 | 349 | 2,819 | 2,889 |
| Growth Method (Ratio/Difference/Combined/Model) | R | D | D | D | D | D | D | D | | |
| Link Volume Adjustment (increase only) | 0 | 0 | 0 | 0 | 0 | 0 | 0 | 0 | | |
| Post-Processed Link Volume | 880 | 1,190 | 1,370 | 990 | 480 | 470 | 270 | 350 | 3,000 | 3,000 |

| | NB | | | SB | | | EB | | | WB | | |
|---|---|---|---|---|---|---|---|---|---|---|---|---|
| | Left | Thru | Right | Left | Thru | Right | Left | Thru | Right | Left | Thru | Right |
| 2015 Existing Turning Movement | 45 | 790 | 55 | 77 | 704 | 16 | 19 | 108 | 72 | 150 | 68 | 32 |
| Project Only Turning Movement | 0 | 16 | 0 | 4 | 15 | 14 | 24 | 0 | 0 | 0 | 0 | 11 |
| Turning Movement Volume Adjustment | 0 | 0 | 0 | 0 | 0 | 0 | 0 | 0 | 0 | 0 | 0 | 0 |
| Starting Point - Turning Movement Volumes | 45 | 790 | 55 | 77 | 704 | 16 | 19 | 108 | 72 | 150 | 68 | 32 |
| **2035 With Project** | **81** | **786** | **13** | **131** | **1030** | **210** | **155** | **207** | **119** | **44** | **179** | **46** |
| Difference (Delta With Project) | 36 | -4 | -42 | 54 | 326 | 194 | 136 | 99 | 47 | -106 | 111 | 14 |
| Difference (%) | 80% | -1% | -76% | 70% | 46% | 1213% | 716% | 92% | 65% | -71% | 163% | 44% |
| **2035 Without Project** | **81** | **770** | **13** | **127** | **1015** | **196** | **131** | **207** | **119** | **44** | **179** | **35** |
| Difference (Delta Without Project) | 36 | -20 | -42 | 50 | 311 | 180 | 112 | 99 | 47 | -106 | 111 | 3 |
| Difference (%) | 80% | -3% | -76% | 65% | 44% | 1125% | 589% | 92% | 65% | -71% | 163% | 9% |

**PM Peak**

| | NB | | SB | | EB | | WB | | Total | |
|---|---|---|---|---|---|---|---|---|---|---|
| | In | Out | In | Out | In | Out | In | Out | In | Out |
| Peak Period Link Volume - Base Model | 2,949 | 2,580 | 4,251 | 4,833 | 1,715 | 1,360 | 643 | 784 | 9,558 | 9,557 |
| Peak Period Link Volume - Future Model | 3,698 | 2,883 | 5,632 | 7,137 | 3,476 | 3,047 | 1,206 | 944 | 14,012 | 14,011 |
| Peak Hour Link Volume - Base Model | 826 | 722 | 1,190 | 1,353 | 480 | 381 | 180 | 220 | 2,676 | 2,676 |
| Peak Hour Link Volume - Future Model | 1,035 | 807 | 1,577 | 1,998 | 973 | 853 | 338 | 264 | 3,923 | 3,923 |
| Base to Future Model Growth - Ratio | 0.25 | 0.12 | 0.33 | 0.48 | 1.03 | 1.24 | 0.88 | 0.20 | | |
| Pro-rate Ratio - 2015 to 2035 | 0.74 | 0.74 | 0.74 | 0.74 | 0.74 | 0.74 | 0.74 | 0.74 | | |
| Peak Hour Link Volume - Base Count (Existing) | 761 | 819 | 854 | 926 | 409 | 225 | 175 | 229 | 2,199 | 2,199 |
| Ratio (Adj Base Model/Count) | 1.16 | 0.91 | 1.51 | 1.64 | 1.49 | 2.24 | 1.26 | 1.01 | | |
| Difference (Count-Adj Base Model) | -119 | 75 | -437 | -595 | -199 | -278 | -46 | -2 | | |
| Adj. Base to Future Model Growth - Ratio | 1.18 | 1.08 | 1.22 | 1.31 | 1.60 | 1.70 | 1.53 | 1.14 | | |
| Minimum Growth % (Existing to Buildout) | 0% | 0% | 0% | 0% | 0% | 0% | 0% | 0% | | |
| Minimum Link Volume - Future | 0 | 0 | 0 | 0 | 0 | 0 | 0 | 0 | | |
| Peak Hour Link Volume - Ratio Adjusted | 895 | 888 | 1,044 | 1,217 | 655 | 381 | 267 | 262 | 2,861 | 2,749 |
| Peak Hour Link Volume - Difference Adjusted | 916 | 882 | 1,140 | 1,404 | 774 | 575 | 292 | 262 | 3,123 | 3,123 |
| Peak Hour Link Volume - Combined Adjusted | 906 | 885 | 1,092 | 1,310 | 714 | 478 | 280 | 262 | 2,992 | 2,936 |
| Growth Method (Ratio/Difference/Combined/Model) | D | D | D | D | D | D | D | D | | |
| Link Volume Adjustment (increase only) | 0 | 0 | 0 | 0 | 0 | 10 | 0 | 0 | | |
| Post-Processed Link Volume | 920 | 880 | 1,140 | 1,400 | 770 | 580 | 290 | 260 | 3,120 | 3,120 |

| | NB | | | SB | | | EB | | | WB | | |
|---|---|---|---|---|---|---|---|---|---|---|---|---|
| | Left | Thru | Right | Left | Thru | Right | Left | Thru | Right | Left | Thru | Right |
| 2015 Existing Turning Movement | 67 | 676 | 18 | 53 | 727 | 74 | 185 | 158 | 66 | 26 | 84 | 65 |
| Project Only Turning Movement | 0 | 15 | 0 | 11 | 19 | 35 | 36 | 0 | 0 | 0 | 0 | 11 |
| Base Turning Movement Adjustment | 0 | 0 | 0 | 0 | 0 | 0 | 0 | 0 | 0 | 0 | 0 | 0 |
| Starting Turning Movement Volumes | 67 | 676 | 18 | 53 | 727 | 74 | 185 | 158 | 66 | 26 | 84 | 65 |
| **2035 With Project** | **115** | **796** | **9** | **62** | **792** | **287** | **507** | **189** | **74** | **16** | **179** | **95** |
| Difference (Delta With Project) | 48 | 120 | -9 | 9 | 65 | 213 | 322 | 31 | 8 | -10 | 95 | 30 |
| Difference (%) | 72% | 18% | -50% | 17% | 9% | 288% | 174% | 20% | 12% | -38% | 113% | 46% |
| **2035 Without Project** | **115** | **781** | **9** | **51** | **773** | **252** | **471** | **189** | **74** | **16** | **179** | **84** |
| Difference (Delta Without Project) | 48 | 105 | -9 | -2 | 46 | 178 | 286 | 31 | 8 | -10 | 95 | 19 |
| Difference (%) | 72% | 16% | -50% | -4% | 6% | 241% | 155% | 20% | 12% | -38% | 113% | 29% |