Volume III
Draft Environmental Impact Report
Technical Appendices

Church of the Woods

PCR

April 2010

Volume III
Draft Environmental Impact Report
Technical Appendices

Church of the Woods

Prepared For

County of San Bernardino
Land Use Services Department
385 North Arrowhead Avenue, First Floor
San Bernardino, California 92415-0182

Prepared By

PCR Services Corporation
233 Wilshire Boulevard, Suite 130
Santa Monica, California 90401
Tel: 310.451.4488
Fax: 310.451.5279

April 2010

TABLE OF CONTENTS – VOLUME III

APPENDIX G: NOISE IMPACT ANALYSIS

- LSA Associates, Inc., Noise Impact Analysis Church of the Woods, April 2009

APPENDIX H: TRAFFIC STUDY AND SUPPLEMENTAL CORRESPONDENCE

- LSA Associates, Inc., Draft Traffic Study Church of the Woods, April 14, 2006
- LSA Associates, Inc., Supplemental Correspondence, March 30, 2010

APPENDIX I: GLOBAL CLIMATE CHANGE TECHNICAL STUDY

- PCR Services Corporation, Global Climate Change Technical Study, August 6, 2009

Appendix G

Noise Impact Analysis

LSA Associates, Inc.

Noise Impact Analysis Church of the Woods

April 2009

NOISE IMPACT ANALYSIS

CHURCH OF THE WOODS

Submitted to:

County of San Bernardino

Prepared by:

LSA Associates, Inc.
20 Executive Park, Suite 200
Irvine, California 92614-4731
(949) 553-0666

LSA Project No. CTW430

LSA

April 2009

TABLE OF CONTENTS

INTRODUCTION 1
PROJECT DESCRIPTION 2
PHASE I DEVELOPMENT 2
PHASE II DEVELOPMENT 2
PHASE III DEVELOPMENT 5
SETTING 7
METHODOLOGY RELATED TO NOISE IMPACT ASSESSMENT 7
CHARACTERISTICS OF SOUND 7
EXISTING NOISE ENVIRONMENT 9
IMPACTS AND MITIGATION MEASURES 18
THRESHOLDS OF SIGNIFICANCE 18
LESS THAN SIGNIFICANT IMPACTS 21
SIGNIFICANT IMPACTS AND MITIGATION MEASURES 26
MITIGATION MEASURES 29
CUMULATIVE IMPACTS 30
REFERENCES 30

APPENDICES

A: COUNTY OF SAN BERNARDINO NOISE REGULATIONS
B: FHWA TRAFFIC NOISE MODEL PRINTOUTS
C: PROTECTIVE NOISE LEVELS: CONDENSED VERSION OF EPA LEVELS
D: STATIONARY SOURCE NOISE CALCULATIONS

FIGURES AND TABLES

FIGURES

Figure 1: Project Location Map 3
Figure 2: Site Plan 4
Figure 3: Ambient Noise Monitoring Locations 15

TABLES

Table A: Definitions of Acoustical Terms 10
Table B: Common Sound Levels and Their Noise Sources 11
Table C: Land Use Compatibility for Exterior Community Noise 12
Table D: Ambient Noise Monitoring Results 13
Table E: 24-Hour Noise Monitoring Results (dBA) 14
Table F: Existing Traffic Noise Levels 17
Table G: Noise Standards for Adjacent Mobile Noise Sources (dBA CNEL) 19
Table H: Hourly Noise Level Performance Standards—Locally Regulated Sources (dBA) 20
Table I: Stationary Source Noise Level Performance Standards (dBA) 21
Table J: Future (2030) Baseline Traffic Noise Levels 22
Table K: Future (2030) With Project Traffic Noise Levels 23
Table L: Combined Stationary Noise Source Impact (dBA) 25
Table M: Typical Maximum Construction Equipment Noise Levels (L_{max}) 28

INTRODUCTION

This noise impact analysis has been prepared to evaluate the potential noise impacts and mitigation measures associated with the Church of the Woods project located in unincorporated San Bernardino County (County), California. This report is intended to satisfy the County's requirement for a project-specific noise impact analysis by examining the impacts of the proposed project on noise-sensitive uses in the project area and evaluating the mitigation measures incorporated as part of the project design.

PROJECT DESCRIPTION

The proposed site of the Church of the Woods is located in Rimforest, in unincorporated San Bernardino County. The site is approximately 37 ac and is located on the north side of State Route 18 (SR-18, Rim of the World Highway) between Bear Springs Road and Daley Canyon Road. There are currently no active land uses on the site. Figure 1 shows the project location. Figure 2 presents a conceptual site plan for the project.

PHASE I DEVELOPMENT

Phase I of the project would consist of development of approximately 5.2 acres (ac) of the project site with construction of a 27,364-square-foot (sf), two-story assembly building; recreational facilities; a soccer field and a small baseball field; a temporary outdoor amphitheater; and associated parking (approximately 390 spaces). The assembly building would be used for Sunday morning and Wednesday evening services and various meetings and activities during the week. This building would also be made available for scheduled use by the community for local groups such as the Arrowhead Arts, Rotary Club, Boy Scouts, and Girl Scouts. The recreational facilities would be located adjacent to the youth center and would include volleyball and basketball courts, as well as a skateboard park. Volleyball and basketball games would be held during the evenings on Monday and Wednesday and during the day and evening on Saturday, with an average of 30 participants. The skateboard park would be open Wednesday and Friday evenings and during the day on Saturday, with approximately 30–50 participants per evening. The sports fields, including a small snack bar and restrooms just east of the baseball diamond, would be located on the southwestern portion of the project site. Soccer and baseball games would take place Monday through Friday afternoons and all day on Saturday. No evening uses, lighting, or amplified sound is proposed for the sports fields. In addition, concrete paths/walkways are proposed to follow the contours of the landscaped manufactured slopes on the western portion of the project site. The temporary outdoor amphitheater, which would be replaced with a worship center in Phase III, would be located north of the youth center. The amphitheater has a seating capacity of 600 and would be used primarily for Sunday morning services from 9:00 a.m. to 11:00 a.m. and on Wednesday evenings from 6:30 p.m. to 8:00 p.m., weather permitting. The amphitheater would also be used for up to three concerts per year. These concerts would be held on a Friday or Saturday evening from approximately 5:00 p.m. to 9:00 p.m. with an estimated attendance of between 200–500 people per concert. The amphitheater use would include lighting and amplified sound.

PHASE II DEVELOPMENT

Phase II of the project would involve development of an additional 13.2 ac of the project site and include a 41,037 sf, two-story auditorium/assembly area and children's ministry, a 2,500 sf, two-story maintenance/caretaker unit, and additional parking (approximately 130 spaces, for a total of 520 spaces on site). The auditorium and children's ministry buildings would be located immediately east

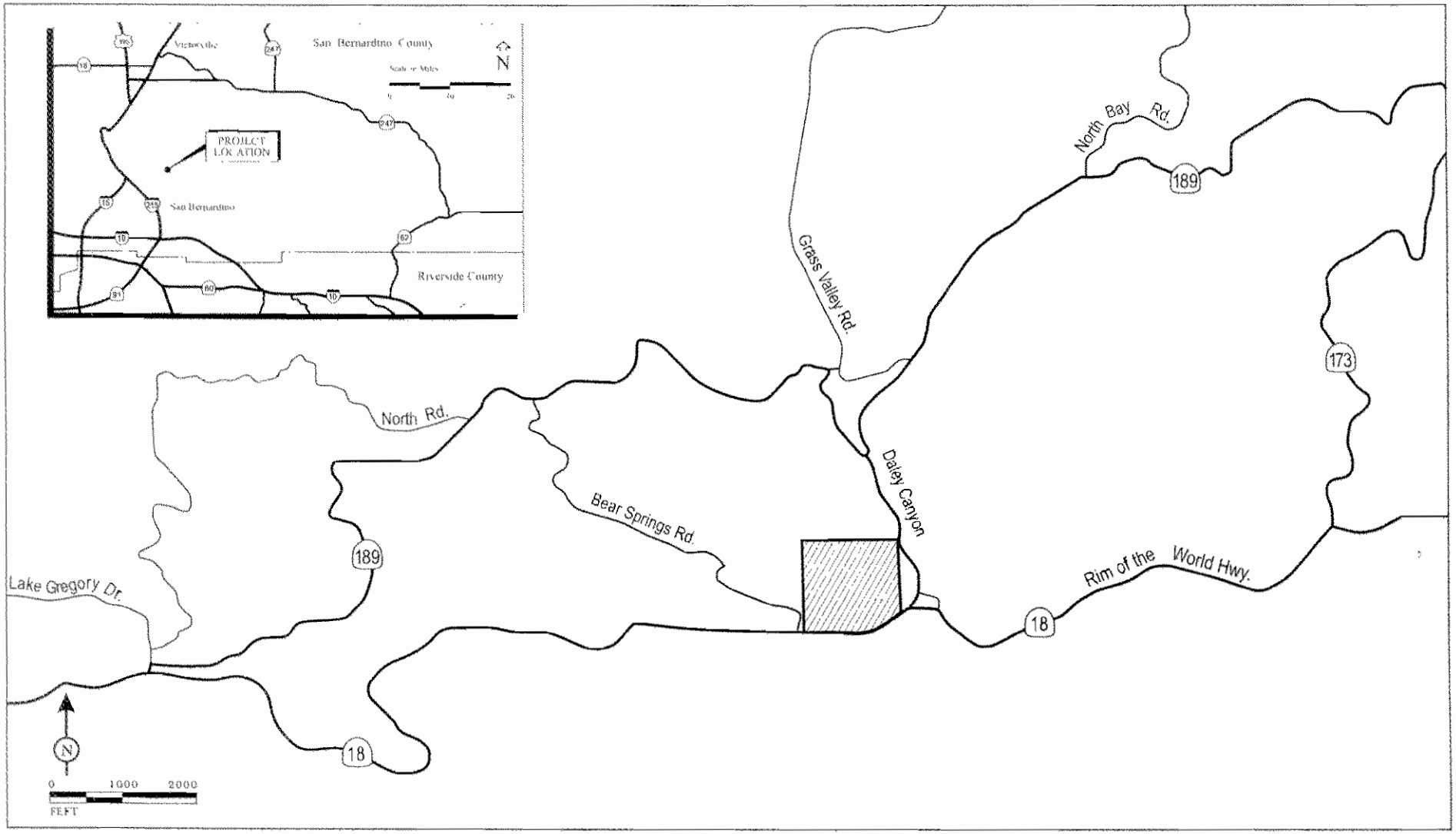

LSA

FIGURE 1

PROJECT LOCATION

Church of the Woods

Project Location

R:\CTW430\Graphics\Traffic\proj loc.cdr (1/21/05)

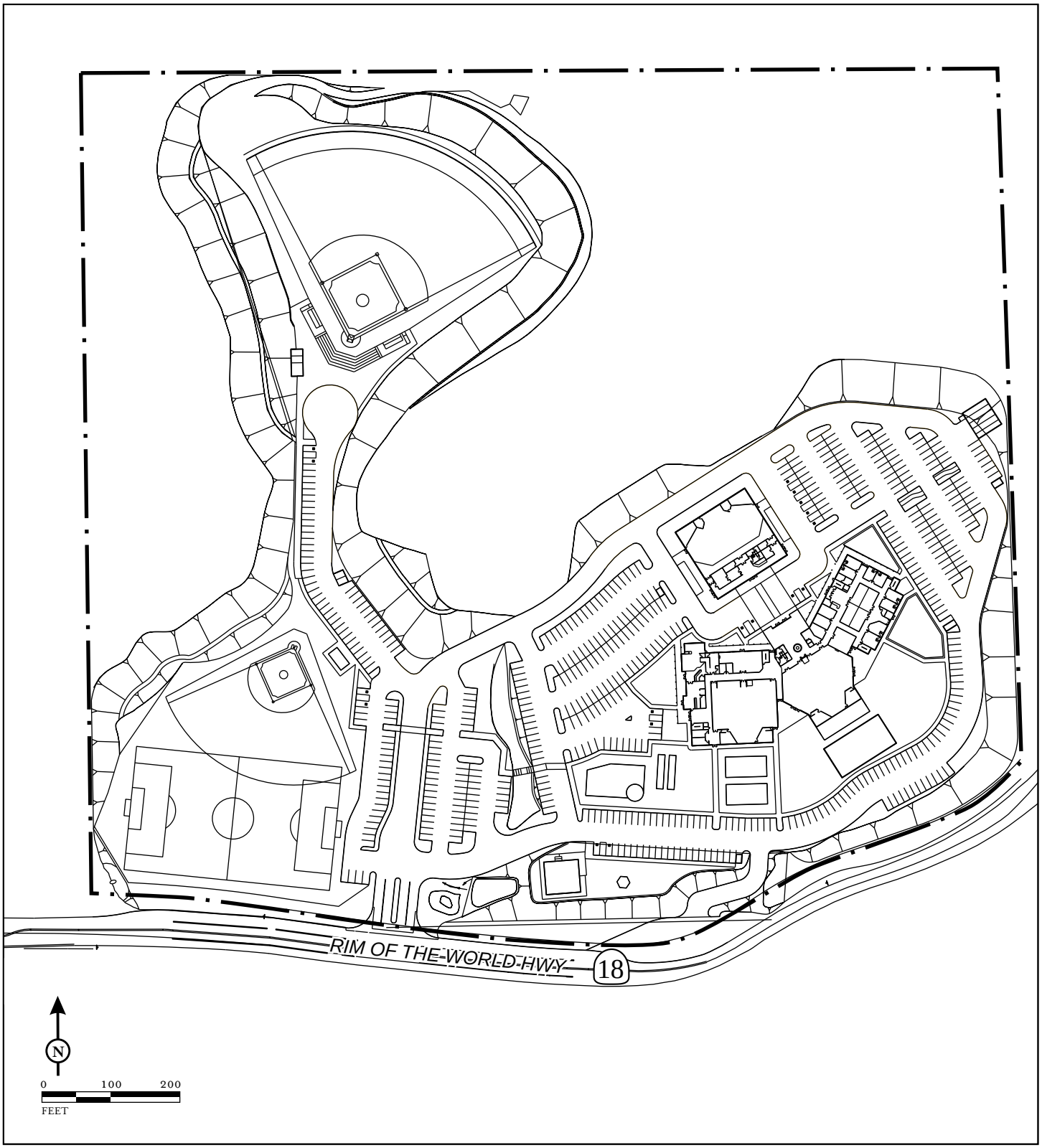

LSA

FIGURE 2

PROJECT BOUNDARY

Church of the Woods

Conceptual Site Plan

SOURCE: Church of the Woods, 2005.

R:\CTW430\Graphics\Traffic\siteplan.cdr (02/11/05)

of the youth center and would serve as an extension of the Phase I building to create one interconnected facility. The children's ministry area and youth center gymnatorium would accommodate Sunday School and various youth activities, while the auditorium/assembly area would replace the youth center gymnatorium as the assembly area for Sunday and Wednesday services and other programs. Overall seating capacity of the auditorium and children's ministry would accommodate 600 people. The maintenance/caretaker unit would be near the eastern boundary of the project site at the edge of the parking lot north of the children's ministry building. In addition, picnic areas and child play areas are proposed immediately to the south and east of the new youth center/ auditorium/children's ministry facility, respectively.

PHASE III DEVELOPMENT

Phase III of the project would involve development of an additional 6.8 ac, including a 23,510 sf, 1,200-seat worship center, a 3,073 sf chapel/retreat, a large baseball field, and additional parking (approximately 20 spaces, for a total of 540 spaces on-site). Sunday and Wednesday services would take place at the worship center instead of the assembly area. To accommodate the worship center, the temporary outdoor amphitheater would be removed, and the worship center would be constructed on the same location. In addition to the worship center, a small chapel/retreat building would be constructed just east of the site entrance. This building would be surrounded by an open space area, landscaped manufactured slopes, and a garden. The baseball field with bleachers would be located on the northwestern portion of the project site and would accommodate an additional 25 players and coaches during practice games on weekdays and 60 players, coaches, and spectators during games on Saturday. As with the baseball field proposed for Phase I, no field lighting or amplified sound is proposed for the large baseball field. A second snack bar and restroom building would be provided behind the bleachers to the west.

The worship center would have two Sunday services (from 8:30 a.m. to 10:00 a.m. and from 11:00 a.m. to 12:30 p.m.) and a Wednesday evening service from 6:30 p.m. to 8:30 p.m., with the office open Monday through Friday, 8:00 a.m. to 5:00 p.m. The site would also be available for special events associated with operation of the church, as well as for community sports clubs to utilize the play fields on Saturdays. The size of the congregation is anticipated to be 450 persons per service in Phases I and II, and 1,000 persons per service in Phase III. The church would conduct two services on Sundays and one service on Wednesdays, for all phases, and would ultimately employ a staff of approximately 15. Upon completion of all phases, on-site occupancy would range from around 40 on weekday mornings to 1,000 during the Sunday services and special events, as described below.

Typically two to three special events would be scheduled per year, generally taking place during the day between 9:00 a.m. and 9:00 p.m. on a Saturday or Sunday. Attendance at these special events could be up to 1,000 people. An example of a special event is the "Freedom Celebration," which occurs on the Sunday closest to the Fourth of July. This includes a church service, picnic, games, and music. Other anticipated special events include a Christmas Celebration and softball game/picnic.

In addition to special events, a variety of programs would be scheduled on a weekly basis over a set period of time. These programs would usually be held from 6:30 p.m. to 8:30 p.m. during the week. There are 2–3 programs anticipated to be scheduled during the year. Estimated attendance of these programs would be approximately 300 people. An example of a special program is "True Love

Waits," which would occur on a weekday evening from 6:30 p.m. to 8:30 p.m. for 12 weeks. Other programs may be scheduled from 4 to 6 weeks' duration.

As described for Phase I, the assembly area and other church facilities would be available for local community group events. Approximately five to six community group events are expected throughout the year, with attendance ranging between 25 and 300 people per event. The events would normally be held during the week between 6:00 p.m. to 9:00 p.m. or during the day on Saturday.

SETTING

METHODOLOGY RELATED TO NOISE IMPACT ASSESSMENT

Evaluation of noise impacts associated with a proposed church/recreational area project typically includes the following:

- Determine the short-term construction noise impacts on off-site noise-sensitive uses
- Determine the long-term noise impacts, including vehicular traffic, on-site and off-site noise-sensitive uses
- Determine the required mitigation measures to reduce long-term noise impacts from all sources

CHARACTERISTICS OF SOUND

Sound is increasing to such disagreeable levels in our environment that it can threaten our quality of life. Noise is usually defined as unwanted sound. Noise consists of any sound that may produce physiological or psychological damage and/or interfere with communication, work, rest, recreation, and sleep. To the human ear, sound has two significant characteristics: pitch and loudness. Pitch is generally an annoyance, while loudness can affect our ability to hear. Pitch is the number of complete vibrations or cycles per second of a wave that result in the tone's range from high to low. Loudness is the strength of a sound that describes a noisy or quiet environment and is measured by the amplitude of the sound wave. Loudness is determined by the intensity of the sound waves combined with the reception characteristics of the human ear. Sound intensity refers to how hard the sound wave strikes an object, which in turn produces the sound's effect. This characteristic of sound can be precisely measured with instruments. The analysis of a project defines the noise environment of the project area in terms of sound intensity and its effect on adjacent sensitive land uses.

Measurement of Sound

Sound intensity is measured through the A-weighted scale (i.e., dBA) to correct for the relative frequency response of the human ear. That is, an A-weighted noise level de-emphasizes low and very high frequencies of sound similar to the human ear's de-emphasis of these frequencies. Unlike linear units such as inches or pounds, decibels are measured on a logarithmic scale, representing points on a sharply rising curve. For example, 10 decibels are 10 times more intense than 1 decibel, 20 decibels are 100 times more intense, and 30 decibels are 1,000 times more intense. Thirty decibels represent 1,000 times as much acoustic energy as one decibel. A sound as soft as human breathing is about 10 times greater than 0 decibel. The decibel system of measuring sound gives a rough connection between the physical intensity of sound and its perceived loudness to the human ear. A 10-decibel increase in sound level is perceived by the human ear as only a doubling of the loudness of the sound. Ambient sounds generally range from 30 dBA (very quiet) to 100 dBA (very loud).

Sound levels are generated from a source, and their decibel level decreases as the distance from that source increases. Sound dissipates exponentially with distance from the noise source. For a single point source, sound levels decrease approximately six decibels for each doubling of distance from the source. For example, an object generating 86 decibels at a distance of 50 feet (ft) would generate 80 decibels at 100 ft and 74 decibels at 200 ft. This drop-off rate is appropriate for noise generated by stationary equipment. If noise is produced by a line source such as highway traffic or railroad operations, the sound decreases three decibels for each doubling of distance in a hard site environment. Line source noise in a relatively flat environment with absorptive vegetation decreases four and one-half decibels for each doubling of distance. Therefore, a roadway generating 70 decibels at 50 ft would generate 67 decibels at 100 ft in a hard site environment and 66.5 decibels at 100 ft in a soft site environment.

There are many ways to rate noise for various time periods, but an appropriate rating of ambient noise affecting humans also accounts for the annoying effects of sound. However, the predominant rating scales for human communities in the State of California are the Equivalent-Continuous sound level (L_{eq}) and Community Noise Equivalent (CNEL) based on A-weighted decibels (dBA). L_{eq} is the total sound energy of time-varying noise over a sample period. CNEL is the time-varying noise over a 24-hour period, with a weighting factor of 5 dBA applied to the hourly L_{eq} for noises occurring from 7:00 p.m. to 10:00 p.m. (defined as relaxation hours) and with a weighting factor of 10 dBA from 10:00 p.m. to 7:00 a.m. (defined as sleeping hours). The noise adjustments are added to the noise events occurring during the more sensitive hours. Day-night average noise (L_{dn}) is similar to the CNEL but without the adjustment for nighttime noise events. CNEL and L_{dn} are normally exchangeable and within 1 dB of each other. Other noise-rating scales of importance when assessing annoyance factor include the maximum noise level, or L_{max}, and percentile noise exceedance levels, or L_N. L_{max} is the highest exponential time-averaged sound level that occurs during a stated time period. It reflects peak operating conditions and addresses the annoying aspects of intermittent noise. L_N is the noise level that is exceeded “N” percent of the time during a specified time period. For example, the L_{10} noise level represents the noise level exceeded 10 percent of the time during a stated period. The L_{50} noise level represents the median noise level. Half the time the noise level exceeds this level and half the time it is less than this level. The L_{90} noise level represents the noise level exceeded 90 percent of the time and is considered the lowest noise level experienced during a monitoring period. It is normally referred to as the background noise level.

Psychological and Physiological Effects of Noise

Physical damage to human hearing begins at prolonged exposure to noise levels higher than 85 dBA. Exposure to high noise levels affects our entire system, with prolonged noise exposure in excess of 75 dBA increasing body tensions and thereby affecting blood pressure, functions of the heart, and the nervous system. In comparison, extended periods of noise exposure above 90 dBA would result in permanent cell damage. When the noise level reaches 120 dBA, a tickling sensation occurs in the human ear even with short-term exposure. This level of noise is called the threshold of feeling. As the sound reaches 140 dBA, the tickling sensation is replaced by the feeling of pain in the ear. This is called the threshold of pain. A sound level of 160 to 165 dBA can result in dizziness and loss of equilibrium. The ambient or background noise problem is widespread and generally more concentrated in urban areas than in outlying less developed areas.

Table A lists "Definitions of Acoustical Terms." Table B shows "Common Sound Levels and Their Sources." Table C shows "Land Use Compatibility for Exterior Community Noise" recommended by the California Department of Health, Office of Noise Control.

EXISTING NOISE ENVIRONMENT

Sensitive Land Uses in the Project Vicinity

Certain land uses are considered more sensitive to noise than others. Examples of these include residential areas, educational facilities, hospitals, childcare facilities, and senior housing. The proposed project site is located in a rural, wooded area. The closest off-site sensitive land uses to the project site are the rural residences located at a distance of 90 ft west of the proposed southern play fields. The closest residences to the northern baseball diamond are located at a distance of 280–300 ft to the west.

Overview of the Existing Noise Environment

The primary existing noise sources in the project area are transportation facilities. Traffic on Rim of the World Highway (SR-18), Bear Springs Road, and Daley Canyon Road is the dominant source contributing to area ambient noise levels at the residences to the west. Noise from motor vehicles is generated by engine vibrations, the interaction between the tires and the road, and the exhaust system. Noise levels on and in the vicinity of the project site will change as a result of the proposed project. Potential noise impacts associated with the project include road noise due to increases in vehicular traffic, on-site noise from activities within the proposed play fields, and construction noise.

Ambient Noise Levels. An ambient noise survey was conducted on-site by an LSA noise specialist on September 15, 2005. Ambient noise levels at two on-site locations were recorded. Table D lists the locations and noise sources observed during the noise survey, as well as the noise levels recorded at these two locations. Vehicular traffic was the dominant noise source in the project vicinity. No major stationary sources, such as generators or large air-conditioning units, were identified in the project vicinity.

Table D shows that the location closer to Highway 18 registered a higher ambient noise level (57.4 dBA L_{eq}) than the location at the rear of the property adjacent to the existing residences (40.1 dBA L_{eq}).

To determine the potential noise impacts from the proposed on-site noise sources, a long-term 24-hour noise measurement was conducted on site from September 15–16, 2005. The noise meter was located at the rear of the property adjacent to the existing residences. The results of this monitoring are shown in Table E. As shown, the existing on-site noise levels did not exceed the County's L_{eq} or L_{max} noise standards. The 24-hour CNEL noise level at this location is 46.7 dBA. The ambient Noise Monitoring Locations are shown in Figure 3.

Table A: Definitions of Acoustical Terms

Term	Definitions
Decibel, dB	A unit of level that denotes the ratio between two quantities that are proportional to power; the number of decibels is 10 times the logarithm (to the base 10) of this ratio.
Frequency, Hz	Of a function periodic in time, the number of times that the quantity repeats itself in one second (i.e., number of cycles per second).
A-Weighted Sound Level, dBA	The sound level obtained by use of A-weighting. The A-weighting filter de-emphasizes the very low and very high frequency components of the sound in a manner similar to the frequency response of the human ear and correlates well with subjective reactions to noise. All sound levels in this report are A-weighted, unless reported otherwise.
L_{01}, L_{10}, L_{50}, L_{90}	The fast A-weighted noise levels that are equaled or exceeded by a fluctuating sound level 1 percent, 10 percent, 50 percent, and 90 percent of a stated time period.
Equivalent Continuous Noise Level, L_{eq}	The level of a steady sound that, in a stated time period and at a stated location, has the same A-weighted sound energy as the time-varying sound.
Community Noise Equivalent Level, CNEL	The 24-hour A-weighted average sound level from midnight to midnight, obtained after the addition of 5 dBA to sound levels occurring in the evening from 7:00 p.m. to 10:00 p.m. and after the addition of 10 dBA to sound levels occurring in the night between 10:00 p.m. and 7:00 a.m.
Day/Night Noise Level, L_{dn}	The 24-hour A-weighted average sound level from midnight to midnight, obtained after the addition of 10 dBA to sound levels occurring in the night between 10:00 p.m. and 7:00 a.m.
L_{max}, L_{min}	The maximum and minimum A-weighted sound levels measured on a sound level meter, during a designated time interval, using fast time averaging.
Ambient Noise Level	The all encompassing noise associated with a given environment at a specified time, usually a composite of sound from many sources at many directions, near and far; no particular sound is dominant.
Intrusive	The noise that intrudes over and above the existing ambient noise at a given location. The relative intrusiveness of a sound depends upon its amplitude, duration, frequency, and time of occurrence and tonal or informational content as well as the prevailing ambient noise level.

Source: Handbook of Acoustical Measurements and Noise Control 1991.

Table B: Common Sound Levels and Their Noise Sources

Noise Source	A-Weighted Sound Level in Decibels	Noise Environment	Subjective Evaluation
Near Jet Engine	140	Deafening	128 times as loud
Civil Defense Siren	130	Threshold of Pain	64 times as loud
Hard Rock Band	120	Threshold of Feeling	32 times as loud
Accelerating Motorcycle at a Few Feet Away	110	Very Loud	16 times as loud
Noisy Urban Street/Heavy City Traffic	100	Very Loud	8 times as loud
Ambulance Siren; Food Blender	95	Very Loud	
Garbage Disposal	90	Very Loud	4 times as loud
Freight Cars; Living Room Music	85	Loud	
Pneumatic Drill; Vacuum Cleaner	80	Loud	2 times as loud
Busy Restaurant	75	Moderately Loud	
Near Freeway Auto Traffic	70	Moderately Loud	Baseline
Average Office	60	Quiet	One-half as loud
Suburban Street	55	Quiet	
Light Traffic; Soft Radio Music in Apartment	50	Quiet	One-quarter as loud
Large Transformer	45	Quiet	
Average Residence without Stereo Playing	40	Faint	One-eighth as loud
Soft Whisper	30	Faint	
Rustling Leaves	20	Very Faint	
Human Breathing	10	Very Faint	Threshold of Hearing
	0	Very Faint	

Source: Compiled by LSA Associates, Inc. 1998.

Table C: Land Use Compatibility for Exterior Community Noise

Land Use Category	Noise Range (L_{dn} or CNEL), dB			
	I	II	III	IV
Passively used open spaces	50	50–55	55–70	70+
Auditoriums, concert halls, amphitheaters	45–50	50–65	65–70	70+
Residential: low-density single-family, duplex, mobile homes	50–55	55–70	70–75	75+
Residential: multifamily	50–60	60–70	70–75	75+
Transient lodging: motels, hotels	50–60	60–70	70–80	80+
Schools, libraries, churches, hospitals, nursing homes	50–60	60–70	70–80	80+
Actively used open spaces: playgrounds, neighborhood parks	50–67	—	67–73	73+
Golf courses, riding stables, water recreation, cemeteries	50–70	—	70–80	80+
Office buildings, business commercial and professional	50–67	67–75	75+	—
Industrial, manufacturing, utilities, agriculture	50–70	70–75	75+	—

Source: Office of Noise Control, California Department of Health 1976.

Noise Range I—Normally Acceptable: Specified land use is satisfactory, based upon the assumption that any buildings involved are of normal conventional construction, without any special noise insulation requirements.

Noise Range II—Conditionally Acceptable: New construction or development should be undertaken only after a detailed analysis of the noise reduction requirements is made and needed noise insulation features are included in the design. Conventional construction, but with closed windows and fresh air supply systems or air conditioning, will normally suffice.

Noise Range III—Normally Unacceptable: New construction or development should generally be discouraged. If new construction or development does proceed, a detailed analysis of the noise reduction requirements must be made and needed noise insulation features included in the design.

Noise Range IV—Clearly Unacceptable: New construction or development should generally not be undertaken.

CNEL = Community Noise Equivalent Level
dB = decibel
L_{dn} = day-night average noise

Table D: Ambient Noise Monitoring Results

Site	Location	Date	Start Time	Duration (minutes)	L_{eq}	L_{max}	L_{min}	L_2	L_8	L_{25}	L_{50}	Noise Sources
1	100 ft north of Highway 18 near the proposed ball field location	09/15/05	9:53 a.m.	20	57.4	66.8	39.9	62.8	60.4	58.4	56.7	Traffic on Highway 18 and birds
2	Approximately 750 ft from Highway 18 adjacent to existing residences	9/15/05	9:30 a.m.	20	40.1	63.6	34.2	45.0	42.3	40.3	38.7	Some traffic noise and birds
County's Daytime Stationary Noise Source Threshold					55	75						

Source: LSA Associates, Inc., September 2005.
ft = feet
L_2 = the noise level exceeded 2 percent of the time during a stated period
L_8 = the noise level exceeded 8 percent of the time during a stated period
L_{25} = the noise level exceeded 25 percent of the time during a stated period
L_{50} = the noise level representing the median noise level; half the time the noise level exceeds this level and half the time it is less than this level
L_{eq} = equivalent continuous noise level over a specified period of time (acoustical energy of a given measurement)
L_{max} = maximum instantaneous noise level
L_{min} = minimum instantaneous noise level

Table E: 24-Hour Noise Monitoring Results (dBA)

Hour/Day	L_{eq}	L_{max}	L_{min}
10:00 a.m., 9/15/05	41.1	55.6	33.9
11:00 a.m., 9/15/05	47.5	68.8	35.4
12:00 p.m., 9/15/05	41.7	54.6	35.9
1:00 p.m., 9/15/05	42.0	54.0	33.9
2:00 p.m., 9/15/05	42.5	54.7	37.6
3:00 p.m., 9/15/05	46.8	67.4	38.6
4:00 p.m., 9/15/05	44.9	61.6	39.3
5:00 p.m., 9/15/05	43.4	60.6	35.3
6:00 p.m., 9/15/05	41.9	57.7	35.1
7:00 p.m., 9/15/05	40.4	61.4	34.0
8:00 p.m., 9/15/05	41.3	54.2	35.6
9:00 p.m., 9/15/05	41.9	53.9	36.3
10:00 p.m., 9/15/05	38.1	49.9	32.7
11:00 p.m., 9/15/05	37.8	48.7	33.4
12:00 a.m., 9/16/05	36.4	43.8	32.3
1:00 a.m., 9/16/05	35.0	44.9	32.0
2:00 a.m., 9/16/05	35.2	43.8	32.0
3:00 a.m., 9/16/05	35.3	46.9	29.8
4:00 a.m., 9/16/05	35.5	48.2	29.7
5:00 a.m., 9/16/05	38.8	52.5	30.9
6:00 a.m., 9/16/05	43.7	54.7	34.7
7:00 a.m., 9/16/05	50.2	74.5	34.8
8:00 a.m., 9/16/05	45.5	65.3	34.3
9:00 a.m., 9/16/05	39.7	50.0	34.3
10:00 a.m., 9/16/05	41.6	52.4	37.3
CNEL		46.7	

Source: LSA Associates, Inc., September 2005.
CNEL = Community Noise Equivalent Level
dBA = A-weighted decibel
L_{eq} = equivalent continuous noise level over a specified period of time (acoustical energy of a given measurement)
L_{max} = maximum instantaneous noise level
L_{min} = minimum instantaneous noise level

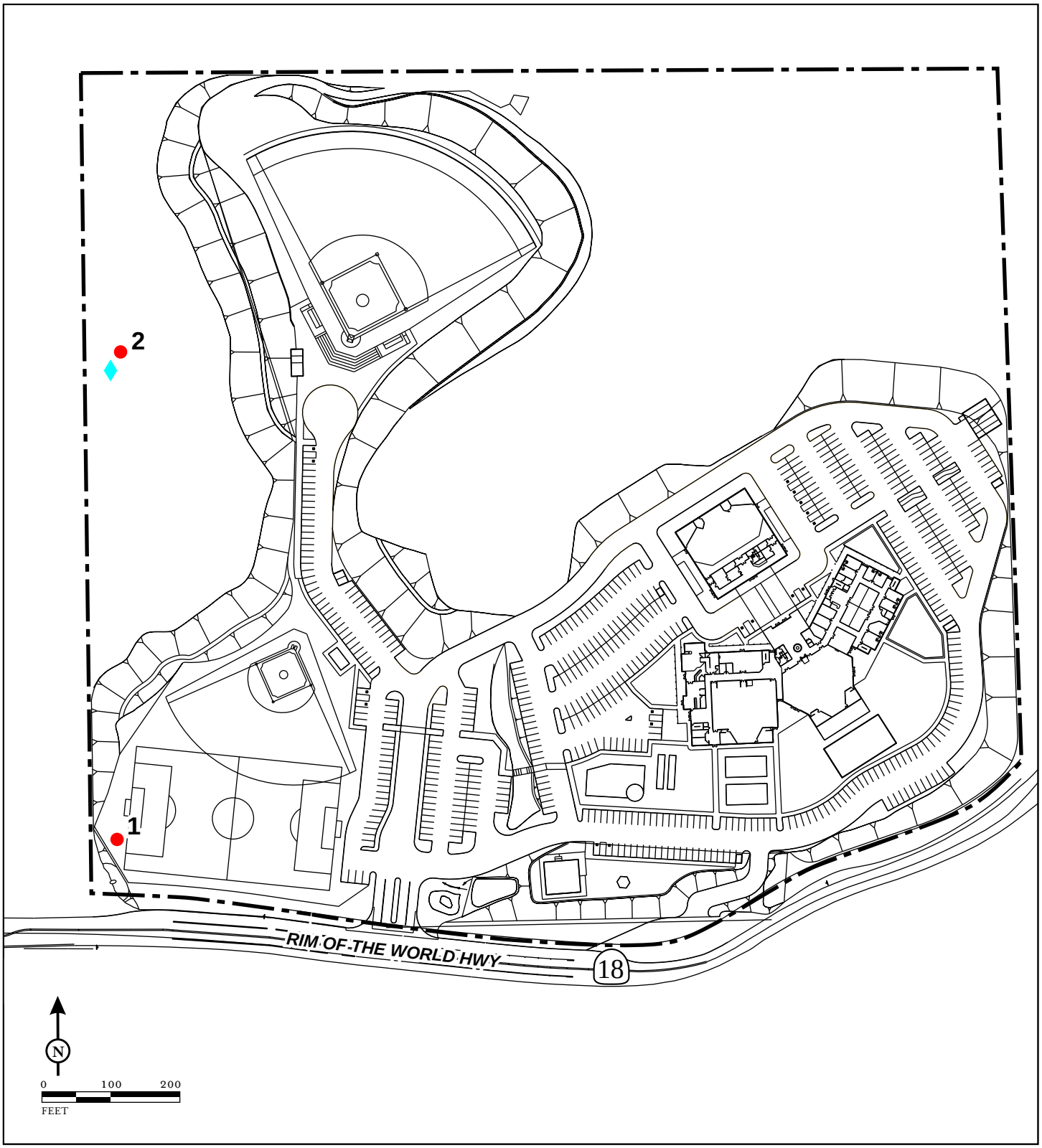

LSA

Project Boundary

Short-term noise monitoring location

24-hour monitoring location

FIGURE 3

Church of the Woods

Ambient Noise Monitoring Locations

SOURCE: Church of the Woods, 2005.

I:\CTW430\G\Noise Locs.cdr (3/7/07)

Existing Traffic Noise. Existing traffic noise levels in the study area are listed in Table F. The FHWA highway traffic noise prediction model (FHWA RD-77-108) was used to evaluate highway traffic-related noise conditions in the project vicinity. This model requires various parameters, including traffic volumes, vehicle mix, vehicle speed, and roadway geometry to compute typical equivalent noise levels during daytime, evening, and nighttime hours. The existing average daily traffic (ADT) volumes in the area were taken from the *Traffic Impact Analysis* prepared for the project (LSA, June 2008). The resultant noise levels are weighted and summed over 24-hour periods to determine the CNEL values. As shown in Table F, traffic noise along these roadway segments is generally low to moderate. The 70 dBA CNEL traffic noise contour is confined within the roadway right-of-way for all of the roadway segments. The existing residences along Bear Springs Road, adjacent to the proposed southern play fields, are located at a distance of 140 to 280 ft from the centerline of SR-18. At this distance the existing traffic noise levels at these residences range from 56 to 61 dBA CNEL.

Based on the traffic noise levels listed in Table F, the existing traffic noise level at short-term ambient Noise Monitoring Location No. 1 would be 65 dBA CNEL. Based on the long-term ambient noise monitoring listed in Table E, the noise level measured at 10:00 a.m. is approximately 5 dBA lower than the 24-hour CNEL level. Therefore, the measured CNEL at Noise Monitoring Location No. 1 is approximately 62.4 dBA CNEL. The traffic noise model is accurate to within 3 dBA CNEL.

Topographic Effects. The proposed project is located in the mountainous region of San Bernardino County. Therefore, there is the potential for noise levels generated within the proposed development to be augmented by canyon effects. Occasionally, canyon effects occur when the surrounding topography creates a channel off of which noise reflects. Studies of highway noise have shown that canyon effects can result in noise increases of up to 3 dBA; however, unless the slopes adjacent to the noise source are vertical, the buildup of noise will be limited. The slopes within the vicinity of the proposed project are covered in soft, noise-absorbing vegetation and are not vertical. Therefore, the potential canyon effects are anticipated to be negligible.

Table F: Existing Traffic Noise Levels

Roadway Segment	ADT	Center-line to 70 CNEL (ft)	Center-line to 65 CNEL (ft)	Center-line to 60 CNEL (ft)	CNEL (dBA) 50 ft from Outermost Lane
Bear Springs Road north of SR-189	1,700	< 50[1]	< 50	< 50	59.2
Bear Springs Road between SR-189 and SR-18	700	< 50	< 50	< 50	55.3
Daley Canyon Road between SR-189 and Daley Canyon Access	5,800	< 50	52	112	64.5
Daley Canyon Road between Daley Canyon Access and SR-18	5,100	< 50	< 50	102	64.0
SR-173 north of SR-18	5,200	< 50	< 50	104	64.0
SR-18 west of Lake Gregory Drive	8,600	< 50	67	145	66.2
SR-18 between Lake Gregory Drive and Bear Springs Road	9,500	< 50	72	155	66.7
SR-18 between Bear Springs Road and Project Access	10,100	< 50	75	161	66.9
SR-18 between Project Access and Daley Canyon Road	10,100	< 50	75	161	66.9
SR-18 between Daley Canyon Road and Daley Canyon Access	5,600	< 50	51	109	64.4
SR-18 between Daley Canyon Access and SR-173	7,800	< 50	63	136	65.8
SR-18 east of SR-173	4,900	< 50	< 50	100	63.8
SR-189 between Lake Gregory Drive and North Road	3,200	< 50	< 50	75	61.9
SR-189 between North Road and Bear Springs Road	4,200	< 50	< 50	90	63.1
SR-189 between Bear Springs Road and Grass Valley Road	4,100	< 50	< 50	89	63.0
SR-189 between Grass Valley Road and Daley Canyon Road	5,100	< 50	< 50	102	64.0
SR-189 between Daley Canyon Road and North Bay Road	7,100	< 50	59	128	65.4
SR-189 east of North Bay Road	5,300	< 50	< 50	105	64.1

Source: LSA Associates, Inc., June 2008.

[1] Traffic noise within 50 ft of a roadway centerline requires site-specific analysis.

ADT = average daily traffic
CNEL = Community Noise Equivalent Level
dBA = A-weighted decibel
ft = feet
SR-18 = State Route 18
SR-173 = State Route 173
SR-189 = State Route 189

IMPACTS AND MITIGATION MEASURES

Implementation of the proposed project would result in short-term construction and long-term traffic and stationary noise impacts. Once the project has been completed, the noise generated by on-site activities may impact neighboring sensitive uses. The following discussion focuses on the increase in noise associated with the construction and operation of the proposed project and the traffic in the project area.

THRESHOLDS OF SIGNIFICANCE

The noise significance thresholds presented below are based on industry standards and standards provided by the County of San Bernardino. Most people can detect changes in sound levels of approximately 3 dBA under normal, quiet conditions. Changes of 1 to 3 dBA are detectable under quiet, controlled conditions, and changes of less than 1 dBA are usually indiscernible. A change of 5 dBA is readily discernable to most people in an exterior environment. Based on these factors and the County's noise policies and standards (listed below), noise impacts are considered significant if any of the following conditions are met.

- The project's operational noise sources increase ambient levels at the nearest receptor above the maximum allowable noise level, based on the land use classification
- The project's mobile sources of noise increase the ambient CNEL more than 5 dBA at the nearest sensitive receptors for areas within San Bernardino County that are not designated as "noise impacted"
- The project's mobile sources of noise increase the ambient CNEL more than 3 dBA at the nearest sensitive receptors for areas within San Bernardino County that are designated as "noise impacted"
- The project's operational stationary sources of noise increase the ambient L_{eq} more than 5 dBA at the nearest sensitive receptors for areas within San Bernardino County that are not designated as "noise impacted"
- The project's operational stationary sources of noise increase the ambient L_{eq} more than 3 dBA at the nearest sensitive receptors for areas within San Bernardino County that are designated as "noise impacted"

A cumulative impact is considered significant if any of the following conditions are met:

- The cumulative noise levels from the project and related projects increase the ambient levels by more than 5 dBA for areas within San Bernardino County that are not designated as "noise impacted"
- The cumulative noise levels from the project and related projects increase the ambient levels by more than 3 dBA for areas within San Bernardino County that are designated as "noise impacted"

County of San Bernardino Noise Standards

The County has adopted a Noise Element (2007) in its General Plan. One of the general goals of the County Noise Element is to develop and adopt specific policies and an effective implementation program to abate and avoid excessive noise exposures in the County by requiring that effective noise-mitigation measures be incorporated into the design of new noise-generating and new noise-sensitive land uses. Specific policies have been adopted by the County to accomplish the goals of the Noise Element, including the following:

- The County will abate and avoid excessive noise exposure through noise mitigation measures incorporated into the design of new noise-generating and new noise-sensitive land uses, while protecting areas within the County where the present noise environment is within acceptable limits (Goal N1). The County's noise standards for land uses located adjacent to mobile noise sources are listed in Table G.

Table G: Noise Standards for Adjacent Mobile Noise Sources (dBA CNEL)

Categories	Land Use	Interior Standard[1]	Exterior Standard[2]
Residential	Single and multifamily, duplex, mobile homes	45	60[3]
Commercial	Hotel, motel, lodging, commercial retail	45	60[3]
	Commercial retail, bank	50	NA
	Office building	45	65
	Concert hall, auditorium	45	NA
Institutional	Hospital, school, church	45	65
Open Space	Park	NA	65

Source: County of San Bernardino Noise Element, 2007.
Notes:
1 The indoor environment shall exclude bathrooms, kitchens, toilets, closets, and corridors.
2 The outdoor environment shall be limited to:

- Hospital/office building patios
- Hotel and motel recreation areas
- Mobile home parks
- Multi-family private patios or balconies
- Park picnic areas
- Private yard of single-family dwellings
- School playgrounds

3 An exterior noise level of up to 65 dBA CNEL shall be allowed provided exterior noise levels have been substantially mitigated through a reasonable application of the best available noise reduction technology and interior noise exposure does not exceed 45 dBA CNEL with windows and doors closed. Requiring the windows and doors to remain closed to achieve an acceptable interior noise level shall necessitate the use of air conditioning or mechanical ventilation.

CNEL = Community Noise Equivalent Level dBA = A-weighted decibel NA = Not applicable.

- When industrial, commercial, or other land uses, including locally regulated noise sources, are proposed for areas containing noise-sensitive land uses, noise levels generated by the proposed use will not exceed the performance standards of Table H within outdoor activity areas. If outdoor activity areas have not yet been determined, noise levels shall not exceed the performance standards listed in Chapter 83.01 of the County's Development Code at the boundary of areas planned or zoned for residential or other noise-sensitive land uses (Goal N1.3). The L_{max} standards listed in Table H were established based on the noise limit categories included in Section 83.01.080 (c)(2) of the County's Development Code.

Table H: Hourly Noise Level Performance Standards—Locally Regulated Sources (dBA)

Land Use Category	7:00 a.m. to 10:00 p.m.		10:00 p.m. to 7:00 a.m.	
	L_{eq}	L_{max}	L_{eq}	L_{max}
Residential	55	75	45	65
Professional Services	55	75	55	75
Other Commercial	60	80	60	80
Industrial	70	90	70	90

Source: San Bernardino County Development Code, 2007.
dBA = A-weighted decibel
L_{eq} = equivalent continuous noise level over a specified period of time (acoustical energy of a given measurement)
L_{max} = maximum instantaneous noise level

Copies of the County's noise standards are included in Appendix A of this analysis.

Construction, repair, or demolition activities are limited to between the hours of 7:00 a.m. and 7:00 p.m. of any working day, Monday through Saturday. These activities are prohibited on Sundays and federal holidays.

Significant Impact Criteria

The ambient noise levels measured within the project area are similar to or lower than the County's stationary noise source thresholds. Therefore, the thresholds listed in Table I, based on the existing ambient noise levels, were used for determining significance. As on-site events would not occur during nighttime hours (10:00 p.m. to 7:00 a.m.), no nighttime noise thresholds were established. For areas currently experiencing noise levels exceeding the County's hourly performance standards, such as the hourly L_{eq} within the vicinity of SR-18, a significant noise impact would occur if a project increases the ambient noise level by 3 dBA or more. For locations where the existing ambient noise level is less than the County's hourly performance standards, a significant noise impact would occur if a project increases the ambient noise level by 5 dBA or more.

Table I: Stationary Source Noise Level Performance Standards (dBA)

Land Use Category	7:00 a.m. to 10:00 p.m.		10:00 p.m. to 7:00 a.m.	
	L_{eq}	L_{max}	L_{eq}	L_{max}
Residences located within 200 ft of SR-18	57[1]	75	N/A	N/A
Residences located within 500 ft of SR-18	50	75	N/A	N/A
Residences located within 800 ft of SR-18	40	75	N/A	N/A

Source: LSA Associates, 2008.
Notes:
[1] Ambient noise level exceeded the County's noise threshold. Therefore, exceeding the ambient noise level by 3 dBA would result in a significant noise impact.
ft = feet
L_{eq} = equivalent continuous noise level over a specified period of time (acoustical energy of a given measurement)
L_{max} = maximum instantaneous noise level
N/A = Not applicable
SR-18 = State Route 18

As shown in Table E, the noise levels that occur during the short-term ambient noise monitoring period (9:00 a.m. to 10 a.m.) are similar to or lower than the noise levels that occur during the evening hours (7:00 p.m. to 10:00 p.m.). Therefore, the standards listed in Table I are applicable to daytime and evening events.

LESS THAN SIGNIFICANT IMPACTS

Off-Site Traffic Impact

Tables J and K list future traffic noise levels in the project vicinity during the 2030 baseline and 2030 with project scenarios, respectively. These noise levels represent the worst-case scenario, which assumes that no shielding is provided between the traffic and the location where the noise contours are drawn. The specific assumptions used in developing these noise levels and the model printouts are provided in Appendix B.

Traffic noise levels would continue to be low to moderate. The data in Table K show that there is very little change in the traffic noise levels associated with the implementation of the project; all areas would increase less than 1 dBA. The largest increase in traffic noise level is along Bear Springs Road, where an increase of approximately 0.9 dBA is predicted. As changes in noise level of 3 dBA or less are not perceptible to the human ear in an outdoor environment, these noise level increases would be considered less than significant. No mitigation measures are required.

Stationary Source Noise Impacts

The proposed project is located within a rural area. Therefore, the noise impacts from the proposed play fields were calculated using a soft-site 7.5 dBA reduction per doubling of distance for point sources. However, due to the valley located between the proposed amphitheater and the existing homes to the west, the noise levels were calculated using a hard-site 6.0 dBA reduction per doubling of distance for point sources. The stationary source noise impact calculations are included in Appendix D.

Table J: Future (2030) Baseline Traffic Noise Levels

Roadway Segment	ADT	Center-line to 70 CNEL (ft)	Center-line to 65 CNEL (ft)	Center-line to 60 CNEL (ft)	CNEL (dBA) 50 Feet from Outermost Lane
Bear Springs Road north of SR-189	3,200	< 50[1]	< 50	75	61.9
Bear Springs Road between SR-189 and SR-18	1,300	< 50	< 50	< 50	58.0
Daley Canyon Road between SR-189 and Daley Canyon Access	11,200	< 50	80	173	67.4
Daley Canyon Road between Daley Canyon Access and SR-18	8,200	< 50	65	140	66.0
SR-173 north of SR-18	9,200	< 50	71	152	66.5
SR-18 west of Lake Gregory Drive	12,200	< 50	85	183	67.7
SR-18 between Lake Gregory Drive and Bear Springs Road	13,600	< 50	91	197	68.2
SR-18 between Bear Springs Road and Project Access	15,300	< 50	99	213	68.7
SR-18 between Project Access and Daley Canyon Road	15,300	< 50	99	213	68.7
SR-18 between Daley Canyon Road and Daley Canyon Access	7,300	< 50	61	130	65.5
SR-18 between Daley Canyon Access and SR-173	11,800	< 50	83	179	67.6
SR-18 east of SR-173	7,300	< 50	61	130	65.5
SR-189 between Lake Gregory Drive and North Road	4,400	< 50	< 50	93	63.3
SR-189 between North Road and Bear Springs Road	6,200	< 50	54	117	64.8
SR-189 between Bear Springs Road and Grass Valley Road	6,200	< 50	54	117	64.8
SR-189 between Grass Valley Road and Daley Canyon Road	9,200	< 50	71	152	66.5
SR-189 between Daley Canyon Road and North Bay Road	11,200	< 50	80	173	67.4
SR-189 east of North Bay Road	7,700	< 50	63	135	65.7

Source: LSA Associates, Inc., June 2008.

[1] Traffic noise within 50 ft of a roadway centerline requires site-specific analysis.

ADT = average daily traffic
CNEL = Community Noise Equivalent Level
dBA = A-weighted decibel
ft = feet
SR-18 = State Route 18
SR-173 = State Route 173
SR-189 = State Route 189

Table K: Future (2030) With Project Traffic Noise Levels

Roadway Segment	ADT	Center-line to 70 CNEL (ft)	Center-line to 65 CNEL (ft)	Center-line to 60 CNEL (ft)	CNEL (dBA) 50 ft from Outermost Lane	Increase from Existing Noise Level (dBA)	Project Related Increase (dBA)
Bear Springs Road north of SR-189	3,200	< 50[1]	< 50	75	61.9	2.7	0.0
Bear Springs Road between SR-189 and SR-18	1,600	< 50	< 50	< 50	58.9	3.6	0.9
Daley Canyon Road between SR-189 and Daley Canyon Access	12,500	< 50	86	186	67.9	3.4	0.5
Daley Canyon Road between Daley Canyon Access and SR-18	9,300	< 50	71	153	66.6	2.6	0.6
SR-173 north of SR-18	9,700	< 50	73	157	66.8	2.8	0.3
SR-18 west of Lake Gregory Drive	12,500	< 50	86	186	67.9	1.7	0.2
SR-18 between Lake Gregory Drive and Bear Springs Road	14,400	< 50	95	204	68.5	1.8	0.3
SR-18 between Bear Springs Road and Project Access	16,500	< 50	104	224	69.1	2.2	0.4
SR-18 between Project Access and Daley Canyon Road	16,500	< 50	104	224	69.1	2.2	0.4
SR-18 between Daley Canyon Road and Daley Canyon Access	8,100	< 50	65	139	66.0	1.6	0.5
SR-18 between Daley Canyon Access and SR-173	12,500	< 50	86	186	67.9	2.1	0.3
SR-18 east of SR-173	7,400	< 50	61	131	65.6	1.8	0.1
SR-189 between Lake Gregory Drive and North Road	4,400	< 50	< 50	93	63.3	1.4	0.0
SR-189 between North Road and Bear Springs Road	6,400	< 50	56	119	64.9	1.8	0.1
SR-189 between Bear Springs Road and Grass Valley Road	6,200	< 50	54	117	64.8	1.8	0.0
SR-189 between Grass Valley Road and Daley Canyon Road	9,700	< 50	73	157	66.8	2.8	0.3
SR-189 between Daley Canyon Road and North Bay Road	12,000	< 50	84	181	67.7	2.3	0.3
SR-189 east of North Bay Road	8,200	< 50	65	140	66.0	1.9	0.3

Source: LSA Associates, Inc., June 2008.

[1] Traffic noise within 50 ft of a roadway centerline requires site-specific analysis.

ADT = average daily traffic
CNEL = Community Noise Equivalent Level
dBA = A-weighted decibel
ft = feet
SR-18 = State Route 18
SR-173 = State Route 173
SR-189 = State Route 189

The proposed project includes two active outdoor use areas. The closest residences to the proposed southern play fields would be located at a distance of approximately 90 ft to the west.

Southern Play Field. As there are no grandstands for the southern play field, the majority of the noise will be generated by the activities on the field. Based on the average A-weighted sound level of speech for different vocal efforts under quiet conditions at a distance of 1 meter (m) (3 ft) in a free field (quoted by Harry Levitt and John C. Webster in *Handbook of Acoustical Measurements and Noise Control*, Third Edition, edited by Cyril M Harris, 1991), male shouting would result in 88 dBA, while female shouting is 82 dBA. Likewise, loud voice for male is 75 dBA and 71 dBA for female, and raised voice is 65 dBA for male and 62 dBA for female. These are all maximum sound pressure levels (L_{max}) measured at 1 m (3.28 ft) from the person. In acoustics, every doubling of an equal sound energy would result in a 3 dBA increase in combined noise level. Therefore, two males shouting at the same time would result in 91 dBA at 1 m (3 ft), and two females

shouting would result in 85 dBA. The distance from the center of the play fields to the residential property line to the west is approximately 240 ft. Assuming a total 60 people (the size of two teams, coaches, and several spectators) with an even mix of men and women and a combination of 10 minutes of shouting, 20 minutes of loud voices, and 30 minutes of raised voices, the noise would be approximately 50 dBA L_{eq} (1 hour) at 240 ft. Therefore, noise from the play fields will not exceed the noise standard of 57 dBA L_{eq} (1 hour) listed in Table I.

The maximum noise level from the play field activities would occur when there are multiple individuals yelling along the western edge of the play fields. Ten men yelling at one time along the western edge would generate a noise level of 98 dBA L_{max} at a distance of 1 m. At 90 ft, this noise level would be reduced to 62 dBA L_{max}. This noise level is below the noise standard of 75 dBA L_{max} listed in Table I. Therefore, the southern play field would not result in any long-term stationary noise impacts.

Northern Play Field. The edge of the northern play field is located at a distance of approximately 280–300 ft from the existing residences to the west. At this distance, assuming 10 people are yelling at once, the noise levels generated by the spectators would be reduced to 50 dBA L_{max}. The center of the play field is located at a distance of approximately 400 ft from the residences to the west. At this distance, the noise levels generated by 60 players/spectators would be reduced to 44 dBA L_{eq} (1 hour). The homes to the west of the play field are located at an elevation of 5,720 to 5,750 ft. The play field would be located in a cut section at an elevation of 5,620 ft. This 100–130 ft change in elevation, along with the edge of the cut section would reduce the play field noise by 7–8 dBA to 43 dBA L_{max} and 37 dBA L_{eq}. Therefore, the play field noise levels would be below the noise standards of 75 dBA L_{max} and 40 dBA L_{eq} listed in Table I.

None of the proposed play fields will be equipped with lighting. Therefore, no on-site outdoor activities would occur during nighttime (10:00 p.m.–7:00 a.m.) hours.

Miscellaneous Noise Sources. Other on-site activities, such as parking lots, basketball courts, a skateboard park, and volleyball courts would be located more than 700 ft from the nearest off-site sensitive residence to the west. Activities within these uses would potentially generate noise levels of up to 75 dBA L_{max} at a distance of 50 ft. Distance attenuation would reduce these noise levels to 46 dBA L_{max} or less. Activities within these on-site uses would not result in an exceedance of the stationary noise source standard of 75 dBA L_{max}.

Multiple Stationary Noise Source Impacts. Due to the topography in the project area it is unlikely that more than one noise source would be audible at any one receptor. However, the worst case on-site stationary noise impact would occur during Phase III, when all three play fields could be used at the same time. The worst-case combined noise levels would occur when there would be 60 players/spectators using each of the three fields. As they have direct line-of-sight to the southern playfields, the residences located approximately 450 ft from SR-18, midway between the north and south baseball fields, would be exposed to the highest noise levels. At this location, the existing homes are located at an elevation of approximately 5,690 ft. The northern play field is located in a cut section at an elevation of 5,620 ft. The elevation of the top of the cut slope between the homes and the play field ranges from 5,650 to 5,680 ft. This change in elevation would attenuate the play field noise levels by 7–8 dBA.

The combined noise levels at a residence midway between the north and south play fields are shown in Table L. These noise levels are below the exterior noise standards listed in Table I. Therefore, no mitigation measures would be required.

Table L: Combined Stationary Noise Source Impact (dBA)

	Noise Sources					Noise Threshold
	North Baseball Field	South Baseball Field	South Soccer Field	Misc. Noise Sources[1]	Combined Total[2]	
L_{max}	35.8	50.3	51.6	44.2	54.5	75
L_{eq}	32.4	46.0	44.5	36.2	48.7	50

Source: LSA Associates, Inc., September 2008.
1 Includes parking lots, basketball courts, skateboard park, and volleyball courts.
2 When measured at the closest existing residence to the west.
dBA = A-weighted decibel
L_{eq} = equivalent continuous noise level over a specified period of time (acoustical energy of a given measurement)
L_{max} = maximum instantaneous noise level

Amphitheater Noise – Church Services

The noise levels generated within the outdoor amphitheater during the regular services on Sunday mornings and Wednesday evenings would be 20 dBA lower than the noise levels generated by the concert events. Based on noise monitoring of an outdoor event that included amplified music (recorded music), a master of ceremony speaking over a loudspeaker, and individuals cheering, it is estimated that the church service events would generate 85 dBA L_{max} and 70 dBA L_{eq} at a distance of 50 feet. The residences to the west, at a distance of 900 ft, would be exposed to noise levels of up to 45 dBA L_{eq} and 60 dBA L_{max}. These noise levels are within 5 dBA of the 40 dBA L_{eq} and 75 dBA L_{max} exterior noise standards listed in Table I. Therefore, no mitigation measures would be required.

Aircraft Noise Impact

The proposed project site is located approximately 9 miles north of the Rialto Municipal Airport and 25 miles northeast of the Ontario International Airport. Due to the project's distance from the airports, no significant noise impact in terms of 24-hour averaged noise level, such as CNEL, are expected to affect the project site. Therefore, aircraft noise levels will be below a level of significance.

SIGNIFICANT IMPACTS AND MITIGATION MEASURES

Traffic Noise Impact on On-Site Land Uses

The closest on-site church structure to SR-18, the church retreat, would be located at a distance of approximately 145 ft from the roadway centerline. A sensitive exterior use, a garden, would also be located at this distance from SR-18. Due to distance attenuation, the traffic noise level at this location would be 63 dBA CNEL. This level is below the County's 65 dBA CNEL exterior noise standard. Therefore, no exterior mitigation measures are required.

Based on the *Protective Noise Levels: Condensed Version of EPA Levels* document (included in Appendix C), combinations of exterior walls, doors, and windows, all standard construction for Southern California buildings, would provide more than 24 dBA in exterior-to-interior noise reduction with windows closed and 12 dBA or more with windows open (national average is 25 dBA with windows closed and 15 dBA with windows open). With windows and doors closed, interior noise levels would be below the 45 dBA CNEL standard (i.e., 63 dBA - 24 dBA = 39 dBA). Therefore, building facade upgrades are not required. However, with windows or doors open, interior noise levels at this structure would exceed the 45 dBA CNEL standard (i.e., 63 dBA - 12 dBA = 51 dBA). Therefore, mechanical ventilation, such as air conditioning, will be required to ensure that the windows and doors can remain closed for prolonged periods of time.

Amphitheater Noise – Concert Events

A temporary outdoor amphitheater is to be constructed on the project site for use during Phases I and II of the proposed project. This amphitheater will be replaced by an indoor worship center in Phase III. The amphitheater would have a seating capacity of 600 and would be used primarily for Sunday morning services from 9:00 a.m. to 11:00 a.m. and on Wednesday evenings from 6:30 p.m. to 8:00 p.m. The amphitheater would also be used for up to three concerts per year. These concerts would be held on a Friday or Saturday evening from approximately 5:00 p.m. to 9:00 p.m., with an estimated attendance of between 200 and 500 people per concert.

Based on the noise monitoring results conducted for concerts during the 2002 Orange County Fair, the following lists the potential worst-case noise levels from future concerts at a distance of 50 ft from the stage/speakers:

- In areas in front of the stage/speakers, 94 dBA L_{eq} and 102 dBA L_{max}
- In areas on both sides of the stage/speakers, 90 dBA L_{eq} and 98 dBA L_{max}

- In areas on the back of the stage/speakers, 86 dBA L_{eq} and 94 dBA L_{max}

The proposed amphitheater would be directed toward the south and be located approximately 900 ft east of the existing homes. At this distance the existing homes, located to the side of the amphitheater, would be exposed to noise levels of up to 65 dBA L_{eq} and 73 dBA L_{max}. These noise levels would exceed the 40 dBA L_{eq} exterior noise standards listed in Table I by more than 5 dBA. Therefore, the proposed outdoor amphitheater would result in potentially significant long-term noise impacts.

As the existing homes to the west are elevated approximately 60–100 ft above the proposed amphitheater, it is not feasible to attenuate the concert noise levels with a berm or sound wall at the amphitheater. Constructing an 8 ft sound wall along the western property line would reduce the amphitheater noise by 9 dBA to 56 dBA L_{eq} and 64 dBA L_{max}. The L_{eq} noise level would continue to exceed the exterior noise standard listed in Table I by more than 5 dBA. Therefore, as the outdoor amphitheater would be used for three concert events per year and the desire is to maintain the rural mountain look of the area, it is not recommended that a sound barrier be constructed. The concert noise will be significant and unavoidable. Construction of Phase III will remove the temporary amphitheater and eliminate the noise impact.

Construction Activities

Short-term noise impacts would be associated with excavation, grading, and the erection of buildings on site during construction of the proposed project. Construction-related short-term noise levels would be higher than existing ambient noise levels in the project area at the present time, but would no longer occur once construction of the project is completed.

Two types of short-term noise impacts could occur during construction of the proposed project. First, construction crew commutes and the transport of construction equipment and materials to the site for the proposed project would incrementally increase noise levels on access roads leading to the site. A relatively high single-event noise exposure potential will exist at a maximum level of 87 dBA L_{max} with trucks passing at 50 ft. However, the projected construction traffic will be minimal when compared to the existing traffic volumes on SR-18 and other affected streets, and its associated long-term noise level change will not be perceptible. Therefore, short-term construction-related worker commutes and equipment transport noise impacts would not be substantial.

The second type of short-term noise impact is related to noise generated during excavation, grading, and construction on the project site. Construction is performed in discrete steps, each of which has its own mix of equipment, and consequently its own noise characteristics. These various sequential phases would change the character of the noise generated on site. Therefore, the noise levels vary as construction progresses. Despite the variety in the type and size of construction equipment, similarities in the dominant noise sources and patterns of operation allow construction-related noise ranges to be categorized by work phase. Table M lists maximum noise levels recommended for noise impact assessments for typical construction equipment based on a distance of 50 ft between the equipment and a noise receptor. Typical maximum noise levels range up to 91 dBA L_{max} at 50 ft during the noisiest construction phases. The site preparation phase, which includes excavation and grading of the site, tends to generate the highest noise levels, because the noisiest construction equipment is earthmoving equipment. Earthmoving equipment includes excavating machinery such as backfillers, bulldozers, draglines, and front loaders. Earthmoving and compacting equipment includes

Table M: Typical Maximum Construction Equipment Noise Levels (L_{max})

Type of Equipment	Range of Maximum Sound Levels Measured (dBA at 50 ft)	Suggested Maximum Sound Levels for Analysis (dBA at 50 ft)
Pile Drivers, 12,000 to 18,000 ft-lb/blow	81 – 96	93
Rock Drills	83 – 99	96
Jack hammers	75 – 85	82
Pneumatic Tools	78 – 88	85
Pumps	74 – 84	80
Dozers	77 – 90	85
Scrapers	83 – 91	87
Haul Trucks	83 – 94	88
Cranes	79 – 86	82
Portable Generators	71 – 87	80
Rollers	75 – 82	80
Tractors	77 – 82	80
Front-End Loaders	77 – 90	86
Hydraulic Backhoe	81 – 90	86
Hydraulic Excavators	81 – 90	86
Graders	79 – 89	86
Air Compressors	76 – 89	86
Trucks	81 – 87	86

Source: Noise Control for Buildings and Manufacturing Plants, Bolt, Beranek & Newman 1987.
dBA = A-weighted decibel
ft-lb/blow = foot-pound per blow
ft = feet
L_{max} = maximum instantaneous noise level

compactors, scrapers, and graders. Typical operating cycles for these types of construction equipment may involve one or two minutes of full power operation followed by three or four minutes at lower power settings.

Construction of the proposed project is expected to require the use of earthmovers, bulldozers, water trucks, and pickup trucks. This equipment would be used on the project site. Based on Table M, the maximum noise level generated by each earthmover on the proposed project site is assumed to be 88 dBA L_{max} at 50 ft from the earthmover. Each bulldozer would also generate 88 dBA L_{max} at 50 ft. The maximum noise level generated by water and pickup trucks is approximately 86 dBA L_{max} at 50 ft from these vehicles. Each doubling of a sound source with equal strength increases the noise level by 3 dBA. As each piece of construction equipment operates as an independent noise source, the combined noise level at each individual residence during this phase of construction would be 91 dBA L_{max} at a distance of 50 ft from the active construction area.

Phases I of the proposed project would include construction activities within the southwestern corner of the project site approximately 90 ft from the existing residences. Distance attenuation would reduce the construction noise by 5 dBA to 86 dBA L_{max}.

Phase II of the proposed project would include construction activities within 800 ft of the existing residences to the west. Distance attenuation would reduce the construction noise by 24 dBA to 67 dBA L_{max}.

Phase III of the proposed project would include construction activities within the northwestern corner of the project site, approximately 150 ft from the existing residences. Distance attenuation would reduce the construction noise by 10 dBA to 81 dBA L_{max}.

Maximum construction noise levels reaching the residence to the west would exceed the 75 dBA L_{max} exterior noise standards listed in Table I by more than 5 dBA during Phases I and III. Therefore, mitigation measures would be required.

MITIGATION MEASURES

Construction Noise

Construction will be limited to the hours of 7:00 a.m. to 7:00 p.m., Monday through Saturday, in accordance with County standards. No construction activities are permitted outside of these hours or on Sundays and federal holidays.

The following measures will be implemented to reduce potential construction noise impacts on nearby sensitive receptors.

1. During all site excavation and grading, the project contractors shall equip all construction equipment, fixed or mobile, with properly operating and maintained mufflers consistent with manufacturers' standards.
2. The project contractor shall place all stationary construction equipment so that emitted noise is directed away from sensitive receptors nearest the project site.
3. The construction contractor shall locate equipment staging in areas that will create the greatest distance between construction-related noise sources and noise-sensitive receptors nearest the project site during all project construction.
4. Heavy construction activities within 300 ft of the western property line shall be restricted to the hours of 10:00 a.m. to 4:00 p.m.

These mitigation measures are designed to limit the exposure of the sensitive land uses in the project area to the construction activities. However, the measures would not reduce the peak construction noise levels. Therefore, the impact would remain significant and unavoidable.

Traffic Noise Impacts on On-Site Land Uses

The church retreat shall be equipped with mechanical ventilation to ensure that the windows and doors can remain closed for prolonged periods of time to meet the 45 dBA CNEL interior noise standard.

On-Site Amphitheater Noise

The project applicant shall notify, in writing, the homeowners located within 0.25 mile of the proposed project site prior to any outdoor concert event. This notification shall be made no less than 72 hours prior to the event. However, noise levels from the concert events would remain significant and unavoidable.

Level of Significance after Mitigation

No significant noise impacts from long-term traffic will result after implementation of the mitigation measures listed above. Although temporary, the short-term noise levels that would be generated during construction of the proposed project would result in significant unavoidable impacts to the existing residential land uses to the west of the proposed project site. Noise levels generated during concert events will exceed the County's exterior noise standards during Phases I and II of the proposed project. However, Phase III of the proposed project will remove the temporary outdoor amphitheater and eliminate the noise impact.

CUMULATIVE IMPACTS

Construction and on-site operations are stationary sources of noise and would not contribute to off-site cumulative noise impacts from other planned and future projects. Project-related traffic would contribute to cumulative traffic noise impacts in the vicinity of the project site. As shown in Table K, sound levels would increase by more than 3 dBA from their corresponding existing levels along Bear Springs Road between SR-189 and SR-18 and along Daley Canyon Road between SR-189 and Daley Canyon Access. However, in 2030 the traffic noise level along Bear Springs Road between SR-189 and SR-18 would remain below the County's 60 dBA CNEL exterior noise threshold. In addition, there are currently no sensitive land uses along Daley Canyon Road between SR-189 and Daley Canyon Access that would be exposed to traffic noise levels in excess of the County's 60 dBA CNEL exterior noise threshold. Therefore, this would be considered an insignificant impact.

Noise levels generated during concert events will exceed the County's exterior noise standards and result in a cumulative noise impact during Phases I and II of the proposed project.

REFERENCES

Bolt, Beranek & Newman, 1987, Noise Control for Buildings and Manufacturing Plants.

San Bernardino County Code.

County of San Bernardino, 1989, Noise Element of the General Plan.

Federal Highway Administration. 1977. Highway Traffic Noise Prediction Model, FHWA RD-77-108.

LSA Associates, Inc. Traffic Report, June 2008.

United States Environmental Protection Agency. 1978. Protective Noise Levels: Condensed Version of EPA Levels Document.

APPENDIX A

COUNTY OF SAN BERNARDINO NOISE REGULATIONS

VII. NOISE ELEMENT

Noise has long been accepted as a byproduct of urbanization and is considered a potential environmental hazard. Excessive and/or sustained noise can contribute to both temporary and permanent hearing loss, and may be associated with increased fatigue, stress, annoyance, anxiety, and other psychological reactions in humans. For the various elements of the society to coexist, noise levels need to be controlled and minimized to limit exposure to residential communities and noise-sensitive land uses. The control of noise, therefore, is an essential component in creating a safe, compatible, and productive environment.

A. PURPOSE OF THE NOISE ELEMENT

The purpose of the Noise Element is to limit the exposure of the community to excessive noise levels. Local governments must "analyze and quantify" noise levels and the extent of noise exposure through actual measurement or the use of noise modeling. Technical data relating to mobile and point sources must be collected and synthesized into a set of noise control policies and programs that "minimizes the exposure of community residents to excessive noise." Noise-level contours must be mapped, and the conclusions of the element used as a basis for land use decisions. The Noise Element must be used to guide decisions concerning land use and the location of new roads and transit facilities because these are common sources of excessive noise levels. The Noise Background Report provides much of these technical data, and includes generalized estimates of distances to noise contours for typical traffic volumes on County roadways.

The most common sources of environmental noise in San Bernardino County are associated with roads, airports, railroad operations, and industrial activities. The facilities are used to transport residents, consumer products and provide basic infrastructure for the community by creating jobs and economic stability. In many areas of the County, noise-sensitive land uses such as residences, schools, churches and parks exist in proximity to these major noise sources.

1. RELATIONSHIP TO OTHER ELEMENTS OF THE GENERAL PLAN

The Noise Element is closely related to the Circulation and Land Use Elements. Transit thoroughfares, such as freeways, arterial highways, and railways, generate the majority of noise within the County and influence the type and intensity of development within a given area. Likewise, land uses sensitive to noise are to be considered when determining land use patterns and planned mitigation measures related to noise impacts. The location and amount of such noise generators and receptors are also important considerations in the Open Space Element, which addresses such issues as public parks and open space buffers.

2. INPUT FROM PUBLIC PARTICIPATION PROGRAM

As part of the County's General Plan Update process, community meetings were held at several locations within the County to gather informative data and input from residents. Questions were posed to the attendees regarding the growth and development in their community, to inquire about their concerns and about what could be done to address their concerns. Noise was mentioned in several of the community meetings as being an issue of concern. Additionally, concern was expressed by citizens and staff regarding the efficacy of the noise complaint process and enforcement of noise regulations.

3. SUMMARY OF EXISTING CONDITIONS

The Noise Background Report describes the existing noise environment in the subareas of San Bernardino County. It also reviews the roles of the state and federal governments in regulating noise from specific sources. The County regulates noise from sources that are not pre-empted by state or federal jurisdiction. Such sources include project construction activities; stationary sources, such as fans, pumps, compressors or other mechanical equipment; or mobile sources operating on private property. Section 83.01.080 of the County's Development Code sets forth performance standards for affected (receiving) land uses from stationary and mobile sources, during daytime (7 AM to 10 PM) and nighttime (10 PM to 7 AM) periods. Exemptions from these standards include motor vehicles not under the control of the industrial use, emergency equipment, vehicles and devices, and temporary construction and repair or demolition activities taking place between the hours of 7 AM and 7 PM Monday through Saturday, excluding federal holidays.

4. SOURCES OF NOISE IN SAN BERNARDINO COUNTY

The County has promulgated and implemented noise policies and requirements for land development and construction projects by requiring these projects to provide specific noise analyses and implement any necessary measures to reduce noise to an acceptable level.

Circulation and transportation systems (roadways, airports and railroads) are the most significant noise-producing activities within the County, and subject some areas to unacceptable levels. Point sources, such as industrial, mining and recreational sites, also produce noise levels of concern. Some key problem areas are wrecking yards, rock crushing, racetracks, snow and water ski areas, outdoor concerts, shooting facilities, and similar recreation facilities. Additional problems are off-road vehicles, snowmobiles, and the operation of specialized equipment.

Traffic Noise: The level of noise associated with roadways will vary with total traffic volume, vehicular speed, the relative numbers of trucks and cars in the traffic volumes, the roadway cross-section and geometric design, and the local topography. Typically, the greater the vehicle speed and truck percentage, the greater the level of noise emission from the transportation facility. Refer to the Noise Background Report for more information on traffic noise in San Bernardino County.

Rail Noise: Railroad activity, including heavy rail locomotives and railcars, also constitutes a major but less widespread element of the noise environment in the County. The passage of trains results in considerable noise impacts on adjacent lands, although the elevated noise levels are periodic and of relatively short duration. Railroad tracks within the County are used for passenger transportation and delivery of freight. Refer to the Noise Background Report for more information on rail noise in San Bernardino County.

Aircraft Noise: Aircraft noise generates occasional, but intrusive noise levels for the occupants of property adjacent to airports and/or under the flight patterns of aircraft using airports. The federal and state governments regulate aircraft noise. Refer to the Noise Background Report for more information on aircraft noise in San Bernardino County.

Industrial Noise: Industrial noise sources exist but do not materially affect noise-sensitive land uses within the unincorporated areas of the County. Refer to the Noise Background Report for more information on industrial noise in San Bernardino County.

5. CONCLUSION

The unincorporated portions of the County represent the full range of community noise environments from very quiet rural to moderately noisy suburban to noisy urban. Noise patterns in the County are generally consistent with published data regarding the intensity of development/type of land use and the expected levels of environmental noise.

B. COUNTYWIDE GOALS AND POLICIES OF THE NOISE ELEMENT

GOAL N 1.	**The County will abate and avoid excessive noise exposures through noise mitigation measures incorporated into the design of new noise-generating and new noise-sensitive land uses, while protecting areas within the County where the present noise environment is within acceptable limits.**

POLICIES

N 1.1 Designate areas within San Bernardino County as "noise impacted" if exposed to existing or projected future exterior noise levels from mobile or stationary sources exceeding the standards listed in Chapter 83.01 of the Development Code.

N 1.2 Ensure that new development of residential or other noise-sensitive land uses is not permitted in noise-impacted areas unless effective mitigation measures are incorporated into the project design to reduce noise levels to the standards of Noise-sensitive land uses include residential uses, schools, hospitals, nursing homes, places of worship and libraries.

N 1.3 When industrial, commercial, or other land uses, including locally regulated noise sources, are proposed for areas containing noise-sensitive land uses, noise levels generated by the proposed use will not exceed the performance standards of Table N-2 within outdoor activity areas. If outdoor activity areas have not yet been determined, noise levels shall not exceed the performance standards listed in Chapter 83.01 of the Development Code at the boundary of areas planned or zoned for residential or other noise-sensitive land uses.

Programs

1. Require an acoustical analysis prior to approval of proposed development of new residential or other noise-sensitive land uses in a noise-impacted area or a new noise generating use in an area that could affect existing noise-sensitive land uses. The appropriate time for requiring an acoustical analysis is during the environmental review process so that noise mitigation may be an integral part of the project design. The acoustical analysis shall:

    a. Be the responsibility of the applicant.

    b. Be prepared by a qualified person experienced in the fields of environmental noise assessment and architectural acoustics.

    c. Include representative noise level measurements with sufficient sampling periods and locations to adequately describe local conditions;

    d. Include estimated noise levels in terms of the descriptors shown in Figures II-8 and II-9 of the Noise Background Report for existing and projected future (20 years hence) conditions, with a comparison made to the adopted policies of the Noise Element.

    e. Include recommendations for appropriate mitigation to achieve compliance with the adopted policies and standards of the Noise Element. Where the noise source in question consists of intermittent single events, the report must address the effects of maximum noise levels in sleeping rooms in terms of possible sleep disturbance.

    f. Include estimates of noise exposure after the prescribed mitigation measures have been implemented. If compliance with the adopted standards and policies of the Noise Element will not be achieved, acoustical information to support a statement of overriding considerations for the project must be provided.

2. Develop and employ procedures to ensure that requirements imposed pursuant to the finding of an acoustical analysis are implemented as part of the project review and building permit processes.

N 1.4 Enforce the state noise insulation standards (California Administrative Code, Title 24) and Chapter 35 of the California Building Code (CBC)6.

N 1.5 Limit truck traffic in residential and commercial areas to designated truck routes; limit construction, delivery, and through-truck traffic to designated routes; and distribute maps of approved truck routes to County traffic officers.

N 1.6 Enforce the hourly noise-level performance standards for stationary and other locally regulated sources, such as industrial, recreational, and construction activities as well as mechanical and electrical equipment.

Programs

1. Develop and implement a noise ordinance that will:

    a. Be consistent with this element of the General Plan.

    b. Include the development standards provided in this element in the Development Code.

N 1.7 Prevent incompatible land uses, by reason of excessive noise levels, from occurring in the future.

Programs

1. Examine the existing and projected future noise environment when considering amendments to the circulation system.

2. Periodically review and update the Noise Element to ensure that noise exposure information and specific policies are consistent with changing conditions within the County and with noise control regulations enacted after the adoption of this element.

---

[6] Title 24 requires that an acoustical analysis be prepared for all new developments of multi-family dwellings, condominiums, hotels, and motels proposed for areas within the 60 dB Ldn (or CNEL) contour of a major noise source for the purpose of documenting that an acceptable interior noise level of 45 dB Ldn (or CNEL) or below will be achieved with the windows and doors closed. UBC Chapter 35 requires that common wall and floor/ceiling assemblies within multi-family dwellings comply with minimum standards for the transmission of airborne sound and structure-borne impact noise.

3. Provide sufficient noise exposure information so that existing and potential noise impacts will be identified and addressed in the project review processes.

4. Compile and publish a list of standardized noise mitigation measures.

GOAL N 2.	**The County will strive to preserve and maintain the quiet environment of mountain, desert and other rural areas.**

POLICIES

N 2.1 The County will require appropriate and feasible on-site noise attenuating measures that may include noise walls, enclosure of noise-generating equipment, site planning to locate noise sources away from sensitive receptors, and other comparable features.

N 2.2 The County will continue to work aggressively with federal agencies, including the branches of the military, the U.S. Forest Service, BLM, and other agencies to identify and work cooperatively to reduce potential conflicts arising from noise generated on federal lands and facilities affecting nearby land uses in unincorporated County areas.

C. VALLEY REGION GOALS AND POLICIES OF THE NOISE ELEMENT

NONE SPECIFIC TO THE VALLEY REGION.

D. MOUNTAIN REGION GOALS AND POLICIES OF THE NOISE ELEMENT

GOAL M/N 1.	**The County will strive to preserve and maintain the quiet environment of the Mountain Region.**

POLICIES

M/N 1.1 Encourage and support strict enforcement of vehicle code regulations to reduce vehicular noise in the mountain communities.

M/N 1.2 Encourage responsible agencies to post signs near forest access roads which explain the acceptable vehicular noise levels for vehicles using those roads.

E. DESERT REGION GOALS AND POLICIES OF THE NOISE ELEMENT

NONE SPECIFIC TO THE DESERT REGION.

83.01.080 Noise

This Section establishes standards concerning acceptable noise levels for both noise-sensitive land uses and for noise-generating land uses.

(a) Noise measurement. Noise shall be measured:

(1) At the property line of the nearest site that is occupied by, and/or zoned or designated to allow the development of noise-sensitive land uses;

(2) With a sound level meter that meets the standards of the American National Standards Institute (ANSI Section SI4 1979, Type 1 or Type 2);

(3) Using the "A" weighted sound pressure level scale in decibels (ref. pressure = 20 micronewtons per meter squared). The unit of measure shall be designated as dB(A).

(b) Noise impacted areas. Areas within the County shall be designated as "noise-impacted" if exposed to existing or projected future exterior noise levels from mobile or stationary sources exceeding the standards listed in Subsection (d) (Noise standards for stationary noise sources) and Subsection (e) (Noise standards for adjacent mobile noise sources), below. New development of residential or other noise-sensitive land uses shall not be allowed in noise-impacted areas unless effective mitigation measures are incorporated into the project design to reduce noise levels to these standards. Noise-sensitive land uses shall include residential uses, schools, hospitals, nursing homes, religious institutions, libraries, and similar uses.

(c) Noise standards for stationary noise sources.

(1) Noise standards. Table 83-2 (Noise Standards for Stationary Noise Sources) describes the noise standard for emanations from a stationary noise source, as it affects adjacent properties:

Table 83-2 Noise Standards for Stationary Noise Sources		
Affected Land Uses (Receiving Noise)	7 am-10 pm Leq	10 pm-7 am Leq
Residential	55 dB(A)	45 dB(A)
Professional Services	55 dB(A)	55 dB(A)
Other Commercial	60 dB(A)	60 dB(A)
Industrial	70 dB(A)	70 dB(A)

Leq = (Equivalent Energy Level). The sound level corresponding to a steady-state sound level containing the same total energy as a time-varying signal over a given sample period, typically 1, 8 or 24 hours.
dB(A) = (A-weighted Sound Pressure Level). The sound pressure level, in decibels, as measured on a sound level meter using the A-weighting filter network. The A-weighting filter de-emphasizes the very low and very high frequency components of the sound, placing greater emphasis on those frequencies within the sensitivity range of the human ear.
Ldn = (Day-Night Noise Level). The average equivalent A-weighted sound level during a 24-hour day obtained by adding 10 decibels to the hourly noise levels measured during the night (from 10 pm to 7 am). In this way Ldn takes into account the lower tolerance of people for noise during nighttime periods.

(2) Noise limit categories. No person shall operate or cause to be operated a source of sound at a location or allow the creation of noise on property owned, leased, occupied, or otherwise controlled by the person, which causes the noise level, when measured on another property, either incorporated or unincorporated, to exceed any one of the following:

(A) The noise standard for the receiving land use as specified in Subsection B (Noise-impacted areas), above, for a cumulative period of more than 30 minutes in any hour.

(B) The noise standard plus 5 dB(A) for a cumulative period of more than 15 minutes in any hour.

(C) The noise standard plus 10 dB(A) for a cumulative period of more than five minutes in any hour.

(D) The noise standard plus 15 dB(A) for a cumulative period of more than one minute in any hour.

(E) The noise standard plus 20 dB(A) for any period of time.

(d) Noise standards for adjacent mobile noise sources. Noise from mobile sources may affect adjacent properties adversely. When it does, the noise shall be mitigated for any new development to a level that shall not exceed the standards described in the following Table 83-3 (Noise Standards for Adjacent Mobile Noise Sources).

Table 83-3
Noise Standards for Adjacent Mobile Noise Sources

Land Use		Ldn (or CNEL) dB(A)	
Categories	Uses	Interior [1]	Exterior [2]
Residential	Single and multi-family, duplex, mobile homes	45	60 [3]
Commercial	Hotel, motel, transient housing	45	60 [3]
	Commercial retail, bank, restaurant	50	N/A
	Office building, research and development, professional offices	45	65
	Amphitheater, concert hall, auditorium, movie theater	45	N/A
Institutional/Public	Hospital, nursing home, school classroom, religious institution, library	45	65
Open Space	Park	N/A	65

Notes:

(1) The indoor environment shall exclude bathrooms, kitchens, toilets, closets and corridors.

(2) The outdoor environment shall be limited to:

- Hospital/office building patios
- Hotel and motel recreation areas
- Mobile home parks
- Multi-family private patios or balconies
- Park picnic areas
- Private yard of single-family dwellings
- School playgrounds

(3) An exterior noise level of up to 65 dB(A) (or CNEL) shall be allowed provided exterior noise levels have been substantially mitigated through a reasonable application of the best available noise reduction technology, and interior noise exposure does not exceed 45 dB(A) (or CNEL) with windows and doors closed. Requiring that windows and doors remain closed to achieve an acceptable interior noise level shall necessitate the use of air conditioning or mechanical ventilation.

CNEL = (Community Noise Equivalent Level). The average equivalent A-weighted sound level during a 24-hour day, obtained after addition of approximately five decibels to sound levels in the evening from 7 p.m. to 10 a.m. and 10 decibels to sound levels in the night before 7 a.m. and after 10 p.m.

(e) Increases in allowable noise levels. If the measured ambient level exceeds any of the first four noise limit categories in Subsection (d)(2), above, the allowable noise exposure standard shall be increased to reflect the ambient noise level. If the ambient noise level exceeds the fifth noise limit category in Subsection (d)(2), above, the maximum allowable noise level under this category shall be increased to reflect the maximum ambient noise level.

(f) Reductions in allowable noise levels. If the alleged offense consists entirely of impact noise or simple tone noise, each of the noise levels in Table 83-2 (Noise Standards for Stationary Noise Sources) shall be reduced by 5 dB(A).

(g) Exempt noise. The following sources of noise shall be exempt from the regulations of this Section:

(1) Motor vehicles not under the control of the commercial or industrial use.

(2) Emergency equipment, vehicles, and devices.

(3) Temporary construction, maintenance, repair, or demolition activities between 7:00 a.m. and 7:00 p.m., except Sundays and Federal holidays.

(h) Noise standards for other structures. All other structures shall be sound attenuated against the combined input of all present and projected exterior noise to not exceed the criteria.

Table 83-4
Noise Standards for Other Structures

Typical Uses	12-Hour Equivalent Sound Level (Interior) in dBA Ldn
Educational, institutions, libraries, meeting facilities, etc.	45
General office, reception, etc.	50
Retail stores, restaurants, etc.	55
Other areas for manufacturing, assembly, testing, warehousing, etc.	65

In addition, the average of the maximum levels on the loudest of intrusive sounds occurring during a 24-hour period shall not exceed 65 dBA interior.

Adopted Ordinance 4011 (2007)

83.01.090 Vibration

(a) Vibration standard. No ground vibration shall be allowed that can be felt without the aid of instruments at or beyond the lot line, nor shall any vibration be allowed which produces a particle velocity greater than or equal to two-tenths (0.2) inches per second measured at or beyond the lot line.

(b) Vibration measurement. Vibration velocity shall be measured with a seismograph or other instrument capable of measuring and recording displacement and frequency, particle velocity, or acceleration. Readings shall be made at points of maximum vibration along any lot line next to a parcel within a residential, commercial and industrial land use zoning district.

(c) Exempt vibrations. The following sources of vibration shall be exempt from the regulations of this Section.

(1) Motor vehicles not under the control of the subject use.

APPENDIX B

FHWA TRAFFIC NOISE MODEL PRINTOUTS

TABLE Existing-01
FHWA ROADWAY NOISE LEVEL ANALYSIS

RUN DATE: 01/31/2008
ROADWAY SEGMENT: Bear Springs Rd. north of SR-189
NOTES: Church of the Woods - Existing

---

* * ASSUMPTIONS * *

AVERAGE DAILY TRAFFIC: 1700 SPEED (MPH): 45 GRADE: .5

TRAFFIC DISTRIBUTION PERCENTAGES

	DAY	EVENING	NIGHT
AUTOS	75.51	12.57	9.34
M-TRUCKS	1.56	0.09	0.19
H-TRUCKS	0.64	0.02	0.08

ACTIVE HALF-WIDTH (FT): 6 SITE CHARACTERISTICS: SOFT

---

* * CALCULATED NOISE LEVELS * *

CNEL AT 50 FT FROM NEAR TRAVEL LANE CENTERLINE (dB) = 59.19

DISTANCE (FEET) FROM ROADWAY CENTERLINE TO CNEL

70 CNEL	65 CNEL	60 CNEL	55 CNEL
0.0	0.0	0.0	106.1

TABLE Existing-02
FHWA ROADWAY NOISE LEVEL ANALYSIS

RUN DATE: 01/31/2008
ROADWAY SEGMENT: Bear Springs Rd. between SR-189 and SR-18
NOTES: Church of the Woods - Existing

---

* * ASSUMPTIONS * *

AVERAGE DAILY TRAFFIC: 700 SPEED (MPH): 45 GRADE: .5

TRAFFIC DISTRIBUTION PERCENTAGES

	DAY	EVENING	NIGHT
AUTOS	75.51	12.57	9.34
M-TRUCKS	1.56	0.09	0.19
H-TRUCKS	0.64	0.02	0.08

ACTIVE HALF-WIDTH (FT): 6 SITE CHARACTERISTICS: SOFT

---

* * CALCULATED NOISE LEVELS * *

CNEL AT 50 FT FROM NEAR TRAVEL LANE CENTERLINE (dB) = 55.34

DISTANCE (FEET) FROM ROADWAY CENTERLINE TO CNEL

70 CNEL	65 CNEL	60 CNEL	55 CNEL
0.0	0.0	0.0	58.9

TABLE Existing-03
FHWA ROADWAY NOISE LEVEL ANALYSIS

:UN DATE: 01/31/2008
:OADWAY SEGMENT: Daley Canyon Rd. between SR-189 and Daley Canyon Access
IOTES: Church of the Woods - Existing

---

* * ASSUMPTIONS * *

.VERAGE DAILY TRAFFIC: 5800 SPEED (MPH): 45 GRADE: .5

TRAFFIC DISTRIBUTION PERCENTAGES

	DAY	EVENING	NIGHT
.UTOS	75.51	12.57	9.34
I-TRUCKS	1.56	0.09	0.19
I-TRUCKS	0.64	0.02	0.08

.CTIVE HALF-WIDTH (FT): 6 SITE CHARACTERISTICS: SOFT

---

* * CALCULATED NOISE LEVELS * *

'NEL AT 50 FT FROM NEAR TRAVEL LANE CENTERLINE (dB) = 64.52

DISTANCE (FEET) FROM ROADWAY CENTERLINE TO CNEL

70 CNEL	65 CNEL	60 CNEL	55 CNEL
0.0	52.0	111.5	239.9

TABLE Existing-04
FHWA ROADWAY NOISE LEVEL ANALYSIS

:UN DATE: 01/31/2008
:OADWAY SEGMENT: Daley Canyon Rd. between Daley Canyon Access and SR-18
IOTES: Church of the Woods - Existing

---

* * ASSUMPTIONS * *

.VERAGE DAILY TRAFFIC: 5100 SPEED (MPH): 45 GRADE: .5

TRAFFIC DISTRIBUTION PERCENTAGES

	DAY	EVENING	NIGHT
.UTOS	75.51	12.57	9.34
I-TRUCKS	1.56	0.09	0.19
I-TRUCKS	0.64	0.02	0.08

.CTIVE HALF-WIDTH (FT): 6 SITE CHARACTERISTICS: SOFT

---

* * CALCULATED NOISE LEVELS * *

:NEL AT 50 FT FROM NEAR TRAVEL LANE CENTERLINE (dB) = 63.96

DISTANCE (FEET) FROM ROADWAY CENTERLINE TO CNEL

70 CNEL	65 CNEL	60 CNEL	55 CNEL
0.0	0.0	102.4	220.3

TABLE Existing-05
FHWA ROADWAY NOISE LEVEL ANALYSIS

RUN DATE: 01/31/2008
ROADWAY SEGMENT: SR-173 north of SR-18
NOTES: Church of the Woods - Existing

---

* * ASSUMPTIONS * *

AVERAGE DAILY TRAFFIC: 5200 SPEED (MPH): 45 GRADE: .5

TRAFFIC DISTRIBUTION PERCENTAGES

	DAY	EVENING	NIGHT
AUTOS	75.51	12.57	9.34
M-TRUCKS	1.56	0.09	0.19
H-TRUCKS	0.64	0.02	0.08

ACTIVE HALF-WIDTH (FT): 6 SITE CHARACTERISTICS: SOFT

---

* * CALCULATED NOISE LEVELS * *

CNEL AT 50 FT FROM NEAR TRAVEL LANE CENTERLINE (dB) = 64.04

DISTANCE (FEET) FROM ROADWAY CENTERLINE TO CNEL

70 CNEL	65 CNEL	60 CNEL	55 CNEL
0.0	0.0	103.7	223.1

TABLE Existing-06
FHWA ROADWAY NOISE LEVEL ANALYSIS

RUN DATE: 01/31/2008
ROADWAY SEGMENT: SR-18 west of Lake Gregory Dr.
NOTES: Church of the Woods - Existing

---

* * ASSUMPTIONS * *

AVERAGE DAILY TRAFFIC: 8600 SPEED (MPH): 45 GRADE: .5

TRAFFIC DISTRIBUTION PERCENTAGES

	DAY	EVENING	NIGHT
AUTOS	75.51	12.57	9.34
M-TRUCKS	1.56	0.09	0.19
H-TRUCKS	0.64	0.02	0.08

ACTIVE HALF-WIDTH (FT): 6 SITE CHARACTERISTICS: SOFT

---

* * CALCULATED NOISE LEVELS * *

CNEL AT 50 FT FROM NEAR TRAVEL LANE CENTERLINE (dB) = 66.23

DISTANCE (FEET) FROM ROADWAY CENTERLINE TO CNEL

70 CNEL	65 CNEL	60 CNEL	55 CNEL
0.0	67.5	144.9	311.9

TABLE Existing-07
FHWA ROADWAY NOISE LEVEL ANALYSIS

RUN DATE: 01/31/2008
ROADWAY SEGMENT: SR-18 between Lake Gregory Dr. and Bear Springs Rd.
NOTES: Church of the Woods - Existing

---

* * ASSUMPTIONS * *

AVERAGE DAILY TRAFFIC: 9500 SPEED (MPH): 45 GRADE: .5

TRAFFIC DISTRIBUTION PERCENTAGES

	DAY	EVENING	NIGHT
AUTOS	75.51	12.57	9.34
M-TRUCKS	1.56	0.09	0.19
H-TRUCKS	0.64	0.02	0.08

ACTIVE HALF-WIDTH (FT): 6 SITE CHARACTERISTICS: SOFT

---

* * CALCULATED NOISE LEVELS * *

CNEL AT 50 FT FROM NEAR TRAVEL LANE CENTERLINE (dB) = 66.66

DISTANCE (FEET) FROM ROADWAY CENTERLINE TO CNEL

70 CNEL	65 CNEL	60 CNEL	55 CNEL
0.0	72.1	154.8	333.3

TABLE Existing-08
FHWA ROADWAY NOISE LEVEL ANALYSIS

RUN DATE: 01/31/2008
ROADWAY SEGMENT: SR-18 between Bear Springs Rd. and Project Access
NOTES: Church of the Woods - Existing

---

* * ASSUMPTIONS * *

AVERAGE DAILY TRAFFIC: 10100 SPEED (MPH): 45 GRADE: .5

TRAFFIC DISTRIBUTION PERCENTAGES

	DAY	EVENING	NIGHT
AUTOS	75.51	12.57	9.34
M-TRUCKS	1.56	0.09	0.19
H-TRUCKS	0.64	0.02	0.08

ACTIVE HALF-WIDTH (FT): 6 SITE CHARACTERISTICS: SOFT

---

* * CALCULATED NOISE LEVELS * *

CNEL AT 50 FT FROM NEAR TRAVEL LANE CENTERLINE (dB) = 66.93

DISTANCE (FEET) FROM ROADWAY CENTERLINE TO CNEL

70 CNEL	65 CNEL	60 CNEL	55 CNEL
0.0	75.1	161.3	347.2

TABLE Existing-09
FHWA ROADWAY NOISE LEVEL ANALYSIS

RUN DATE: 01/31/2008
ROADWAY SEGMENT: SR-18 between Project Acess and Daley Canyon Rd.
NOTES: Church of the Woods - Existing

---

* * ASSUMPTIONS * *

AVERAGE DAILY TRAFFIC: 10100 SPEED (MPH): 45 GRADE: .5

TRAFFIC DISTRIBUTION PERCENTAGES

	DAY	EVENING	NIGHT
AUTOS	75.51	12.57	9.34
M-TRUCKS	1.56	0.09	0.19
H-TRUCKS	0.64	0.02	0.08

ACTIVE HALF-WIDTH (FT): 6 SITE CHARACTERISTICS: SOFT

---

* * CALCULATED NOISE LEVELS * *

CNEL AT 50 FT FROM NEAR TRAVEL LANE CENTERLINE (dB) = 66.93

DISTANCE (FEET) FROM ROADWAY CENTERLINE TO CNEL

70 CNEL	65 CNEL	60 CNEL	55 CNEL
0.0	75.1	161.3	347.2

TABLE Existing-10
FHWA ROADWAY NOISE LEVEL ANALYSIS

RUN DATE: 01/31/2008
ROADWAY SEGMENT: SR-18 between Daley Canyon Rd. and Daley Canyon Access
NOTES: Church of the Woods - Existing

---

* * ASSUMPTIONS * *

AVERAGE DAILY TRAFFIC: 5600 SPEED (MPH): 45 GRADE: .5

TRAFFIC DISTRIBUTION PERCENTAGES

	DAY	EVENING	NIGHT
AUTOS	75.51	12.57	9.34
M-TRUCKS	1.56	0.09	0.19
H-TRUCKS	0.64	0.02	0.08

ACTIVE HALF-WIDTH (FT): 6 SITE CHARACTERISTICS: SOFT

---

* * CALCULATED NOISE LEVELS * *

CNEL AT 50 FT FROM NEAR TRAVEL LANE CENTERLINE (dB) = 64.37

DISTANCE (FEET) FROM ROADWAY CENTERLINE TO CNEL

70 CNEL	65 CNEL	60 CNEL	55 CNEL
0.0	50.9	108.9	234.4

TABLE Existing-11
FHWA ROADWAY NOISE LEVEL ANALYSIS

:UN DATE: 01/31/2008
:OADWAY SEGMENT: SR-18 between Daley Canyon Access and SR-173
IOTES: Church of the Woods - Existing

---

* * ASSUMPTIONS * *

.VERAGE DAILY TRAFFIC: 7800 SPEED (MPH): 45 GRADE: .5

TRAFFIC DISTRIBUTION PERCENTAGES

	DAY	EVENING	NIGHT
.UTOS	75.51	12.57	9.34
[-TRUCKS	1.56	0.09	0.19
[-TRUCKS	0.64	0.02	0.08

.CTIVE HALF-WIDTH (FT): 6 SITE CHARACTERISTICS: SOFT

---

* * CALCULATED NOISE LEVELS * *

:NEL AT 50 FT FROM NEAR TRAVEL LANE CENTERLINE (dB) = 65.81

DISTANCE (FEET) FROM ROADWAY CENTERLINE TO CNEL

70 CNEL	65 CNEL	60 CNEL	55 CNEL
0.0	63.3	135.8	292.3

TABLE Existing-12
FHWA ROADWAY NOISE LEVEL ANALYSIS

:UN DATE: 01/31/2008
:OADWAY SEGMENT: SR-18 east of SR-173
IOTES: Church of the Woods - Existing

---

* * ASSUMPTIONS * *

.VERAGE DAILY TRAFFIC: 4900 SPEED (MPH): 45 GRADE: .5

TRAFFIC DISTRIBUTION PERCENTAGES

	DAY	EVENING	NIGHT
.UTOS	75.51	12.57	9.34
I-TRUCKS	1.56	0.09	0.19
:-TRUCKS	0.64	0.02	0.08

.CTIVE HALF-WIDTH (FT): 6 SITE CHARACTERISTICS: SOFT

---

* * CALCULATED NOISE LEVELS * *

NEL AT 50 FT FROM NEAR TRAVEL LANE CENTERLINE (dB) = 63.79

DISTANCE (FEET) FROM ROADWAY CENTERLINE TO CNEL

70 CNEL	65 CNEL	60 CNEL	55 CNEL
0.0	0.0	99.7	214.5

TABLE Existing-13
FHWA ROADWAY NOISE LEVEL ANALYSIS

RUN DATE: 01/31/2008
ROADWAY SEGMENT: SR-189 between Lake Gregory Dr. and North Rd.
NOTES: Church of the Woods - Existing

---

* * ASSUMPTIONS * *

AVERAGE DAILY TRAFFIC: 3200 SPEED (MPH): 45 GRADE: .5

TRAFFIC DISTRIBUTION PERCENTAGES

	DAY	EVENING	NIGHT
AUTOS	75.51	12.57	9.34
M-TRUCKS	1.56	0.09	0.19
H-TRUCKS	0.64	0.02	0.08

ACTIVE HALF-WIDTH (FT): 6 SITE CHARACTERISTICS: SOFT

---

* * CALCULATED NOISE LEVELS * *

CNEL AT 50 FT FROM NEAR TRAVEL LANE CENTERLINE (dB) = 61.94

DISTANCE (FEET) FROM ROADWAY CENTERLINE TO CNEL

70 CNEL	65 CNEL	60 CNEL	55 CNEL
0.0	0.0	75.2	161.5

TABLE Existing-14
FHWA ROADWAY NOISE LEVEL ANALYSIS

RUN DATE: 01/31/2008
ROADWAY SEGMENT: SR-189 between North Rd. and Bear Springs Rd.
NOTES: Church of the Woods - Existing

---

* * ASSUMPTIONS * *

AVERAGE DAILY TRAFFIC: 4200 SPEED (MPH): 45 GRADE: .5

TRAFFIC DISTRIBUTION PERCENTAGES

	DAY	EVENING	NIGHT
AUTOS	75.51	12.57	9.34
M-TRUCKS	1.56	0.09	0.19
H-TRUCKS	0.64	0.02	0.08

ACTIVE HALF-WIDTH (FT): 6 SITE CHARACTERISTICS: SOFT

---

* * CALCULATED NOISE LEVELS * *

CNEL AT 50 FT FROM NEAR TRAVEL LANE CENTERLINE (dB) = 63.12

DISTANCE (FEET) FROM ROADWAY CENTERLINE TO CNEL

70 CNEL	65 CNEL	60 CNEL	55 CNEL
0.0	0.0	90.0	193.6

TABLE Existing-15
FHWA ROADWAY NOISE LEVEL ANALYSIS

RUN DATE: 01/31/2008
ROADWAY SEGMENT: SR-189 between Bear Springs Rd. and Grass Valley Rd.
NOTES: Church of the Woods - Existing

---

* * ASSUMPTIONS * *

AVERAGE DAILY TRAFFIC: 4100 SPEED (MPH): 45 GRADE: .5

TRAFFIC DISTRIBUTION PERCENTAGES

	DAY	EVENING	NIGHT
AUTOS	75.51	12.57	9.34
M-TRUCKS	1.56	0.09	0.19
H-TRUCKS	0.64	0.02	0.08

ACTIVE HALF-WIDTH (FT): 6 SITE CHARACTERISTICS: SOFT

---

* * CALCULATED NOISE LEVELS * *

CNEL AT 50 FT FROM NEAR TRAVEL LANE CENTERLINE (dB) = 63.01

DISTANCE (FEET) FROM ROADWAY CENTERLINE TO CNEL

70 CNEL	65 CNEL	60 CNEL	55 CNEL
0.0	0.0	88.6	190.5

TABLE Existing-16
FHWA ROADWAY NOISE LEVEL ANALYSIS

RUN DATE: 01/31/2008
ROADWAY SEGMENT: SR-189 between Grass Valley Rd. and Daley Canyon Rd.
NOTES: Church of the Woods - Existing

---

* * ASSUMPTIONS * *

AVERAGE DAILY TRAFFIC: 5100 SPEED (MPH): 45 GRADE: .5

TRAFFIC DISTRIBUTION PERCENTAGES

	DAY	EVENING	NIGHT
AUTOS	75.51	12.57	9.34
H-TRUCKS	1.56	0.09	0.19
M-TRUCKS	0.64	0.02	0.08

ACTIVE HALF-WIDTH (FT): 6 SITE CHARACTERISTICS: SOFT

---

* * CALCULATED NOISE LEVELS * *

CNEL AT 50 FT FROM NEAR TRAVEL LANE CENTERLINE (dB) = 63.96

DISTANCE (FEET) FROM ROADWAY CENTERLINE TO CNEL

70 CNEL	65 CNEL	60 CNEL	55 CNEL
0.0	0.0	102.4	220.3

TABLE Existing-17
FHWA ROADWAY NOISE LEVEL ANALYSIS

RUN DATE: 01/31/2008
ROADWAY SEGMENT: SR-189 between Daley Canyon Rd. and North Bay Rd.
NOTES: Church of the Woods - Existing

---

* * ASSUMPTIONS * *

AVERAGE DAILY TRAFFIC: 7100 SPEED (MPH): 45 GRADE: .5

TRAFFIC DISTRIBUTION PERCENTAGES

	DAY	EVENING	NIGHT
AUTOS	75.51	12.57	9.34
M-TRUCKS	1.56	0.09	0.19
H-TRUCKS	0.64	0.02	0.08

ACTIVE HALF-WIDTH (FT): 6 SITE CHARACTERISTICS: SOFT

---

* * CALCULATED NOISE LEVELS * *

CNEL AT 50 FT FROM NEAR TRAVEL LANE CENTERLINE (dB) = 65.40

DISTANCE (FEET) FROM ROADWAY CENTERLINE TO CNEL

70 CNEL	65 CNEL	60 CNEL	55 CNEL
0.0	59.5	127.6	274.5

TABLE Existing-18
FHWA ROADWAY NOISE LEVEL ANALYSIS

RUN DATE: 01/31/2008
ROADWAY SEGMENT: SR-189 east of North Bay Rd.
NOTES: Church of the Woods - Existing

---

* * ASSUMPTIONS * *

AVERAGE DAILY TRAFFIC: 5300 SPEED (MPH): 45 GRADE: .5

TRAFFIC DISTRIBUTION PERCENTAGES

	DAY	EVENING	NIGHT
AUTOS	75.51	12.57	9.34
M-TRUCKS	1.56	0.09	0.19
H-TRUCKS	0.64	0.02	0.08

ACTIVE HALF-WIDTH (FT): 6 SITE CHARACTERISTICS: SOFT

---

* * CALCULATED NOISE LEVELS * *

CNEL AT 50 FT FROM NEAR TRAVEL LANE CENTERLINE (dB) = 64.13

DISTANCE (FEET) FROM ROADWAY CENTERLINE TO CNEL

70 CNEL	65 CNEL	60 CNEL	55 CNEL
0.0	0.0	105.1	226.0

TABLE 2030 without project-01
FHWA ROADWAY NOISE LEVEL ANALYSIS

RUN DATE: 01/31/2008
ROADWAY SEGMENT: Bear Springs Rd. north of SR-189
NOTES: Church of the Woods - 2030 without project

---

* * ASSUMPTIONS * *

AVERAGE DAILY TRAFFIC: 3200 SPEED (MPH): 45 GRADE: .5

TRAFFIC DISTRIBUTION PERCENTAGES

	DAY	EVENING	NIGHT
AUTOS	75.51	12.57	9.34
M-TRUCKS	1.56	0.09	0.19
H-TRUCKS	0.64	0.02	0.08

ACTIVE HALF-WIDTH (FT): 6 SITE CHARACTERISTICS: SOFT

---

* * CALCULATED NOISE LEVELS * *

CNEL AT 50 FT FROM NEAR TRAVEL LANE CENTERLINE (dB) = 61.94

DISTANCE (FEET) FROM ROADWAY CENTERLINE TO CNEL

70 CNEL	65 CNEL	60 CNEL	55 CNEL
0.0	0.0	75.2	161.5

TABLE 2030 without project-02
FHWA ROADWAY NOISE LEVEL ANALYSIS

RUN DATE: 01/31/2008
ROADWAY SEGMENT: Bear Springs Rd. between SR-189 and SR-18
NOTES: Church of the Woods - 2030 without project

---

* * ASSUMPTIONS * *

AVERAGE DAILY TRAFFIC: 1300 SPEED (MPH): 45 GRADE: .5

TRAFFIC DISTRIBUTION PERCENTAGES

	DAY	EVENING	NIGHT
AUTOS	75.51	12.57	9.34
M-TRUCKS	1.56	0.09	0.19
H-TRUCKS	0.64	0.02	0.08

ACTIVE HALF-WIDTH (FT): 6 SITE CHARACTERISTICS: SOFT

---

* * CALCULATED NOISE LEVELS * *

CNEL AT 50 FT FROM NEAR TRAVEL LANE CENTERLINE (dB) = 58.02

DISTANCE (FEET) FROM ROADWAY CENTERLINE TO CNEL

70 CNEL	65 CNEL	60 CNEL	55 CNEL
0.0	0.0	0.0	88.7

TABLE 2030 without project-03
FHWA ROADWAY NOISE LEVEL ANALYSIS

RUN DATE: 01/31/2008
ROADWAY SEGMENT: Daley Canyon Rd. between SR-189 and Daley Canyon Access
NOTES: Church of the Woods - 2030 without project

---

* * ASSUMPTIONS * *

AVERAGE DAILY TRAFFIC: 11200 SPEED (MPH): 45 GRADE: .5

TRAFFIC DISTRIBUTION PERCENTAGES

	DAY	EVENING	NIGHT
AUTOS	75.51	12.57	9.34
M-TRUCKS	1.56	0.09	0.19
H-TRUCKS	0.64	0.02	0.08

ACTIVE HALF-WIDTH (FT): 6 SITE CHARACTERISTICS: SOFT

---

* * CALCULATED NOISE LEVELS * *

CNEL AT 50 FT FROM NEAR TRAVEL LANE CENTERLINE (dB) = 67.38

DISTANCE (FEET) FROM ROADWAY CENTERLINE TO CNEL

70 CNEL	65 CNEL	60 CNEL	55 CNEL
0.0	80.4	172.8	372.0

TABLE 2030 without project-04
FHWA ROADWAY NOISE LEVEL ANALYSIS

RUN DATE: 01/31/2008
ROADWAY SEGMENT: Daley Canyon Rd. between Daley Canyon Access and SR-18
NOTES: Church of the Woods - 2030 without project

---

* * ASSUMPTIONS * *

AVERAGE DAILY TRAFFIC: 8200 SPEED (MPH): 45 GRADE: .5

TRAFFIC DISTRIBUTION PERCENTAGES

	DAY	EVENING	NIGHT
AUTOS	75.51	12.57	9.34
M-TRUCKS	1.56	0.09	0.19
H-TRUCKS	0.64	0.02	0.08

ACTIVE HALF-WIDTH (FT): 6 SITE CHARACTERISTICS: SOFT

---

* * CALCULATED NOISE LEVELS * *

CNEL AT 50 FT FROM NEAR TRAVEL LANE CENTERLINE (dB) = 66.02

DISTANCE (FEET) FROM ROADWAY CENTERLINE TO CNEL

70 CNEL	65 CNEL	60 CNEL	55 CNEL
0.0	65.4	140.4	302.2

TABLE 2030 without project-05
FHWA ROADWAY NOISE LEVEL ANALYSIS

RUN DATE: 01/31/2008
ROADWAY SEGMENT: SR-173 north of SR-18
NOTES: Church of the Woods - 2030 without project

---

* * ASSUMPTIONS * *

AVERAGE DAILY TRAFFIC: 9200 SPEED (MPH): 45 GRADE: .5

TRAFFIC DISTRIBUTION PERCENTAGES

	DAY	EVENING	NIGHT
AUTOS	75.51	12.57	9.34
M-TRUCKS	1.56	0.09	0.19
H-TRUCKS	0.64	0.02	0.08

ACTIVE HALF-WIDTH (FT): 6 SITE CHARACTERISTICS: SOFT

---

* * CALCULATED NOISE LEVELS * *

CNEL AT 50 FT FROM NEAR TRAVEL LANE CENTERLINE (dB) = 66.52

DISTANCE (FEET) FROM ROADWAY CENTERLINE TO CNEL

70 CNEL	65 CNEL	60 CNEL	55 CNEL
0.0	70.6	151.6	326.3

TABLE 2030 without project-06
FHWA ROADWAY NOISE LEVEL ANALYSIS

RUN DATE: 01/31/2008
ROADWAY SEGMENT: SR-18 west of Lake Gregory Dr.
NOTES: Church of the Woods - 2030 without project

---

* * ASSUMPTIONS * *

AVERAGE DAILY TRAFFIC: 12200 SPEED (MPH): 45 GRADE: .5

TRAFFIC DISTRIBUTION PERCENTAGES

	DAY	EVENING	NIGHT
AUTOS	75.51	12.57	9.34
M-TRUCKS	1.56	0.09	0.19
H-TRUCKS	0.64	0.02	0.08

ACTIVE HALF-WIDTH (FT): 6 SITE CHARACTERISTICS: SOFT

---

* * CALCULATED NOISE LEVELS * *

CNEL AT 50 FT FROM NEAR TRAVEL LANE CENTERLINE (dB) = 67.75

DISTANCE (FEET) FROM ROADWAY CENTERLINE TO CNEL

70 CNEL	65 CNEL	60 CNEL	55 CNEL
0.0	85.1	182.9	393.8

TABLE 2030 without project-07
FHWA ROADWAY NOISE LEVEL ANALYSIS

RUN DATE: 01/31/2008
ROADWAY SEGMENT: SR-18 between Lake Gregory Dr. and Bear Springs Rd.
NOTES: Church of the Woods - 2030 without project

---

* * ASSUMPTIONS * *

AVERAGE DAILY TRAFFIC: 13600 SPEED (MPH): 45 GRADE: .5

TRAFFIC DISTRIBUTION PERCENTAGES

	DAY	EVENING	NIGHT
AUTOS	75.51	12.57	9.34
M-TRUCKS	1.56	0.09	0.19
H-TRUCKS	0.64	0.02	0.08

ACTIVE HALF-WIDTH (FT): 6 SITE CHARACTERISTICS: SOFT

---

* * CALCULATED NOISE LEVELS * *

CNEL AT 50 FT FROM NEAR TRAVEL LANE CENTERLINE (dB) = 68.22

DISTANCE (FEET) FROM ROADWAY CENTERLINE TO CNEL

70 CNEL	65 CNEL	60 CNEL	55 CNEL
0.0	91.4	196.6	423.4

TABLE 2030 without project-08
FHWA ROADWAY NOISE LEVEL ANALYSIS

RUN DATE: 01/31/2008
ROADWAY SEGMENT: SR-18 between Bear Springs Rd. and Project Access
NOTES: Church of the Woods - 2030 without project

---

* * ASSUMPTIONS * *

AVERAGE DAILY TRAFFIC: 15300 SPEED (MPH): 45 GRADE: .5

TRAFFIC DISTRIBUTION PERCENTAGES

	DAY	EVENING	NIGHT
AUTOS	75.51	12.57	9.34
M-TRUCKS	1.56	0.09	0.19
H-TRUCKS	0.64	0.02	0.08

ACTIVE HALF-WIDTH (FT): 6 SITE CHARACTERISTICS: SOFT

---

* * CALCULATED NOISE LEVELS * *

CNEL AT 50 FT FROM NEAR TRAVEL LANE CENTERLINE (dB) = 68.73

DISTANCE (FEET) FROM ROADWAY CENTERLINE TO CNEL

70 CNEL	65 CNEL	60 CNEL	55 CNEL
0.0	98.9	212.7	458.0

TABLE 2030 without project-09
FHWA ROADWAY NOISE LEVEL ANALYSIS

RUN DATE: 01/31/2008
ROADWAY SEGMENT: SR-18 between Project Acess and Daley Canyon Rd.
NOTES: Church of the Woods - 2030 without project

---

* * ASSUMPTIONS * *

AVERAGE DAILY TRAFFIC: 15300 SPEED (MPH): 45 GRADE: .5

TRAFFIC DISTRIBUTION PERCENTAGES

	DAY	EVENING	NIGHT
AUTOS	75.51	12.57	9.34
M-TRUCKS	1.56	0.09	0.19
H-TRUCKS	0.64	0.02	0.08

ACTIVE HALF-WIDTH (FT): 6 SITE CHARACTERISTICS: SOFT

---

* * CALCULATED NOISE LEVELS * *

CNEL AT 50 FT FROM NEAR TRAVEL LANE CENTERLINE (dB) = 68.73

DISTANCE (FEET) FROM ROADWAY CENTERLINE TO CNEL

70 CNEL	65 CNEL	60 CNEL	55 CNEL
0.0	98.9	212.7	458.0

TABLE 2030 without project-10
FHWA ROADWAY NOISE LEVEL ANALYSIS

:UN DATE: 01/31/2008
:OADWAY SEGMENT: SR-18 between Daley Canyon Rd. and Daley Canyon Access
IOTES: Church of the Woods - 2030 without project

---

* * ASSUMPTIONS * *

.VERAGE DAILY TRAFFIC: 7300 SPEED (MPH): 45 GRADE: .5

TRAFFIC DISTRIBUTION PERCENTAGES

	DAY	EVENING	NIGHT
.UTOS	75.51	12.57	9.34
I-TRUCKS	1.56	0.09	0.19
:-TRUCKS	0.64	0.02	0.08

.CTIVE HALF-WIDTH (FT): 6 SITE CHARACTERISTICS: SOFT

---

* * CALCULATED NOISE LEVELS * *

NEL AT 50 FT FROM NEAR TRAVEL LANE CENTERLINE (dB) = 65.52

DISTANCE (FEET) FROM ROADWAY CENTERLINE TO CNEL

70 CNEL	65 CNEL	60 CNEL	55 CNEL
0.0	60.6	129.9	279.7

TABLE 2030 without project-11
FHWA ROADWAY NOISE LEVEL ANALYSIS

:UN DATE: 01/31/2008
:OADWAY SEGMENT: SR-18 between Daley Canyon Access and SR-173
IOTES: Church of the Woods - 2030 without project

---

* * ASSUMPTIONS * *

.VERAGE DAILY TRAFFIC: 11800 SPEED (MPH): 45 GRADE: .5

TRAFFIC DISTRIBUTION PERCENTAGES

	DAY	EVENING	NIGHT
.UTOS	75.51	12.57	9.34
I-TRUCKS	1.56	0.09	0.19
:-TRUCKS	0.64	0.02	0.08

.CTIVE HALF-WIDTH (FT): 6 SITE CHARACTERISTICS: SOFT

---

* * CALCULATED NOISE LEVELS * *

NEL AT 50 FT FROM NEAR TRAVEL LANE CENTERLINE (dB) = 67.60

DISTANCE (FEET) FROM ROADWAY CENTERLINE TO CNEL

70 CNEL	65 CNEL	60 CNEL	55 CNEL
0.0	83.2	178.9	385.2

TABLE 2030 without project-12
FHWA ROADWAY NOISE LEVEL ANALYSIS

RUN DATE: 01/31/2008
ROADWAY SEGMENT: SR-18 east of SR-173
NOTES: Church of the Woods - 2030 without project

---

* * ASSUMPTIONS * *

AVERAGE DAILY TRAFFIC: 7300 SPEED (MPH): 45 GRADE: .5

TRAFFIC DISTRIBUTION PERCENTAGES

	DAY	EVENING	NIGHT
AUTOS	75.51	12.57	9.34
M-TRUCKS	1.56	0.09	0.19
H-TRUCKS	0.64	0.02	0.08

ACTIVE HALF-WIDTH (FT): 6 SITE CHARACTERISTICS: SOFT

---

* * CALCULATED NOISE LEVELS * *

CNEL AT 50 FT FROM NEAR TRAVEL LANE CENTERLINE (dB) = 65.52

DISTANCE (FEET) FROM ROADWAY CENTERLINE TO CNEL

70 CNEL	65 CNEL	60 CNEL	55 CNEL
0.0	60.6	129.9	279.7

TABLE 2030 without project-13
FHWA ROADWAY NOISE LEVEL ANALYSIS

RUN DATE: 01/31/2008
ROADWAY SEGMENT: SR-189 between Lake Gregory Dr. and North Rd.
NOTES: Church of the Woods - 2030 without project

---

* * ASSUMPTIONS * *

AVERAGE DAILY TRAFFIC: 4400 SPEED (MPH): 45 GRADE: .5

TRAFFIC DISTRIBUTION PERCENTAGES

	DAY	EVENING	NIGHT
AUTOS	75.51	12.57	9.34
M-TRUCKS	1.56	0.09	0.19
H-TRUCKS	0.64	0.02	0.08

ACTIVE HALF-WIDTH (FT): 6 SITE CHARACTERISTICS: SOFT

---

* * CALCULATED NOISE LEVELS * *

CNEL AT 50 FT FROM NEAR TRAVEL LANE CENTERLINE (dB) = 63.32

DISTANCE (FEET) FROM ROADWAY CENTERLINE TO CNEL

70 CNEL	65 CNEL	60 CNEL	55 CNEL
0.0	0.0	92.8	199.6

TABLE 2030 without project-14
FHWA ROADWAY NOISE LEVEL ANALYSIS

RUN DATE: 01/31/2008
ROADWAY SEGMENT: SR-189 between North Rd. and Bear Springs Rd.
NOTES: Church of the Woods - 2030 without project

---

* * ASSUMPTIONS * *

AVERAGE DAILY TRAFFIC: 6200 SPEED (MPH): 45 GRADE: .5

TRAFFIC DISTRIBUTION PERCENTAGES

	DAY	EVENING	NIGHT
AUTOS	75.51	12.57	9.34
M-TRUCKS	1.56	0.09	0.19
H-TRUCKS	0.64	0.02	0.08

ACTIVE HALF-WIDTH (FT): 6 SITE CHARACTERISTICS: SOFT

---

* * CALCULATED NOISE LEVELS * *

CNEL AT 50 FT FROM NEAR TRAVEL LANE CENTERLINE (dB) = 64.81

DISTANCE (FEET) FROM ROADWAY CENTERLINE TO CNEL

70 CNEL	65 CNEL	60 CNEL	55 CNEL
0.0	54.4	116.6	250.8

TABLE 2030 without project-15
FHWA ROADWAY NOISE LEVEL ANALYSIS

RUN DATE: 01/31/2008
ROADWAY SEGMENT: SR-189 between Bear Springs Rd. and Grass Valley Rd.
NOTES: Church of the Woods - 2030 without project

---

* * ASSUMPTIONS * *

AVERAGE DAILY TRAFFIC: 6200 SPEED (MPH): 45 GRADE: .5

TRAFFIC DISTRIBUTION PERCENTAGES

	DAY	EVENING	NIGHT
AUTOS	75.51	12.57	9.34
M-TRUCKS	1.56	0.09	0.19
H-TRUCKS	0.64	0.02	0.08

ACTIVE HALF-WIDTH (FT): 6 SITE CHARACTERISTICS: SOFT

---

* * CALCULATED NOISE LEVELS * *

CNEL AT 50 FT FROM NEAR TRAVEL LANE CENTERLINE (dB) = 64.81

DISTANCE (FEET) FROM ROADWAY CENTERLINE TO CNEL

70 CNEL	65 CNEL	60 CNEL	55 CNEL
0.0	54.4	116.6	250.8

TABLE 2030 without project-16
FHWA ROADWAY NOISE LEVEL ANALYSIS

RUN DATE: 01/31/2008
ROADWAY SEGMENT: SR-189 between Grass Valley Rd. and Daley Canyon Rd.
NOTES: Church of the Woods - 2030 without project

---

* * ASSUMPTIONS * *

AVERAGE DAILY TRAFFIC: 9200 SPEED (MPH): 45 GRADE: .5

TRAFFIC DISTRIBUTION PERCENTAGES

	DAY	EVENING	NIGHT
AUTOS	75.51	12.57	9.34
M-TRUCKS	1.56	0.09	0.19
H-TRUCKS	0.64	0.02	0.08

ACTIVE HALF-WIDTH (FT): 6 SITE CHARACTERISTICS: SOFT

---

* * CALCULATED NOISE LEVELS * *

CNEL AT 50 FT FROM NEAR TRAVEL LANE CENTERLINE (dB) = 66.52

DISTANCE (FEET) FROM ROADWAY CENTERLINE TO CNEL

70 CNEL	65 CNEL	60 CNEL	55 CNEL
0.0	70.6	151.6	326.3

TABLE 2030 without project-17
FHWA ROADWAY NOISE LEVEL ANALYSIS

RUN DATE: 01/31/2008
ROADWAY SEGMENT: SR-189 between Daley Canyon Rd. and North Bay Rd.
NOTES: Church of the Woods - 2030 without project

---

* * ASSUMPTIONS * *

AVERAGE DAILY TRAFFIC: 11200 SPEED (MPH): 45 GRADE: .5

TRAFFIC DISTRIBUTION PERCENTAGES

	DAY	EVENING	NIGHT
AUTOS	75.51	12.57	9.34
M-TRUCKS	1.56	0.09	0.19
H-TRUCKS	0.64	0.02	0.08

ACTIVE HALF-WIDTH (FT): 6 SITE CHARACTERISTICS: SOFT

---

* * CALCULATED NOISE LEVELS * *

CNEL AT 50 FT FROM NEAR TRAVEL LANE CENTERLINE (dB) = 67.38

DISTANCE (FEET) FROM ROADWAY CENTERLINE TO CNEL

70 CNEL	65 CNEL	60 CNEL	55 CNEL
0.0	80.4	172.8	372.0

TABLE 2030 without project-18
FHWA ROADWAY NOISE LEVEL ANALYSIS

RUN DATE: 01/31/2008
ROADWAY SEGMENT: SR-189 east of North Bay Rd.
NOTES: Church of the Woods - 2030 without project

---

* * ASSUMPTIONS * *

AVERAGE DAILY TRAFFIC: 7700 SPEED (MPH): 45 GRADE: .5

TRAFFIC DISTRIBUTION PERCENTAGES

	DAY	EVENING	NIGHT
AUTOS	75.51	12.57	9.34
M-TRUCKS	1.56	0.09	0.19
H-TRUCKS	0.64	0.02	0.08

ACTIVE HALF-WIDTH (FT): 6 SITE CHARACTERISTICS: SOFT

---

* * CALCULATED NOISE LEVELS * *

CNEL AT 50 FT FROM NEAR TRAVEL LANE CENTERLINE (dB) = 65.75

DISTANCE (FEET) FROM ROADWAY CENTERLINE TO CNEL

70 CNEL	65 CNEL	60 CNEL	55 CNEL
0.0	62.7	134.6	289.8

TABLE 2030 with project-01
FHWA ROADWAY NOISE LEVEL ANALYSIS

RUN DATE: 01/31/2008
ROADWAY SEGMENT: Bear Springs Rd. north of SR-189
NOTES: Church of the Woods - 2030 with project

---

* * ASSUMPTIONS * *

AVERAGE DAILY TRAFFIC: 3200 SPEED (MPH): 45 GRADE: .5

TRAFFIC DISTRIBUTION PERCENTAGES

	DAY	EVENING	NIGHT
AUTOS	75.51	12.57	9.34
M-TRUCKS	1.56	0.09	0.19
H-TRUCKS	0.64	0.02	0.08

ACTIVE HALF-WIDTH (FT): 6 SITE CHARACTERISTICS: SOFT

---

* * CALCULATED NOISE LEVELS * *

CNEL AT 50 FT FROM NEAR TRAVEL LANE CENTERLINE (dB) = 61.94

DISTANCE (FEET) FROM ROADWAY CENTERLINE TO CNEL

70 CNEL	65 CNEL	60 CNEL	55 CNEL
0.0	0.0	75.2	161.5

TABLE 2030 with project-02
FHWA ROADWAY NOISE LEVEL ANALYSIS

RUN DATE: 01/31/2008
ROADWAY SEGMENT: Bear Springs Rd. between SR-189 and SR-18
NOTES: Church of the Woods - 2030 with project

---

* * ASSUMPTIONS * *

AVERAGE DAILY TRAFFIC: 1600 SPEED (MPH): 45 GRADE: .5

TRAFFIC DISTRIBUTION PERCENTAGES

	DAY	EVENING	NIGHT
AUTOS	75.51	12.57	9.34
M-TRUCKS	1.56	0.09	0.19
H-TRUCKS	0.64	0.02	0.08

ACTIVE HALF-WIDTH (FT): 6 SITE CHARACTERISTICS: SOFT

---

* * CALCULATED NOISE LEVELS * *

CNEL AT 50 FT FROM NEAR TRAVEL LANE CENTERLINE (dB) = 58.93

DISTANCE (FEET) FROM ROADWAY CENTERLINE TO CNEL

70 CNEL	65 CNEL	60 CNEL	55 CNEL
0.0	0.0	0.0	101.9

TABLE 2030 with project-03
FHWA ROADWAY NOISE LEVEL ANALYSIS

RUN DATE: 01/31/2008
ROADWAY SEGMENT: Daley Canyon Rd. between SR-189 and Daley Canyon Access
NOTES: Church of the Woods - 2030 with project

---

* * ASSUMPTIONS * *

AVERAGE DAILY TRAFFIC: 12500 SPEED (MPH): 45 GRADE: .5

TRAFFIC DISTRIBUTION PERCENTAGES

	DAY	EVENING	NIGHT
AUTOS	75.51	12.57	9.34
M-TRUCKS	1.56	0.09	0.19
H-TRUCKS	0.64	0.02	0.08

ACTIVE HALF-WIDTH (FT): 6 SITE CHARACTERISTICS: SOFT

---

* * CALCULATED NOISE LEVELS * *

CNEL AT 50 FT FROM NEAR TRAVEL LANE CENTERLINE (dB) = 67.85

DISTANCE (FEET) FROM ROADWAY CENTERLINE TO CNEL

70 CNEL	65 CNEL	60 CNEL	55 CNEL
0.0	86.5	185.9	400.2

TABLE 2030 with project-04
FHWA ROADWAY NOISE LEVEL ANALYSIS

RUN DATE: 01/31/2008
ROADWAY SEGMENT: Daley Canyon Rd. between Daley Canyon Access and SR-18
NOTES: Church of the Woods - 2030 with project

---

* * ASSUMPTIONS * *

AVERAGE DAILY TRAFFIC: 9300 SPEED (MPH): 45 GRADE: .5

TRAFFIC DISTRIBUTION PERCENTAGES

	DAY	EVENING	NIGHT
AUTOS	75.51	12.57	9.34
M-TRUCKS	1.56	0.09	0.19
H-TRUCKS	0.64	0.02	0.08

ACTIVE HALF-WIDTH (FT): 6 SITE CHARACTERISTICS: SOFT

---

* * CALCULATED NOISE LEVELS * *

CNEL AT 50 FT FROM NEAR TRAVEL LANE CENTERLINE (dB) = 66.57

DISTANCE (FEET) FROM ROADWAY CENTERLINE TO CNEL

70 CNEL	65 CNEL	60 CNEL	55 CNEL
0.0	71.1	152.7	328.6

TABLE 2030 with project-05
FHWA ROADWAY NOISE LEVEL ANALYSIS

:UN DATE: 01/31/2008
:OADWAY SEGMENT: SR-173 north of SR-18
IOTES: Church of the Woods - 2030 with project

---

* * ASSUMPTIONS * *

.VERAGE DAILY TRAFFIC: 9700 SPEED (MPH): 45 GRADE: .5

TRAFFIC DISTRIBUTION PERCENTAGES

	DAY	EVENING	NIGHT
.UTOS	75.51	12.57	9.34
I-TRUCKS	1.56	0.09	0.19
:-TRUCKS	0.64	0.02	0.08

.CTIVE HALF-WIDTH (FT): 6 SITE CHARACTERISTICS: SOFT

---

* * CALCULATED NOISE LEVELS * *

'NEL AT 50 FT FROM NEAR TRAVEL LANE CENTERLINE (dB) = 66.75

DISTANCE (FEET) FROM ROADWAY CENTERLINE TO CNEL

70 CNEL	65 CNEL	60 CNEL	55 CNEL
0.0	73.1	157.0	338.0

TABLE 2030 with project-06
FHWA ROADWAY NOISE LEVEL ANALYSIS

RUN DATE: 01/31/2008
ROADWAY SEGMENT: SR-18 west of Lake Gregory Dr.
NOTES: Church of the Woods - 2030 with project

---

* * ASSUMPTIONS * *

AVERAGE DAILY TRAFFIC: 12500 SPEED (MPH): 45 GRADE: .5

TRAFFIC DISTRIBUTION PERCENTAGES

	DAY	EVENING	NIGHT
AUTOS	75.51	12.57	9.34
M-TRUCKS	1.56	0.09	0.19
H-TRUCKS	0.64	0.02	0.08

ACTIVE HALF-WIDTH (FT): 6 SITE CHARACTERISTICS: SOFT

---

* * CALCULATED NOISE LEVELS * *

CNEL AT 50 FT FROM NEAR TRAVEL LANE CENTERLINE (dB) = 67.85

DISTANCE (FEET) FROM ROADWAY CENTERLINE TO CNEL

70 CNEL	65 CNEL	60 CNEL	55 CNEL
0.0	86.5	185.9	400.2

TABLE 2030 with project-07
FHWA ROADWAY NOISE LEVEL ANALYSIS

RUN DATE: 01/31/2008
ROADWAY SEGMENT: SR-18 between Lake Gregory Dr. and Bear Springs Rd.
NOTES: Church of the Woods - 2030 with project

---

* * ASSUMPTIONS * *

AVERAGE DAILY TRAFFIC: 14400 SPEED (MPH): 45 GRADE: .5

TRAFFIC DISTRIBUTION PERCENTAGES

	DAY	EVENING	NIGHT
AUTOS	75.51	12.57	9.34
M-TRUCKS	1.56	0.09	0.19
H-TRUCKS	0.64	0.02	0.08

ACTIVE HALF-WIDTH (FT): 6 SITE CHARACTERISTICS: SOFT

---

* * CALCULATED NOISE LEVELS * *

CNEL AT 50 FT FROM NEAR TRAVEL LANE CENTERLINE (dB) = 68.47

DISTANCE (FEET) FROM ROADWAY CENTERLINE TO CNEL

70 CNEL	65 CNEL	60 CNEL	55 CNEL
0.0	95.0	204.3	439.8

TABLE 2030 with project-08
FHWA ROADWAY NOISE LEVEL ANALYSIS

RUN DATE: 01/31/2008
ROADWAY SEGMENT: SR-18 between Bear Springs Rd. and Project Access
NOTES: Church of the Woods - 2030 with project

---

* * ASSUMPTIONS * *

AVERAGE DAILY TRAFFIC: 16500 SPEED (MPH): 45 GRADE: .5

TRAFFIC DISTRIBUTION PERCENTAGES

	DAY	EVENING	NIGHT
AUTOS	75.51	12.57	9.34
M-TRUCKS	1.56	0.09	0.19
H-TRUCKS	0.64	0.02	0.08

ACTIVE HALF-WIDTH (FT): 6 SITE CHARACTERISTICS: SOFT

---

* * CALCULATED NOISE LEVELS * *

CNEL AT 50 FT FROM NEAR TRAVEL LANE CENTERLINE (dB) = 69.06

DISTANCE (FEET) FROM ROADWAY CENTERLINE TO CNEL

70 CNEL	65 CNEL	60 CNEL	55 CNEL
0.0	104.0	223.6	481.6

TABLE 2030 with project-09
FHWA ROADWAY NOISE LEVEL ANALYSIS

RUN DATE: 01/31/2008
ROADWAY SEGMENT: SR-18 between Project Acess and Daley Canyon Rd.
NOTES: Church of the Woods - 2030 with project

---

* * ASSUMPTIONS * *

AVERAGE DAILY TRAFFIC: 16500 SPEED (MPH): 45 GRADE: .5

TRAFFIC DISTRIBUTION PERCENTAGES

	DAY	EVENING	NIGHT
AUTOS	75.51	12.57	9.34
M-TRUCKS	1.56	0.09	0.19
H-TRUCKS	0.64	0.02	0.08

ACTIVE HALF-WIDTH (FT): 6 SITE CHARACTERISTICS: SOFT

---

* * CALCULATED NOISE LEVELS * *

CNEL AT 50 FT FROM NEAR TRAVEL LANE CENTERLINE (dB) = 69.06

DISTANCE (FEET) FROM ROADWAY CENTERLINE TO CNEL

70 CNEL	65 CNEL	60 CNEL	55 CNEL
0.0	104.0	223.6	481.6

TABLE 2030 with project-10
FHWA ROADWAY NOISE LEVEL ANALYSIS

RUN DATE: 01/31/2008
ROADWAY SEGMENT: SR-18 between Daley Canyon Rd. and Daley Canyon Access
NOTES: Church of the Woods - 2030 with project

---

* * ASSUMPTIONS * *

AVERAGE DAILY TRAFFIC: 8100 SPEED (MPH): 45 GRADE: .5

TRAFFIC DISTRIBUTION PERCENTAGES

	DAY	EVENING	NIGHT
AUTOS	75.51	12.57	9.34
M-TRUCKS	1.56	0.09	0.19
H-TRUCKS	0.64	0.02	0.08

ACTIVE HALF-WIDTH (FT): 6 SITE CHARACTERISTICS: SOFT

---

* * CALCULATED NOISE LEVELS * *

CNEL AT 50 FT FROM NEAR TRAVEL LANE CENTERLINE (dB) = 65.97

DISTANCE (FEET) FROM ROADWAY CENTERLINE TO CNEL

70 CNEL	65 CNEL	60 CNEL	55 CNEL
0.0	64.9	139.3	299.7

TABLE 2030 with project-11
FHWA ROADWAY NOISE LEVEL ANALYSIS

RUN DATE: 01/31/2008
ROADWAY SEGMENT: SR-18 between Daley Canyon Access and SR-173
NOTES: Church of the Woods - 2030 with project

---

* * ASSUMPTIONS * *

AVERAGE DAILY TRAFFIC: 12500 SPEED (MPH): 45 GRADE: .5

TRAFFIC DISTRIBUTION PERCENTAGES

	DAY	EVENING	NIGHT
AUTOS	75.51	12.57	9.34
M-TRUCKS	1.56	0.09	0.19
H-TRUCKS	0.64	0.02	0.08

ACTIVE HALF-WIDTH (FT): 6 SITE CHARACTERISTICS: SOFT

---

* * CALCULATED NOISE LEVELS * *

NEL AT 50 FT FROM NEAR TRAVEL LANE CENTERLINE (dB) = 67.85

DISTANCE (FEET) FROM ROADWAY CENTERLINE TO CNEL

70 CNEL	65 CNEL	60 CNEL	55 CNEL
0.0	86.5	185.9	400.2

TABLE 2030 with project-12
FHWA ROADWAY NOISE LEVEL ANALYSIS

RUN DATE: 01/31/2008
ROADWAY SEGMENT: SR-18 east of SR-173
NOTES: Church of the Woods - 2030 with project

---

* * ASSUMPTIONS * *

AVERAGE DAILY TRAFFIC: 7400 SPEED (MPH): 45 GRADE: .5

TRAFFIC DISTRIBUTION PERCENTAGES

	DAY	EVENING	NIGHT
AUTOS	75.51	12.57	9.34
M-TRUCKS	1.56	0.09	0.19
H-TRUCKS	0.64	0.02	0.08

ACTIVE HALF-WIDTH (FT): 6 SITE CHARACTERISTICS: SOFT

---

* * CALCULATED NOISE LEVELS * *

CNEL AT 50 FT FROM NEAR TRAVEL LANE CENTERLINE (dB) = 65.58

DISTANCE (FEET) FROM ROADWAY CENTERLINE TO CNEL

70 CNEL	65 CNEL	60 CNEL	55 CNEL
0.0	61.1	131.1	282.2

TABLE 2030 with project-13
FHWA ROADWAY NOISE LEVEL ANALYSIS

RUN DATE: 01/31/2008
ROADWAY SEGMENT: SR-189 between Lake Gregory Dr. and North Rd.
NOTES: Church of the Woods - 2030 with project

---

* * ASSUMPTIONS * *

AVERAGE DAILY TRAFFIC: 4400 SPEED (MPH): 45 GRADE: .5

TRAFFIC DISTRIBUTION PERCENTAGES

	DAY	EVENING	NIGHT
AUTOS	75.51	12.57	9.34
M-TRUCKS	1.56	0.09	0.19
H-TRUCKS	0.64	0.02	0.08

ACTIVE HALF-WIDTH (FT): 6 SITE CHARACTERISTICS: SOFT

---

* * CALCULATED NOISE LEVELS * *

CNEL AT 50 FT FROM NEAR TRAVEL LANE CENTERLINE (dB) = 63.32

DISTANCE (FEET) FROM ROADWAY CENTERLINE TO CNEL

70 CNEL	65 CNEL	60 CNEL	55 CNEL
0.0	0.0	92.8	199.6

TABLE 2030 with project-14
FHWA ROADWAY NOISE LEVEL ANALYSIS

RUN DATE: 01/31/2008
ROADWAY SEGMENT: SR-189 between North Rd. and Bear Springs Rd.
NOTES: Church of the Woods - 2030 with project

---

* * ASSUMPTIONS * *

AVERAGE DAILY TRAFFIC: 6400 SPEED (MPH): 45 GRADE: .5

TRAFFIC DISTRIBUTION PERCENTAGES

	DAY	EVENING	NIGHT
AUTOS	75.51	12.57	9.34
M-TRUCKS	1.56	0.09	0.19
H-TRUCKS	0.64	0.02	0.08

ACTIVE HALF-WIDTH (FT): 6 SITE CHARACTERISTICS: SOFT

---

* * CALCULATED NOISE LEVELS * *

CNEL AT 50 FT FROM NEAR TRAVEL LANE CENTERLINE (dB) = 64.95

DISTANCE (FEET) FROM ROADWAY CENTERLINE TO CNEL

70 CNEL	65 CNEL	60 CNEL	55 CNEL
0.0	55.5	119.1	256.2

TABLE 2030 with project-15
FHWA ROADWAY NOISE LEVEL ANALYSIS

RUN DATE: 01/31/2008
ROADWAY SEGMENT: SR-189 between Bear Springs Rd. and Grass Valley Rd.
NOTES: Church of the Woods - 2030 with project

---

* * ASSUMPTIONS * *

AVERAGE DAILY TRAFFIC: 6200 SPEED (MPH): 45 GRADE: .5

TRAFFIC DISTRIBUTION PERCENTAGES

	DAY	EVENING	NIGHT
AUTOS	75.51	12.57	9.34
M-TRUCKS	1.56	0.09	0.19
H-TRUCKS	0.64	0.02	0.08

ACTIVE HALF-WIDTH (FT): 6 SITE CHARACTERISTICS: SOFT

---

* * CALCULATED NOISE LEVELS * *

CNEL AT 50 FT FROM NEAR TRAVEL LANE CENTERLINE (dB) = 64.81

DISTANCE (FEET) FROM ROADWAY CENTERLINE TO CNEL

70 CNEL	65 CNEL	60 CNEL	55 CNEL
0.0	54.4	116.6	250.8

TABLE 2030 with project-16
FHWA ROADWAY NOISE LEVEL ANALYSIS

:UN DATE: 01/31/2008
:OADWAY SEGMENT: SR-189 between Grass Valley Rd. and Daley Canyon Rd.
:OTES: Church of the Woods - 2030 with project

---

* * ASSUMPTIONS * *

.VERAGE DAILY TRAFFIC: 9700 SPEED (MPH): 45 GRADE: .5

TRAFFIC DISTRIBUTION PERCENTAGES

	DAY	EVENING	NIGHT
.UTOS	75.51	12.57	9.34
I-TRUCKS	1.56	0.09	0.19
:-TRUCKS	0.64	0.02	0.08

.CTIVE HALF-WIDTH (FT): 6 SITE CHARACTERISTICS: SOFT

---

* * CALCULATED NOISE LEVELS * *

NEL AT 50 FT FROM NEAR TRAVEL LANE CENTERLINE (dB) = 66.75

DISTANCE (FEET) FROM ROADWAY CENTERLINE TO CNEL

70 CNEL	65 CNEL	60 CNEL	55 CNEL
0.0	73.1	157.0	338.0

TABLE 2030 with project-17
FHWA ROADWAY NOISE LEVEL ANALYSIS

RUN DATE: 01/31/2008
ROADWAY SEGMENT: SR-189 between Daley Canyon Rd. and North Bay Rd.
NOTES: Church of the Woods - 2030 with project

---

* * ASSUMPTIONS * *

AVERAGE DAILY TRAFFIC: 12000 SPEED (MPH): 45 GRADE: .5

TRAFFIC DISTRIBUTION PERCENTAGES

	DAY	EVENING	NIGHT
AUTOS	75.51	12.57	9.34
M-TRUCKS	1.56	0.09	0.19
H-TRUCKS	0.64	0.02	0.08

ACTIVE HALF-WIDTH (FT): 6 SITE CHARACTERISTICS: SOFT

---

* * CALCULATED NOISE LEVELS * *

CNEL AT 50 FT FROM NEAR TRAVEL LANE CENTERLINE (dB) = 67.68

DISTANCE (FEET) FROM ROADWAY CENTERLINE TO CNEL

70 CNEL	65 CNEL	60 CNEL	55 CNEL
0.0	84.2	180.9	389.5

TABLE 2030 with project-18
FHWA ROADWAY NOISE LEVEL ANALYSIS

RUN DATE: 01/31/2008
ROADWAY SEGMENT: SR-189 east of North Bay Rd.
NOTES: Church of the Woods - 2030 with project

---

* * ASSUMPTIONS * *

AVERAGE DAILY TRAFFIC: 8200 SPEED (MPH): 45 GRADE: .5

TRAFFIC DISTRIBUTION PERCENTAGES

	DAY	EVENING	NIGHT
AUTOS	75.51	12.57	9.34
M-TRUCKS	1.56	0.09	0.19
H-TRUCKS	0.64	0.02	0.08

ACTIVE HALF-WIDTH (FT): 6 SITE CHARACTERISTICS: SOFT

---

* * CALCULATED NOISE LEVELS * *

CNEL AT 50 FT FROM NEAR TRAVEL LANE CENTERLINE (dB) = 66.02

DISTANCE (FEET) FROM ROADWAY CENTERLINE TO CNEL

70 CNEL	65 CNEL	60 CNEL	55 CNEL
0.0	65.4	140.4	302.2

APPENDIX C

PROTECTIVE NOISE LEVELS: CONDENSED VERSION OF EPA LEVELS

United States
Environmental Protection
Agency

Office of Noise
Abatement & Control
Washington, D.C. 20460

November 1978
EPA 550/9-79-100

EPA

Protective Noise Levels

Condensed Version of EPA Levels Document

D. W. FITZWATER

PURPOSE

This publication is intended to complement the EPA's "Levels Document,"* the 1974 report examining levels of environmental noise necessary to protect public health and welfare. It interprets the contents of the Levels Document in less technical terms for people who wish to better understand the concepts presented there, and how the protective levels were identified. In that sense, this publication may serve as an introduction, or a supplement, to the Levels Document.

* "Information on Levels of Environmental Noise Requisite to Protect Public Health and Welfare with an Adequate Margin of Safety," EPA/ONAC 550/9-74-004, March, 1974.

TABLE OF CONTENTS

PAGE

PURPOSE ii

TABLE OF CONTENTS iii

INTRODUCTION 1

ABOUT SOUND 3
- Amplitude 3
- Frequency 3
- Time Pattern 3

MEASUREMENT OF ENVIRONMENTAL NOISE: SOUND DESCRIPTORS 3
- A-Weighted Sound Level 4
- Sound Exposure Level 4
- Equivalent Sound Level 4
- Day-Night Sound Level 9

LEVELS OF ENVIRONMENTAL NOISE IN THE UNITED STATES 9
- Outdoor Levels 9
- Relationship Between Indoor and Outdoor Levels 11

INDIVIDUAL NOISE EXPOSURE PATTERNS 11

HEARING DAMAGE FROM ENVIRONMENTAL NOISE 15
- Basic Assumptions Involved in Determining Protective Levels 15
- Calculation of the Maximum Allowable Noise Exposure 17
- Discussion of Assumptions 17

SPEECH COMMUNICATION 18
- Speech Interference Indoors 18
- Speech Interference Outdoors 18
- Discussion 20

ACTIVITY INTERFERENCE AND ANNOYANCE 20
- Activity Interference 20
- Community Reactions to Noise 21
- Social Surveys 21
- Discussion 21

SUMMARY 24

MISUSES, MISUNDERSTANDINGS, AND QUESTIONS 24

INTRODUCTION

During the last 20 years there has been increasing concern with the quality of the environment. Along with air and water contaminants, noise has been recognized as a serious pollutant. As noise levels have risen, the effects of noise have become pervasive and more apparent.

Noise is defined as "unwanted sound." In the context of protecting the public health and welfare, noise implies adverse effects on people and the environment. Noise causes hearing loss, interferes with human activities at home and work, and is in various ways injurious to people's health and well-being. Although hearing loss is the most clearly measurable health hazard, noise is also linked to other physiological and psychological problems.

Noise annoys, awakens, angers and frustrates people. It disrupts communication and individual thoughts, and affects performance capability. Noise is one of the biological stressors associated with everyday life. Thus, the numerous effects of noise combine to detract from the quality of people's lives and the environment.

Noise emanates from many different sources. Transportation noise, industrial noise, construction noise, household noise, and people and animal noise are all large-scale offenders. It is important, then, to examine the total range and combination of noise sources and not to focus unduly on any one source.

Through the Noise Control Act of 1972, Congress directed the Environmental Protection Agency (EPA) to publish scientific information about the kind and extent of all identifiable effects of different qualities and quantities of noise. EPA was also directed to define acceptable levels under various conditions which would protect public health and welfare with an adequate margin of safety. The EPA collaborated with other Federal agencies and the scientific community to publish a "Levels Document,"* which would fulfill these requirements in the Noise Control Act.

Initial public reaction was quite favorable, but it was discovered that the document was too complex, too technical, and too long for some audiences. This summary presents the contents of the Levels Document in less technical terms. It defines the basic measurement of noise, analyzes noise exposure, and presents the best understood effects of noise — hearing damage, speech interference, and annoyance — using information contained in the Levels Document. The identified protective levels are then summarized, followed by a number of often-asked questions and answers about the Levels Document.

No attempt has been made here to incorporate recent research findings pertaining to effects of noise on people. Considerable new information has developed since initial publication of the Levels Document, including new findings on community response to noise, sleep disruption, and speech interference. Summaries and analyses of some recent information on noise effects are available through EPA and other agencies.

---

* "Information on Levels of Environmental Noise Requisite to Protect Public Health and Welfare with an Adequate Margin of Safety", EPA 550/9-74-004, March, 1974, U.S. Environmental Protection Agency, Washington, D.C. 20460.

ABOUT SOUND

The sound we hear is the result of a sound source inducing vibration in the air. The vibration produces alternating band of relatively dense and sparse particles of air, spreading outward from the source in the same way as ripples do on water after a stone is thrown into it. The result of the movement of the particles is a fluctuation in the normal atmospheric pressure, or sound waves. These waves radiate in all directions from the source and may be reflected and scattered or, like other wave actions, may turn corners. When the source stops vibrating, the sound waves disappear almost instantaneously, and the sound ceases. The ear is extremely sensitive to sound pressure fluctuations, which are converted into auditory sensations.

Sound may be described in terms of three variables:

1. Amplitude (perceived as loudness)
2. Frequency (perceived as pitch)
3. Time pattern

Amplitude

Sound pressure is the amplitude or measure of the difference between atmospheric pressure (with no sound present) and the total pressure (with sound present). Although there are other measures of sound amplitude, sound pressure is the fundamental measure and is the basic ingredient of the various measurement descriptors in the next section, "Measurement of Environmental Noise."

The unit of sound pressure is the decibel (dB); thus it is said that a sound pressure level is a certain number of decibels. The decibel scale is a logarithmic scale, not a linear one such as the scale of length. A logarithmic scale is used because the range of sound intensities is so great that it is convenient to compress the scale to encompass all the sounds that need to be measured. The human ear has an extremely wide range of response to sound amplitude. Sharply painful sound is 10 million times greater in sound pressure than the least audible sound. In decibels, this 10 million to 1 ratio is simplified logarithmically to 140 dB.

Another unusual property of the decibel scale is that the sound pressure levels of two separate sounds are not directly (that is, arithmetically) additive. For example, if a sound of 70 dB is added to another sound of 70 dB, the total is only a 3-decibel increase (to 73 dB), not a doubling to 140 dB. Furthermore, if two sounds are of different levels, the lower level adds less to the higher as this difference increases. If the difference is as much as 10 dB, the lower level adds almost nothing to the higher level. In other words, adding a 60 decibel sound to a 70 decibel sound only increases the total sound pressure level less than one-half decibel.

Frequency

The rate at which a sound source vibrates, or makes the air vibrate, determines frequency. The unit of time is usually one second and the term "Hertz" (after an early investigator of the physics of sound) is used to designate the number of cycles per second.

The human ear and that of most animals has a wide range of response. Humans can identify sounds with frequencies from about 16 Hz (Hertz) to 20,000 Hz. Because pure tones are relatively rare in real-life situations, most sounds consist instead of a complex mixture of many frequencies.

Time Pattern

The temporal nature of sound may be described in terms of its pattern of time and level: continuity, fluctuation, impulsiveness, intermittency. Continuous sounds are those produced for relatively long periods at a constant level, such as the noise of a waterfall. Intermittent sounds are those which are produced for short periods, such as the ringing of a telephone or aircraft take-offs and landings. Impulse noises are sounds which are produced in an extremely short span of time, such as a pistol shot or a hand clap. Fluctuating sounds vary in level over time, such as the loudness of traffic sounds at a busy intersection.

MEASUREMENT OF ENVIRONMENTAL NOISE: SOUND DESCRIPTORS

EPA has adopted a system of four "sound descriptors" to summarize how people hear sound and to determine the impact of environmental noise on public health and welfare. These four descriptors are: the A-weighted Sound Level, A-weighted Sound Exposure Level, Equivalent Sound Level, and Day-Night

Sound Level. They are related but each is most useful for a particular type of measurement. The descriptors and some examples of their uses are described below.

A-weighted Sound Level

One's ability to hear a sound depends greatly on the frequency composition of the sound. People hear sounds most readily when the predominant sound energy occurs at frequencies between 1000 and 6000 Hertz (cycles per second). Sounds at frequencies above 10,000 Hertz (such as high-pitched hissing) are much more difficult to hear, as are sounds at frequencies below about 100 Hz (such as a low rumble). To measure sound on a scale that approximates the way it is heard by people, more weight must be given to the frequencies that people hear more easily.

A method for weighting the frequency spectrum to mimic the human ear has been sought for years. Many different scales of sound measurement, including A-weighted sound level (and also B, C, D, and E-weighted sound levels) have evolved in this search. A-weighting was recommended by EPA to describe environmental noise because it is convenient to use, accurate for most purposes, and is used extensively throughout the world. Figure 1 shows the A-weighted levels of some environmental noises. Note that these ranges of measured values are the maximum sound levels.

The A-weighting of frequency also is used in the three descriptors discussed below. When used by itself, an A-weighted decibel value denotes either a sound level at a given instant, a maximum level, or a steady-state level. The following three descriptors are used to summarize those levels which vary over time.

Sound Exposure Level

Since the levels of many sounds change from moment to moment, this variation must also be accounted for when measuring environmental noise. One method for measuring the changing magnitude of sound levels is to trace a line on a sheet of moving paper, so that the movement of the pen is proportional to the sound level in decibels. Figure 2 illustrates such a recording, about which several features are noteworthy. First, the sound level varies with time over a range of about 30 dB. Second, the sound appears to be characterized by a fairly steady-state lower level, upon which are superimposed sound levels associated with individual events. This fairly constant lower level is often called the background ambient sound level.

Each single event in Figure 2 may be partially characterized by its maximum level. It may also be partially characterized by its time pattern. In the example, the sound level of the aircraft is above that of the background ambient level for about a minute, whereas the sound levels from cars are above the background level for much less time.

The duration of sounds with levels that vary from moment to moment is more difficult to characterize. One way is to combine the maximum sound level with the length of time during which the sound level is greater than a certain number of decibels below the maximum level — for example, the number of seconds that the sound rises from 10 dB below maximum, as in Figure 3.

Using this procedure one can measure the total energy of the sound by summing the intensity during the exposure duration. This procedure produces the second measurement descriptor, *sound exposure level* (L_s), referred to in the Levels Document as the single event noise exposure level (SENEL).

Equivalent Sound Level

Yet another method of quantifying the noise environment is to determine the value of a steady-state sound which has the same A-weighted sound energy as that contained in the time-varying sound. This is the third measurement descriptor, termed the *Equivalent Sound Level* (L_{eq}). The Equivalent Sound Level is a single value of sound level for any desired duration, which includes *all* of the time-varying sound energy in the measurement period. In Figure 2, for example, the L_{eq} equals about 58 dB, indicating that the amount of sound energy in all the peaks and valleys in the figure is equivalent to the energy in a continuous sound of 58 dB.

The major virtue of the Equivalent Sound Level is that it correlates reasonably well with the effects of noise on people, even for wide variations in environmental sound levels and time patterns. It is used when only the durations and levels of sound, and not their times of occurrence (day or night), are relevant. It is easily measurable by available equipment. It also is the basis of a fourth and final measurement descriptor of the total outdoor noise environment, the *Day-Night Sound Level* (L_{dn}).

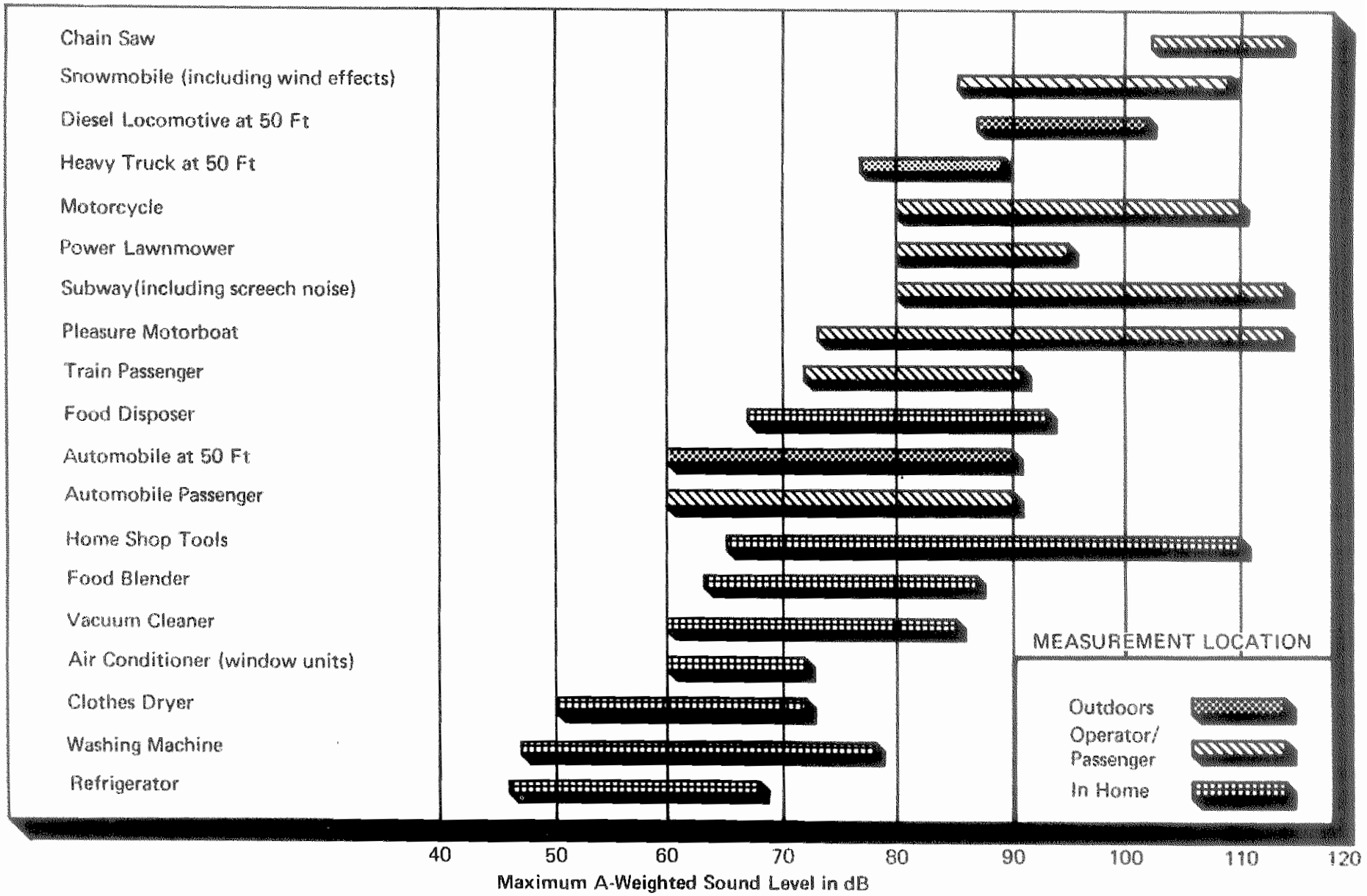

FIGURE 1. TYPICAL RANGE OF COMMON SOUNDS

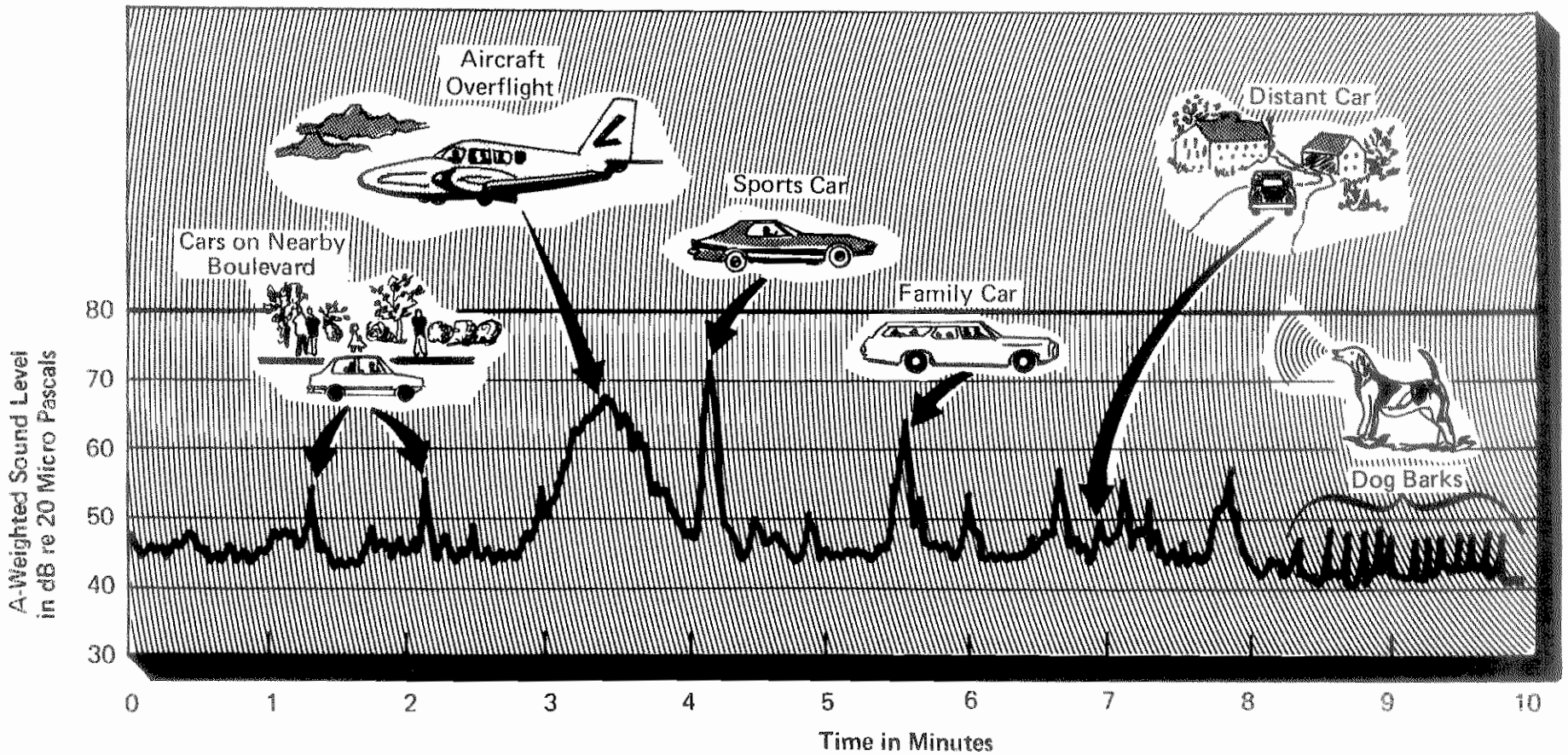

FIGURE 2. TYPICAL OUTDOOR SOUND MEASURED ON A QUIET SUBURBAN STREET

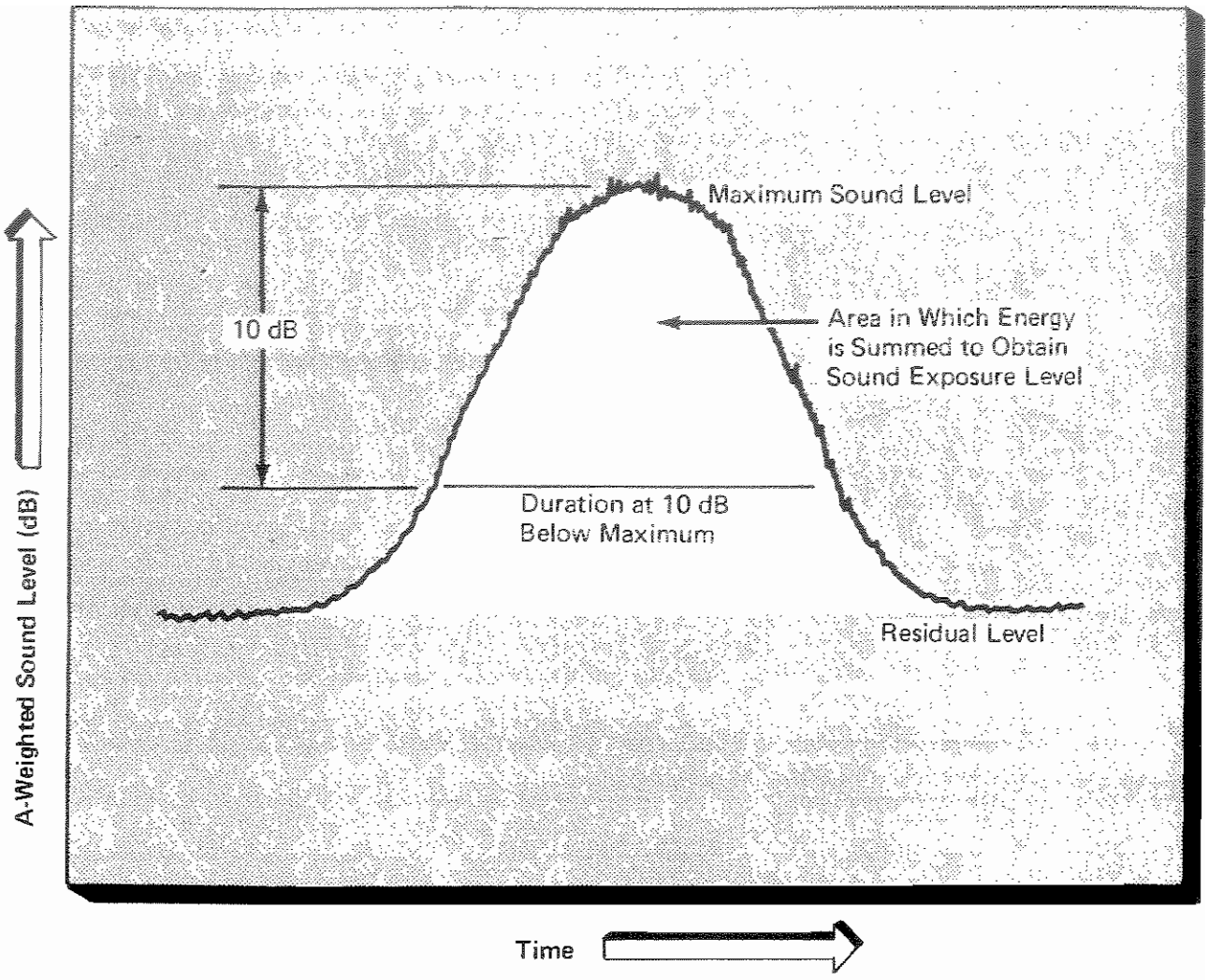

FIGURE 3. DESCRIPTION OF THE SOUND OF A SINGLE EVENT

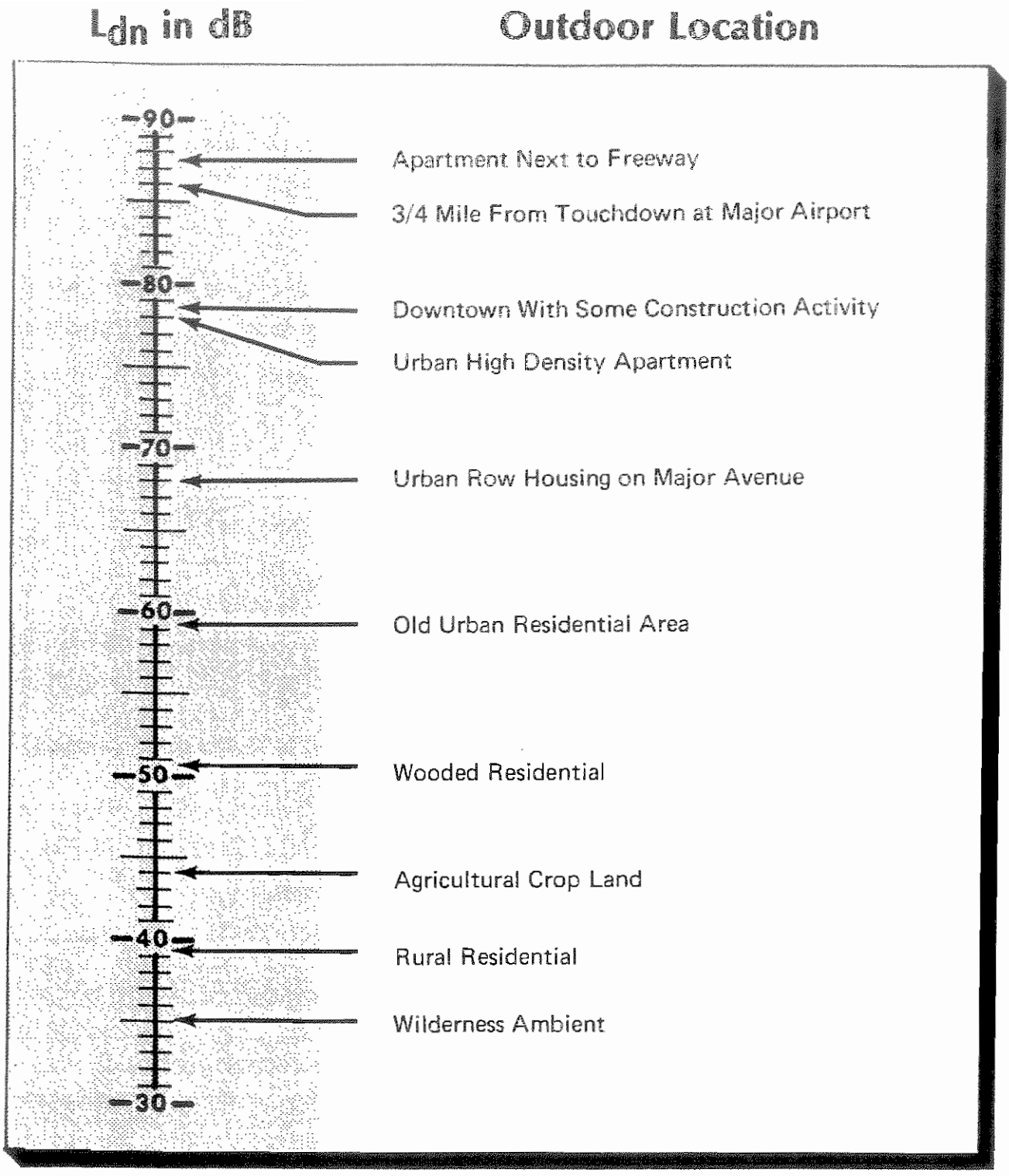

FIGURE 4. EXAMPLES OF OUTDOOR DAY-NIGHT AVERAGE SOUND LEVELS IN dB MEASURED AT VARIOUS LOCATIONS

Day-Night Sound Level

The Day-Night Sound Level is the A-weighted equivalent sound level for a 24-hour period with an additional 10 dB weighting imposed on the equivalent sound levels occurring during nighttime hours (10 pm to 7 am). Hence, an environment that has a measured daytime equivalent sound level of 60 dB and a measured nighttime equivalent sound level of 50 dB, can be said to have a weighted nighttime sound level of 60 dB (50 + 10) and an L_{dn} of 60 dB. Examples of measured L_{dn} values are shown in Figure 4. Table I summarizes the use of the four sound descriptors used by EPA.

Table I. Descriptors of Sound*

TYPICAL USE	NAME OF DESCRIPTOR	NATURE OF DESCRIPTOR
To describe steady airconditioning sound in a room or measure maximum sound level during a vehicle passby with a simple sound level meter.	A-weighted Sound Level	The momentary magnitude of sound weighted to approximate the ear's frequency sensitivity.
To describe noise from a moving source such as an airplane, train, or truck.	A-weighted Sound Exposure Level	A summation of the energy of the momentary magnitudes of sound associated with a single event to measure the total sound energy of the event.
To measure average environmental noise levels to which people are exposed.	Equivalent Sound Level	The A-weighted sound level that is "equivalent" to an actual time varying sound level, in the sense that it has the same total energy for the duration of the sound.
To characterize average sound levels in residential areas throughout the day and night.	Day-Night Sound Level	The A-weighted equivalent sound level for a 24-hour period with 10 decibels added to nighttime sounds (10 pm - 7 am).

*The unit for all descriptors is the decibel.

LEVELS OF ENVIRONMENTAL NOISE IN THE UNITED STATES

In residential areas of the United States, major contributions to outdoor noise come from transportation, industrial, construction, human and animal sources. Inside homes, appliances, radio and television, as well as people and animals, are predominant noise sources. On the job, workplace equipment can create moderate to extremely high levels of noise. The daily noise exposure of people depends on how much time they spend in different outdoor and indoor locations and on the noise environments in these places. Typical daily exposure patterns are discussed in this section, following short descriptions of outdoor and indoor levels of environmental noise throughout the United States.

Outdoor Levels

The noise environment outside residences in the United States can be highly variable. As seen in Figure 4, outdoor Day-Night Sound Levels in different areas vary over a range of 50 dB. Levels occur as low as L_{dn} = 30 to 40 dB in wilderness areas and as high as L_{dn} = 85 to 90 dB in urban areas.

Most Americans live in areas with a much smaller ranger of outdoor noise levels. Figure 5 shows that for urban dwellers (roughly 135 million people, more than half the U.S. population), 87% live in areas of L_{dn} = 48 and higher from traffic noise alone. Most of the other 13% of the urban population experience lower noise levels than those of Figure 5. Figure 5 also shows that nearly half of the urban population live in areas exposed to traffic sounds that range over only 5 dB (L_{dn} = 55 to 60 dB). Rural populations enjoy average outdoor sound levels generally lower than L_{dn} = 50 dB.

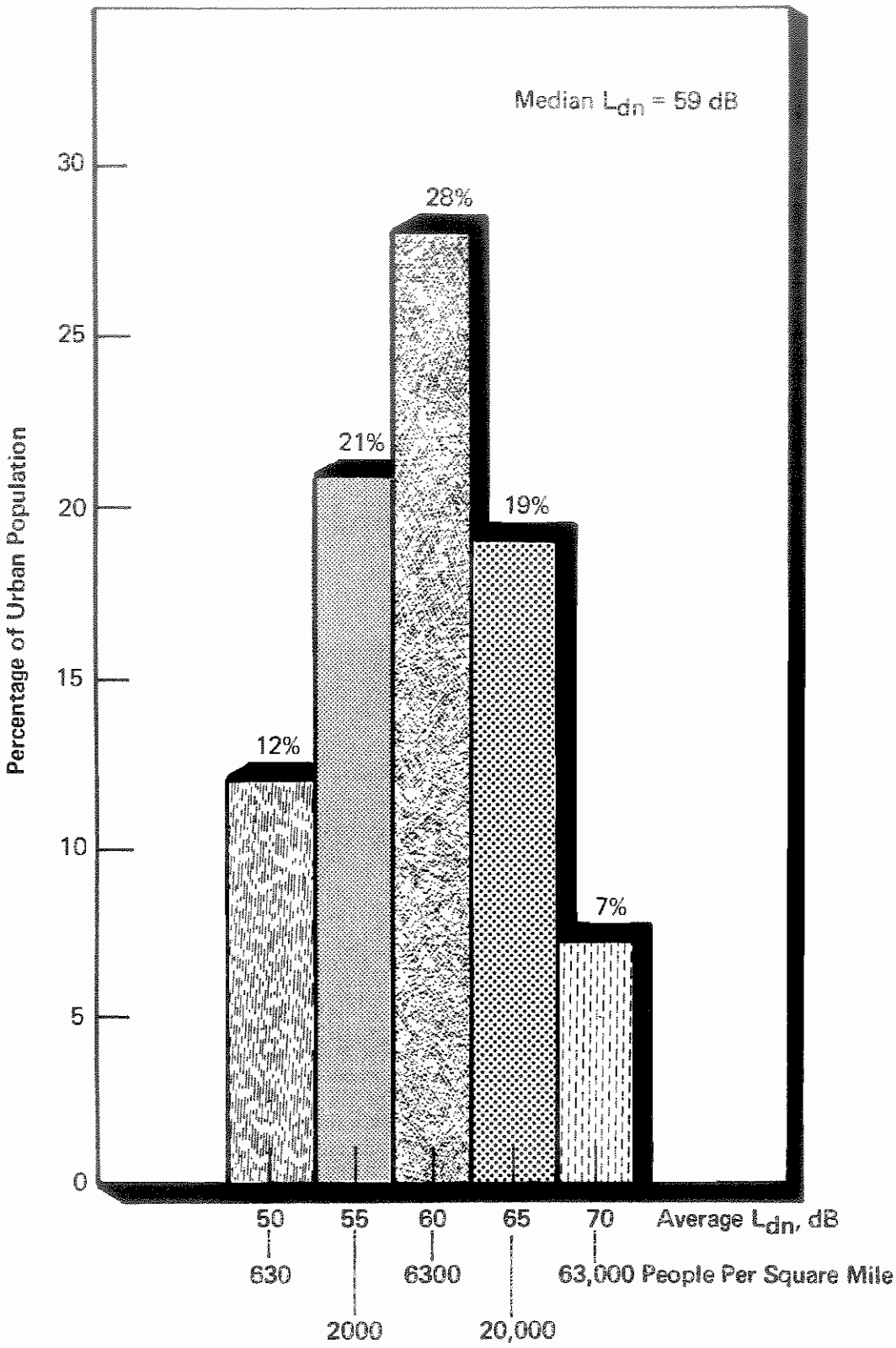

FIGURE 5. ESTIMATED PERCENTAGE OF URBAN POPULATION EXPOSED TO OUTDOOR DAY-NIGHT SOUND LEVELS DUE TO TRAFFIC

It is useful to know the number of people living in areas characterized by different levels of environmental noise. Figure 6 presents estimates for urban traffic, freeway traffic, and aircraft noise. The figure shows that urban traffic noise is much more widespread than either aircraft or freeway noise, but the figures are not strictly additive, because many of the people counted in one category are also exposed to another category of noise. Fifty-nine million people live in areas with urban traffic noise of L_{dn} = 60 dB or higher, in contrast to only 16 million and 3.1 million people who live in areas with outdoor levels of L_{dn} = 60 dB or higher for aircraft and freeway noise, respectively. On the other hand, more people are exposed to higher levels of noise from freeway and aircraft operations than from urban traffic: about 300,000 people live in areas exposed to levels of L_{dn} = 80 dB or higher from freeway traffic; 200,000 from aircraft operations; and 100,000 from urban traffic. Bear in mind, however, that there may be differences between individual at-ear exposure levels and outdoor levels, because people move from place to place for varying amounts of time.

Relationship Between Indoor and Outdoor Levels

The contribution of outdoor noise to indoor noise levels is usually small. That part of a sound level within a building caused by an outdoor source obviously depends on the source's intensity and the sound level reduction afforded by the building. Although the sound level reduction provided by different buildings differs greatly, dwellings can be categorized into two broad classes—those built in warm climates and those built in cold climates. Further, the sound level reduction of a building is largely determined by whether its windows are open or closed. Table II shows typical sound level reductions for these categories of buildings and window conditions, as well as an approximate national average sound level reduction.

Table II
Typical Sound Level Reductions of Buildings

	Windows Opened	**Windows Closed**
Warm Climate	12 dB	24 dB
Cold Climate	17 dB	27 dB
Approximate National Average	15 dB	25 dB

Sample measurements of outdoor and indoor noise levels during 24-hour periods are depicted in Figure 7. Despite the sound level reduction of buildings, indoor levels are often comparable to or higher than levels measured outside. Thus, indoor levels often are influenced primarily by internal noise sources such as appliances, radio and television, heating and ventilating equipment, and people. However, many outdoor noises may still annoy people in their homes more than indoor noises do. Indeed, people sometimes turn on indoor sources to mask the noise coming from outdoors.

An example of the range of hourly sound levels measured inside living areas in plotted for each hour of the day in Figure 8. The figure shows the median levels and the range of levels observed for 80% of the data. During late night hours the typical hourly sound level was approximately 36 dB. This level was probably dominated by outdoor noise. However, during the day, the hourly average levels ranged from about 40 to 70 dB, indicating the wide range of activities in which people engage.

INDIVIDUAL NOISE EXPOSURE PATTERNS

During a 24-hour period, people are exposed to a wide range of noises, including noise at home, work, school, places of recreation, shopping establishments, and while enroute to these or other locations. Clearly, no single exposure pattern can be typical of all people, or even of those people who follow a common life style. Figure 9 shows hypothetical exposure patterns for broad classes of people. From these levels and some assumptions about the hours spent at different daytime activities, 24-hour average sound levels can be estimated for factory and office workers, housewives, and preschool and school-age children. Estimates based on these assumptions are found in Table III.

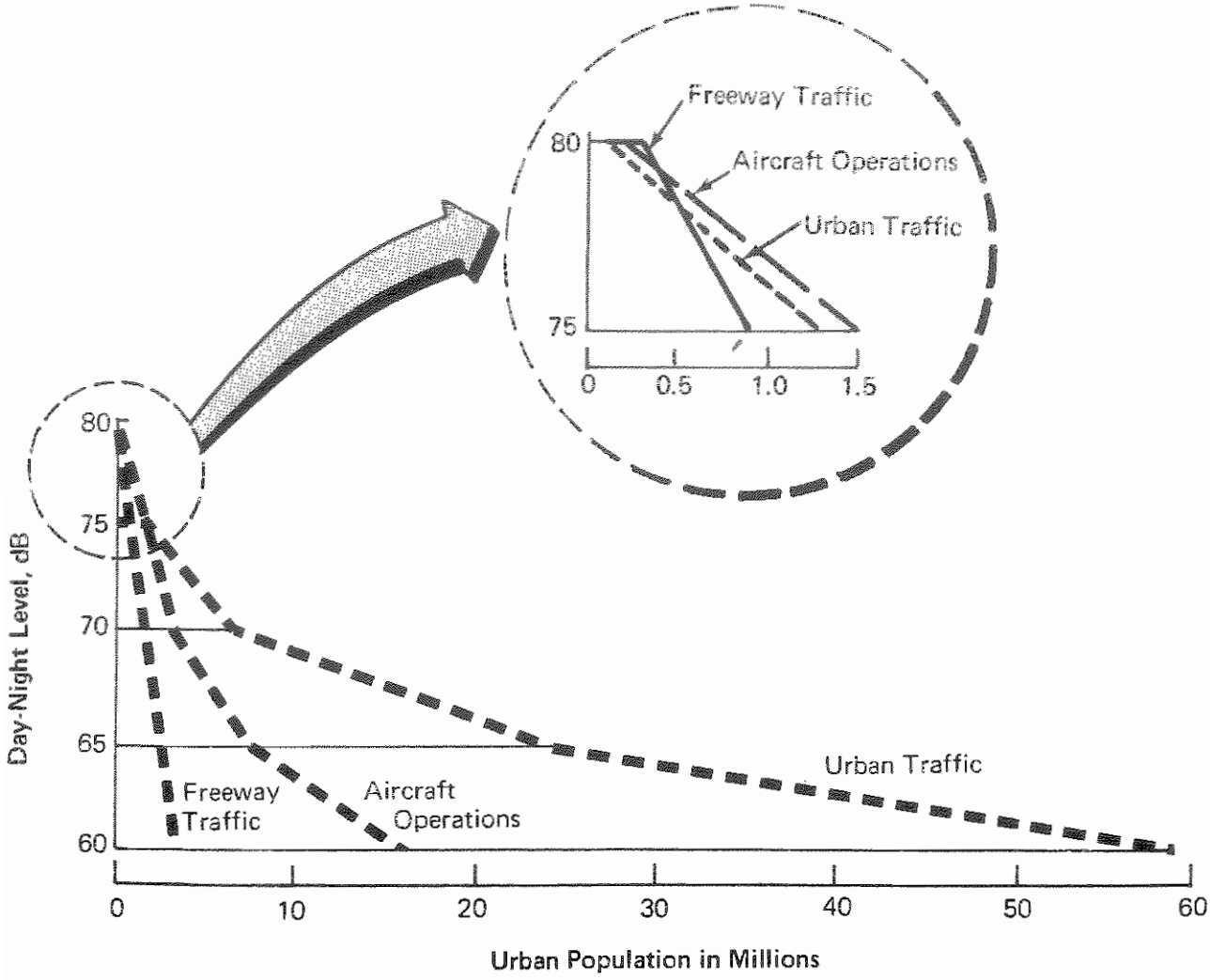

FIGURE 6. CUMULATIVE NUMBER OF PEOPLE IN URBAN AREAS EXPOSED TO OUTDOOR DAY-NIGHT AVERAGE SOUND LEVELS FROM DIFFERENT SOURCES

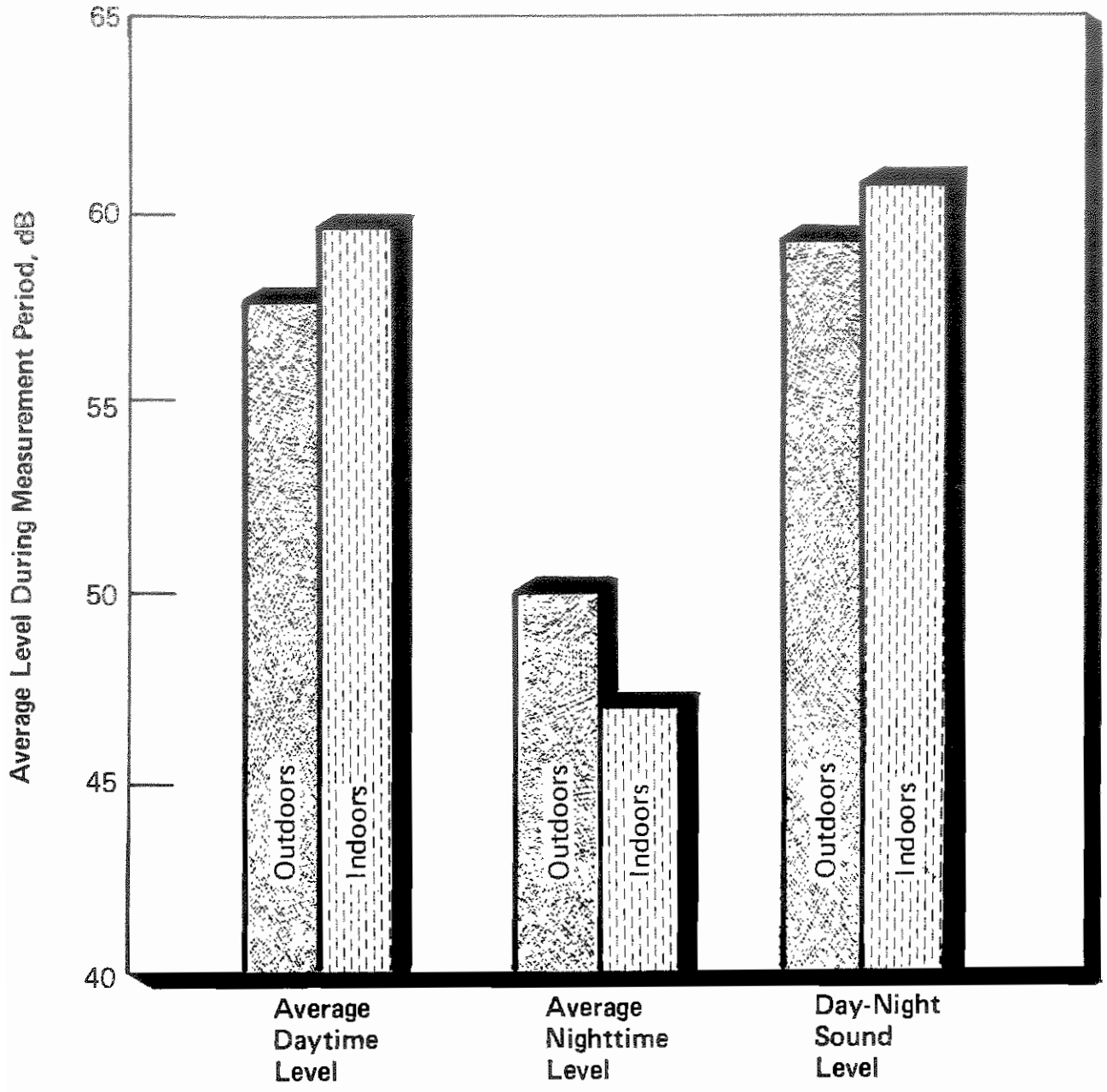

FIGURE 7. COMPARISON OF SAMPLE OUTDOOR AND INDOOR AVERAGE RESIDENTIAL SOUND LEVELS

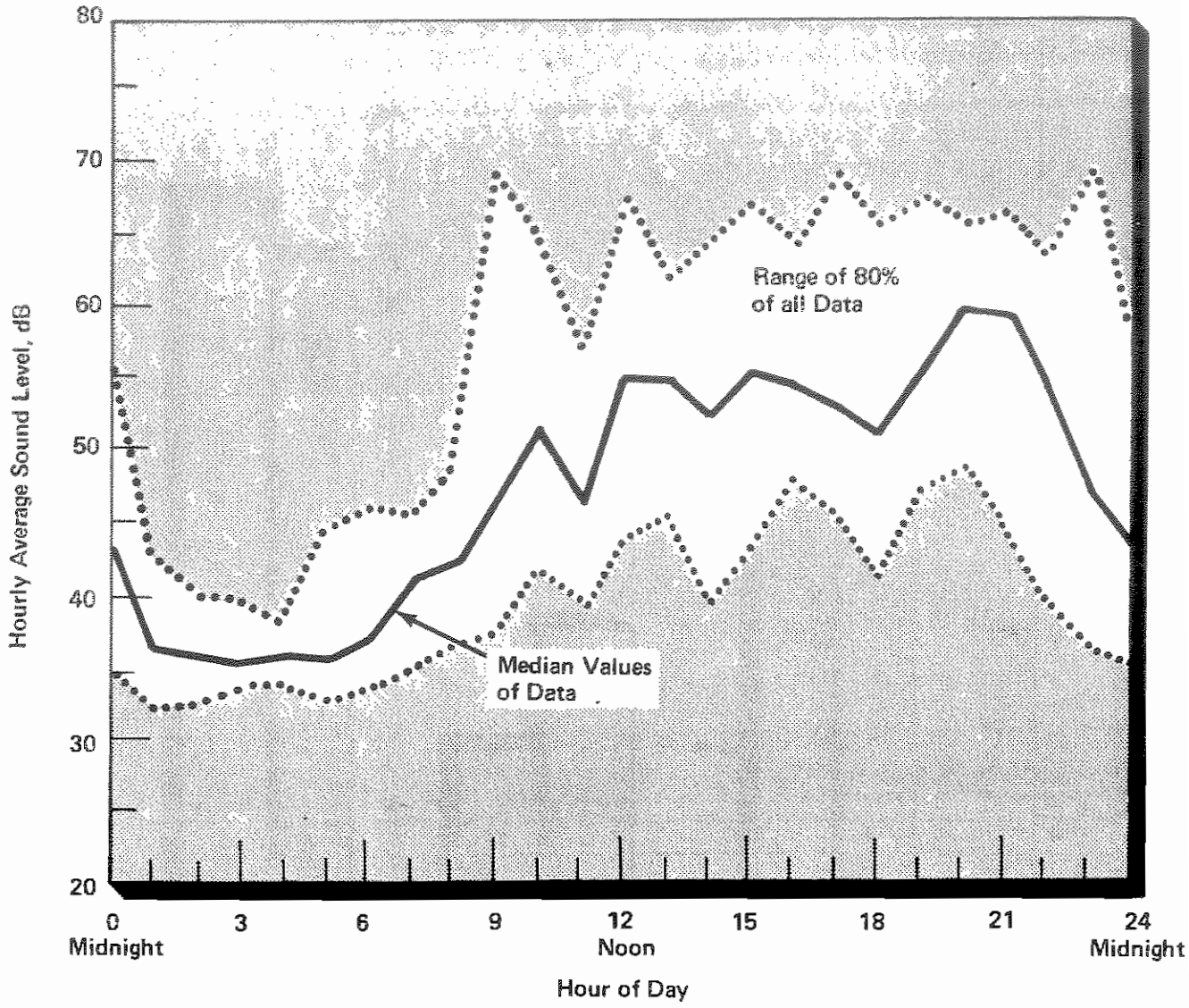

FIGURE 8. TIME PATTERN OF HOURLY INDOOR RESIDENTIAL SOUND LEVELS

For most people, nighttime noises do not contribute significantly to the 24-hour average. For many, the 24-hour average is determined primarily by the noise exposure of a single activity, frequently occurring for a short period of time.

Table III
Hypothetical Examples of Noise Exposures of Individuals

	24-Hour Average Sound Level, dB	
Individual	**Suburban Environment**	**Urban Environment**
Factory Worker	87	87
Office Worker	72	70
Housewife	64	67
School Child	77	77

HEARING DAMAGE FROM ENVIRONMENTAL NOISE

There is no question that exposure to certain levels of noise can damage hearing. However, determining exposure levels that protect hearing with an adequate margin of safety is a complicated matter.

This is because hearing is a complex ability that cannot be summarized by a single number in the way an individual's height or weight can be described. In fact, sizeable differences exist between individuals' hearing abilities. Hearing acuity tends to change progressively with age. Also, environmental noise exposure may vary considerably from moment to moment, so that specification of protective levels should include dynamic considerations. Further, relationships between hearing damage and noise exposure must be inferred, since available scientific information was gathered from groups of people who differed not only in noise exposure, but also in other important ways. Finally, individual and group noise exposures (especially over a working lifetime) are rarely known with precision.

In reaching conclusions about hearing loss, then, one must rely to a degree on assumptions, hypotheses, and extrapolations from existing data. Since complete agreement within the scientific community on these matters is lacking, an attempt was made in the Levels Document to consider alternative assumptions and hypotheses to ensure that the methods used to derive protective levels were based on the most defensible practice. As new data become available these levels may change slightly.

Basic Premises Involved in Determining Protective Levels

1. Changes in ability to hear in the region of 4000 Hz are the most important signs of irreversible hearing loss, indicating actual physiological destruction within the hearing mechanism. This frequency is usually the first frequency affected when the ear is damaged by exposure to noise. Furthermore, the protection of hearing acuity at this frequency is critical for understanding of speech and appreciation of music and other sounds.
2. Changes in individual hearing level, like changes in height or weight, are only significant if they are sizeable. Changes smaller than 5 dB are considered insignificant.
3. At all ages, it is assumed that hearing acuity cannot be damaged by sounds that cannot be heard. This may be important in that aging and other causes may produce appreciable shifts in hearing.
4. Because hearing ability varies from person to person, recommendations must be made in terms of a critical percentage of the population, ranked with superior hearing over the remainder. EPA's recommendations were based on the 96th percentile—that is, on providing protection for 96% of the people. It is assumed that people with poorer hearing than the 96th percentile are not affected by noise of typical levels (see 3 above), so that the recommendations protect virtually the entire population.
5. An individual's total noise exposure is evaluated by an "equal energy" rule: two noise exposures are expected to produce equal hearing loss if the product of exposure intensity and exposure time are equal. This rule allows a 3-dB decrease in sound pressure level (expressed in dB) for each doubling of the duration. Thus an exposure of 76 dB for one hour is equivalent to 73 dB for two hours, or 70 dB for four hours. This procedure is probably accurate for exposures of 30 minutes or more. It is also more protective for very short exposures and for noise that fluctuates greatly in level.

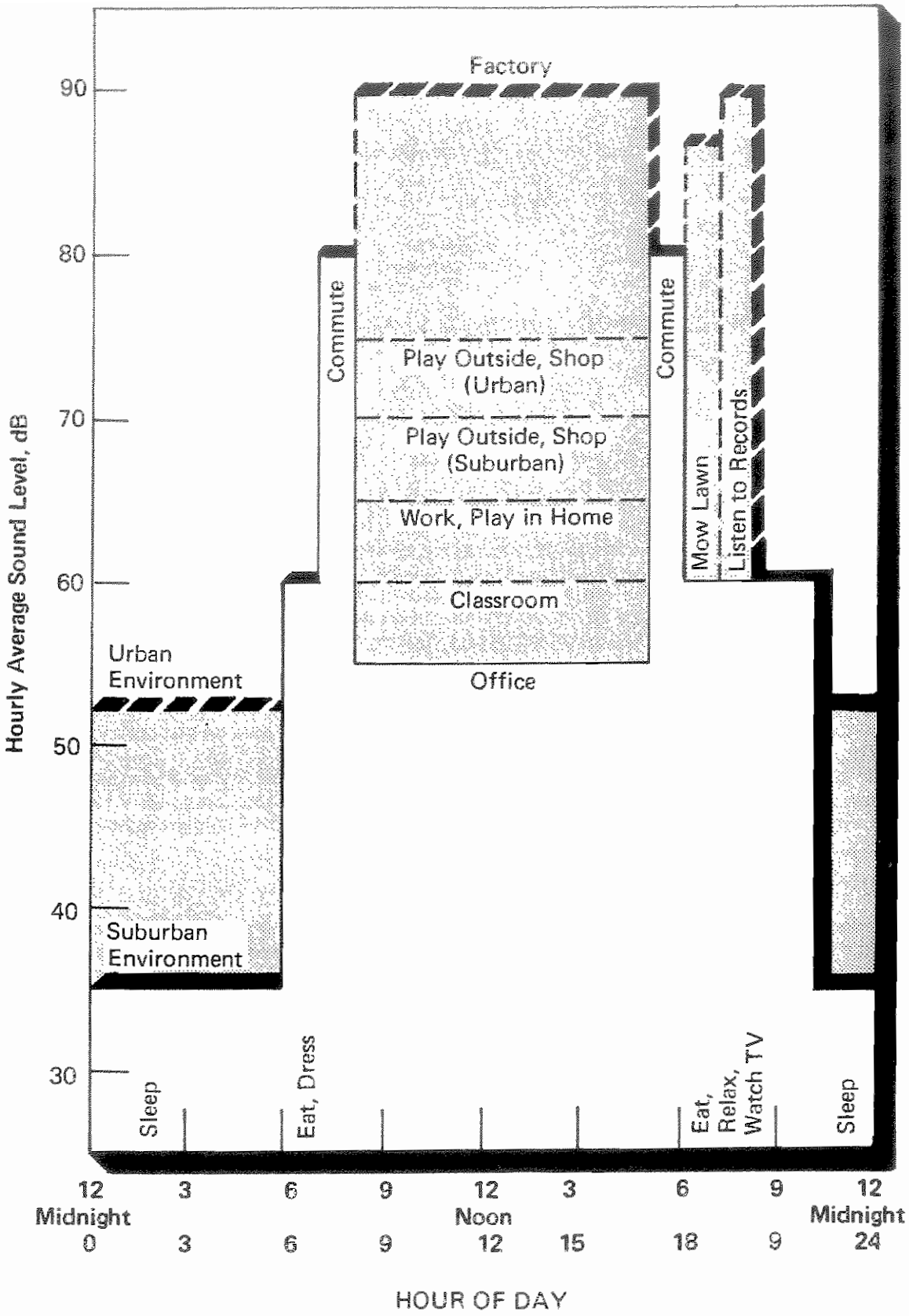

FIGURE 9. GENERALIZED INDIVIDUAL NOISE EXPOSURE PATTERNS

6. Intermittent noise produces less hearing damage than the "equal energy" rule would predict. To be considered intermittent for this purpose, a noise must fall below 65 dB for 10% of each hour and have peaks that exceed the background level by 5 to 15 dB. Intermittent noise is assumed to produce 5 dB less effect than does continuous noise of the same average level.

Calculation of the Maximum Allowable Noise Exposure

Three major scientific studies have attempted to assess hearing damage for various noise exposures. All are based on a comparison of groups of noise-exposed people and comparable non-exposed groups. All three studies attempted to predict hearing loss as a function of noise exposure of a certain percentage of people. Because these studies were of exposure to high-level noise, extrapolations of the data were necessary to estimate the protective exposure level that would produce minimal hearing loss: less than 5 dB at 4000 Hz for 96% of the people.

Forty years of exposure (250 working days per year) to a noise level of 73 dB for 8 hours per day was calculated to produce a hearing loss smaller than 5 dB for 96% of the people. This is the basic datum used to calculate hearing-protective levels of noise exposure. To use it in specific situations, certain corrections must be applied. One correction is to determine the yearly (rather than working day) level (250 to 365 days). This consideration amounts to a reduction 1.6 dB. Another correction, based on exposure on a 24-hour rather than 8-hour basis, produces an additional reduction of 5 dB.

Table IV contains at-ear noise exposure levels that produce negligible hearing losses for both 8-hour and 24-hour exposure on a yearly and working day basis. The 8-hour calculation assumes the remaining 16 hours of the day are spent in relative quiet.

Since an individual often experiences intense noise exposure outside of working hours (for example, while using noisy appliances or pursuing noisy recreation), protection on a 24-hour basis 365 days per year requires exposure of an intermittent variety at an equivalent level of less than 71.4 dB. This value is rounded to 70 dB to provide a slight margin of safety. Exposure to greater levels would produce more than 5 dB hearing loss in at least some of the population.

Table IV
(At-Ear) Exposure Levels that Produce No More Than
5 dB Noise-Induced Hearing Damage Over a 40-Year Period

		Steady (Continuous) Noise	Intermittent Noise	With Margin of Safety
L_{eq}, 8 hour	250 day/year	73	78	
	365 day/year	71.4	76.4	75
L_{eq}, 24 hour	250 day/year	68	73	
	365 day/year	66.4	71.4	70

Discussion of Assumptions

Several assumptions have been made in calculating the 24-hour yearly hearing-protective level of 70 dB. It is reasonable to ask how alternative assumptions would affect this level, and what the range of error might be.

Q. How would the recommended level be affected by a change in the percentage of the population protected?

A. Reducing the 96th percentile value to the 50th percentile (i.e., protecting half the population) would increase the protective level value from 70 dB to 77 dB.

Q. Since agreement on the value of the intermittency correction is imperfect, what other values might be used?

A. The estimated intermittency correction used in the Levels Document is 5 dB. The true intermittency correction is probably within the range 0 to 15 dB.

Q. How accurate is the equal energy assumption?

A. The equal energy assumption when applied to the long times (8 hours to 24, or 250 to 365 days) is fairly accurate. It may be subject to error when applied to short exposures of extreme level.

Q. How meaningful are the basic studies of hearing damage risk?

A. The probable errors of estimates in the three basic studies cannot be stated with absolute accuracy. There are a number of problems in extrapolating percentages of the population damaged from relatively high exposure levels to the protective level. Also, there is the problem of determining the amount of hearing damage when the control (non-exposed) population is subject to high levels of non-occupational noise. Thus, the 70 dB protective level is simply the best present estimate, subject to change if better data become available.

SPEECH COMMUNICATION

Communication is an essential element of human society, and speech is its most convenient form of expression. Interference with speech can degrade living directly, by disturbing normal social and work-related activities, and indirectly, by causing annoyance and stress. Sometimes the communications disturbed by noise are of vital importance, such as warning signals or cries for assistance. Prolonged speech interference and resulting annoyance are clearly not consistent with public health and welfare.

Speech interference from environmental noise can occur at home, at work, during recreation, inside vehicles, and in many other settings. Of chief concern for current purposes are the effects of noise on face-to-face conversations (indoors and outdoors), telephone conversations, and radio or television use.

The degree to which noise disturbs speech depends not only on physical factors (such as noise levels, vocal effort, distances between talkers and listeners, and room acoustics), but also on non-physical factors. The latter include the speaker's enunciation, the familiarity of the listener with the speaker's vocabulary and accent, the topic of conversation, the listener's motivation, and the hearing acuity of the listener. Years of research on speech intelligibility have produced considerable information about how these factors interact. Accurate predictions of speech intelligibility can be based on average noise levels and distances between speakers and listeners.

Speech Interference Indoors

The solid line in Figure 10 shows the effects of steady masking noise on sentence intelligibility for persons with normal hearing in a typical living room. At distances greater than about one meter from the speaker, the level of speech is fairly constant throughout the room.

The highest noise level that permits relaxed conversation with 100% sentence intelligibility throughout the room is 45 dB. People tend to raise their voices when the background noise exceeds 45-50 dB.

Speech Interference Outdoors

The sound level of speech outdoors decreases with increasing distance between speaker and listener. Table V shows distances between speaker and listener for satisfactory outdoor speech intelligibility at two levels of vocal effort in steady background noise levels.

The levels for normal and raised-voice "satisfactory conversation" shown in Table V permit sentence intelligibility of 95% at each distance. Ninety-five percent sentence intelligibility usually permits reliable communication because of the redundancy in normal conversation.

If the noise levels in Table V are exceeded, the speaker and listener must either move closer together or expect reduced intelligibility. For example, consider a conversation at normal vocal effort at a distance of three meters in a steady background noise of 56 dB. If the background level increases to 66 dB, the speakers either will have to move closer (to one meter apart) to maintain the same intelligibility, or alternatively, raise their voices appreciably. If they remain three meters apart without raising their voices, speech intelligibility would drop considerably.

Table V
Steady A-weighted Sound Levels That Allow Communication with
95 Percent Sentence Intelligibility Over Various Distances
Outdoors for Different Voice Levels

VOICE LEVEL	COMMUNICATION DISTANCE (meters)					
	0.5	1	2	3	4	5
Normal Voice (dB)	72	66	60	56	54	52
Raised Voice (dB)	78	72	66	62	60	58

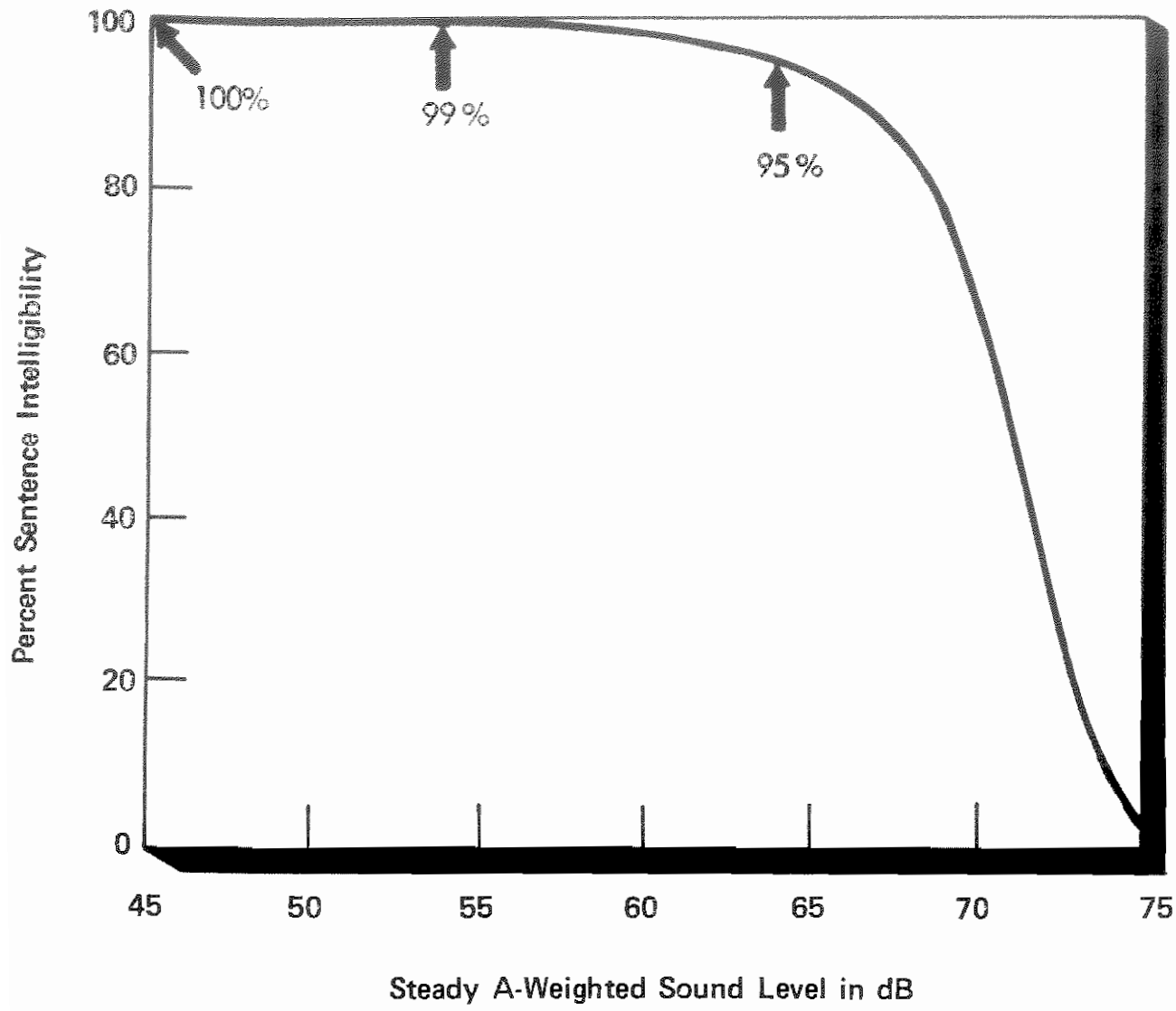

FIGURE 10. INDOOR SENTENCE INTELLIGIBILITY

Discussion

In summary, an L_{dn} of 45 dB permits virtually 100% intelligibility inside buildings. Assuming that a typical home reduces outdoor noise by 15 dB, the outdoor noise level should be no greater than L_{dn} = 60 dB to permit 100% intelligible speech indoors. Allowing a 5 dB margin of safety, the outdoor level should be L_{dn} = 55 dB. This outdoor level would also guarantee sentence intelligibility of 95% outdoors with normal voice levels at a distance of three meters.

Q. What do percentages of sentence intelligibility signify?

A. A given percentage of sentence intelligibility, such as 95% or 99%, indicates the proportion of key words (in a group of sentences) which are correctly heard by normal-hearing listeners.

Q. How are the speech criteria affected by the fact that people tend to raise their voices in noise?

A. The speech criteria are based on the principle that an adequate communication environment does not necessitate raised voices.

Q. How do the identified continuous equivalent levels relate to the fact that, in everyday life, noise fluctuates and is intermittent in nature?

A. The Levels Document tabulated speech interferences for different combinations of levels and durations to test the limits of certain L_{eq} values under intermittent conditions. It is acknowledged that, given equal L_{eq} values, fluctuating noise may reduce less total speech interference than continuous noise on average. On the other hand, during those times when the higher level noises occur, the speech interference will be greater than its average value.

ACTIVITY INTERFERENCE AND ANNOYANCE

Noise interferes with human activities to varying degrees. Intruding noises can interfere with human activities by distracting attention and by making activities more difficult to perform, especially when concentration is needed. Interference from noise can even make some activities (such as communication or sleep) virtually impossible. Except in the case of speech interference, however, the degree of interference is hard to specify and difficult to relate to the level of noise exposure.

Because people's reactions to time-varying noise differ from moment to moment, and because people's reactions differ in general, protective levels for annoyance and activity interference are determined from data collected from groups of people, rather than from individuals. Fortunately, considerable data from social surveys of community reactions to noise exposure are available for this purpose. Although there are some shortcomings in practically all such data, sufficient agreement exists to allow confident predictions of the noise levels that lead to certain degrees of activity interference and annoyance.

Activity Interference

Social surveys most often have been used to assess community reaction to noise exposure around airports. Table VI shows the percentage of people who reported noise interference with activities among a larger group which was extremely disturbed by aircraft noise.

It is hardly surprising that four of the nine activities in Table VI involve listening. Aircraft noise may also be found annoying because it may startle people, cause houses to shake, or elicit fear of a crash.

Another widely studied source of community noise exposure is vehicular traffic. Activity interference produced by traffic noise closely resembles that of aircraft noise, since interference with conversation, radio, television, and telephone use are all high on the list of activities disturbed.

Table VI
Percentage of Those People Who Were Highly Disturbed by Aircraft Noise, by Activity Disturbed

ACTIVITY	PERCENT
TV-Radio Reception	20.6
Conversation	14.5
Telephone	13.8
Relaxing Outside	12.5
Relaxing Inside	10.7
Listening to Records/Tapes	9.1
Sleep	7.7
Reading	6.3
Eating	3.5

Community Reactions to Noise

Two major indices of the cumulative effects of environmental noise on people are (A) specific actions taken by individuals or groups (such as complaints), and (B) responses to social survey questionnaires. Over the last 25 years, numerous studies have been conducted to increase understanding of the relationship between noise exposure and its effects on people in communities.

Several factors beyond the magnitude of exposure have been found to influence community reaction. These factors include:

1. Duration of intruding noises and frequency of occurrence
2. Time of year (windows open or closed)
3. Time of day of noise exposure
4. Outdoor noise level in community when intruding noises are not present
5. History of prior exposure to the noise source
6. Attitude toward the noise source
7. Presence of pure tones or impulses.

Since each of these factors may affect community reactions to noise exposure, adjustments for each have been developed to improve the predictability of community reactions beyond that available from a simple measure of exposure level. Figure 11 shows the results of several different case studies, relating L_{dn} (in dB) to community response with various correction factors added. The addition of the correction factors makes it possible to predict community reaction to within $\pm$ 5 dB. As is common with annoyance and interference caused by noise, the effects of context and situation may be almost as important as the magnitude or intensity of the source. Caution is also needed in applying these relationships to communities that are significantly quieter than average urban areas.

Social Surveys

Extensive social surveys have been conducted around Heathrow Airport near London and at eight major airports in the United States. The relationship found in these surveys between noise exposure levels and the percentage of respondents who were considered annoyed by noise is summarized in Figure 12.

Discussion

Q. Is annoyance simply a "welfare" effect?

A. Annoyance is a reflection of adverse effects which cannot be ascribed solely to "health" or "welfare." "Public health and welfare" in the context of the Noise Control Act is an indivisible term; there are no separate "health" effects or "welfare" effects. "Public health and welfare" includes personal comfort and well-being, and the absence of mental anguish, disturbances and annoyance as well as the absence of clinical symptoms such as hearing loss or demonstrable physiological injury.

Q. What is annoyance due to noise?

A. Noise annoyance may be viewed as any negative subjective reaction to noise on the part of an individual or group. It is not an indication of weakness or inability to cope with stress on the part of the annoyed. More likely it signifies transient (or possibly lasting) stress beyond the control of the conscious individual. This is often expressed on social surveys as the percentage of people who express differing degrees of disturbance or dissatisfaction due to the noisiness of their environments. For the purpose of identifying protective noise levels, annoyance is quantified by using the percentage of people who are annoyed by noise. This is felt to be the best estimate of the average general adverse response of people, and in turn, is viewed as reflecting activity interference and the overall desire for quiet.

Q. Are people annoyed at levels below an L_{dn} of 45 or 55 dB?

A. Individuals, or even groups, may be annoyed by noise at low levels—the dripping faucet or humming flourescent bulb are good examples. Annoyance depends very much on the situation, and on individual differences and noise durations.

Q. What do complaints represent?

A. Complaints are used by officials as an indication that a noise problem exists (although a noise problem may well exist in the absence of specific complaints). However, they do not necessarily represent the magnitude of a noise problem. The number of people who file complaints is only a very small percentage of those who are annoyed.

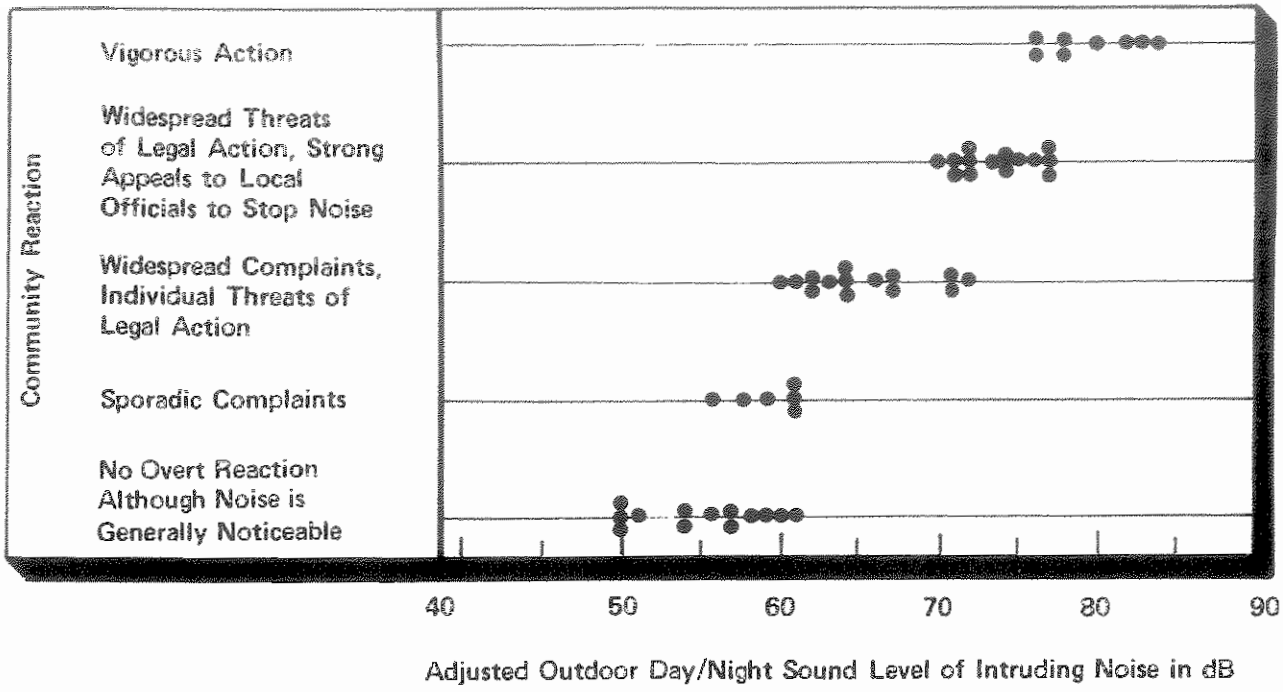

FIGURE 11. COMBINED DATA FROM COMMUNITY CASE STUDIES ADJUSTED FOR CONDITIONS OF EXPOSURE

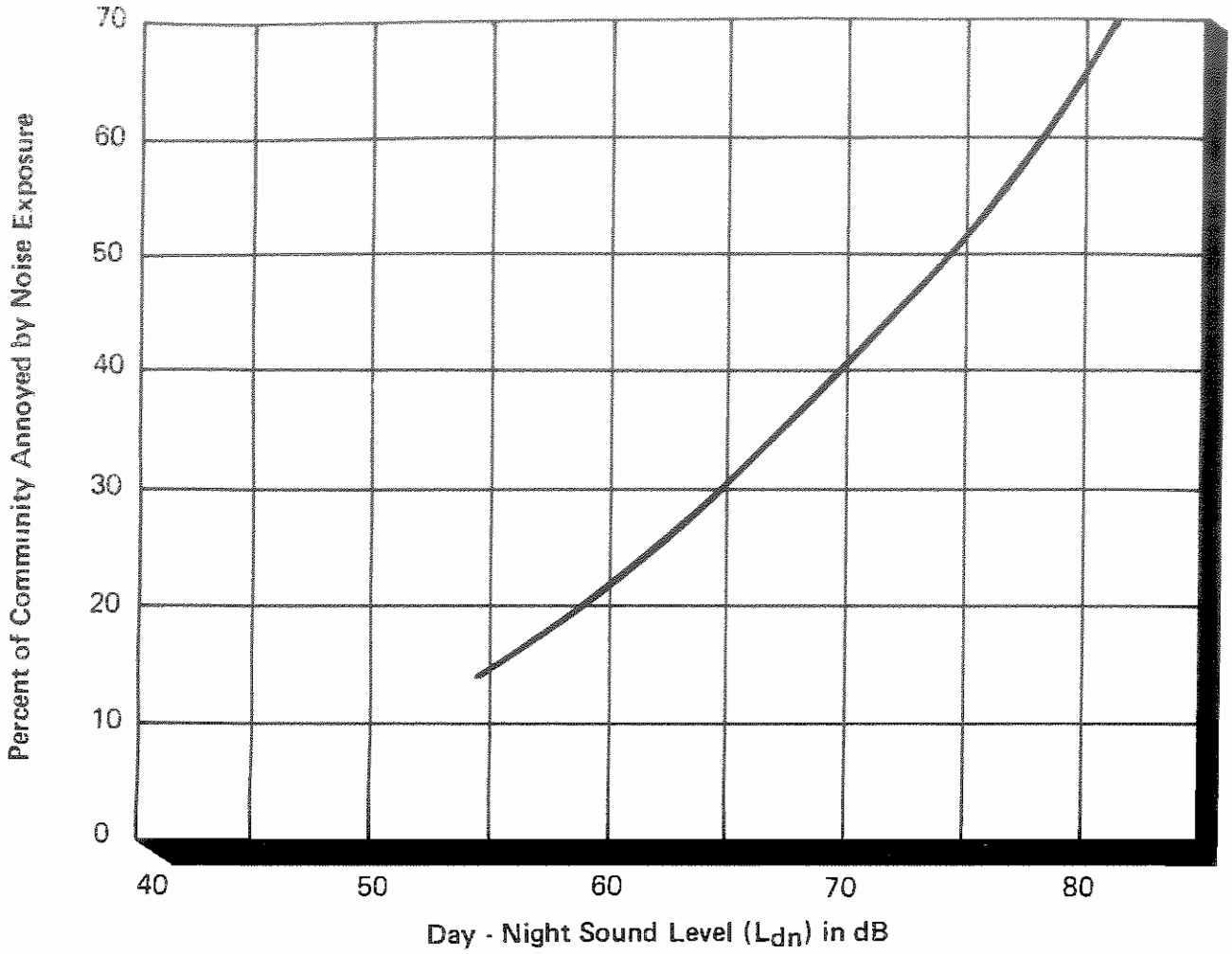

FIGURE 12. PERCENTAGE OF POPULATION ANNOYED BY COMMUNITY NOISE (HEATHROW AIRPORT STUDY)

Q. How is the margin of safety for annoyance applied?

A. The identified indoor level of L_{dn} = 45 incorporates a margin of safety for 100% protection of speech perception which is used as a surrogate for annoyance. The outdoor identified level of 55 L_{dn} protects speech outdoors to a level of 95% intelligibility at up to 2 meters, while incorporating a 5 dB margin of safety for speech, and giving added weight to the range of adverse effects.

Q. Why is the nighttime penalty 10 decibels?

A. The 10 dB nighttime weighting had two bases: first, this weighting value has been applied successfully here and in other countries; secondly, in quiet environments, the natural drop in level from day to night is about 10 dB.

SUMMARY

On the basis of its interpretation of available scientific information, EPA has identified a range of yearly Day-Night Sound Levels sufficient to protect public health and welfare from the effects of environmental noise. It is very important that these noise levels, summarized in Table VIII, not be misconstrued. Since the protective levels were derived without concern for technical or economic feasibility, and contain a margin of safety to insure their protective value, they must not be viewed as standards, criteria, regulations, or goals. Rather, they should be viewed as levels below which there is no reason to suspect that the general population will be at risk from any of the identified effects of noise.

Table VIII
Yearly L_{dn} Values That Protect Public Health and Welfare with a Margin of Safety

EFFECT	LEVEL	AREA
Hearing	$L_{eq(24)} \leq 70$ dB	All areas (at the ear)
Outdoor activity interference and annoyance	$L_{dn} \leq 55$ dB	Outdoors in residential areas and farms and other outdoor areas where people spend widely varying amounts of time and other places in which quiet is a basis for use.
	$L_{eq(24)} \leq 55$ dB	Outdoor areas where people spend limited amounts of time, such as school yards, playgrounds, etc.
Indoor activity interference and annoyance	$L_{dn} \leq 45$ dB	Indoor residential areas
	$L_{eq(24)} \leq 45$ dB	Other indoor areas with human activities such as schools, etc.

Outdoor yearly levels on the L_{dn} scale are sufficient to protect public health and welfare if they do not exceed 55 dB in sensitive areas (residences, schools, and hospitals). Inside buildings, yearly levels on the L_{dn} scale are sufficient to protect public health and welfare if they do not exceed 45 dB. Maintaining 55 L_{dn} outdoors should ensure adequate protection for indoor living. To protect against hearing damage, one's 24-hour noise exposure at the ear should not exceed 70 dB.

MISUSES, MISUNDERSTANDINGS, AND QUESTIONS

Perhaps the most fundamental misuse of the Levels Document is treatment of the identified levels as regulatory goals. They are *not* regulatory goals; they are levels defined by a negotiated scientific consensus. These levels were developed without concern for economic and technological feasibility, are intentionally conservative to protect the most sensitive portion of the American population, and include an additional margin of safety. In short, the levels in Table VIII are neither more nor less than what Congress re-

quired them to be: levels of environmental noise requisite to protect the public health and welfare with an adequate margin of safety.

Q. Why doesn't the Levels Document explicity say how much noise is too much noise?

A. Decisions about how much noise is too much noise for whom, for how long, and under what conditions demand consideration of economic, political, and technological matters far beyond the intent of the Levels Document. Such decisions are properly embodied in formal regulations, not informational publications such as the Levels Document.

Q. How do I use this information for local purposes?

A. This question reflects the need to reconcile local economic and political realities with scientific information. People who formulate local noise abatement programs cannot escape the responsibility of making such economic and political compromises for their constituencies. The Levels Document does not impose arbitrary Federal decisions about the appropriateness of noise environments upon any level of government, nor is it a source of prescriptions for solving local noise problems. It is best viewed as a technical aid to local decision makers who seek to balance scientific information about effects of noise on people with other considerations, such as cost and technical feasibility.

Q. If the identified noise levels are indeed sufficient to protect public health and welfare, shouldn't they be considered to be long-range regulatory goals?

A. Attainment of the identified levels of environmental noise can only be considered idealized goals. Pragmatically, it is unlikely that local, state, or Federal regulatory strategies will seek to attain such levels for all situations in the near future.

Q. Why isn't the Levels Document more definite about specific effects associated with various noise exposure conditions?

A. Available knowledge about the effects of noise would not support more precise statements. Increasingly specific statements will be incorporated in future informational publications as they are justified by increasing knowledge of human response to noise exposure.

TECHNICAL REPORT DATA
(Please read Instructions on the reverse before completing)

1. REPORT NO. EPA 550/9-79-100	2.	3. RECIPIENT'S ACCESSION NO.
4. TITLE AND SUBTITLE Protective Noise Levels Condensed Version of EPA Levels Document		5. REPORT DATE November 1978 6. PERFORMING ORGANIZATION CODE ONAC
7. AUTHOR(S) EPA Office of Scientific Assistant to DAA/Noise		8. PERFORMING ORGANIZATION REPORT NO.
9. PERFORMING ORGANIZATION NAME AND ADDRESS EPA/ONAC		10. PROGRAM ELEMENT NO. 11. CONTRACT/GRANT NO.
12. SPONSORING AGENCY NAME AND ADDRESS Environmental Protection Agency Office of Noise Abatement & Control (ANR-471) 401 M Street, S.W. Washington, D.C. 20460		13. TYPE OF REPORT AND PERIOD COVERED 14. SPONSORING AGENCY CODE EPA/ONAC

15. SUPPLEMENTARY NOTES

16. ABSTRACT

This publication is intended to promote understanding of EPA's findings about levels of environmental noise that protect public health and welfare. It seeks to clarify the proper use of the 1974 "Levels Document" by interpreting its contents in less technical terms. The manual deals with measurement descriptors of environmental noise. Also addressed are the best understood effects of noise on people (hearing damage, speech interference and annoyance). Protective levels are summarized.

17. KEY WORDS AND DOCUMENT ANALYSIS

a. DESCRIPTORS	b. IDENTIFIERS/OPEN ENDED TERMS	c. COSATI Field/Group
Environmental noise levels, indoor and outdoor levels, measurement descriptors, noise exposure patterns, hearing damage, speech interference, annoyance, protective noise exposures		

18. DISTRIBUTION STATEMENT Limited supply available at EPA/ONAC or NTIS, Springfield, VA 22151	19. SECURITY CLASS *(This Report)* Unclassified	21. NO. OF PAGES 25
	20. SECURITY CLASS *(This page)*	22. PRICE

EPA Form 2220-1 (9-73)

APPENDIX D

STATIONARY SOURCE NOISE CALCULATIONS

Church of the Woods

Stationary Source Noise Levels

Southern Play Field

Closest sensitive receptor distance (Leq) =	240	ft
Source Noise Level =	96.5	dBA Leq
Source Distance =	3.2808	ft
Noise level at closest receptor =	49.89421	dBA Leq
Closest sensitive receptor distance (Lmax) =	90	ft
Source Noise Level =	98	dBA Lmax
Source Distance =	3.2808	ft
Noise level at closest receptor =	62.04343	dBA Lmax

Northernthern Play Field

Closest sensitive receptor distance (Leq) =	400	ft
Source Noise Level =	96.5	dBA Leq
Source Distance =	3.2808	ft
Noise level at distance =	44.34799	dBA Leq
Topographic noise attenuation =	7	dBA
Noise level at closest receptor =	37.34799	dBA Leq
Closest sensitive receptor distance (Lmax) =	280	ft
Source Noise Level =	98	dBA Lmax
Source Distance =	3.2808	ft
Noise level at distance =	49.72054	dBA Lmax
Topographic noise attenuation =	7	dBA
Noise level at closest receptor =	42.72054	dBA Lmax

Miscellaneous Noise Sources

Closest sensitive receptor distance (Lmax) =	700	ft
Source Noise Level =	75	dBA Lmax
Source Distance =	50	ft
Noise level at closest receptor =	46.3468	dBA Lmax

Multiple Stationary Noise Source Impact

Southern Baseball Field

Closest sensitive receptor distance (Leq) =	345	ft
Source Noise Level =	96.5	dBA Leq
Source Distance =	3.2808	ft
Noise level at closest receptor =	45.95402	dBA Leq
Closest sensitive receptor distance (Lmax) =	265	ft
Source Noise Level =	98	dBA Lmax
Source Distance =	3.2808	ft
Noise level at closest receptor =	50.31835	dBA Lmax

Southern Soccer Field

Closest sensitive receptor distance (Leq) =	393	ft
Source Noise Level =	96.5	dBA Leq
Source Distance =	3.2808	ft
Noise level at closest receptor =	44.53968	dBA Leq
Closest sensitive receptor distance (Lmax) =	236	ft
Source Noise Level =	98	dBA Lmax
Source Distance =	3.2808	ft
Noise level at closest receptor =	51.57669	dBA Lmax

Northernthern Play Field

Closest sensitive receptor distance (Leq) =	630	ft
Source Noise Level =	96.5	dBA Leq
Source Distance =	3.2808	ft

Noise level at distance =	39.41598	dBA Leq
Topographic noise attenuation =	7	dBA
Noise level at closest receptor =	32.41598	dBA Leq

Closest sensitive receptor distance (Lmax) =	530	ft

Source Noise Level =	98	dBA Lmax
Source Distance =	3.2808	ft

Noise level at distance =	42.7926	dBA Lmax
Topographic noise attenuation =	7	dBA
Noise level at closest receptor =	35.7926	dBA Lmax

Miscellaneous Noise Sources

Closest sensitive receptor distance (Leq) =	850	ft

Source Noise Level =	67	dBA Leq
Source Distance =	50	ft

Noise level at closest receptor =	36.23878	dBA Leq

Closest sensitive receptor distance (Lmax) =	850	ft

Source Noise Level =	75	dBA Lmax
Source Distance =	50	ft

Noise level at closest receptor =	44.23878	dBA Lmax

Combined Noise

Leq	48.67964
Lmax	54.49802

Amphitheater Noise

Concert Events

Closest sensitive receptor distance (Leq) =	900	ft
Source Noise Level =	90	dBA Leq
Source Distance =	50	ft
Noise level at closest receptor =	64.89455	dBA Leq
Closest sensitive receptor distance (Lmax) =	900	ft
Source Noise Level =	98	dBA Lmax
Source Distance =	50	ft
Noise level at closest receptor =	72.89455	dBA Lmax

Church Services

Closest sensitive receptor distance (Leq) =	900	ft
Source Noise Level =	70	dBA Leq
Source Distance =	50	ft
Noise level at closest receptor =	44.89455	dBA Leq
Closest sensitive receptor distance (Lmax) =	900	ft
Source Noise Level =	78	dBA Lmax
Source Distance =	50	ft
Noise level at closest receptor =	52.89455	dBA Lmax

Appendix H

Traffic Study and Supplemental Correspondence

LSA Associates, Inc.

Traffic Study Church of the Woods

July 7, 2008

TRAFFIC STUDY

CHURCH OF THE WOODS

SAN BERNARDINO COUNTY, CALIFORNIA

This Traffic Study
has been prepared under the supervision of
Pritam Deshmukh, P.E.

Signed: _____

REGISTERED PROFESSIONAL ENGINEER
PRITAM DESHMUKH
No. 70075
Exp. 9/30/10
CIVIL
STATE OF CALIFORNIA

LSA

REGISTERED PROFESSIONAL ENGINEER
PRITAM DESHMUKH
No. 2463
Exp. 6/30/10
TRAFFIC
STATE OF CALIFORNIA

July 7, 2008

TRAFFIC STUDY

CHURCH OF THE WOODS

SAN BERNARDINO COUNTY, CALIFORNIA

Prepared for:

Church of the Woods
1410 Calgary Drive
Post Office Box 2000
Lake Arrowhead, California 92352
(909) 337-5483

Prepared by:

LSA Associates, Inc.
1500 Iowa Avenue, Suite 200
Riverside, California 92507
(951) 781-9310

LSA Project No. CTW430

LSA

July 7, 2008

TABLE OF CONTENTS

INTRODUCTION 1

PROJECT DESCRIPTION 1

ANALYSIS METHODOLOGY 1
- STUDY AREA DETERMINATION 4
- DEVELOPMENT OF TRAFFIC VOLUMES 4
- LEVEL OF SERVICE DEFINITIONS AND PROCEDURES 7
- LEVEL OF SERVICE THRESHOLD CRITERIA 9

EXISTING (2007) CONDITIONS 9
- EXISTING ROADWAY SYSTEM 9
- EXISTING (2007) TRAFFIC CONDITIONS 9

PROJECT TRAFFIC 9
- PROJECT TRIP GENERATION 9
- TRIP DISTRIBUTION AND ASSIGNMENT 13

YEAR 2009 OPENING DAY CONDITIONS 14
- YEAR 2009 WITHOUT PROJECT CONDITIONS 19
- YEAR 2009 WITH PROJECT CONDITIONS 19

YEAR 2013 PROJECT BUILD OUT CONDITIONS 19
- YEAR 2013 WITHOUT PROJECT CONDITIONS 24
- YEAR 2013 WITH PROJECT CONDITIONS 24

FORECAST YEAR 2030 CONDITIONS 29
- YEAR 2030 WITHOUT PROJECT CONDITIONS 29
- YEAR 2030 WITH PROJECT CONDITIONS 29

PROJECT CONTRIBUTION TO TOTAL NEW VOLUMES 34

CIRCULATION IMPROVEMENTS 34
- YEAR 2009 INTERSECTION IMPROVEMENTS 34
- YEAR 2013 INTERSECTION IMPROVEMENTS 36
- YEAR 2030 INTERSECTION IMPROVEMENTS 38
- LEVELS OF SERVICE WITH IMPROVEMENTS 40
- ALTERNATIVE MITIGATION MEASURES 40
- COST ESTIMATES 45

SUMMARY AND CONCLUSIONS 49

APPENDICES

A. TRAFFIC COUNT SHEETS
B. VOLUME DEVELOPMENT WORKSHEETS
C. LEVEL OF SERVICE CALCULATION WORKSHEETS
D. PROPOSED SCHEDULE OF EVENTS WITH TRIP GENERATION
E. SIGNAL WARRANT ANALYSIS
F. CONCEPTUAL DRAWINGS – ALTERNATIVE MITIGATION MEASURES
G. COST ESTIMATES AND PROJECT FAIR SHARE
H. ADDENDUM TO THE TRAFFIC IMPACT ANALYSIS – ALTERNATIVE MITIGATION MEASURES
I. MOUNTAIN TRAVEL MODEL

FIGURES AND TABLES

FIGURES

1. Project Location 2
2. Conceptual Site Plan 3
3. Study Area Intersections 5
4. Existing Intersection Geometrics 10
5. Existing PCE Volumes 11
6. Project Trip Distribution 16
7. Year 2009 Project Trip Assignment 17
8. Year 2030 Project Trip Assignment 18
9. Year 2009 Without Project Traffic Volumes 20
10. Year 2009 With Project Traffic Volumes 22
11. Year 2013 Without Project Traffic Volumes 25
12. Year 2013 With Project Traffic Volumes 27
13. Year 2030 Without Project Traffic Volumes 30
14. Year 2030 With Project Traffic Volumes 32
15. Year 2009 With Improvements Intersection Geometrics 37
16. Year 2013 With Improvements Intersection Geometrics 39
17. Year 2030 With Project With Improvements Intersection Geometrics 41

TABLES

A. Level of Service Definitions 7
B. Level of Service Criteria for Unsignalized and Signalized Intersections 8
C. Existing (2007) Intersection Levels of Service 12
D. Project Trip Generation 14
E. Proposed Schedule of Events 15
F. Year 2009 Without Project Intersection Levels of Service 21
G. Year 2009 With Project Intersection Levels of Service 23
H. Year 2013 Without Project Intersection Levels of Service 26
I. Year 2013 With Project Intersection Levels of Service 28
J. Year 2030 Without Project Intersection Levels of Service 31
K. Year 2030 With Project Intersection Levels of Service 33
L. Year 2030 Project Contribution to Analysis Intersections 35
M. Year 2009 With Project with Mitigation Intersection Levels of Service 42
N. Year 2013 With Project with Mitigation Intersection Levels of Service 43
O. Year 2030 With Project with Mitigation Intersection Levels of Service 44
P. Year 2009 Circulation Improvement Costs 46
Q. Year 2013 Circulation Improvement Costs 47
R. Project Contributions to Year 2030 Circulation Improvement Costs 48

INTRODUCTION

This traffic study has been prepared to assess the potential circulation impacts associated with the proposed development of the Church of the Woods in the unincorporated community of Rimforest in San Bernardino County. This report is intended to satisfy the requirements of the County of San Bernardino, as well as the requirements for the disclosure of potential impacts and mitigation measures per the California Environmental Quality Act (CEQA). A Traffic Impact Analysis (TIA) pursuant to the San Bernardino County Congestion Management Program (CMP) is required for this project because it will generate more than 250 peak hour trips on weekends. Consistent with County policy, this traffic study employs the analysis methodologies specified in the CMP.

This report analyzes existing traffic conditions and project-related traffic impacts for the anticipated opening of the proposed project (year 2009 opening day), completion of the proposed project (year 2013 build out), and for the long-range forecast year 2030 condition. This report examines peak hour traffic conditions for Saturday and Sunday because the majority of traffic generated by the project will be from weekend activities at the site.

The peak hours analyzed in this report were determined based on the operations of the site. The large majority of traffic generated by the project on Saturday will be from the church's playing fields, which will host activities throughout the day. Therefore, the greatest overall traffic volumes in the project vicinity will occur during the peak hour of adjacent street traffic. Thus, the Saturday peak hour examined is the peak hour of adjacent street traffic (10:30 a.m. to 12:30 p.m.). The great majority of traffic generated by the project on Sunday will be from the church facility, which will have two morning services; therefore, the Sunday peak hour examined is 10:00 to 11:00 a.m., the hour between the church's two services, when attendees of the first service will depart and attendees of the second service will arrive.

PROJECT DESCRIPTION

The proposed site of the Church of the Woods is located in the unincorporated community of Rimforest, San Bernardino County. The site is approximately 38 acres and is located on the north side of State Route 18 (SR-18, Rim of the World Highway) between Bear Springs Road and Daley Canyon Road. There are currently no active land uses on the site. Figure 1 shows the project location.

The proposed project consists of an 87,768-square foot church facility with a 1,200-seat worship center and two playing fields that can be used for soccer or baseball. Figure 2 presents a conceptual site plan for the project. Access to the site will be provided by a driveway on SR-18. The project will widen SR-18 for approximately 300 feet on either side of the driveway to provide room for an eastbound left-turn lane and a westbound deceleration/acceleration lane.

ANALYSIS METHODOLOGY

This traffic impact analysis was prepared consistent with the requirements of the County of San Bernardino. This study evaluates existing (2007) conditions, year 2009 opening day conditions, year 2013 project build out conditions, and forecast year 2030 conditions in the vicinity of the proposed

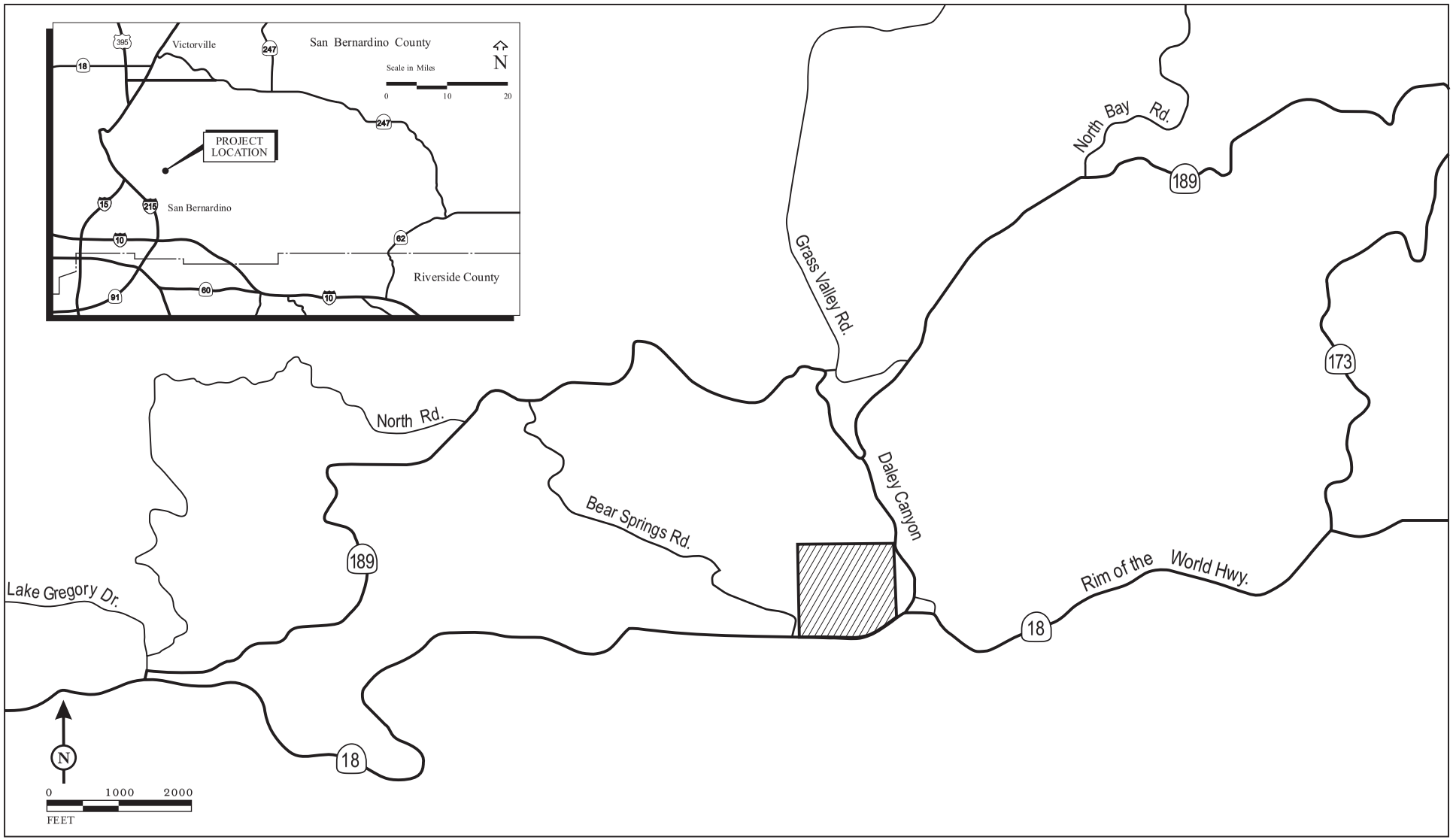

LSA

FIGURE 1

PROJECT LOCATION

Church of the Woods

Project Location

R:\CTW430\Graphics\Traffic\proj loc.cdr (1/21/05)

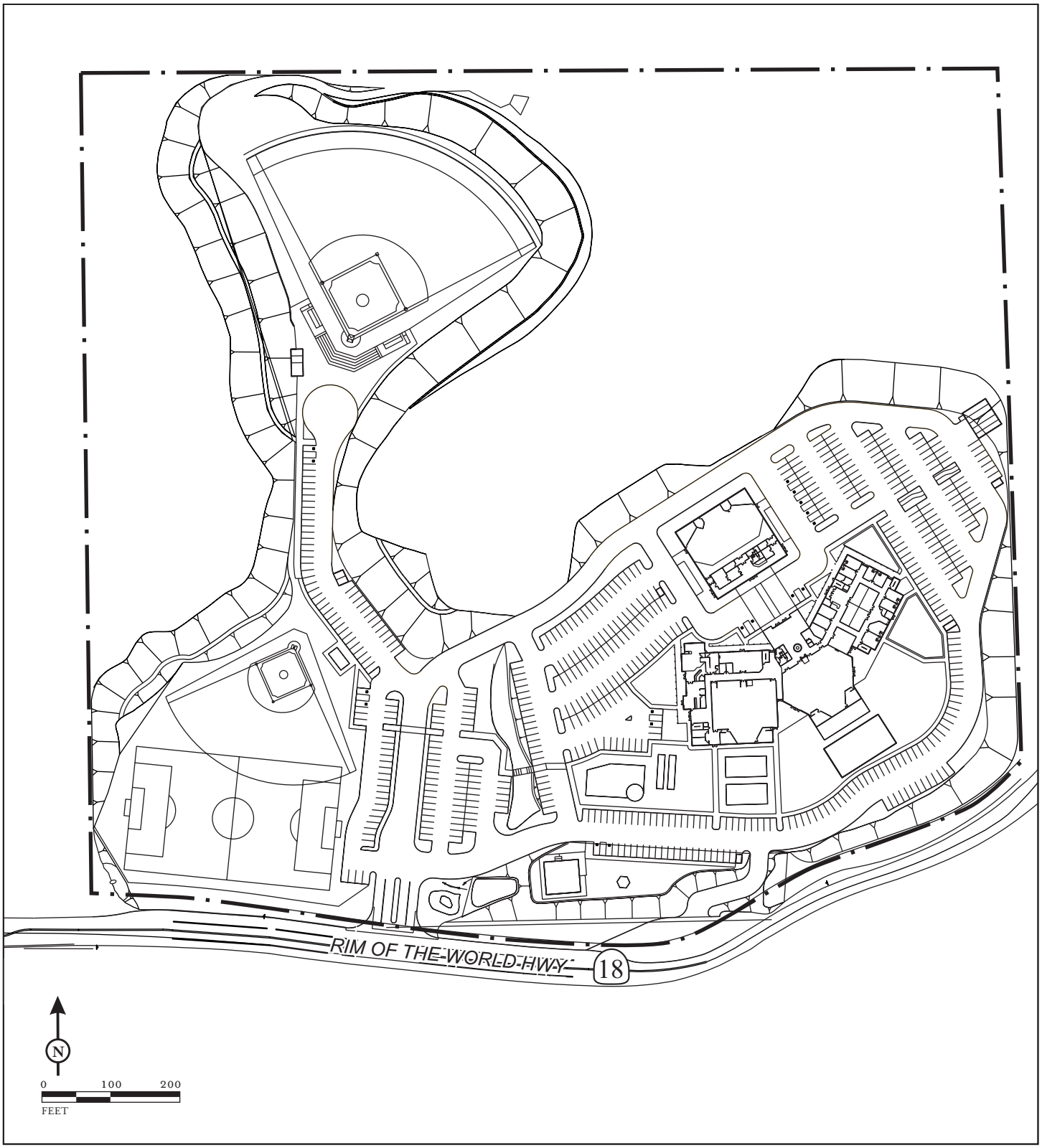

LSA

FIGURE 2

PROJECT BOUNDARY

Church of the Woods

Conceptual Site Plan

SOURCE: Church of the Woods, 2005.

R:\CTW430\Graphics\Traffic\siteplan.cdr (02/11/05)

project, with and without project development. The analysis examines Saturday peak hour and Sunday peak hour traffic conditions in the vicinity of the proposed project.

Study Area Determination

The only CMP facilities near the project site are State highways (i.e., SR-18, SR-189, and SR-173). As a result, there are only two CMP intersections in the vicinity (SR-18/SR-189 and SR-18/SR-173). The proposed project, however, would have an impact on some key local roadways and intersections; therefore, the study area for the traffic analysis was developed in consultation with County staff. The study area includes the following 13 intersections:

- North Road/SR-189;
- Bear Springs Road/SR-189;
- Grass Valley Road/SR-189;
- Daley Canyon Road/SR-189;
- North Bay Road/SR-189;
- Lake Gregory Road/SR-189;
- Lake Gregory Road/SR-18;
- Bear Springs Road/SR-18;
- Project Access/SR-18 (future intersection);
- Daley Canyon Road/SR-18;
- Daley Canyon Road/Daley Canyon Access Road;
- Daley Canyon Access Road/SR-18; and
- SR-173/SR-18.

Figure 3 illustrates the locations of the analysis intersections.

Development of Traffic Volumes

Existing (2007) Volumes. Twenty-four-hour directional volumes were collected on SR-18 adjacent to the project site on a Saturday and Sunday in October 2004. Count sheets are contained in Appendix A. The Saturday peak period was determined to be 10:30 a.m. to 12:30 p.m. Since the peak period was not expected to change from 2004, the same peak periods were counted in 2007. Intersection turning movement counts were collected in March 2007 on a Saturday from 10:30 a.m. to 12:30 p.m. to capture the peak hour of adjacent street traffic and on a Sunday from 9:30 to 11:30 a.m. to capture the peak hour of the church's activities. Peak hour traffic volumes were taken from the highest one hour of traffic volumes occurring during each of these count periods. Passenger car equivalent (PCE) volumes were computed using a PCE factor of 1.5 for 2-axle trucks, 2.0 for 3-axle trucks, and 3.0 for trucks with 4 or more axles. Truck percentages for locations at which classification

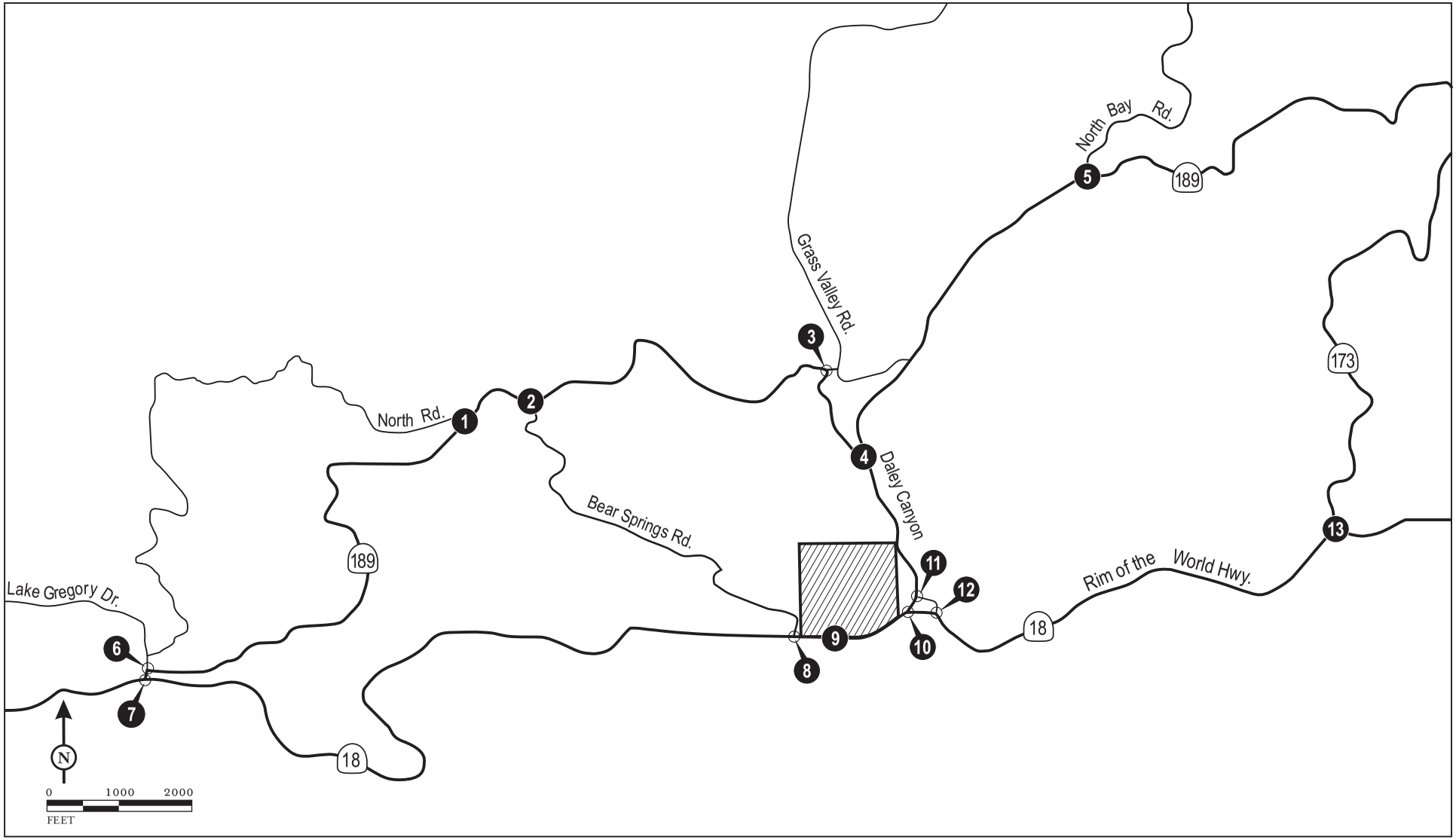

LSA

FIGURE 3

PROJECT LOCATION

ANALYSIS INTERSECTION

Church of the Woods

Study Area Intersections

R:\CTW430\Graphics\Traffic\study area.cdr (1/21/05)

counts were not conducted were developed from the average truck percentage and average truck PCE at adjacent intersections.

Traffic volumes in the San Bernardino Mountains fluctuate with seasonal variations in activities in the area; therefore, a seasonal adjustment factor was developed by comparing the latest Caltrans peak month and peak hour volume data against the March 2007 counts. Caltrans peak hour volumes were found to be 25.42 percent greater than the March counts; therefore, the existing volumes were further increased by 25.42 percent to account for seasonal variation. Volume development worksheets are contained in Appendix B.

Year 2009, Year 2013, and Year 2030 Without Project Conditions Traffic Volumes. The CMP requires examination of project traffic impacts under opening year 2009 conditions, build out year 2013, and forecast year 2030 conditions. The CMP TIA procedures require that an analysis be conducted utilizing forecast year traffic data from an approved local or regional traffic model. In the case of the Church of the Woods project, the Mountain Travel model maintained by the SANBAG was utilized.

The base year of the Mountain Travel model is 2000 and the future year is 2030. Base year and future year a.m. and p.m. peak period arterial segment volumes were available from the Mountain Travel model. These peak period volumes are for a 12-hour period. To determine the Saturday and Sunday peak hour intersection turn movements for the year 2009, year 2013, and year 2030 conditions, the following methodology was used:

1. The modeled 2000 peak period volumes for each roadway segment in the study area were identified from loaded network model plots. The traffic volumes on all north-south roads were summed to produce a measure of total north-south traffic volumes in the study area. Similarly, the traffic volumes on all east-west roads were summed to produce a measure of total east-west traffic volume in the study area.
2. The modeled 2030 peak period volumes for each roadway segment in the study area were identified from loaded network model plots. Measures of total north-south and east-west traffic volumes in 2030 were developed as in Step 1.
3. An annual growth rate was computed separately for the north-south roadways and for the east-west roadways. For this analysis, a constant percentage growth rate compounded annually was assumed across the 30-year period from 2000 to 2030.
4. The growth rates between existing (2007) counts and year 2009 were computed by applying the annual growth rates for two years. The resulting growth rate between 2007 and 2009 for north-south roadways was 7.19 percent; the growth rate for east-west roadways was 2.38 percent. The growth rates between existing (2007) counts and year 2013 were computed by applying the annual growth rates for six years. The resulting growth rate between 2007 and 2013 for north-south roadways was 23.5 percent; the growth rate for east-west roadways was 7.30 percent. The growth rates between existing (2007) counts and forecast year 2030 were computed by compounding the annual growth rates over 23 years. The resulting growth rate between 2007 and 2030 for north-south roadways was 122.18 percent; the growth rate for east-west roadways was 30.99 percent. The a.m. peak period growth rates were considered for developing year 2009 and

year 2030 link volumes since a.m. peak period growth rates were higher than p.m. peak period growth rates.

5. Seasonally adjusted existing (2007) approach and departure volumes at each intersection were increased by the appropriate growth factor to develop year 2009, year 2013, and year 2030 approach and departure volumes.
6. Total approach and total departure volumes were balanced within each intersection by setting the total departure volumes equal to the total approach volume and prorating the departure volumes computed in Step 5 for each leg of the intersection.
7. Year 2009, year 2013, and year 2030 turn volumes were developed using existing turn volumes and the future approach and departure volumes, based on the methodologies contained in the National Cooperative Highway Research Program (NCHRP) Report 255: *Highway Traffic Data for Urbanized Area Project Planning and Design* (Transportation Research Board, December 1982).
8. San Bernardino County provided information about two approved and pending projects in the vicinity. Traffic from the approved "Rob Roy" residential project (Tentative Tract No. 15612) was added at all study intersections, per the approved traffic study prepared by Lawrence Eisenhart, Consulting Engineer (April 5, 1998). The "Royal Rangers" camp project was not included because it will generate only nominal traffic during the analysis periods (per Table 31 of the November 2003 *Draft EIR for the Royal Rangers Adventure Campground and Conference Center*).

Volume development sheets summarizing the above steps are included in Appendix B. A copy of the Mountain Travel model is included in Appendix I.

Level of Service Definitions and Procedures

Roadway operations and the relationship between capacity and traffic volumes are generally expressed in terms of levels of service (which are defined using the letter grades A through F). These levels recognize that, while an absolute limit exists as to the amount of traffic traveling through a given intersection (the absolute capacity), the conditions that motorists experience rapidly deteriorate as traffic approaches the absolute capacity. Under such conditions, congestion is experienced. There is general instability in the traffic flow, which means that relatively small incidents (e.g., momentary engine stall) can cause considerable fluctuations in speeds and delays. This near-capacity situation is labeled Level of Service (LOS) E. Beyond LOS E, capacity has been exceeded, and arriving traffic will exceed the ability of the intersection to accommodate it. An upstream queue will then form and continue to expand in length until the demand volume again reduces.

A complete description of the meaning of level of service can be found in the Transportation Research Board Special Report 209, *Highway Capacity Manual*. The Manual establishes levels of service A through F. Table A gives brief descriptions of the six levels of service, as abstracted from the Manual.

Table B shows the level of service criteria for unsignalized and signalized intersections.

Table A: Level of Service Definitions

LOS	Description
A	No approach phase is fully utilized by traffic and no vehicle waits longer than one red indication. Typically, the approach appears quite open, turns are made easily, and nearly all drivers find freedom of operation.
B	This service level represents stable operation, where an occasional approach phase is fully utilized and a substantial number are approaching full use. Many drivers begin to feel restricted with platoons of vehicles.
C	This level still represents stable operating conditions. Occasionally drivers may have to wait through more than one red signal indication, and backups may develop behind turning vehicles. Most drivers feel somewhat restricted, but not objectionably so.
D	This level encompasses a zone of increasing restriction approaching instability at the intersection. Delays to approaching vehicles may be substantial during short peaks within the peak period; however, enough cycles with lower demand occur to permit periodic clearance of developing queues, thus preventing excessive backups.
E	Capacity occurs at the upper end of this service level. It represents the most vehicles that any particular intersection approach can accommodate. Full utilization of every signal cycle is seldom attained no matter how great the demand.
F	This level describes forced flow operations at low speeds, where volumes exceed capacity. These conditions usually result from queues backing up from a restriction downstream. Speeds are reduced substantially and stoppages may occur for short or long periods of time due to the congestion. In the extreme case, both speed and volume can drop to zero.

Table B: Level of Service Criteria for Unsignalized and Signalized Intersections

Level of Service	Unsignalized Intersection Average Delay per Vehicle (sec.)	Signalized Intersection Average Delay per Vehicle (sec.)
A	≤ 10	≤ 10
B	> 10 and ≤ 15	> 10 and ≤ 20
C	> 15 and ≤ 25	> 20 and ≤ 35
D	> 25 and ≤ 35	> 35 and ≤ 55
E	35 and ≤ 50	> 55 and ≤ 80
F	> 50	> 80

For all study intersections, the 2000 *Highway Capacity Manual* (HCM 2000) analysis methodologies were used to determine intersection levels of service. Consistent with San Bernardino County CMP guidelines, any intersection at which the volume-to-capacity ratio is greater than 1.0 is considered to be operating at LOS F, regardless of delay. All levels of service for unsignalized intersections were calculated using the Traffix version 7.9 software, which uses the HCM 2000 methodologies. Levels of service for signalized intersections were calculated using Synchro version 6.0 software and levels of service for roundabouts were calculated using Sidra software.

Level of Service Threshold Criteria

For intersections under the jurisdiction of the County of San Bernardino, LOS C is the standard for intersection level of service. Caltrans considers acceptable level of service to be between C and D for all intersections under its jurisdiction, which has been interpreted to mean a weighted average delay of 45 seconds or less.

The intersection of Daley Canyon Road/Daley Canyon Access Road is the only study intersection under the jurisdiction of the County of San Bernardino; therefore, a level of service condition in excess of LOS C is considered an impact requiring mitigation at this location. All remaining study intersections are under the jurisdiction of Caltrans; therefore, a weighted average delay in excess of 45 seconds is considered an impact requiring mitigation at these locations.

EXISTING (2007) CONDITIONS

Existing Roadway System

An inventory of the existing study area street system was conducted by LSA during November 2004. All of the roads in the study area are two-lane roads, excluding widening at intersections and passing lanes, and all travel through mountain terrain. All of the study area intersections are currently unsignalized. Figure 4 illustrates the existing turn lanes and stop control at study area intersections.

SR-18 is the major access route between the Lake Arrowhead area and San Bernardino. Access to local communities (Blue Jay, Lake Arrowhead, and Twin Peaks) is provided via SR-189, Daley Canyon Road, and SR-173.

Existing (2007) Traffic Conditions

The seasonally adjusted existing (2007) Saturday and Sunday peak hour turn volumes for the analysis intersections are illustrated in Figure 5. An intersection level of service analysis was conducted for existing conditions to determine current circulation system performance. Level of service calculation worksheets are contained in Appendix C. The existing conditions levels of service for the study area intersections are summarized in Table C. As this summary indicates, all study area intersections are currently operating at satisfactory levels of service, with the exception of the following:

- Grass Valley Road/SR-189 (Saturday peak hour);
- Daley Canyon Road/SR-189 (Saturday peak hour); and
- SR-173/SR-18 (Saturday peak hour).

PROJECT TRAFFIC

Project Trip Generation

The Saturday peak hour project trip generation will consist of trips generated by the recreational users of the site and the Sunday peak hour trip generation will consist of trips generated by the religious

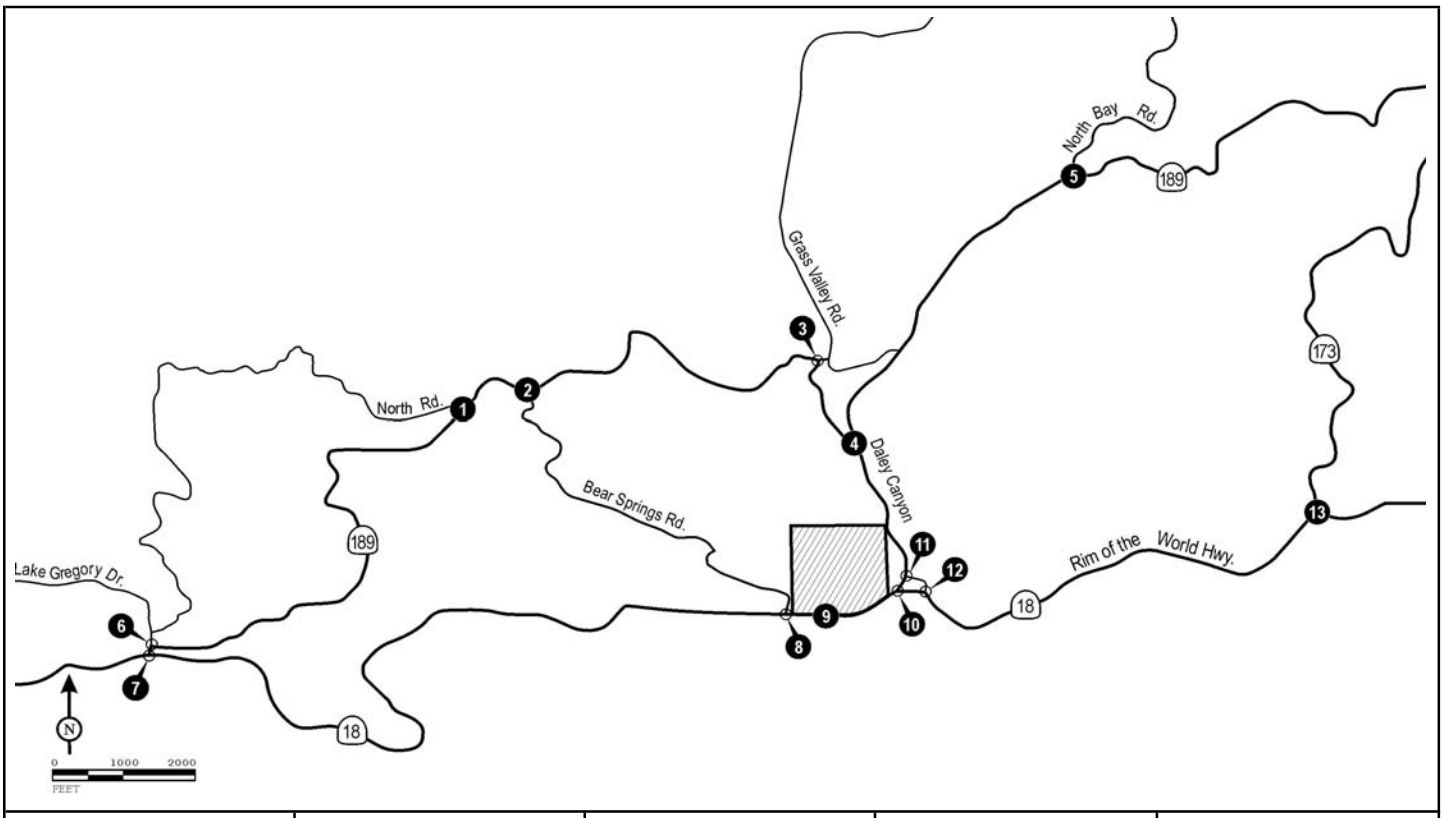

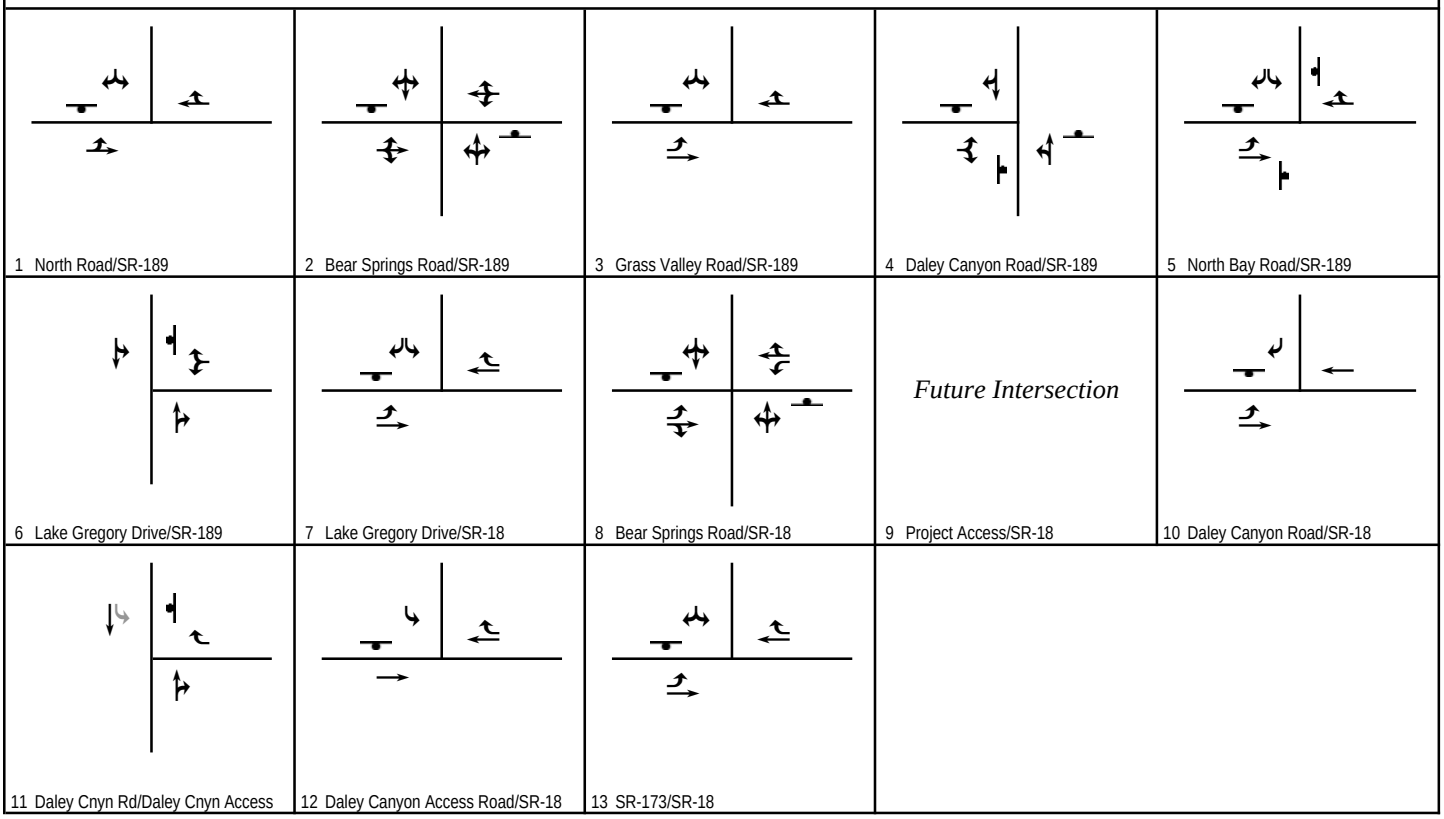

LSA

FIGURE 4

Legend

Stop Sign

Church of the Woods

Existing (2007) Intersection Geometrics

R:\CTW430\July 2008\g-30_04_geometrics exist (7/8/2008)

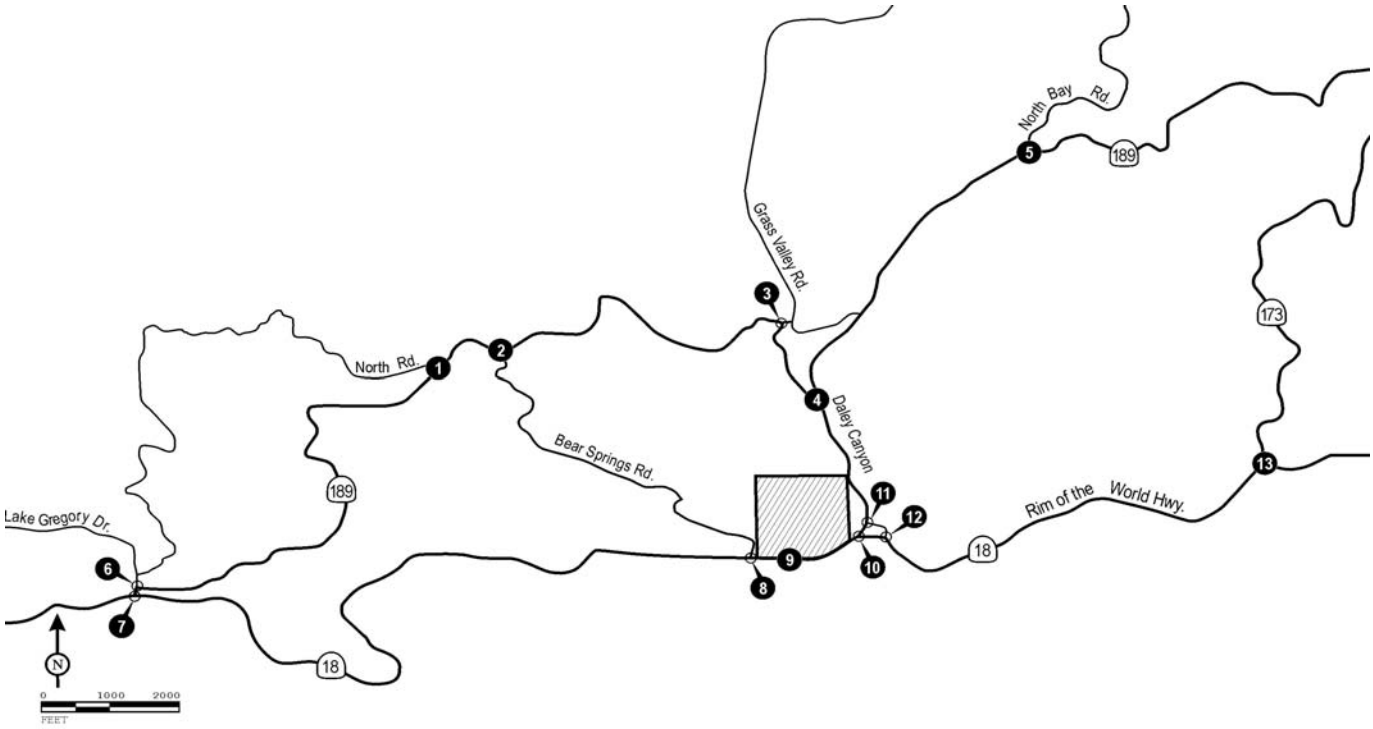

49 / 50 162 / 87 134 / 75 152 / 145 36 / 35 162 / 79 1 North Road/SR-189	59 / 56 10 / 10 34 / 33 31 / 18 208 / 176 10 / 11 63 / 40 214 / 142 31 / 20 20 / 11 13 / 13 14 / 9 2 Bear Springs Road/SR-189	232 / 157 256 / 228 143 / 84 84 / 53 114 / 64 206 / 156 3 Grass Valley Road/SR-189	74 / 39 241 / 263 306 / 183 183 / 186 151 / 88 324 / 154 4 Daley Canyon Road/SR-189	265 / 232 133 / 71 100 / 78 213 / 186 281 / 166 310 / 189 5 North Bay Road/SR-189
268 / 138 100 / 64 82 / 73 71 / 151 196 / 117 66 / 39 6 Lake Gregory Drive/SR-189	90 / 152 250 / 137 149 / 102 367 / 416 113 / 54 410 / 232 7 Lake Gregory Drive/SR-18	30 / 19 0 / 3 41 / 13 25 / 14 606 / 469 9 / 10 46 / 16 715 / 472 1 / 13 1 / 15 4 / 15 8 Bear Springs Road/SR-18	*Future Intersection* 9 Project Access/SR-18	281 / 285 331 / 293 304 / 171 467 / 263 10 Daley Canyon Road/SR-18
281 / 285 153 / 169 153 / 139 304 / 171 11 Daley Cnyn Rd/Daley Cnyn Access	153 / 169 153 / 139 331 / 293 467 / 263 12 Daley Canyon Access Road/SR-18	143 / 138 85 / 45 90 / 117 253 / 167 247 / 216 292 / 157 13 SR-173/SR-18		

FIGURE 5

Table C - Existing (2007) Intersection Levels of Service

Intersection	Control	Saturday Peak Hour V/C	Saturday Peak Hour Delay (sec.)	Saturday Peak Hour LOS		Sunday Peak Hour V/C	Sunday Peak Hour Delay (sec.)	Sunday Peak Hour LOS
1 . North Road/SR-189	TWSC	-	19.0	C		-	12.3	B
2 . Bear Springs Road/SR-189	TWSC	-	16.8	C		-	12.9	B
3 . Grass Valley Road/SR-189	TWSC	-	82.9	F	*	-	17.3	C
4 . Daley Canyon Road/SR-189	AWSC	0.95	41.0	E	*	0.58	13.7	B
5 . North Bay Road/SR-189	AWSC	0.63	17.5	C		0.49	12.9	B
6 . Lake Gregory Drive/SR-189	TWSC	-	18.8	C		-	20.3	C
7 . Lake Gregory Drive/SR-18	TWSC	-	29.8	D		-	14.5	B
8 . Bear Springs Road/SR-18	TWSC	-	24.7	C		-	17.3	C
9 . Project Access/SR-18		*Future Intersection*				*Future Intersection*		
10 . Daley Canyon Road/SR-18	TWSC	-	14.4	B		-	15.5	C
11 . Daley Cnyn Rd/Daley Cnyn Access	TWSC	-	11.5	B		-	11.2	B
12 . Daley Canyon Access Road/SR-18	TWSC	-	32.1	D		-	26.1	D
13 . SR-173/SR-18	TWSC	-	68.9	F	*	-	16.6	C

* Exceeds LOS standard

Notes:

V/C = Volume/Capacity Ratio
LOS = Level of Service
AWSC = All-Way Stop Control
TWSC = Two-Way Stop Control
For TWSC intersections, reported delay is for worst-case approach.

users of the site. Table D summarizes the trip generation for the Church of the Woods project. The following describes the methodology and assumptions used to calculate the project trip generation:

The Saturday peak hour trip generation was calculated based on rates provided for Land Use 488 ("Soccer Complex") from the Institute of Transportation Engineers (ITE) *Trip Generation* (7th Edition). The project is projected to generate 58 trips during the Saturday peak hour in 2009, 2013, and 2030. Saturday peak hour trip generation for the project consists exclusively of trips to and from the playing fields.

The Sunday peak hour trip generation was calculated based on estimated church attendance. The church will have two Sunday services: 8:30 to 10:00 a.m. and 11:00 a.m. to 12:30 p.m. There will be one hour between services, during which time the attendees from the first service will depart and the attendees of the second service will arrive. Based on current attendance and future projections, it is expected that each service will have 500 attendees by 2009 and 1,200 attendees by 2013. Attendees will arrive and depart via automobiles with an average occupancy of three persons per vehicle. Based on these assumptions, the church is projected to generate 334 trips during the Sunday peak hour in 2009 and 800 trips during the Sunday peak hour in 2013 and 2030.

In addition to the activities described above, the project site will host a variety of other events. Table E presents a preliminary schedule of such events. Trip generation for these evening activities, including the number of trips during peak and off-peak hours, is included in Appendix D. On no evening will these events generate 250 peak hour trips, which is the threshold for requiring analysis of traffic impacts under the CMP.

Trip Distribution and Assignment

Trip distribution patterns for the proposed project were developed by examining the location of residential development in the vicinity of the project. The church and playing fields are expected to draw residents of the Blue Jay, Twin Peaks, Crestline, and Lake Arrowhead communities. Figure 6 illustrates the distribution pattern for trips to and from the proposed project that was assumed in this analysis. The project trip generation was applied to the trip distribution pattern for the proposed project to develop trip assignments for new project trips. Figure 7 illustrates the assignment of new project trips through each of the study area intersections under year 2009 conditions. Figure 8 illustrates the assignment of new project trips through each of the study area intersections under year 2030 conditions.

YEAR 2009 OPENING DAY CONDITIONS

This section discusses forecast traffic conditions, with and without the proposed project, under year 2009 conditions. Year 2009 traffic volumes were developed using the approach discussed under the Analysis Methodology section of this traffic study. The analysis of 2009 conditions is based on the existing circulation system, with no improvements anticipated other than those that are part of the project.

Table D - Project Trip Generation

	Year 2009							
	Saturday Peak Hour				Sunday Peak Hour			
Land Use	**Units**	**In**	**Out**	**Total**	**Units**	**In**	**Out**	**Total**
Soccer Complex	2 Fields							
Trips/Unit[1]		13.79	14.94	28.73				
Trip Generation		28	30	58				
Church					500 Persons			
Trip Generation[2]						167	167	334

	Year 2013/2030							
	Saturday Peak Hour				Sunday Peak Hour			
Land Use	**Units**	**In**	**Out**	**Total**	**Units**	**In**	**Out**	**Total**
Soccer Complex	2 Fields							
Trips/Unit[1]		13.79	14.94	28.73				
Trip Generation		28	30	58				
Church					1200 Persons			
Trip Generation[2]						400	400	800

[1] Rates based on peak hour of generator for Land Use 488 - Soccer Complex from Institute of Transportation Engineers (ITE) *Trip Generation* , 7th Edition.

[2] The church will have 2 services: 8:30 am to 10:00 am, and 11:00 am to 12:30 pm. There will be one hour between services, during which time the attendees from the first service will depart and the attendees of the second service will arrive. Based on current attendance and future projections, it is expected that each service will have 500 attendees in 2008 and 1,200 attendees in 2030. Attendees will arrive and depart via automobiles with an average occupancy of 3 persons/vehicle.

Table E - Proposed Schedule of Events

Activity by Day of Week	Time
Monday	
Fife and Drum	5 - 7 p.m.
Men's Accountability Group	6:30 - 8:30 p.m.
Care Groups	7 - 9 p.m.
Tuesday	
Scouts	6:30 - 8:30 p.m.
Worship Choir	7 - 9 p.m.
Care Groups	7 - 9 p.m.
Wednesday	
Skateboard Park	4 - 6 p.m.
Wednesday Night Dinner	5:30 - 6:30 p.m.
Study for all ages	6:30 - 8:30 p.m.
Thursday	
Prayer Power Hour	6 - 7 p.m.
Care Groups	7 - 9 p.m.
Friday	
Keepers of the Home	6 - 8 p.m.
Singles Group	6:30 - 9:30 p.m.
Skateboard Park	5 - 9 p.m.
Saturday	
Band Rehearsal	6 - 9:30 p.m.
Skateboard Park	5 - 9 p.m.
Service	7 - 8:30 p.m.
After Glo Service	9 - 10 p.m.
Sunday	
Home Builders Care Group	5 - 9 p.m.
Young Adult Study	7 - 9 p.m.

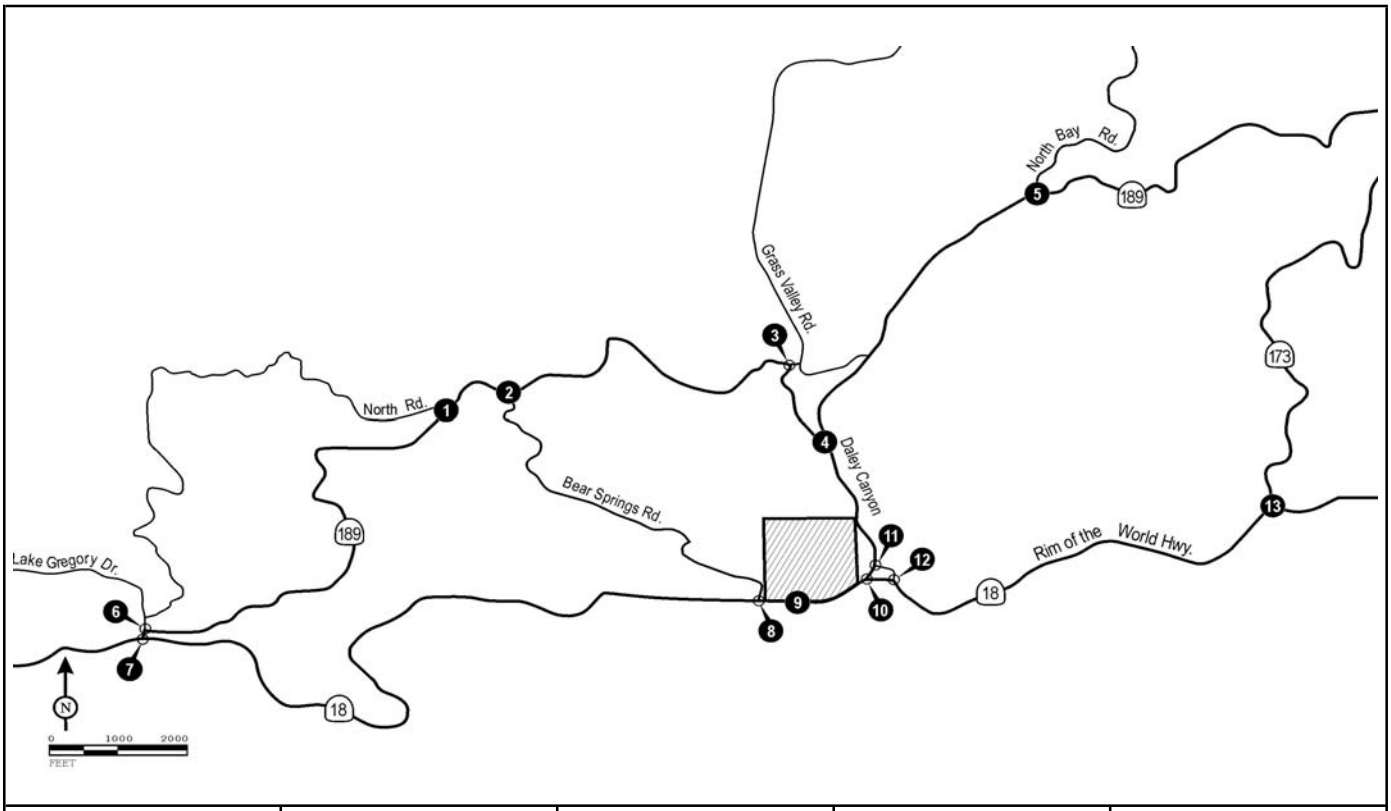

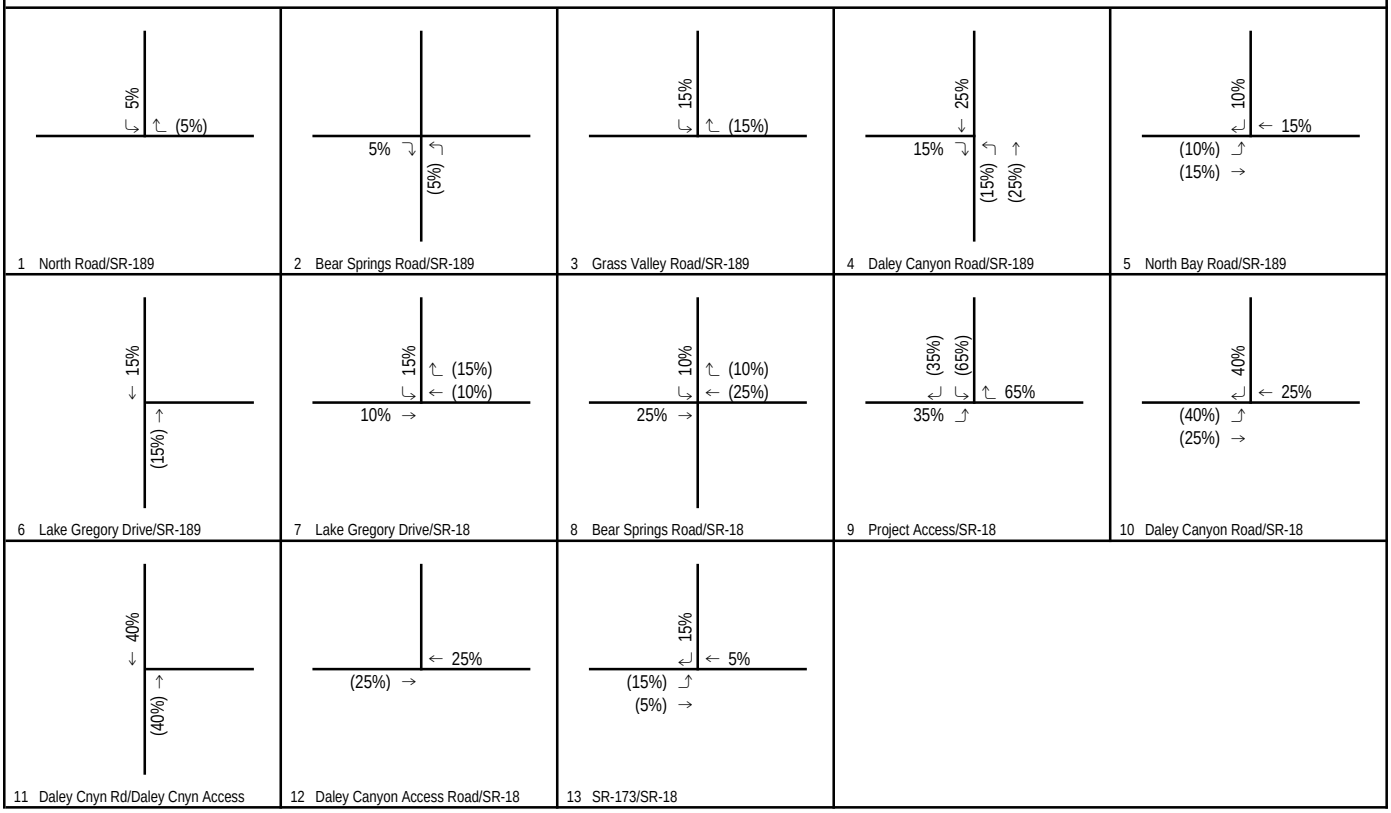

FIGURE 6

12% (34%) Inbound (Outbound) Distribution

Church of the Woods

Project Trip Distribution

R:\CTW430\July 2008\g-30_06_dist (7/8/2008)

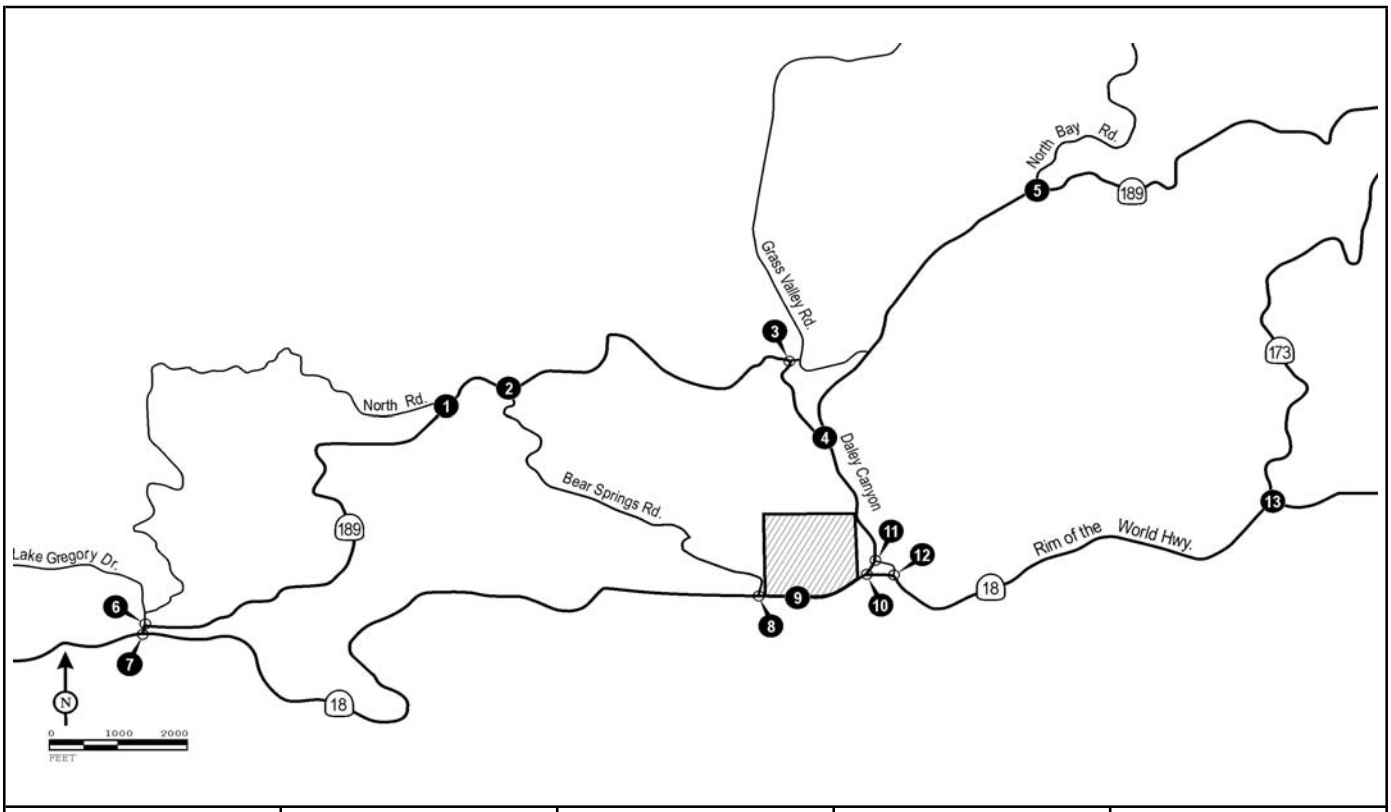
North Bay Rd.
189
Grass Valley Rd.
173
North Rd.
Daley Canyon
Bear Springs Rd.
Rim of the World Hwy.
Lake Gregory Dr.
18
N
0 1000 2000
FEET

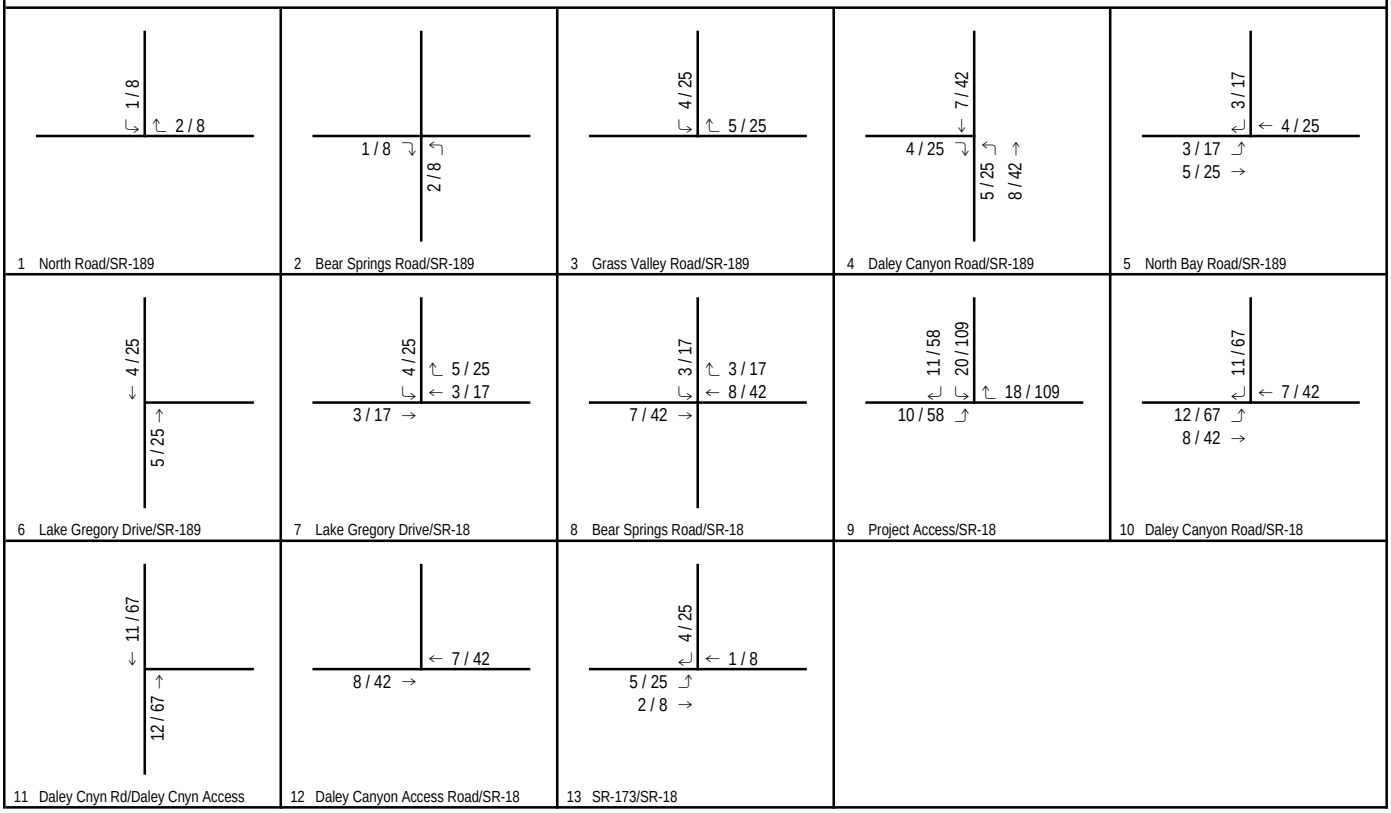
1 / 8
2 / 8
1 North Road/SR-189
1 / 8
2 / 8
2 Bear Springs Road/SR-189
4 / 25
5 / 25
3 Grass Valley Road/SR-189
7 / 42
4 / 25
5 / 25
8 / 42
4 Daley Canyon Road/SR-189
3 / 17
4 / 25
3 / 17
5 / 25
5 North Bay Road/SR-189
4 / 25
5 / 25
6 Lake Gregory Drive/SR-189
4 / 25
5 / 25
3 / 17
3 / 17
7 Lake Gregory Drive/SR-18
3 / 17
3 / 17
8 / 42
7 / 42
8 Bear Springs Road/SR-18
11 / 58
20 / 109
18 / 109
10 / 58
9 Project Access/SR-18
11 / 67
7 / 42
12 / 67
8 / 42
10 Daley Canyon Road/SR-18
11 / 67
12 / 67
11 Daley Cnyn Rd/Daley Cnyn Access
7 / 42
8 / 42
12 Daley Canyon Access Road/SR-18
4 / 25
1 / 8
5 / 25
2 / 8
13 SR-173/SR-18

FIGURE 7

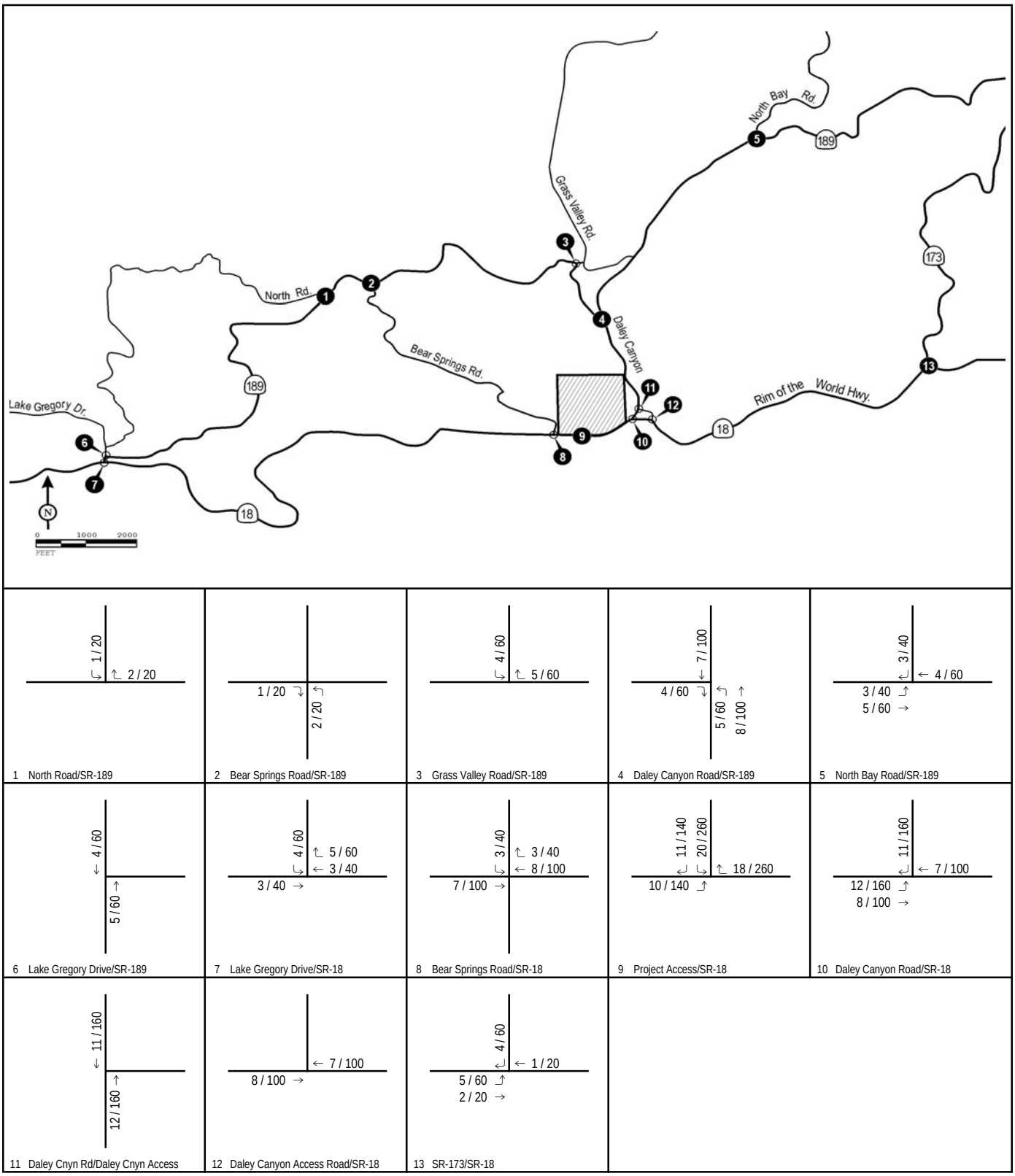
North Bay Rd.
189
Grass Valley Rd.
173
North Rd.
Daley Canyon
Bear Springs Rd.
Rim of the World Hwy.
Lake Gregory Dr.
189
18
18
N
0 1000 2000
FEET
1 / 20
2 / 20
1 North Road/SR-189
1 / 20
2 / 20
2 Bear Springs Road/SR-189
4 / 60
5 / 60
3 Grass Valley Road/SR-189
7 / 100
4 / 60
5 / 60
8 / 100
4 Daley Canyon Road/SR-189
3 / 40
4 / 60
3 / 40
5 / 60
5 North Bay Road/SR-189
4 / 60
5 / 60
6 Lake Gregory Drive/SR-189
4 / 60
5 / 60
3 / 40
3 / 40
7 Lake Gregory Drive/SR-18
3 / 40
3 / 40
8 / 100
7 / 100
8 Bear Springs Road/SR-18
11 / 140
20 / 260
18 / 260
10 / 140
9 Project Access/SR-18
11 / 160
7 / 100
12 / 160
8 / 100
10 Daley Canyon Road/SR-18
11 / 160
12 / 160
11 Daley Cnyn Rd/Daley Cnyn Access
7 / 100
8 / 100
12 Daley Canyon Access Road/SR-18
4 / 60
1 / 20
5 / 60
2 / 20
13 SR-173/SR-18

FIGURE 8

Year 2009 Without Project Conditions

Figure 9 illustrates the year 2009 without project Saturday and Sunday peak hour turn volumes at the study area intersections. An LOS analysis was conducted to determine projected circulation system performance. The year 2009 without project levels of service for the study area intersections are summarized in Table F. The level of service calculation sheets are contained in Appendix C.

As indicated in Table F, all intersections examined are projected to operate at satisfactory levels of service under year 2009 without project conditions, with the exception of the following:

- Grass Valley Road/SR-189 (Saturday peak hour);
- Daley Canyon Road/SR-189 (Saturday peak hour);
- Lake Gregory Drive/SR-18 (Saturday peak hour); and
- Daley Canyon Access Road/SR-18 (Saturday peak hour).
- SR-173/SR-18 (Saturday peak hour).

Year 2009 With Project Conditions

The year 2009 with project condition considers the addition of traffic generated by the proposed project to the roadways in the project vicinity on opening day. Figure 10 illustrates the year 2009 with project Saturday and Sunday peak hour turn volumes at the study area intersections. An LOS analysis was conducted to determine projected system performance. The year 2009 with project levels of service for the study area intersections are summarized in Table G. The level of service calculation sheets are contained in Appendix C.

As indicated in Table G, all intersections examined are projected to operate at satisfactory levels of service under year 2009 with project conditions, with the exception of the following:

- Grass Valley Road/SR-189 (Saturday and Sunday peak hours);
- Daley Canyon Road/SR-189 (Saturday peak hour);
- Lake Gregory Drive/SR-18 (Saturday peak hour);
- Daley Canyon Road/SR-18 (Sunday peak hour);
- Daley Canyon Access Road/SR-18 (Saturday and Sunday peak hours); and
- SR-173/SR-18 (Saturday peak hour).

YEAR 2013 PROJECT BUILD OUT CONDITIONS

This section discusses forecast traffic conditions, with and without the proposed project, under year 2013 conditions. Year 2013 traffic volumes were developed using the approach discussed under the Analysis Methodology section of this traffic study. The analysis of 2013 conditions is based on the existing circulation system, with no improvements anticipated other than those that are part of the project.

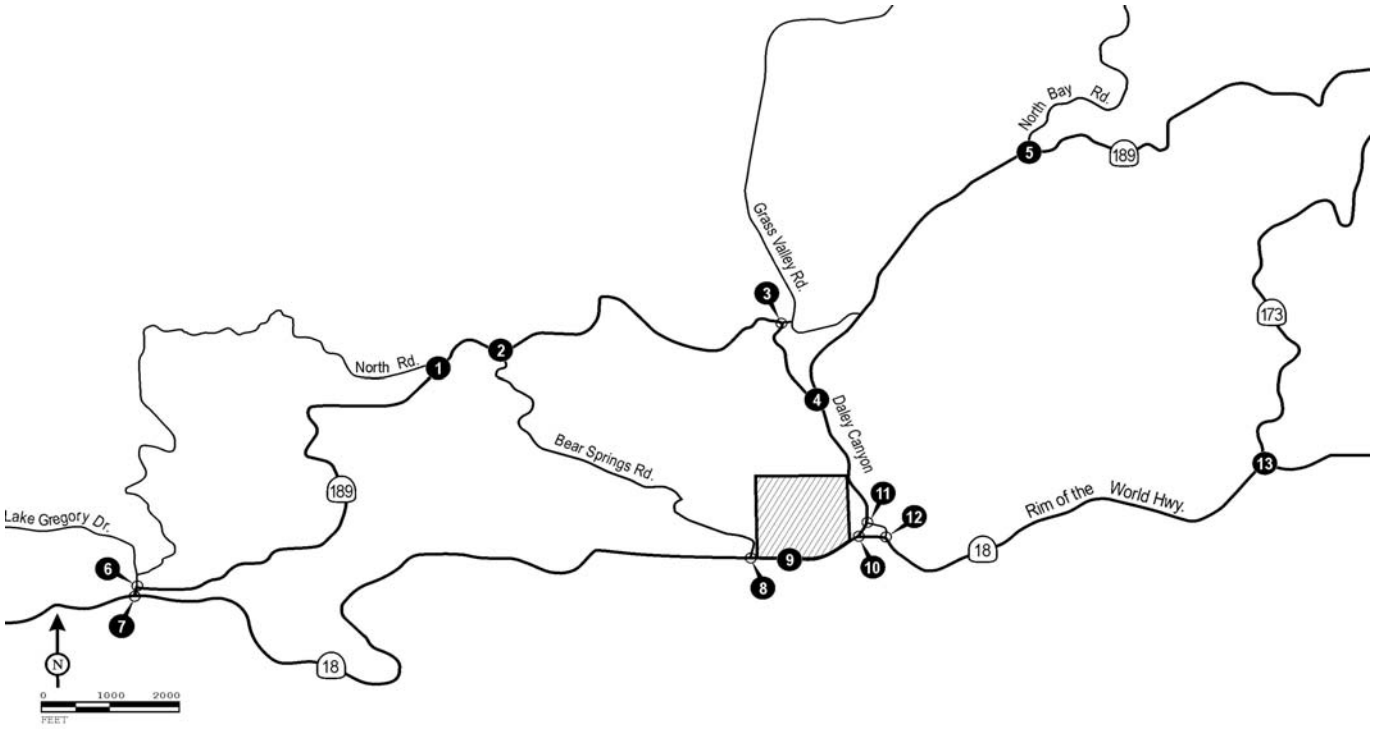

52 / 53 170 / 91 141 / 79 162 / 153 38 / 37 168 / 83 1 North Road/SR-189	62 / 59 11 / 11 36 / 35 33 / 19 219 / 185 11 / 12 66 / 42 221 / 147 33 / 21 21 / 12 14 / 14 15 / 10 2 Bear Springs Road/SR-189	250 / 170 359 / 322 185 / 120 86 / 54 122 / 70 211 / 160 3 Grass Valley Road/SR-189	76 / 40 253 / 276 313 / 187 283 / 278 190 / 120 340 / 162 4 Daley Canyon Road/SR-189	278 / 244 140 / 75 105 / 82 220 / 192 295 / 174 323 / 198 5 North Bay Road/SR-189
274 / 142 103 / 65 84 / 75 73 / 154 201 / 120 67 / 40 6 Lake Gregory Drive/SR-189	92 / 156 256 / 140 152 / 105 457 / 499 116 / 55 447 / 263 7 Lake Gregory Drive/SR-18	32 / 20 0 / 3 43 / 14 27 / 15 701 / 554 10 / 11 48 / 17 759 / 508 1 / 16 4 / 16 1 / 14 8 Bear Springs Road/SR-18	715 / 673 824 / 473 9 Project Access/SR-18	376 / 373 339 / 300 346 / 204 478 / 269 10 Daley Canyon Road/SR-18
376 / 373 171 / 186 165 / 149 346 / 204 11 Daley Cnyn Rd/Daley Cnyn Access	171 / 186 165 / 149 339 / 300 478 / 269 12 Daley Canyon Access Road/SR-18	150 / 145 89 / 47 94 / 123 263 / 174 259 / 227 309 / 170 13 SR-173/SR-18		

FIGURE 9

Saturday / Sunday Peak Hour Volume

Church of the Woods

Year 2009 Without Project Traffic Volumes

R:\CTW430\July 2008\g-30_09_2009 np (7/8/2008)

Table F - Year 2009 Without Project Intersection Levels of Service

Intersection	Control	Saturday Peak Hour V/C	Saturday Peak Hour Delay (sec.)	Saturday Peak Hour LOS		Sunday Peak Hour V/C	Sunday Peak Hour Delay (sec.)	Sunday Peak Hour LOS
1 . North Road/SR-189	TWSC	-	21.0	C		-	12.7	B
2 . Bear Springs Road/SR-189	TWSC	-	17.8	C		-	13.3	B
3 . Grass Valley Road/SR-189	TWSC	-	>100	F	*	-	29.6	D
4 . Daley Canyon Road/SR-189	AWSC	1.16	81.2	F	*	0.75	18.2	C
5 . North Bay Road/SR-189	AWSC	0.67	18.9	C		0.52	13.5	B
6 . Lake Gregory Drive/SR-189	TWSC	-	19.7	C		-	21.3	C
7 . Lake Gregory Drive/SR-18	TWSC	-	39.6	E	*	-	16.4	C
8 . Bear Springs Road/SR-18	TWSC	-	29.6	D		-	20.0	C
9 . Project Access/SR-18		*Future Intersection*				*Future Intersection*		
10 . Daley Canyon Road/SR-18	TWSC	-	18.1	C		-	20.9	C
11 . Daley Cnyn Rd/Daley Cnyn Access	TWSC	-	12.3	B		-	12.0	B
12 . Daley Canyon Access Road/SR-18	TWSC	-	39.3	E	*	-	31.2	D
13 . SR-173/SR-18	TWSC	-	>100	F	*	-	18.1	C

* Exceeds LOS standard

Notes:

V/C = Volume/Capacity Ratio
LOS = Level of Service
AWSC = All-Way Stop Control
TWSC = Two-Way Stop Control
For TWSC intersections, reported delay is for worst-case approach.

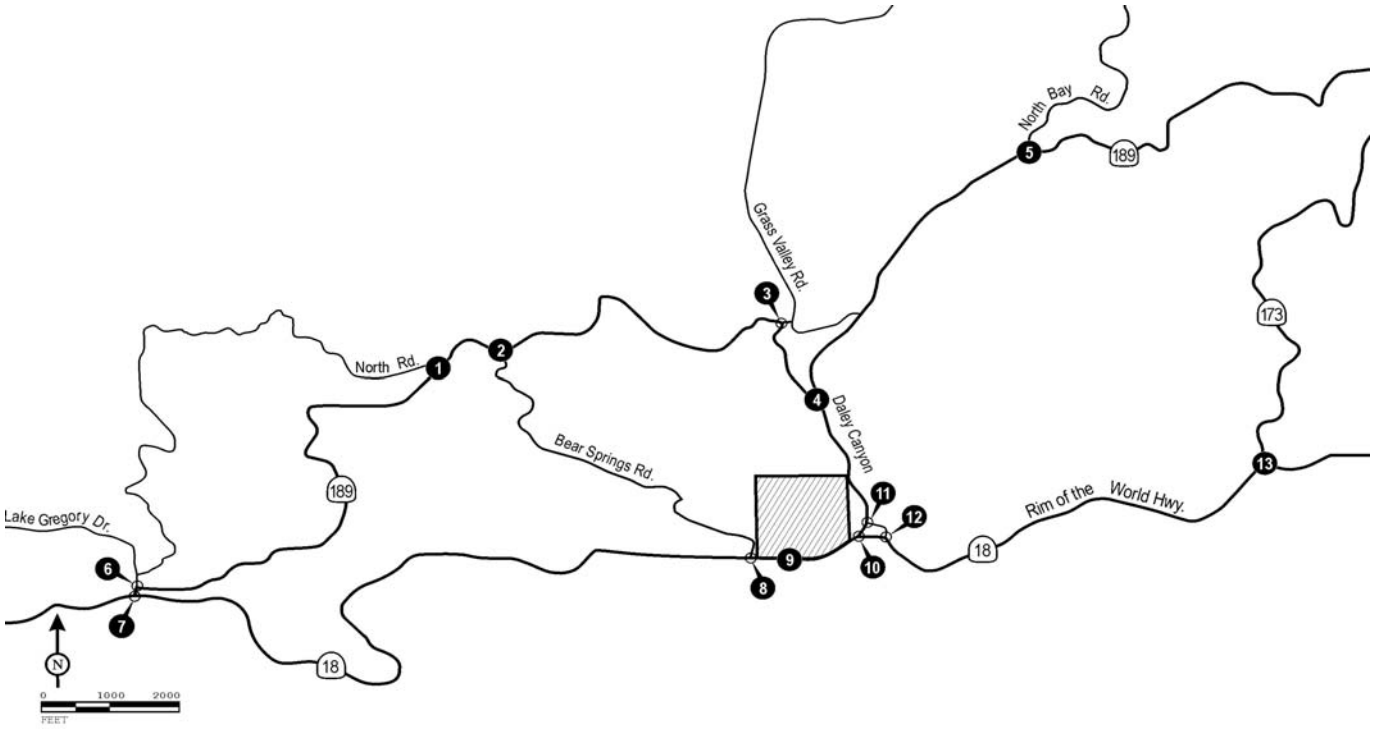

1 North Road/SR-189

52 / 53
171 / 99
143 / 87
162 / 153
38 / 37
168 / 83

2 Bear Springs Road/SR-189

62 / 59
11 / 11
36 / 35
33 / 19
219 / 185
11 / 12
66 / 42
221 / 147
34 / 29
23 / 20
14 / 14
15 / 10

3 Grass Valley Road/SR-189

250 / 170
363 / 347
190 / 145
86 / 54
122 / 70
211 / 160

4 Daley Canyon Road/SR-189

76 / 40
260 / 318
313 / 187
287 / 303
195 / 145
348 / 204

5 North Bay Road/SR-189

281 / 261
140 / 75
105 / 82
224 / 217
298 / 191
328 / 223

6 Lake Gregory Drive/SR-189

278 / 167
103 / 65
84 / 75
73 / 154
206 / 145
67 / 40

7 Lake Gregory Drive/SR-18

92 / 156
260 / 165
157 / 130
460 / 516
116 / 55
450 / 280

8 Bear Springs Road/SR-18

32 / 20
0 / 3
46 / 31
30 / 32
709 / 596
10 / 11
48 / 17
766 / 550
1 / 14
1 / 16
4 / 16

9 Project Access/SR-18

11 / 58
20 / 109
18 / 109
715 / 673
10 / 58
824 / 473

10 Daley Canyon Road/SR-18

387 / 440
346 / 342
358 / 271
486 / 311

11 Daley Cnyn Rd/Daley Cnyn Access

387 / 440
171 / 186
165 / 149
358 / 271

12 Daley Canyon Access Road/SR-18

171 / 186
165 / 149
346 / 342
486 / 311

13 SR-173/SR-18

154 / 170
89 / 47
94 / 123
264 / 182
264 / 252
311 / 178

FIGURE 10

Saturday / Sunday Peak Hour Volume

Church of the Woods

Year 2009 With Project Traffic Volumes

Table G - Year 2009 With Project Intersection Levels of Service

Intersection	Control	Saturday Peak Hour V/C	Saturday Peak Hour Delay (sec.)	Saturday Peak Hour LOS		Sunday Peak Hour V/C	Sunday Peak Hour Delay (sec.)	Sunday Peak Hour LOS	
1 . North Road/SR-189	TWSC	-	21.2	C		-	13.0	B	
2 . Bear Springs Road/SR-189	TWSC	-	18.2	C		-	14.0	B	
3 . Grass Valley Road/SR-189	TWSC	-	>100	F	*	-	36.4	E	*
4 . Daley Canyon Road/SR-189	AWSC	1.17	86.1	F	*	0.83	24.9	C	
5 . North Bay Road/SR-189	AWSC	0.68	19.4	C		0.57	15.0	B	
6 . Lake Gregory Drive/SR-189	TWSC	-	20.0	C		-	25.0	C	
7 . Lake Gregory Drive/SR-18	TWSC	-	41.6	E	*	-	17.6	C	
8 . Bear Springs Road/SR-18	TWSC	-	31.3	D		-	30.3	D	
9 . Project Access/SR-18	TWSC	-	16.9	C		-	19.0	C	
10 . Daley Canyon Road/SR-18	TWSC	-	18.9	C		-	36.0	E	*
11 . Daley Cnyn Rd/Daley Cnyn Access	TWSC	-	12.4	B		-	13.2	B	
12 . Daley Canyon Access Road/SR-18	TWSC	-	41.4	E	*	-	44.2	E	*
13 . SR-173/SR-18	TWSC	-	>100	F	*	-	20.6	C	

* Exceeds LOS standard

Notes:

V/C = Volume/Capacity Ratio
LOS = Level of Service
AWSC = All-Way Stop Control
TWSC = Two-Way Stop Control
For TWSC intersections, reported delay is for worst-case approach.

Year 2013 Without Project Conditions

Figure 11 illustrates the year 2013 without project Saturday and Sunday peak hour turn volumes at the study area intersections. An LOS analysis was conducted to determine projected circulation system performance. The year 2013 without project levels of service for the study area intersections are summarized in Table H. The level of service calculation sheets are contained in Appendix C.

As indicated in Table H, all intersections examined are projected to operate at satisfactory levels of service under year 2013 without project conditions, with the exception of the following:

- Grass Valley Road/SR-189 (Saturday and Sunday peak hours);
- Daley Canyon Road/SR-189 (Saturday peak hour);
- Lake Gregory Drive/SR-18 (Saturday peak hour);
- Daley Canyon Access Road/SR-18 (Saturday and Sunday peak hours); and
- SR-173/SR-18 (Saturday peak hour).

Year 2013 With Project Conditions

The year 2013 with project condition considers the addition of traffic generated by the proposed project to the roadways in the project vicinity on opening day. Figure 12 illustrates the year 2013 with project Saturday and Sunday peak hour turn volumes at the study area intersections. An LOS analysis was conducted to determine projected system performance. The year 2013 with project levels of service for the study area intersections are summarized in Table I. The level of service calculation sheets are contained in Appendix C.

As indicated in Table I, all intersections examined are projected to operate at satisfactory levels of service under year 2013 with project conditions, with the exception of the following:

- Grass Valley Road/SR-189 (Saturday and Sunday peak hours);
- Daley Canyon Road/SR-189 (Saturday and Sunday peak hours);
- Lake Gregory Drive/SR-189 (Sunday peak hour);
- Lake Gregory Drive/SR-18 (Saturday peak hour);
- Bear Springs Road/SR-18 (Saturday and Sunday peak hours);
- Project Access/SR-18 (Sunday peak hour);
- Daley Canyon Road/SR-18 (Sunday peak hour);
- Daley Canyon Access Road/SR-18 (Saturday and Sunday peak hours); and
- SR-173/SR-18 (Saturday and Sunday peak hours).

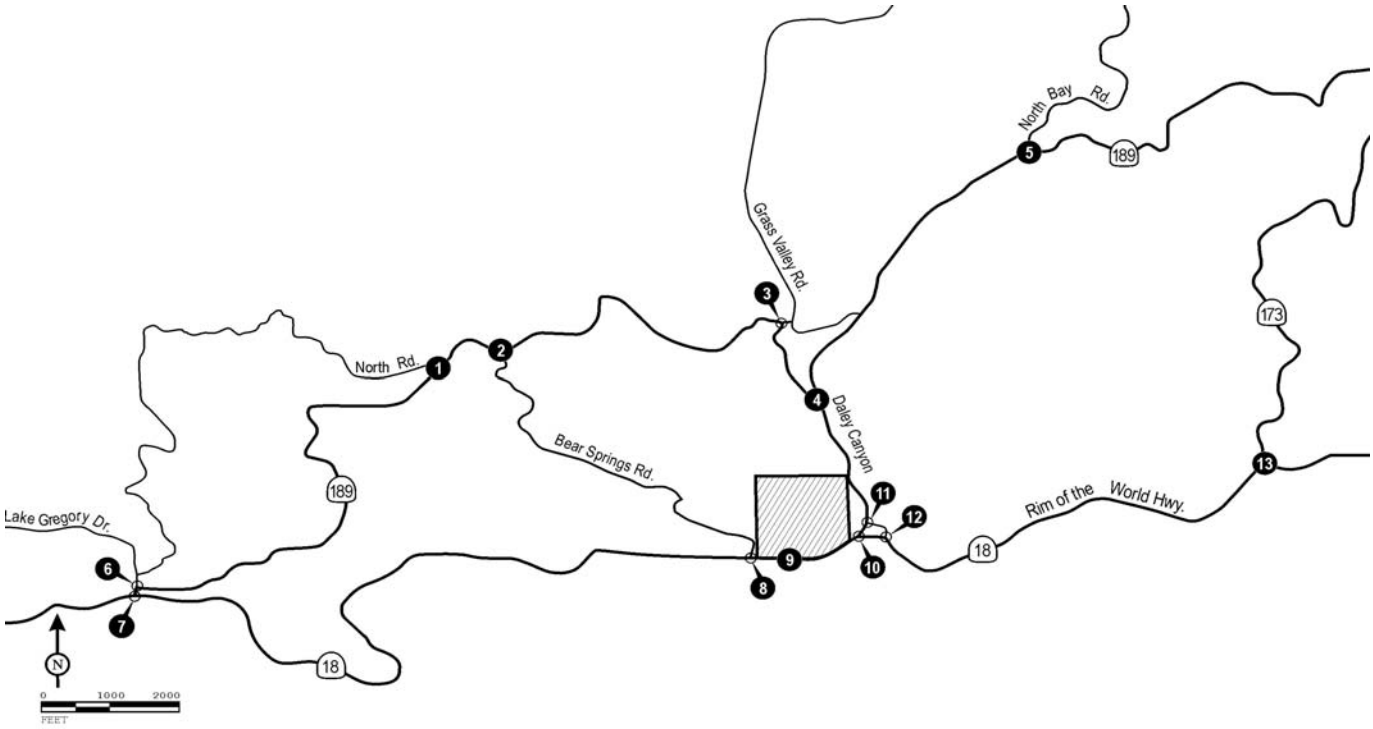

1 North Road/SR-189

	57 / 58	187 / 100
	↩ ↪	↰ 155 / 86
		← 169 / 161
42 / 41 ↱		
176 / 87 →		

2 Bear Springs Road/SR-189

	68 / 65	12 / 12	39 / 38
	↩	↓	↪ ↰ 36 / 21
			← 229 / 195
			↲ 12 / 13
73 / 46 ↱			
232 / 154 →			
36 / 23 ↳			
	23 / 13	16 / 16	16 / 11
	↰	↑	↱

3 Grass Valley Road/SR-189

	274 / 186	386 / 346
	↩ ↪	↰ 200 / 129
		← 90 / 57
133 / 76 ↱		
221 / 167 →		

4 Daley Canyon Road/SR-189

	79 / 42	278 / 303	
	↩	↓	
328 / 196 ↱			
302 / 298 ↳			
	205 / 129	374 / 178	
	↰	↑	

5 North Bay Road/SR-189

	305 / 268	154 / 82
	↩ ↪	↰ 115 / 90
		← 231 / 202
324 / 191 ↱		
339 / 208 →		

6 Lake Gregory Drive/SR-189

	288 / 148	107 / 69	
	↓	↪	↰ 88 / 79
			↲ 76 / 162
	210 / 125	71 / 42	
	↑	↱	

7 Lake Gregory Drive/SR-18

	96 / 163	268 / 147
	↩ ↪	↰ 160 / 109
		← 475 / 520
121 / 58 ↱		
467 / 274 →		

8 Bear Springs Road/SR-18

	35 / 22	0 / 4	47 / 15	
	↩	↓	↪	↰ 29 / 16
				← 731 / 577
				↲ 11 / 12
53 / 19 ↱				
794 / 531 →				
1 / 15 ↳				
	1 / 17		5 / 17	
	↰		↱	

9 Project Access/SR-18

	← 760 / 717
878 / 504 →	

10 Daley Canyon Road/SR-18

	405 / 403	
	↩	← 355 / 314
377 / 222 ↱		
501 / 282 →		

11 Daley Cnyn Rd/Daley Cnyn Access

	405 / 403	186 / 204
	↓	↪ ↰ 180 / 163
	377 / 222	
	↑	

12 Daley Canyon Access Road/SR-18

	186 / 204	
	↪	↰ 180 / 163
		← 355 / 314
501 / 282 →		

13 SR-173/SR-18

	165 / 159	98 / 52
	↩ ↪	↰ 104 / 135
		← 275 / 182
285 / 249 ↱		
323 / 177 →		

FIGURE 11

Table H - Year 2013 Without Project Intersection Levels of Service

Intersection	Control	Saturday Peak Hour V/C	Saturday Peak Hour Delay (sec.)	Saturday Peak Hour LOS		Sunday Peak Hour V/C	Sunday Peak Hour Delay (sec.)	Sunday Peak Hour LOS	
1 . North Road/SR-189	TWSC	-	25.7	D		-	13.4	B	
2 . Bear Springs Road/SR-189	TWSC	-	19.7	C		-	13.9	B	
3 . Grass Valley Road/SR-189	TWSC	-	>100	F	*	-	40.8	E	*
4 . Daley Canyon Road/SR-189	AWSC	1.23	>100	F	*	0.82	22.3	C	
5 . North Bay Road/SR-189	AWSC	0.74	22.3	C		0.58	14.8	B	
6 . Lake Gregory Drive/SR-189	TWSC	-	21.5	C		-	24.3	C	
7 . Lake Gregory Drive/SR-18	TWSC	-	50.4	F	*	-	17.3	C	
8 . Bear Springs Road/SR-18	TWSC	-	34.4	D		-	21.8	C	
9 . Project Access/SR-18		*Future Intersection*				*Future Intersection*			
10 . Daley Canyon Road/SR-18	TWSC	-	20.5	C		-	25.1	D	
11 . Daley Cnyn Rd/Daley Cnyn Access	TWSC	-	13.0	B		-	12.7	B	
12 . Daley Canyon Access Road/SR-18	TWSC	-	52.9	F	*	-	41.7	E	*
13 . SR-173/SR-18	TWSC	-	>100	F	*	-	21.7	C	

* Exceeds LOS standard

Notes:

V/C = Volume/Capacity Ratio
LOS = Level of Service
AWSC = All-Way Stop Control
TWSC = Two-Way Stop Control
For TWSC intersections, reported delay is for worst-case approach.

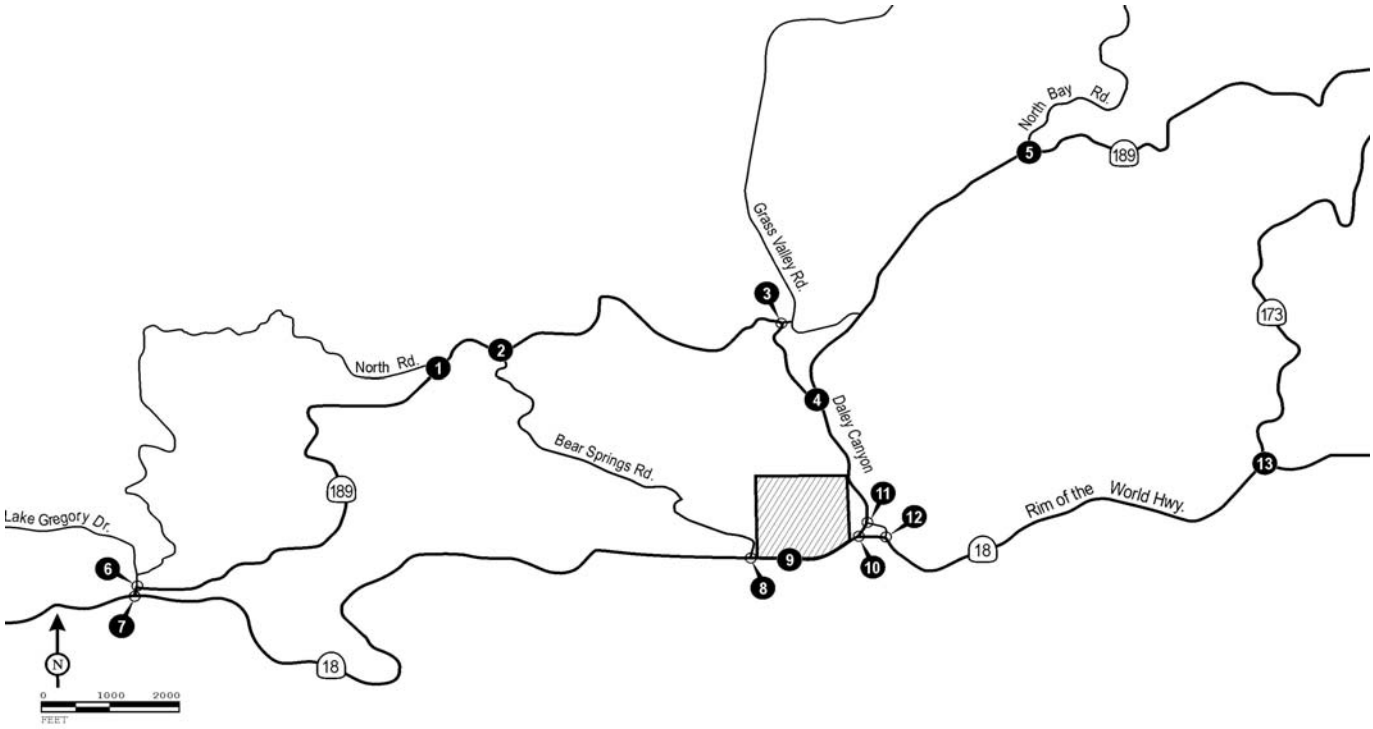

1 North Road/SR-189

	57 / 58	188 / 120
	↩	↱ 157 / 106
	↩	↳ ← 169 / 161
42 / 41 ↱		
176 / 87 →		

2 Bear Springs Road/SR-189

	68 / 65	12 / 12	39 / 38
	↩	↓	↳ ↱ 12 / 13
73 / 46 ↱			
232 / 154 →			
37 / 43 ↳			

↰	↑	↱
25 / 33	16 / 16	16 / 11

3 Grass Valley Road/SR-189

	274 / 186	390 / 406
	↩	↳ ← 205 / 189
133 / 76 ↱		
221 / 167 →		

4 Daley Canyon Road/SR-189

	79 / 42	285 / 403
	↩	↓
328 / 196 ↱		
306 / 358 ↳		

↰	↑
210 / 189	382 / 278

5 North Bay Road/SR-189

	308 / 308	154 / 82
	↩	↳ ↱ 115 / 90
	↩	↳ ← 235 / 262
327 / 231 ↱		
344 / 268 →		

6 Lake Gregory Drive/SR-189

	292 / 208	107 / 69
	↓	↳ ↱ 88 / 79
	↓	↳ ↲ 76 / 162

215 / 185 →	71 / 42 ↱

7 Lake Gregory Drive/SR-18

	96 / 163	272 / 207
	↩	↳ ↱ 165 / 169
	↩	↳ ← 478 / 560
121 / 58 ↱		
470 / 314 →		

8 Bear Springs Road/SR-18

	35 / 22	0 / 4	50 / 55
	↩	↓	↳ ↱ 32 / 56
	↩	↓	↳ ← 739 / 677
	↩	↓	↳ ↲ 11 / 12
53 / 19 ↱			
801 / 631 →			
1 / 15 ↳			

↰	↱
1 / 17	5 / 17

9 Project Access/SR-18

	11 / 140	20 / 260
	↩	↳ ↱ 18 / 260
	↩	↳ ← 760 / 717
10 / 140 ↱		
878 / 504 →		

10 Daley Canyon Road/SR-18

	416 / 563	
	↩	← 362 / 414
389 / 382 ↱		
509 / 382 →		

11 Daley Cnyn Rd/Daley Cnyn Access

	416 / 563	186 / 204
	↓	↳ ↱ 180 / 163
		389 / 382 →

12 Daley Canyon Access Road/SR-18

	186 / 204	
	↳	↱ 180 / 163
	↳	← 362 / 414
509 / 382 →		

13 SR-173/SR-18

	169 / 219	98 / 52
	↩	↳ ↱ 104 / 135
	↩	↳ ← 276 / 202
290 / 309 ↱		
325 / 197 →		

FIGURE 12

Saturday / Sunday Peak Hour Volume

Church of the Woods

Year 2013 With Project Traffic Volumes

Table I - Year 2013 With Project Intersection Levels of Service

Intersection	Control	Saturday Peak Hour V/C	Saturday Peak Hour Delay (sec.)	Saturday Peak Hour LOS		Sunday Peak Hour V/C	Sunday Peak Hour Delay (sec.)	Sunday Peak Hour LOS	
1 . North Road/SR-189	TWSC	-	26.0	D		-	14.3	B	
2 . Bear Springs Road/SR-189	TWSC	-	20.2	C		-	15.8	C	
3 . Grass Valley Road/SR-189	TWSC	-	>100	F	*	-	75.8	F	*
4 . Daley Canyon Road/SR-189	AWSC	1.24	>100	F	*	1.04	68.5	F	*
5 . North Bay Road/SR-189	AWSC	0.75	22.9	C		0.71	20.2	C	
6 . Lake Gregory Drive/SR-189	TWSC	-	21.9	C		-	40.1	E	*
7 . Lake Gregory Drive/SR-18	TWSC	-	53.3	F	*	-	21.6	C	
8 . Bear Springs Road/SR-18	TWSC	-	36.7	E	*	-	93.1	F	*
9 . Project Access/SR-18	TWSC	-	17.8	C		-	85.5	F	*
10 . Daley Canyon Road/SR-18	TWSC	-	21.8	C		-	>100	F	*
11 . Daley Cnyn Rd/Daley Cnyn Access	TWSC	-	13.2	B		-	16.8	C	
12 . Daley Canyon Access Road/SR-18	TWSC	-	56.4	F	*	-	>100	F	*
13 . SR-173/SR-18	TWSC	-	>100	F	*	-	37.3	E	*

* Exceeds LOS standard

Notes:

V/C = Volume/Capacity Ratio
LOS = Level of Service
AWSC = All-Way Stop Control
TWSC = Two-Way Stop Control
For TWSC intersections, reported delay is for worst-case approach.

FORECAST YEAR 2030 CONDITIONS

Forecast year 2030 traffic volumes were developed using the approach discussed under the Analysis Methodology section. The analysis of 2030 conditions is based on the existing circulation system, with no improvements anticipated other than those that are part of the project.

Year 2030 Without Project Conditions

Figure 13 illustrates the year 2030 without project Saturday and Sunday peak hour turn volumes at the study area intersections. An LOS analysis was conducted to determine projected circulation system performance. The year 2030 without project levels of service for the study area intersections are summarized in Table J. The level of service calculation sheets are contained in Appendix C.

As indicated in Table J, all intersections examined are projected to operate at satisfactory levels of service under year 2030 without project conditions, with the exception of the following:

- North Road/SR-189 (Saturday peak hour);
- Grass Valley Road/SR-189 (Saturday and Sunday peak hours);
- Daley Canyon Road/SR-189 (Saturday and Sunday peak hours);
- North Bay Road/SR-189 (Saturday peak hour);
- Lake Gregory Drive/SR-18 (Saturday peak hour);
- Bear Springs Road/SR-18 (Saturday peak hour);
- Daley Canyon Road/SR-18 (Saturday and Sunday peak hours);
- Daley Canyon Access Road/SR-18 (Saturday and Sunday peak hours); and
- SR-173/SR-18 (Saturday and Sunday peak hours).

Year 2030 With Project Conditions

The year 2030 with project condition considers the addition of traffic generated by the proposed project to the roadways in the project vicinity in a future plan year. Figure 14 illustrates the year 2030 with project Saturday and Sunday peak hour turn volumes at the study area intersections. An LOS analysis was conducted to determine projected circulation system performance. The year 2030 with project levels of service for the study area intersections are summarized in Table K. The level of service calculation sheets are contained in Appendix C.

As indicated in Table K, all intersections examined are projected to operate at satisfactory levels of service under year 2030 with project conditions, with the exception of the following:

- North Road/SR-189 (Saturday peak hour);
- Grass Valley Road/SR-189 (Saturday and Sunday peak hours);
- Daley Canyon Road/SR-189 (Saturday and Sunday peak hours);

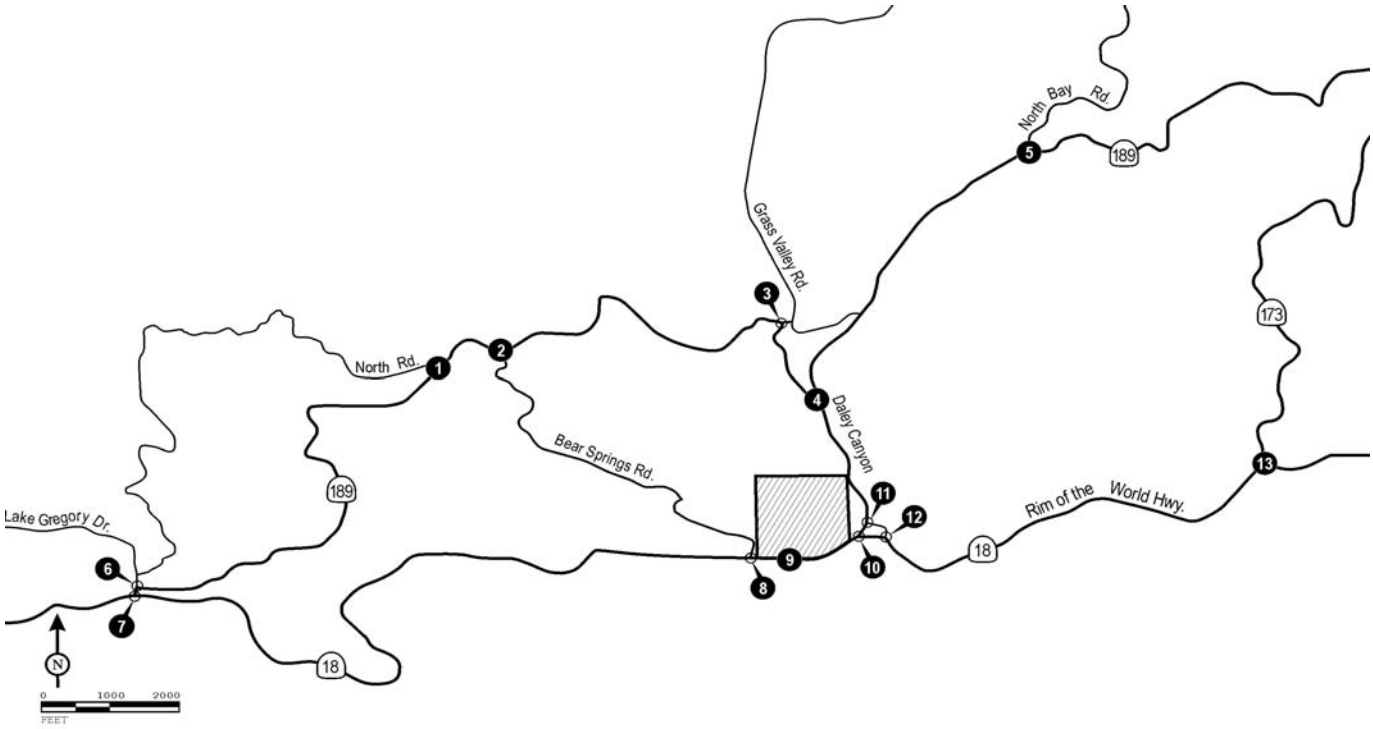

1 North Road/SR-189

87 / 88 ↓
286 / 154 ↳
237 / 133 ↰
205 / 195 ←
64 / 62 ⤴
214 / 105 →

2 Bear Springs Road/SR-189

104 / 99 ↲
23 / 23 ↓
60 / 58 ↳
55 / 32 ↰
279 / 237 ←
17 / 19 ↙
111 / 71 ⤴
284 / 189 →
54 / 34 ⤵
35 / 19 ↖
30 / 30 ↑
24 / 15 ↗

3 Grass Valley Road/SR-189

416 / 283 ↲
543 / 486 ↳
288 / 181 ↰
110 / 69 ←
203 / 115 ⤴
270 / 204 →

4 Daley Canyon Road/SR-189

97 / 51 ↲
426 / 465 ↓
401 / 240 ⤴
415 / 412 ⤵
298 / 184 ↖
572 / 272 ↑

5 North Bay Road/SR-189

468 / 410 ↲
235 / 126 ↳
177 / 138 ↰
281 / 246 ←
496 / 293 ⤴
412 / 253 →

6 Lake Gregory Drive/SR-189

351 / 181 ↓
131 / 84 ↳
107 / 96 ↰
93 / 198 ↙
257 / 153 →
86 / 51 ↱

7 Lake Gregory Drive/SR-18

118 / 199 ↲
327 / 179 ↳
195 / 133 ↰
562 / 619 ←
148 / 71 ⤴
565 / 329 →

8 Bear Springs Road/SR-18

53 / 34 ↲
0 / 7 ↓
73 / 23 ↳
44 / 25 ↰
875 / 688 ←
16 / 18 ↙
82 / 29 ⤴
964 / 643 →
2 / 23 ⤵
2 / 27 ↖
7 / 27 ↱

9 Project Access/SR-18

1011 / 961 ←
1176 / 672 →

10 Daley Canyon Road/SR-18

577 / 577 ↲
434 / 384 ←
564 / 327 ⤴
612 / 345 →

11 Daley Cnyn Rd/Daley Cnyn Access

577 / 577 ↓
280 / 307 ↳
274 / 249 ↰
564 / 327 →

12 Daley Canyon Access Road/SR-18

280 / 307 ↳
274 / 249 ↰
434 / 384 ←
612 / 345 →

13 SR-173/SR-18

253 / 244 ↲
150 / 80 ↳
159 / 207 ↰
335 / 222 ←
437 / 382 ⤴
393 / 215 →

FIGURE 13

Saturday / Sunday Peak Hour Volume

Church of the Woods

Year 2030 Without Project Traffic Volumes

R:\CTW430\July 2008\g-30_13_2030 np (7/8/2008)

Table J - Year 2030 Without Project Intersection Levels of Service

Intersection	Control	Saturday Peak Hour V/C	Saturday Peak Hour Delay (sec.)	Saturday Peak Hour LOS		Sunday Peak Hour V/C	Sunday Peak Hour Delay (sec.)	Sunday Peak Hour LOS	
1 . North Road/SR-189	TWSC	-	53.7	F	*	-	16.2	C	
2 . Bear Springs Road/SR-189	TWSC	-	30.0	D		-	17.7	C	
3 . Grass Valley Road/SR-189	TWSC	-	>100	F	*	-	>100	F	*
4 . Daley Canyon Road/SR-189	AWSC	1.76	>100	F	*	1.22	89.2	F	*
5 . North Bay Road/SR-189	AWSC	1.15	61.5	F	*	0.76	21.6	C	
6 . Lake Gregory Drive/SR-189	TWSC	-	23.9	C		-	19.5	C	
7 . Lake Gregory Drive/SR-18	TWSC	-	>100	F	*	-	19.8	C	
8 . Bear Springs Road/SR-18	TWSC	-	91.6	F	*	-	21.9	C	
9 . Project Access/SR-18		*Future Intersection*				*Future Intersection*			
10 . Daley Canyon Road/SR-18	TWSC	-	62.3	F	*	-	46.0	E	*
11 . Daley Cnyn Rd/Daley Cnyn Access	TWSC	-	20.9	C		-	13.1	B	
12 . Daley Canyon Access Road/SR-18	TWSC	-	>100	F	*	-	52.9	F	*
13 . SR-173/SR-18	TWSC	-	>100	F	*	-	66.5	F	*

* Exceeds LOS standard

Notes:

V/C = Volume/Capacity Ratio
LOS = Level of Service
AWSC = All-Way Stop Control
TWSC = Two-Way Stop Control
For TWSC intersections, reported delay is for worst-case approach.

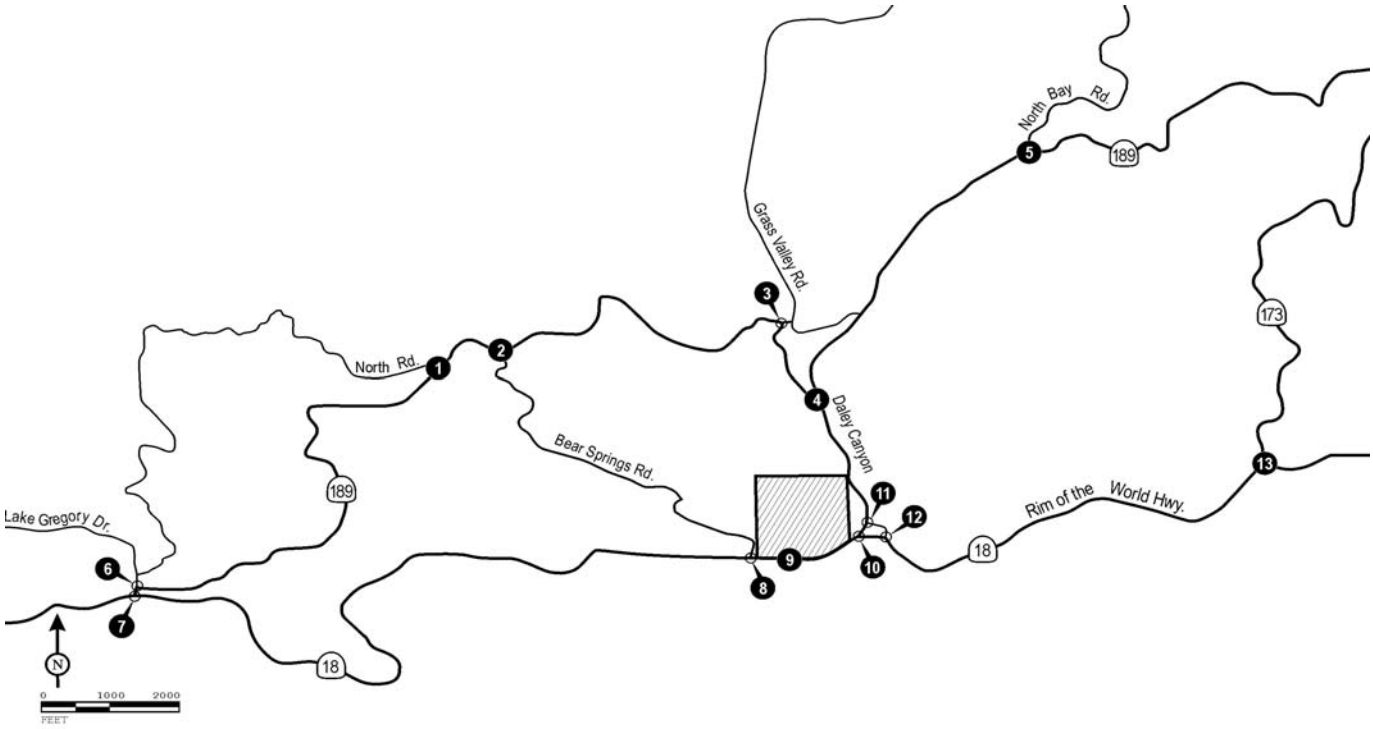

1 North Road/SR-189

87 / 88 ↓
287 / 174 ↳
239 / 153 ↰
205 / 195 ←
64 / 62 ⤴
214 / 105 →

2 Bear Springs Road/SR-189

104 / 99 ↳
23 / 23 ↓
60 / 58 ↳
55 / 32 ↰
279 / 237 ←
17 / 19 ↲
111 / 71 ⤴
284 / 189 →
55 / 54 ⤵
37 / 39 ↰
30 / 30 ↑
24 / 15 ↱

3 Grass Valley Road/SR-189

416 / 283 ↳
547 / 546 ↳
293 / 241 ↰
110 / 69 ←
203 / 115 ⤴
270 / 204 →

4 Daley Canyon Road/SR-189

97 / 51 ↳
433 / 565 ↓
401 / 240 ⤴
419 / 472 ⤵
303 / 244 ↰
580 / 372 ↑

5 North Bay Road/SR-189

471 / 450 ↳
235 / 126 ↳
177 / 138 ↰
285 / 306 ←
499 / 333 ⤴
417 / 313 →

6 Lake Gregory Drive/SR-189

355 / 241 ↓
131 / 84 ↳
107 / 96 ↰
93 / 198 ↲
262 / 213 →
86 / 51 ↱

7 Lake Gregory Drive/SR-18

118 / 199 ↳
331 / 239 ↳
200 / 193 ↰
565 / 659 ←
148 / 71 ⤴
568 / 369 →

8 Bear Springs Road/SR-18

53 / 34 ↳
0 / 7 ↓
76 / 63 ↳
47 / 65 ↰
883 / 788 ←
16 / 18 ↲
82 / 29 ⤴
971 / 743 →
2 / 23 ⤵
2 / 27 ↰
7 / 27 ↱

9 Project Access/SR-18

11 / 140 ↳
20 / 260 ↳
18 / 260 ↰
1011 / 961 ←
10 / 140 ⤴
1176 / 672 →

10 Daley Canyon Road/SR-18

588 / 737 ↳
441 / 484 ←
576 / 487 ⤴
620 / 445 →

11 Daley Cnyn Rd/Daley Cnyn Access

588 / 737 ↓
280 / 307 ↳
274 / 249 ↰
576 / 487 →

12 Daley Canyon Access Road/SR-18

280 / 307 ↳
274 / 249 ↰
441 / 484 ←
620 / 445 →

13 SR-173/SR-18

257 / 304 ↳
150 / 80 ↳
159 / 207 ↰
336 / 242 ←
442 / 442 ⤴
395 / 235 →

FIGURE 14

Saturday / Sunday Peak Hour Volume

Church of the Woods

Year 2030 With Project Traffic Volumes

Table K - Year 2030 With Project Intersection Levels of Service

Intersection	Control	Saturday Peak Hour V/C	Saturday Peak Hour Delay (sec.)	Saturday Peak Hour LOS		Sunday Peak Hour V/C	Sunday Peak Hour Delay (sec.)	Sunday Peak Hour LOS	
1 . North Road/SR-189	TWSC	-	54.5	F	*	-	17.6	C	
2 . Bear Springs Road/SR-189	TWSC	-	30.8	D		-	20.2	C	
3 . Grass Valley Road/SR-189	TWSC	-	>100	F	*	-	>100	F	*
4 . Daley Canyon Road/SR-189	AWSC	1.79	>100	F	*	1.34	>100	F	*
5 . North Bay Road/SR-189	AWSC	1.16	63.4	F	*	0.88	32.0	D	
6 . Lake Gregory Drive/SR-189	TWSC	-	24.4	C		-	25.9	D	
7 . Lake Gregory Drive/SR-18	TWSC	-	>100	F	*	-	25.8	D	
8 . Bear Springs Road/SR-18	TWSC	-	>100	F	*	-	41.2	E	*
9 . Project Access/SR-18	TWSC	-	22.9	C		-	>100	F	*
10 . Daley Canyon Road/SR-18	TWSC	-	70.2	F	*	-	>100	F	*
11 . Daley Cnyn Rd/Daley Cnyn Access	TWSC	-	21.5	C		-	16.7	C	
12 . Daley Canyon Access Road/SR-18	TWSC	-	>100	F	*	-	>100	F	*
13 . SR-173/SR-18	TWSC	-	>100	F	*	-	>100	F	*

* Exceeds LOS standard

Notes:

V/C = Volume/Capacity Ratio
LOS = Level of Service
AWSC = All-Way Stop Control
TWSC = Two-Way Stop Control
For TWSC intersections, reported delay is for worst-case approach.

- North Bay Road/SR-189 (Saturday peak hour);
- Lake Gregory Drive/SR-18 (Saturday peak hour);
- Bear Springs Road/SR-18 (Saturday peak hour);
- Project Access/SR-18 (Sunday peak hour);
- Daley Canyon Road/SR-18 (Saturday and Sunday peak hours);
- Daley Canyon Access Road/SR-18 Saturday and Sunday peak hours); and
- SR-173/SR-18 (Saturday and Sunday peak hours).

It should be noted that, with the exception of the project driveway, all of the above intersections operate at an unsatisfactory level of service under year 2030 without project conditions.

PROJECT CONTRIBUTION TO TOTAL NEW VOLUMES

The contribution of project increment traffic to total new traffic was determined for all study area key intersections. Table L summarizes the project contribution to the intersections for year 2030.

Peak hour project traffic is the total project traffic volume at each study area intersection, as described in the "Project Traffic" section, above. The total new traffic is the difference between the year 2009, 2013 or 2030 with project traffic volumes and the existing (2007) peak hour traffic volumes. The project percentage contribution to total new traffic is calculated by dividing the project traffic by the total new traffic.

These calculations are required by the County and consider only the growth in traffic up to the levels of the SCAG estimates for population housing and employment for 2030. In an ultimate General Plan build out horizon, growth in traffic may exceed these volumes, reducing the percentage of contribution of the proposed project. Therefore, these percentages should be evaluated in this context before application to mitigation costs to reflect the total project fair-share contribution.

CIRCULATION IMPROVEMENTS

At any intersection where project development is forecast to have an impact, the County requires that improvements be identified as mitigation measures. For intersections that meet a jurisdiction's minimum level of service standard under existing (2007) conditions, the mitigation measures must maintain conformance with that standard.

Year 2009 Intersection Improvements

Under year 2009 with project conditions, five locations will not meet the appropriate level of service standard during either the Saturday or Sunday peak hour. The following modifications to intersection lane configurations and/or stop control are required in order to maintain the relevant LOS standard:

- Grass Valley Road/SR-189: Install a traffic signal.

Table L - Year 2030 Project Contribution to Analysis Intersections

Intersection	Saturday Peak Hour			Sunday Peak Hour		
	Project Trips	Total New Trips	Project Percent	Project Trips	Total New Trips	Project Percent
1 . North Road/SR-189	3	401	0.7%	40	306	13.1%
2 . Bear Springs Road/SR-189	3	372	0.8%	40	327	12.2%
3 . Grass Valley Road/SR-189	9	804	1.1%	120	716	16.8%
4 . Daley Canyon Road/SR-189	24	954	2.5%	320	1,031	31.0%
5 . North Bay Road/SR-189	15	782	1.9%	200	744	26.9%
6 . Lake Gregory Drive/SR-189	9	251	3.6%	120	301	39.9%
7 . Lake Gregory Drive/SR-18	15	551	2.7%	200	637	31.4%
8 . Bear Springs Road/SR-18	21	661	3.2%	280	765	36.6%
10 . Daley Canyon Road/SR-18	46	1,122	4.1%	620	1,461	42.4%
11 . Daley Cnyn Rd/Daley Cnyn Access						
12 . Daley Canyon Access Road/SR-18						
13 . SR-173/SR-18	12	629	1.9%	160	670	23.9%

Notes:

The project is responsible for improvements at the project access on State Route 18 (Intersection 9).

Intersections 10, 11, and 12 have been treated as a single intersection for purposes of calculating project contribution.

- Daley Canyon Road/SR-189: Add an eastbound right-turn lane and a northbound left-turn lane. These improvements may require additional right-of-way.
- Lake Gregory Drive/SR-18: Install traffic signals on Lake Gregory Drive at SR-18 and SR-189 and coordinate the signals. Add a southbound left-turn lane at SR-189/Lake Gregory Drive.
- Daley Canyon Road/SR-18: Install a traffic signal. The signal should be interconnected with the signal at Daley Canyon Access Road/SR-18. The signal should provide an overlap phase for southbound right-turn movements so that they can move concurrently with eastbound left turns. This improvement is required to mitigate the intersection of Daley Canyon Access Road/SR-18.
- Daley Canyon Road/Daley Canyon Access Road: Add a southbound left-turn lane. This improvement is required to allow left-turning vehicles to stack without blocking through movements. This improvement is required to mitigate the intersection of Daley Canyon Access Road/SR-18. This improvement may require additional right-of-way.
- Daley Canyon Access Road/SR-18: Install a traffic signal. Traffic signal should be interconnected with the signal at Daley Canyon Road/SR-18.
- SR-173/SR-18: Install a traffic signal.

Figure 15 illustrates the intersection geometrics resulting from implementation of the above improvements. Peak hour traffic signal warrants for the intersections at which signalization are recommended are included in Appendix E.

Year 2013 Intersection Improvements

Under year 2013 with project conditions, five locations will not meet the appropriate level of service standard during either the Saturday or Sunday peak hour. The following modifications to intersection lane configurations and/or stop control are required in order to maintain the relevant LOS standard:

- Grass Valley Road/SR-189: Install a traffic signal.
- Daley Canyon Road/SR-189: Add an eastbound right-turn lane and a northbound left-turn lane. These improvements may require additional right-of-way.
- Lake Gregory Drive/SR-18: Install traffic signals on Lake Gregory Drive at SR-18 and SR-189 and coordinate the signals. Add a southbound left-turn lane at SR-189/Lake Gregory Drive.
- Bear Springs Road/SR-18: Install a traffic signal.
- Project Access/SR-18: Install a traffic signal. The project is responsible for installing the traffic signal.
- Daley Canyon Road/SR-18: Install a traffic signal. The signal should be interconnected with the signal at Daley Canyon Access Road/SR-18. The signal should provide an overlap phase for southbound right-turn movements so that they can move concurrently with eastbound left turns. This improvement is required to mitigate the intersection of Daley Canyon Access Road/SR-18.
- Daley Canyon Road/Daley Canyon Access Road: Add a southbound left-turn lane. This improvement is required to allow left-turning vehicles to stack without blocking through movements. This improvement is required to mitigate the intersection of Daley Canyon Access Road/SR-18. This improvement may require additional right-of-way.

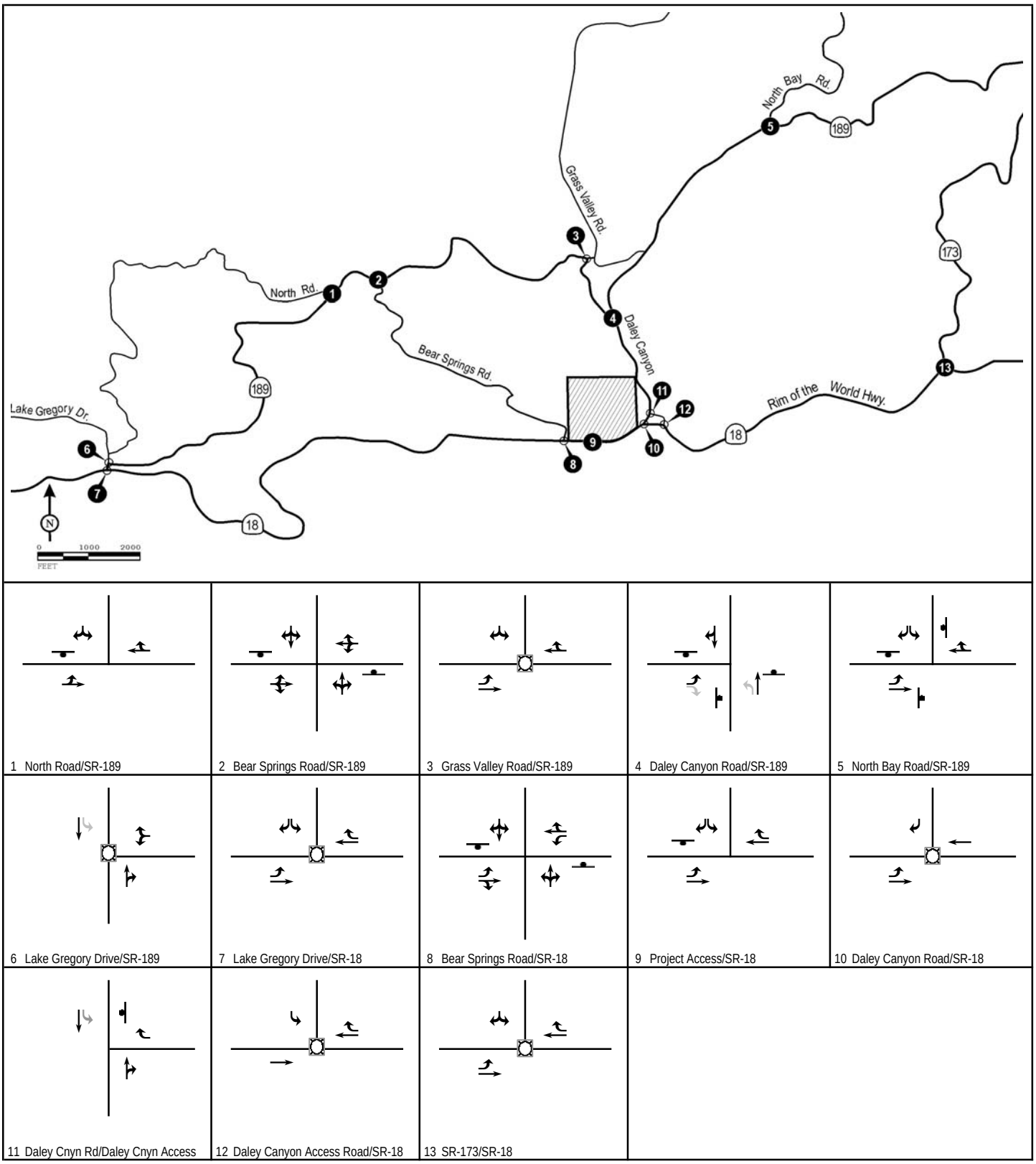

LSA

FIGURE 15

Legend

Signal

Stop Sign

Existing Turn Lane

Added Turn Lane

Church of the Woods

Intersection Geometries and Stop Control

With Year 2009 Mitigations

R:\CTW430\July 2008\g-30_15_geometrics wp 2009 improve (7/8/2008)

- Daley Canyon Access Road/SR-18: Install a traffic signal. Traffic signal should be interconnected with the signal at Daley Canyon Road/SR-18.
- SR-173/SR-18: Install a traffic signal.

Figure 16 illustrates the intersection geometrics resulting from implementation of the above improvements. Peak hour traffic signal warrants for the intersections at which signalization is recommended are included in Appendix E.

Year 2030 Intersection Improvements

Under year 2030 with project conditions, ten locations will not meet the appropriate level of service standard during either the Saturday or Sunday peak hours. The following modifications to intersection lane configurations and/or stop control are required in order to maintain the relevant LOS standard:

- North Road/SR-189: Add a dedicated southbound right-turn lane and a dedicated westbound right-turn lane. Convert the existing shared southbound left/right-turn lane to a dedicated left-turn lane. If an additional lane is not feasible, converting the two-way stop control to all-way stop control would result in a satisfactory level of service without additional lanes. These improvements may require additional right-of-way.
- Grass Valley Road/SR-189: Install a traffic signal. Add a dedicated southbound right-turn lane. Convert the existing shared southbound left/right-turn lane to a dedicated left-turn lane. These improvements may require additional right-of-way.
- Daley Canyon Road/SR-189: Install a traffic signal. Add an eastbound right-turn lane. Add a northbound left-turn lane. Convert the existing shared eastbound left/right-turn lane to a dedicated left-turn lane. These improvements may require additional right-of-way.
- North Bay Road/SR-189: Install a traffic signal.
- Lake Gregory Drive/SR-18: Install traffic signals on Lake Gregory Drive at SR-18 and SR-189 and coordinate the signals. Add a southbound left-turn lane at SR-189/Lake Gregory Drive.
- Bear Springs Road/SR-18: Install a traffic signal.
- Project Access/SR-18: Install a traffic signal. The project is responsible for installing the traffic signal.
- Daley Canyon Road/SR-18: Install a traffic signal. The signal should be interconnected with the signal at Daley Canyon Access Road/SR-18. The signal should provide an overlap phase for southbound right-turn movements so that they can move concurrently with eastbound left turns.
- Daley Canyon Road/Daley Canyon Access Road: Add a southbound left-turn lane. This improvement is required to allow left-turning vehicles to stack without blocking through movements. This improvement may require additional right-of-way.
- Daley Canyon Access Road/SR-18: Install a traffic signal. Traffic signal should be interconnected with the signal at Daley Canyon Road/SR-18.
- SR-173/SR-18: Install a traffic signal.

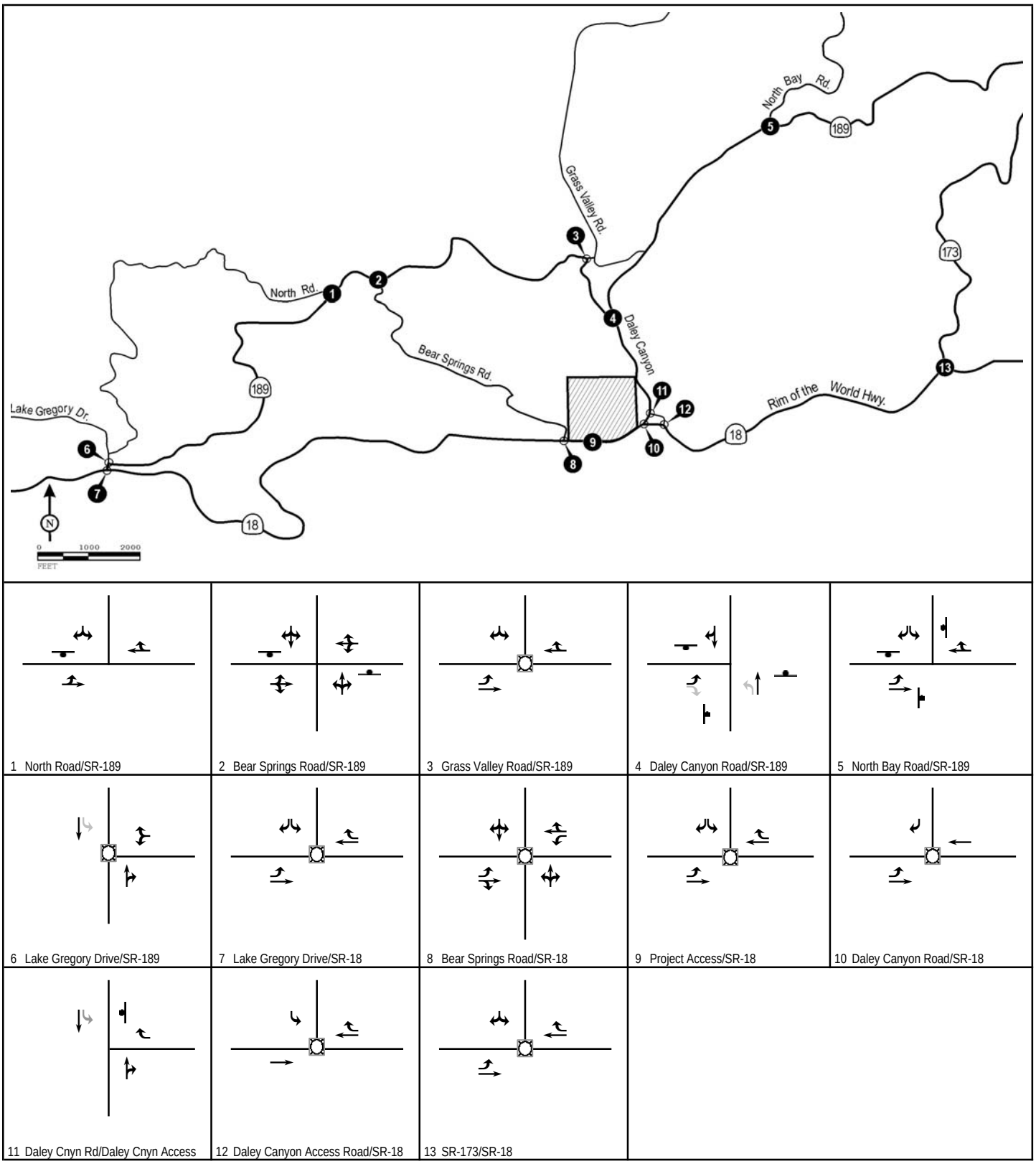

LSA

FIGURE 16

Legend

Signal

Stop Sign

Existing Turn Lane

Added Turn Lane

Church of the Woods

Intersection Geometries and Stop Control

With Year 2013 Mitigations

R:\CTW430\July 2008\g-30_16_geometrics wp 2013 improve (7/8/2008)

Currently, a two-way left-turn lane (TWLTL) is provided on SR-189 at the intersection of Grass Valley Road/SR-189; however, the TWLTL does not continue up to the intersection of Daley Canyon Road/SR-189. It is recommended that the TWLTL be constructed up to the intersection of Daley Canyon Road/SR-189. This improvement may require additional right-of-way.

Figure 17 illustrates the intersection geometrics resulting from implementation of the above improvements. Peak hour traffic signal warrants for the intersections at which signalization is recommended are included in Appendix E.

Levels of Service With Improvements

Table M presents the levels of service with the recommended intersection improvements for the 2009 with project conditions for the Saturday and Sunday peak hours. For comparison, Table M also shows the intersection levels of service without the recommended improvements. With the implementation of the recommended improvements, the minimum level of service standards are maintained at the study area intersections where a significant project impact is identified. The level of service calculation sheets for all mitigations are contained in Appendix C. It should be noted that Synchro does not include information on signal coordination in the level of service calculation sheets; however, at locations where signal coordination is recommended, the signals have been analyzed as a coordinated system in Synchro.

Table N presents the levels of service with the recommended intersection improvements for the 2013 with project conditions for the Saturday and Sunday peak hours. For comparison, Table N also shows the intersection levels of service without the recommended improvements. With the implementation of the recommended improvements, the minimum level of service standards are maintained at the study area intersections where a significant project impact is identified. The level of service calculation sheets for all mitigations are contained in Appendix C. It should be noted that Synchro does not include information on signal coordination in the level of service calculation sheets; however, at locations where signal coordination is recommended, the signals have been analyzed as a coordinated system in Synchro.

Table O presents the levels of service with the recommended intersection improvements for the 2030 with project conditions for the Saturday and Sunday peak hours. For comparison, Table O also shows the intersection levels of service without the recommended improvements. With the implementation of the recommended improvements, the minimum level of service standards are maintained at the study area intersections where a significant project impact is identified. The level of service calculation sheets for all mitigations are contained in Appendix C. It should be noted that Synchro does not include information on signal coordination in the level of service calculation sheets; however, at locations where signal coordination is recommended, the signals have been analyzed as a coordinated system in Synchro.

Alternative Mitigation Measures

Under the direction of County staff, alternative mitigation measures other than installation of traffic signals have been recommended for Lake Gregory Drive/SR-18 and Daley Canyon Road/SR-18. These alternative mitigation measures include:

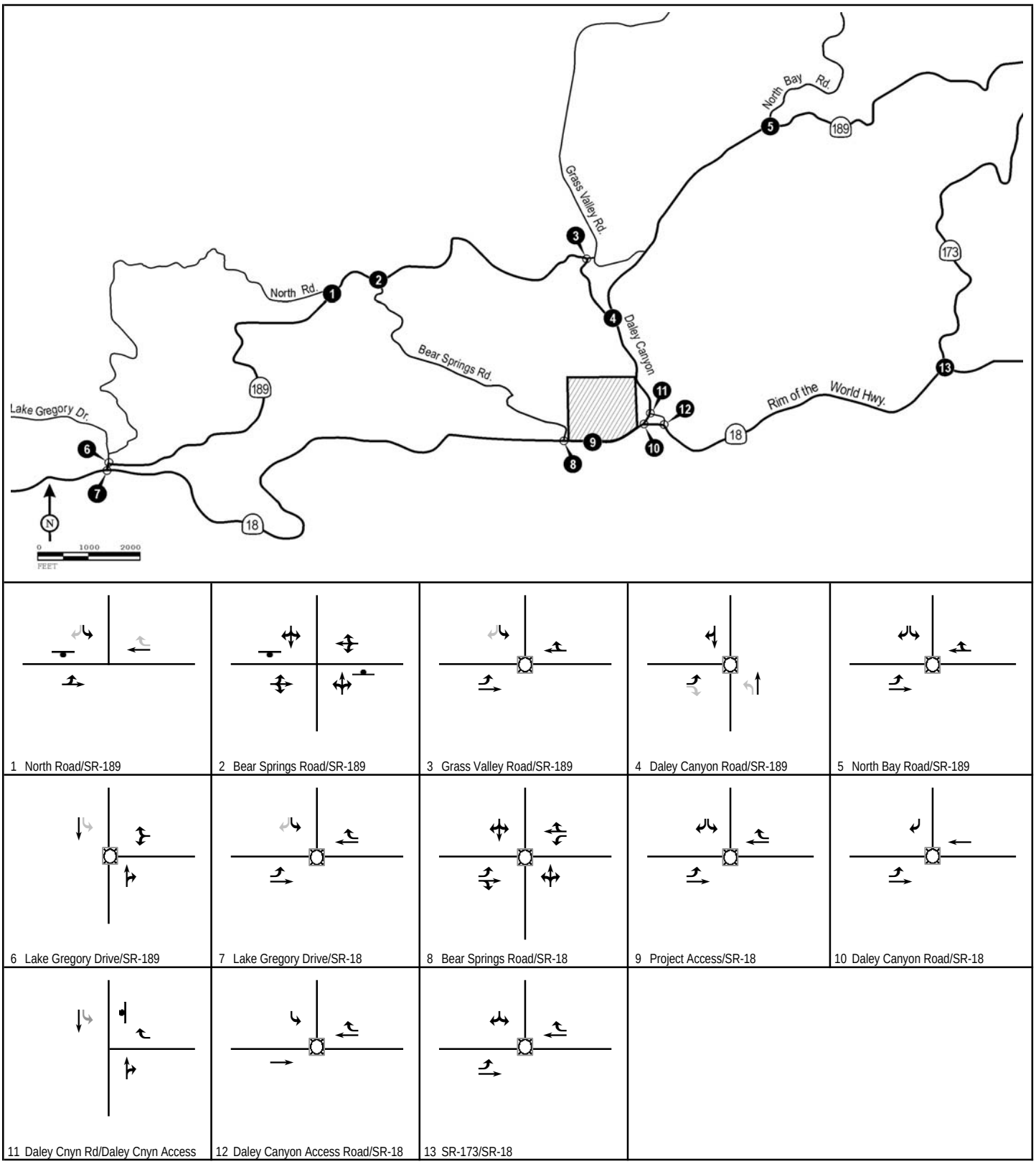

LSA

FIGURE 17

Legend

Signal

Stop Sign

Existing Turn Lane

Added Turn Lane

Church of the Woods

Intersection Geometrics and Stop Control
With Year 2030 Mitigations

R:\CTW430\July 2008\g-30_17_geometrics wp 2030 improve (7/8/2008)

Table M - Year 2009 With Project with Mitigation Intersection Levels of Service

	Saturday Peak Hour								
	Year 2009 With Project					Year 2009 With Project with Mitigations			
Intersection	Control	V/C	Delay (sec.)	LOS		New Control	V/C	Delay (sec.)	LOS
1 . North Road/SR-189	TWSC	-	21.2	C		TWSC	-	21.2	C
2 . Bear Springs Road/SR-189	TWSC	-	18.2	C		TWSC	-	18.2	C
3 . Grass Valley Road/SR-189	TWSC	-	>100	F	*	Signal	0.75	21.8	C
4 . Daley Canyon Road/SR-189	AWSC	1.17	86.1	F	*	AWSC	0.75	23.0	C
5 . North Bay Road/SR-189	AWSC	0.68	19.4	C		AWSC	0.68	19.4	C
6 . Lake Gregory Drive/SR-189	TWSC	-	20.0	C		Signal	0.31	7.6	A
7 . Lake Gregory Drive/SR-18	TWSC	-	41.6	E	*	Signal	0.68	16.3	B
8 . Bear Springs Road/SR-18	TWSC	-	31.3	D		TWSC	-	31.3	D
9 . Project Access/SR-18	TWSC	-	16.9	C		TWSC	-	16.9	C
10 . Daley Canyon Road/SR-18	TWSC	-	18.9	C		Signal	0.52	8.0	A
11 . Daley Cnyn Rd/Daley Cnyn Access	TWSC	-	12.4	B		TWSC	0.00	12.4	B
12 . Daley Canyon Access Road/SR-18	TWSC	-	41.4	E	*	Signal	0.50	8.2	A
13 . SR-173/SR-18	TWSC	-	>100	F	*	Signal	0.63	15.6	B

	Sunday Peak Hour								
	Year 2009 With Project					Year 2009 With Project with Mitigations			
Intersection	Control	V/C	Delay (sec.)	LOS		New Control	V/C	Delay (sec.)	LOS
1 . North Road/SR-189	TWSC	-	13.0	B		TWSC	-	13.0	B
2 . Bear Springs Road/SR-189	TWSC	-	14.0	B		TWSC	-	14.0	B
3 . Grass Valley Road/SR-189	TWSC	-	36.4	E	*	Signal	0.56	15.2	B
4 . Daley Canyon Road/SR-189	AWSC	0.83	24.9	C		AWSC	0.72	16.8	C
5 . North Bay Road/SR-189	AWSC	0.57	15.0	B		AWSC	0.57	15.0	B
6 . Lake Gregory Drive/SR-189	TWSC	-	25.0	C		Signal	0.36	12.7	B
7 . Lake Gregory Drive/SR-18	TWSC	-	17.6	C		Signal	0.62	19.1	B
8 . Bear Springs Road/SR-18	TWSC	-	30.3	D		TWSC	-	30.3	D
9 . Project Access/SR-18	TWSC	-	19.0	C		TWSC	-	19.0	C
10 . Daley Canyon Road/SR-18	TWSC	-	36.0	E	*	Signal	0.59	8.9	A
11 . Daley Cnyn Rd/Daley Cnyn Access	TWSC	-	13.2	B		TWSC	0.00	13.1	B
12 . Daley Canyon Access Road/SR-18	TWSC	-	44.2	E	*	Signal	0.47	9.9	A
13 . SR-173/SR-18	TWSC	-	20.6	C		Signal	0.53	18.0	C

***** Exceeds LOS standard. Intersections with a calculated V/C of greater than 1.0 are considered to be LOS F, per CMP TIA criteria.

Notes:
V/C = Volume/capacity ratio
LOS = Level of Service

Table N - Year 2013 With Project with Mitigation Intersection Levels of Service

	Saturday Peak Hour								
	Year 2013 With Project					Year 2013 With Project with Mitigations			
Intersection	Control	V/C	Delay (sec.)	LOS		New Control	V/C	Delay (sec.)	LOS
1 . North Road/SR-189	TWSC	-	26.0	D		TWSC	-	26.0	D
2 . Bear Springs Road/SR-189	TWSC	-	20.2	C		TWSC	-	20.2	C
3 . Grass Valley Road/SR-189	TWSC	-	>100	F	*	Signal	0.81	26.1	C
4 . Daley Canyon Road/SR-189	AWSC	1.24	>100	F	*	AWSC	0.84	28.0	D
5 . North Bay Road/SR-189	AWSC	0.75	22.9	C		AWSC	0.75	22.9	C
6 . Lake Gregory Drive/SR-189	TWSC	-	21.9	C		Signal	0.33	8.0	A
7 . Lake Gregory Drive/SR-18	TWSC	-	53.3	F	*	Signal	0.71	17.0	B
8 . Bear Springs Road/SR-18	TWSC	-	36.7	E	*	Signal	0.69	17.8	B
9 . Project Access/SR-18	TWSC	-	17.8	C		Signal	0.65	14.8	B
10 . Daley Canyon Road/SR-18	TWSC	-	21.8	C		Signal	0.55	8.2	A
11 . Daley Cnyn Rd/Daley Cnyn Access	TWSC	-	13.2	B		TWSC	0.00	13.2	B
12 . Daley Canyon Access Road/SR-18	TWSC	-	56.4	F	*	Signal	0.53	8.7	A
13 . SR-173/SR-18	TWSC	-	>100	F	*	Signal	0.68	17.2	B

	Sunday Peak Hour								
	Year 2013 With Project					Year 2013 With Project with Mitigations			
Intersection	Control	V/C	Delay (sec.)	LOS		New Control	V/C	Delay (sec.)	LOS
1 . North Road/SR-189	TWSC	-	14.3	B		TWSC	-	14.3	B
2 . Bear Springs Road/SR-189	TWSC	-	15.8	C		TWSC	-	15.8	C
3 . Grass Valley Road/SR-189	TWSC	-	75.8	F	*	Signal	0.63	16.8	B
4 . Daley Canyon Road/SR-189	AWSC	1.04	68.5	F	*	AWSC	0.94	28.8	D
5 . North Bay Road/SR-189	AWSC	0.71	20.2	C		AWSC	0.71	20.2	C
6 . Lake Gregory Drive/SR-189	TWSC	-	40.1	E	*	Signal	0.41	12.6	B
7 . Lake Gregory Drive/SR-18	TWSC	-	21.6	C		Signal	0.70	21.3	C
8 . Bear Springs Road/SR-18	TWSC	-	93.1	F	*	Signal	0.67	17.8	C
9 . Project Access/SR-18	TWSC	-	85.5	F	*	Signal	0.84	22.0	C
10 . Daley Canyon Road/SR-18	TWSC	-	>100	F	*	Signal	0.81	13.4	B
11 . Daley Cnyn Rd/Daley Cnyn Access	TWSC	-	16.8	C		TWSC	0.00	16.7	C
12 . Daley Canyon Access Road/SR-18	TWSC	-	>100	F	*	Signal	0.54	10.6	B
13 . SR-173/SR-18	TWSC	-	37.3	E	*	Signal	0.60	16.9	C

***** Exceeds LOS standard. Intersections with a calculated V/C of greater than 1.0 are considered to be LOS F, per CMP TIA criteria.

Notes:
V/C = Volume/capacity ratio
LOS = Level of Service

Table O - Year 2030 With Project with Mitigation Intersection Levels of Service

	Saturday Peak Hour								
	Year 2030 With Project					Year 2030 With Project with Mitigations			
Intersection	Control	V/C	Delay (sec.)	LOS		New Control	V/C	Delay (sec.)	LOS
1 . North Road/SR-189	TWSC	-	54.5	F	*	TWSC	-	22.8	C
2 . Bear Springs Road/SR-189	TWSC	-	30.8	D		TWSC	-	30.8	D
3 . Grass Valley Road/SR-189	TWSC	-	>100	F	*	Signal	0.67	19.3	B
4 . Daley Canyon Road/SR-189	AWSC	1.79	>100	F	*	Signal	0.78	20.6	C
5 . North Bay Road/SR-189	AWSC	1.16	63.4	F	*	Signal	0.76	18.2	B
6 . Lake Gregory Drive/SR-189	TWSC	-	24.4	C		Signal	0.29	6.3	A
7 . Lake Gregory Drive/SR-18	TWSC	-	>100	F	*	Signal	0.66	15.3	B
8 . Bear Springs Road/SR-18	TWSC	-	>100	F	*	Signal	0.71	16.1	B
9 . Project Access/SR-18	TWSC	-	22.9	C		Signal	0.70	12.9	B
10 . Daley Canyon Road/SR-18	TWSC	-	70.2	F	*	Signal	0.62	10.5	B
11 . Daley Cnyn Rd/Daley Cnyn Access	TWSC	-	21.5	C		TWSC	0.00	21.5	C
12 . Daley Canyon Access Road/SR-18	TWSC	-	>100	F	*	Signal	0.53	9.4	A
13 . SR-173/SR-18	TWSC	-	>100	F	*	Signal	0.60	15.4	B

	Sunday Peak Hour								
	Year 2030 With Project					Year 2030 With Project with Mitigations			
Intersection	Control	V/C	Delay (sec.)	LOS		New Control	V/C	Delay (sec.)	LOS
1 . North Road/SR-189	TWSC	-	17.6	C		TWSC	-	13.1	B
2 . Bear Springs Road/SR-189	TWSC	-	20.2	C		TWSC	-	20.2	C
3 . Grass Valley Road/SR-189	TWSC	-	>100	F	*	Signal	0.52	16.3	B
4 . Daley Canyon Road/SR-189	AWSC	1.34	>100	F	*	Signal	0.70	15.2	B
5 . North Bay Road/SR-189	AWSC	0.88	32.0	D		Signal	0.58	12.7	B
6 . Lake Gregory Drive/SR-189	TWSC	-	25.9	D		Signal	0.32	9.5	A
7 . Lake Gregory Drive/SR-18	TWSC	-	25.8	D		Signal	0.60	14.3	B
8 . Bear Springs Road/SR-18	TWSC	-	41.2	E	*	Signal	0.60	14.6	B
9 . Project Access/SR-18	TWSC	-	>100	F	*	Signal	0.83	20.5	C
10 . Daley Canyon Road/SR-18	TWSC	-	>100	F	*	Signal	0.71	12.7	B
11 . Daley Cnyn Rd/Daley Cnyn Access	TWSC	-	16.7	C		TWSC	0.00	16.7	C
12 . Daley Canyon Access Road/SR-18	TWSC	-	>100	F	*	Signal	0.46	10.3	B
13 . SR-173/SR-18	TWSC	-	>100	F	*	Signal	0.51	15.7	B

***** Exceeds LOS standard. Intersections with a calculated V/C of greater than 1.0 are considered to be LOS F, per CMP TIA criteria.

Notes:

V/C = Volume/capacity ratio
LOS = Level of Service

- Roundabout Concept; and
- Grade-Separated Interchange Concept.

Conceptual plans for the two alternative concepts other than the signalization concept have been provided by County staff and are provided in Appendix F. These conceptual plans are also included in the *Update to Technical Memorandum Refinement of Traffic Data and Initial Concept Plan* prepared by DKS Associates in June 2006 for the Royal Rangers Adventure Camp and Conference Center. Based on the preliminary engineering analysis done by DKS Associates in consultation with Caltrans, the grade-separated interchange concept would be economically and physically infeasible.

Under year 2009 with project conditions, with the implementation of a roundabout concept at the intersection of Lake Gregory Drive/SR-18, the projected LOS during the Saturday peak hour is B and the projected LOS during the Sunday peak hour is B. With the implementation of a roundabout concept at the intersection of Daley Canyon Road/SR-18, the projected LOS during the Saturday peak hour is B and the projected LOS during the Sunday peak hour is B. The level of service calculation sheets are contained in Appendix C.

Under year 2013 with project conditions, with the implementation of a roundabout concept at the intersection of Lake Gregory Drive/SR-18, the projected LOS during the Saturday peak hour is C and the projected LOS during the Sunday peak hour is B. With the implementation of a roundabout concept at the intersection of Daley Canyon Road/SR-18, the projected LOS during the Saturday peak hour is B and the projected LOS during the Sunday peak hour is B. The level of service calculation sheets are contained in Appendix C.

Under year 2030 with project conditions, with the implementation of a roundabout concept at the intersection of Lake Gregory Drive/SR-18, the projected LOS during the Saturday peak hour is B and the projected LOS during the Sunday peak hour is B. With the implementation of a roundabout concept at the intersection of Daley Canyon Road/SR-18, the projected LOS during the Saturday peak hour is B and the projected LOS during the Sunday peak hour is B. The level of service calculation sheets are contained in Appendix C.

The grade separation concept is not be feasible due to right-of-way constraints; physical constraints (such as the limited space available on mountain edges), the natural terrain of the study area, and the high cost of construction. Bridge structures are more prone to ice in winter, and could create unsafe driving conditions. Furthermore, bridge construction or cut and cover operations on hillside areas could potentially lead to adverse environmental impacts. A level of service analysis of the grade separation concept is not included due to the infeasibility.

Cost Estimates

Cost estimates have been developed for the intersection improvements recommended for year 2009, year 2013, and year 2030. The detailed cost estimate calculations are included in Appendix G. The year 2009, year 2013, and year 2030 improvement cost estimates are summarized in Tables P, Q, and R, respectively. The calculation of project fair-share percentages is included in Appendix G. The total year 2009 improvement cost estimate is $3,290,000 with the implementation of the signalization

Table P - Year 2009 Circulation Improvement Costs

Intersection	Total Improvement Cost
Grass Valley Road/SR-189	$500,000
Daley Canyon Road/SR-189	$145,000
* Lake Gregory Drive/SR-18	
Signalization Concept	$1,072,500
*Roundabout Concept***	$995,000
Grade Seperated Interchange Concept	$15,000,000
* Daley Canyon Road/SR-18	
Signalization Concept	$1,072,500
*Roundabout Concept***	$995,000
Grade Seperated Interchange Concept	$15,000,000
SR-173/SR-18	$500,000
Total Intersection Improvements	
Signalization Concept	**$3,290,000**
*Roundabout Concept***	**$3,135,000**
Grade Seperated Interchange Concept	**$31,145,000**

Note: In addition, the project is responsible for installation of a traffic signal at the project access on State Route 18.

* Two additional alternative concepts have been proposed other than signalization. The proposed improvement for Lake Gregory Drive/SR-18 will be determined by Caltrans.
** Cost of roundabout concept is not included in the CMP. Costs are based on the costs reported in the Technical Memorandum for the Royal Rangers Adventure Camp and Conference Center, prepared by DKS Associates in June 2006

Table Q - Year 2013 Circulation Improvement Costs

Intersection	Total Improvement Cost
Grass Valley Road/SR-189	$500,000
Daley Canyon Road/SR-189	$145,000
* Lake Gregory Drive/SR-18	
Signalization Concept	$1,072,500
*Roundabout Concept***	$995,000
Grade Seperated Interchange Concept	$15,000,000
Bear Springs Road/SR-18	$500,000
Project Access/SR-18	$500,000
* Daley Canyon Road/SR-18	
Signalization Concept	$1,072,500
*Roundabout Concept***	$995,000
Grade Seperated Interchange Concept	$15,000,000
SR-173/SR-18	$500,000
Total Intersection Improvements	
Signalization Concept	**$4,290,000**
*Roundabout Concept***	**$4,135,000**
Grade Seperated Interchange Concept	**$32,145,000**

Note: In addition, the project is responsible for installation of a traffic signal at the project access on State Route 18.

* Two additional alternative concepts have been proposed other than signalization. The proposed improvement for Lake Gregory Drive/SR-18 will be determined by Caltrans.
** Cost of roundabout concept is not included in the CMP. Costs are based on the costs reported in the Technical Memorandum for the Royal Rangers Adventure Camp and Conference Center, prepared by DKS Associates in June 2006

Table R - Project Contributions to Year 2030 Circulation Improvement Costs

Intersection	Total Improvement Cost	Saturday			Sunday			Worst Case	
		Level of Service with Improvements	Project Fair Share Percent	Project Fair Share Cost	Level of Service with Improvements	Project Fair Share Percent	Project Fair Share Cost	Project Fair Share Percent	Project Fair Share Cost
North Road/SR-189	$145,000	C	0.7%	$1,085	B	13.1%	$18,954	13.1%	$18,954
Grass Valley Road/SR-189	$572,500	B	1.1%	$6,409	B	16.8%	$95,950	16.8%	$95,950
Daley Canyon Road/SR-189	$645,000	C	2.5%	$16,226	B	31.0%	$200,194	31.0%	$200,194
North Bay Road/SR-189	$500,000	B	1.9%	$9,591	B	26.9%	$134,409	26.9%	$134,409
Lake Gregory Drive/SR-18									
Signalization Concept with Lane Improvements	$1,072,500	B	2.7%	$29,197	B	31.4%	$336,735	31.4%	$336,735
*Roundabout Concept***	$995,000	B	2.7%	$27,087	B	31.4%	$312,402	31.4%	$312,402
Grade Seperated Interchange Concept	$15,000,000		2.7%	$408,348		31.4%	$4,709,576	31.4%	$4,709,576
Bear Springs Road/SR-18	$500,000	B	3.2%	$15,885	B	36.6%	$183,007	36.6%	$183,007
Daley Canyon Road/SR-18									
Signalization Concept with Lane Improvements	$1,072,500	C	4.1%	$43,971	C	42.4%	$455,133	42.4%	$455,133
*Roundabout Concept***	$995,000	B	4.1%	$40,793	B	42.4%	$422,245	42.4%	$422,245
Grade Seperated Interchange Concept	$15,000,000		4.1%	$614,973		42.4%	$6,365,503	42.4%	$6,365,503
SR-173/SR-18	$500,000	B	1.9%	$9,539	B	23.9%	$119,403	23.9%	$119,403
TWLTL on SR-189 between Grass Valley Road and Daley Canyon Road	$54,000	N/A	1.8%	$981	N/A	23.9%	$12,905	23.9%	$12,905
Total Intersection Improvements									
Signalization Concept with Lane Improvements	**$5,061,500**			**$132,884**			**$1,556,690**		**$1,556,690**
*Roundabout Concept***	**$4,906,500**			**$127,596**			**$1,499,469**		**$1,499,469**
Grade Seperated Interchange Concept	**$32,916,500**			**$1,083,037**			**$11,839,901**		**$11,839,901**

Note: In addition, the project is responsible for installation of a traffic signal at the project access on State Route 18.

* Two additional alternative concepts have been proposed other than signalization. The proposed improvement for Lake Gregory Drive/SR-18 will be determined by Caltrans.

** Cost of roundabout concept is not included in the CMP. Costs are based on the costs reported in the Technical Memorandum for the Royal Rangers Adventure Camp and Conference Center

The delay for the grade-separated interchange is the worse of the two ramp terminals.

concept, $3,135,000 with the implementation of the roundabout concept, and $31,145,000 with the implementation of the grade-separated interchange concept. The total year 2013 improvement cost estimate is $4,290,000 with the implementation of the signalization concept, $4,135,000 with the implementation of the roundabout concept, and $32,145,000 with the implementation of the grade-separated interchange concept. The total year 2030 improvement cost estimate is $5,061,500 with the implementation of the signalization concept, $4,906,500 with the implementation of the roundabout concept, and $32,916,500 with the implementation of the grade-separated interchange concept. The total fair-share costs for year 2030 are shown in Table Q.

The unit costs are based on standard preliminary construction cost estimates for CMP improvements. The cost estimates include unit costs for pavement striping and signing changes. These cost estimates do not include preliminary engineering and are intended solely for the CMP-stated purpose of discussion with the local jurisdiction and with neighboring jurisdictions. They do not imply any legal responsibility or formula for contributions to mitigation.

SUMMARY AND CONCLUSIONS

This section of the report summarizes the results and conclusions of the traffic analysis for the Church of the Woods project. The key results are summarized below.

1. The study area includes 13 intersections, including the proposed project access point. This report analyzed Saturday and Sunday peak hour traffic operations for all study area intersections.

2. The analysis examined traffic operations under the following conditions:

   - Existing (2007) conditions;
   - Year 2009 without project conditions;
   - Year 2009 with project conditions;
   - Year 2013 without project conditions;
   - Year 2013 with project conditions;
   - Year 2030 without project conditions; and
   - Year 2030 with project conditions.

3. All analysis intersections are currently operating at satisfactory levels of service, with the exception of the following:

   - Grass Valley Road/SR-189 (Saturday peak hour);
   - Daley Canyon Road/SR-189 (Saturday peak hour); and
   - SR-173/SR-18 (Saturday peak hour).

4. The proposed project is estimated to generate 58 new trips during the Saturday peak hour and 334 new trips during the Sunday peak hour in 2009. It is estimated to generate 58 new trips during the Saturday peak hour and 800 new trips during the Sunday peak hour in 2013 and 2030.

5. Under 2009 without project conditions, all study area intersections will operate at satisfactory levels of service, with the exception of the following:

   - Grass Valley Road/SR-189 (Saturday peak hour);
   - Daley Canyon Road/SR-189 (Saturday peak hour);
   - Lake Gregory Drive/SR-18 (Saturday peak hour);
   - Daley Canyon Access Road/SR-18 (Saturday peak hour); and
   - SR-173/SR-18 (Saturday peak hour).

6. Under year 2009 with project conditions, all intersections examined will operate at satisfactory levels of service, with the exception of the following:

   - Grass Valley Road/SR-189 (Saturday and Sunday peak hours);
   - Daley Canyon Road/SR-189 (Saturday peak hour);
   - Lake Gregory Drive/SR-18 (Saturday peak hour);
   - Daley Canyon Road/SR-18 (Sunday peak hour);
   - Daley Canyon Access Road/SR-18 (Saturday and Sunday peak hours); and
   - SR-173/SR-18 (Saturday peak hour).

7. Under year 2013 without project conditions, all intersections examined will operate at satisfactory levels of service, with the exception of the following:

   - Grass Valley Road/SR-189 (Saturday and Sunday peak hours);
   - Daley Canyon Road/SR-189 (Saturday peak hour);
   - Lake Gregory Drive/SR-18 (Saturday peak hour);
   - Daley Canyon Access Road/SR-18 (Saturday and Sunday peak hours); and
   - SR-173/SR-18 (Saturday peak hour).

8. Under year 2013 with project conditions, all intersections examined will operate at satisfactory levels of service, with the exception of the following:

   - Grass Valley Road/SR-189 (Saturday and Sunday peak hours);
   - Daley Canyon Road/SR-189 (Saturday and Sunday peak hours);
   - Lake Gregory Drive/SR-189 (Sunday peak hour);

- Lake Gregory Drive/SR-18 (Saturday peak hour);
- Bear Springs Road/SR-18 (Saturday and Sunday peak hours);
- Project Access/SR-18 (Sunday peak hour);
- Daley Canyon Road/SR-18 (Sunday peak hour);
- Daley Canyon Access Road/SR-18 (Saturday and Sunday peak hours); and
- SR-173/SR-18 (Saturday and Sunday peak hours).

9. Under 2030 without project conditions, all study area intersections will operate at satisfactory levels of service, with the exception of the following:

- North Road/SR-189 (Saturday peak hour);
- Grass Valley Road/SR-189 (Saturday and Sunday peak hours);
- Daley Canyon Road/SR-189 (Saturday and Sunday peak hours);
- North Bay Road/SR-189 (Saturday peak hour);
- Lake Gregory Drive/SR-18 (Saturday peak hour);
- Bear Springs Road/SR-18 (Saturday peak hour);
- Daley Canyon Road/SR-18 (Saturday and Sunday peak hours);
- Daley Canyon Access Road/SR-18 (Saturday and Sunday peak hours); and
- SR-173/SR-18 (Saturday and Sunday peak hours).

10. Under year 2030 with project conditions, all intersections examined will operate at satisfactory levels of service, with the exception of the following:

- North Road/SR-189 (Saturday peak hour);
- Grass Valley Road/SR-189 (Saturday and Sunday peak hours);
- Daley Canyon Road/SR-189 (Saturday and Sunday peak hours);
- North Bay Road/SR-189 (Saturday peak hour);
- Lake Gregory Drive/SR-18 (Saturday peak hour);
- Bear Springs Road/SR-18 (Saturday peak hour);
- Project Access/SR-18 (Sunday peak hour);
- Daley Canyon Road/SR-18 (Saturday and Sunday peak hours);
- Daley Canyon Access Road/SR-18 Saturday and Sunday peak hours); and
- SR-173/SR-18 (Saturday and Sunday peak hours).

11. Mitigation measures have been recommended for the significantly impacted intersections under year 2009 with project conditions. These improvements are as follows:

    - Grass Valley Road/SR-189: Install a traffic signal.
    - Daley Canyon Road/SR-189: Add an eastbound right-turn lane. Convert the existing shared eastbound left/right-turn lane to a dedicated left-turn lane. Add a northbound left-turn lane. Convert the existing shared northbound through/left-turn lane to a dedicated through lane. These improvements may require additional right-of-way.
    - Lake Gregory Drive/SR-18: Install traffic signals on Lake Gregory Drive at SR-18 and SR-189 and coordinate the signals. Add a southbound left-turn lane at SR-189/Lake Gregory Drive.
    - Daley Canyon Road/SR-18: Install a traffic signal. The signal should be interconnected with the signal at Daley Canyon Access Road/SR-18. The signal should provide an overlap phase for southbound right-turn movements so that they can move concurrently with eastbound left turns. This improvement is required to mitigate the intersection of Daley Canyon Access Road/SR-18.
    - Daley Canyon Road/Daley Canyon Access Road: Add a southbound left-turn lane. This improvement is required to allow left-turning vehicles to stack without blocking through movements. This improvement is required to mitigate the intersection of Daley Canyon Access Road/SR-18. This improvement may require additional right-of-way.
    - Daley Canyon Access Road/SR-18: Install a traffic signal. Traffic signal should be interconnected with the signal at Daley Canyon Road/SR-18.
    - SR-173/SR-18: Install a traffic signal.

12. Mitigation measures have been recommended for the significantly impacted intersections under year 2013 with project conditions. These improvements are as follows:

    - Grass Valley Road/SR-189: Install a traffic signal.
    - Daley Canyon Road/SR-189: Add an eastbound right-turn lane and a northbound left-turn lane. These improvements may require additional right-of-way.
    - Lake Gregory Drive/SR-18: Install traffic signals on Lake Gregory Drive at SR-18 and SR-189 and coordinate the signals. Add a southbound left-turn lane at SR-189/Lake Gregory Drive.
    - Bear Springs Road/SR-18: Install a traffic signal.
    - Project Access/SR-18: Install a traffic signal. The project is responsible for installing the traffic signal.
    - Daley Canyon Road/SR-18: Install a traffic signal. The signal should be interconnected with the signal at Daley Canyon Access Road/SR-18. The signal should provide an overlap phase for southbound right-turn movements so that they can move concurrently with eastbound left turns. This improvement is required to mitigate the intersection of Daley Canyon Access Road/SR-18.

- Daley Canyon Road/Daley Canyon Access Road: Add a southbound left-turn lane. This improvement is required to allow left-turning vehicles to stack without blocking through movements. This improvement is required to mitigate the intersection of Daley Canyon Access Road/SR-18. This improvement may require additional right-of-way.
- Daley Canyon Access Road/SR-18: Install a traffic signal. Traffic signal should be interconnected with the signal at Daley Canyon Road/SR-18.
- SR-173/SR-18: Install a traffic signal.

13. Mitigation measures have been recommended for significantly impacted intersections under year 2030 with project conditions. These improvements are as follows:

    - North Road/SR-189: Add a dedicated southbound right-turn lane and a dedicated westbound right-turn lane. Convert the existing shared southbound left/right-turn lane to a dedicated left-turn lane. If an additional lane is not feasible, converting the two-way stop control to all-way stop control would result in a satisfactory level of service without additional lanes.
    - Grass Valley Road/SR-189: Install a traffic signal. Add a dedicated southbound right-turn lane. Convert the existing shared southbound left/right-turn lane to a dedicated left-turn lane.
    - Daley Canyon Road/SR-189: Install a traffic signal. Add an eastbound right-turn lane. Add a northbound left-turn lane. Convert the existing shared eastbound left/right-turn lane to a dedicated left-turn lane.
    - North Bay Road/SR-189: Install a traffic signal.
    - Lake Gregory Drive/SR-18: Install traffic signals on Lake Gregory Drive at SR-18 and SR-189 and coordinate the signals. Add a southbound left-turn lane at SR-189/Lake Gregory Drive.
    - Bear Springs Road/SR-18: Install a traffic signal.
    - Project Access/SR-18: Install a traffic signal. The project is responsible for installing the traffic signal.
    - Daley Canyon Road/SR-18: Install a traffic signal. The signal should be interconnected with the signal at Daley Canyon Access Road/SR-18. The signal should provide an overlap phase for southbound right-turn movements so that they can move concurrently with eastbound left turns.
    - Daley Canyon Road/Daley Canyon Access Road: Add a southbound left-turn lane. This improvement is required to allow left-turning vehicles to stack without blocking through movements.
    - Daley Canyon Access Road/SR-18: Install a traffic signal. Traffic signal should be interconnected with the signal at Daley Canyon Road/SR-18.
    - SR-173/SR-18: Install a traffic signal.

14. The total cost of year 2009 improvements is $3,290,000 and the total cost of year 2013 improvements is $4,290,000. The total cost of year 2030 improvements is $5,061,500, of which

the project's total fair-share contribution is $1,556,690, based on the worst-case impact at each location.

15. The Roundabout Concept and Grade-Separated Interchange Concept have been analyzed for Lake Gregory Drive/SR-18 and Daley Canyon Road/SR-18 as alternative mitigation measures to the installation of traffic signals.

APPENDIX A

TRAFFIC COUNT SHEETS

Counts Unlimited, Inc.
25424 Jaclyn Avenue
Moreno Valley, CA 92557
(951) 247-6716

County of San Bernardino
N/S: North Road
E/W: State Route 189
Weather: Sunny

File Name : CSBNO189SAT
Site Code : 00313161
Start Date : 3/24/2007
Page No : 1

Groups Printed- Total Volume

	North Road Southbound			State Route 189 Westbound			State Route 189 Eastbound			
Start Time	Left	Right	App. Total	Thru	Right	App. Total	Left	Thru	App. Total	Int. Total
10:30 AM	13	8	21	27	12	39	5	17	22	82
10:45 AM	15	6	21	10	10	20	4	21	25	66
Total	28	14	42	37	22	59	9	38	47	148
11:00 AM	17	6	23	25	11	36	3	23	26	85
11:15 AM	22	12	34	21	17	38	4	23	27	99
11:30 AM	17	14	31	29	24	53	10	34	44	128
11:45 AM	45	13	58	30	32	62	8	25	33	153
Total	101	45	146	105	84	189	25	105	130	465
12:00 PM	33	5	38	22	26	48	7	40	47	133
12:15 PM	32	6	38	38	23	61	3	28	31	130
Grand Total	194	70	264	202	155	357	44	211	255	876
Apprch %	73.5	26.5		56.6	43.4		17.3	82.7		
Total %	22.1	8	30.1	23.1	17.7	40.8	5	24.1	29.1	

	North Road Southbound			State Route 189 Westbound			State Route 189 Eastbound			
Start Time	Left	Right	App. Total	Thru	Right	App. Total	Left	Thru	App. Total	Int. Total
Peak Hour Analysis From 10:30 AM to 12:15 PM - Peak 1 of 1										
Peak Hour for Entire Intersection Begins at 11:30 AM										
11:30 AM	17	**14**	31	29	24	53	**10**	34	44	128
11:45 AM	**45**	13	**58**	30	**32**	**62**	8	25	33	**153**
12:00 PM	33	5	38	22	26	48	7	**40**	**47**	133
12:15 PM	32	6	38	**38**	23	61	3	28	31	130
Total Volume	127	38	165	119	105	224	28	127	155	544
% App. Total	77	23		53.1	46.9		18.1	81.9		
PHF	.706	.679	.711	.783	.820	.903	.700	.794	.824	.889

Counts Unlimited, Inc.
25424 Jaclyn Avenue
Moreno Valley, CA 92557
(951) 247-6716

County of San Bernardino
N/S: North Road
E/W: State Route 189
Weather: Sunny

File Name : CSBNO189SAT
Site Code : 00313161
Start Date : 3/24/2007
Page No : 2

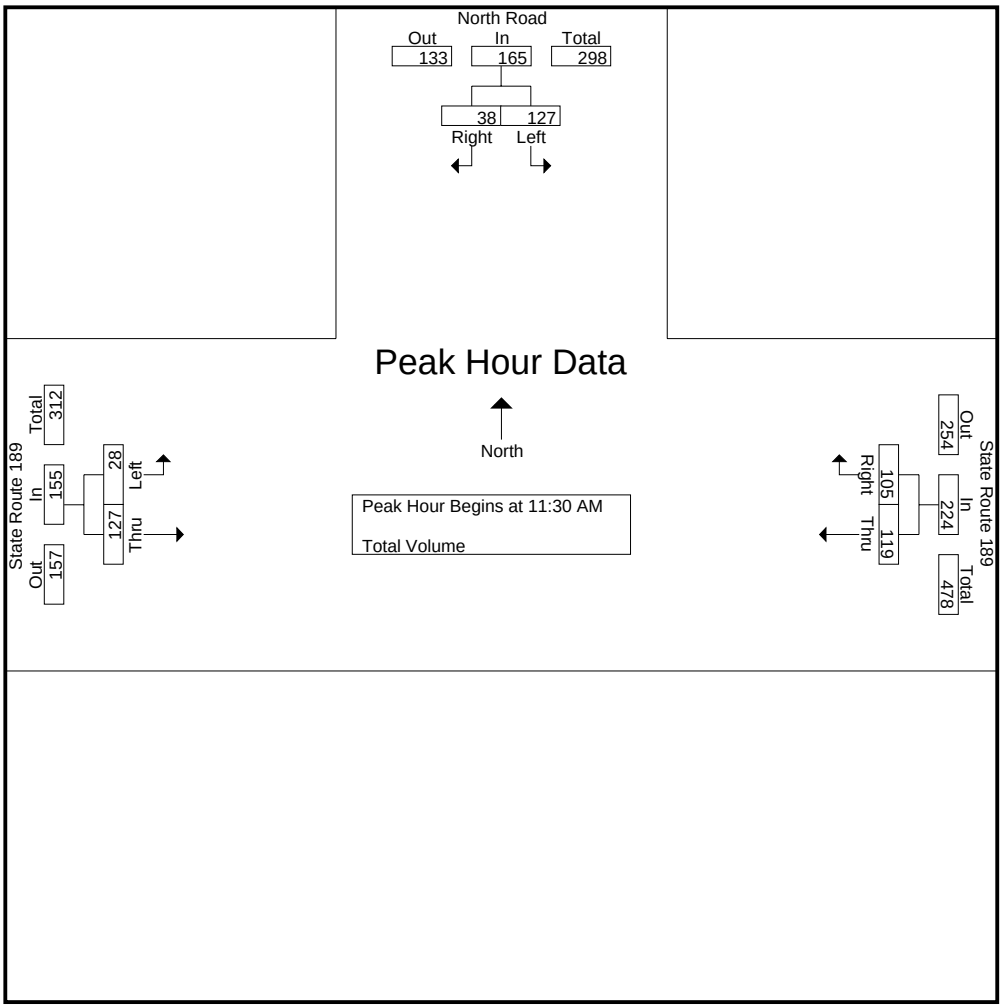

Peak Hour Analysis From 10:30 AM to 12:15 PM - Peak 1 of 1
Peak Hour for Each Approach Begins at:

	11:30 AM			11:30 AM			11:30 AM		
+0 mins.	17	**14**	31	29	24	53	**10**	34	44
+15 mins.	**45**	13	**58**	30	**32**	**62**	8	25	33
+30 mins.	33	5	38	22	26	48	7	**40**	**47**
+45 mins.	32	6	38	**38**	23	61	3	28	31
Total Volume	127	38	165	119	105	224	28	127	155
% App. Total	77	23		53.1	46.9		18.1	81.9	
PHF	.706	.679	.711	.783	.820	.903	.700	.794	.824

Counts Unlimited, Inc.
25424 Jaclyn Avenue
Moreno Valley, CA 92557
(951) 247-6716

County of San Bernardino
N/S: North Road
E/W: State Route 189
Weather: Sunny

File Name : CSBNO189SUN
Site Code : 00313191
Start Date : 3/25/2007
Page No : 1

Groups Printed- Total Volume

	North Road Southbound			State Route 189 Westbound			State Route 189 Eastbound			
Start Time	Left	Right	App. Total	Thru	Right	App. Total	Left	Thru	App. Total	Int. Total
09:30 AM	2	2	4	1	1	2	1	1	2	8
09:45 AM	13	8	21	19	24	43	12	11	23	87
Total	15	10	25	20	25	45	13	12	25	95
10:00 AM	12	7	19	23	12	35	2	16	18	72
10:15 AM	19	15	34	28	9	37	2	17	19	90
10:30 AM	12	8	20	22	18	40	2	18	20	80
10:45 AM	24	11	35	24	22	46	11	16	27	108
Total	67	41	108	97	61	158	17	67	84	350
11:00 AM	19	8	27	25	12	37	9	16	25	89
11:15 AM	13	13	26	44	7	51	6	12	18	95
Grand Total	114	72	186	186	105	291	45	107	152	629
Apprch %	61.3	38.7		63.9	36.1		29.6	70.4		
Total %	18.1	11.4	29.6	29.6	16.7	46.3	7.2	17	24.2	

	North Road Southbound			State Route 189 Westbound			State Route 189 Eastbound			
Start Time	Left	Right	App. Total	Thru	Right	App. Total	Left	Thru	App. Total	Int. Total
Peak Hour Analysis From 09:30 AM to 11:15 AM - Peak 1 of 1										
Peak Hour for Entire Intersection Begins at 10:30 AM										
10:30 AM	12	8	20	22	18	40	2	**18**	20	80
10:45 AM	**24**	11	**35**	24	**22**	46	**11**	16	**27**	**108**
11:00 AM	19	8	27	25	12	37	9	16	25	89
11:15 AM	13	**13**	26	**44**	7	**51**	6	12	18	95
Total Volume	68	40	108	115	59	174	28	62	90	372
% App. Total	63	37		66.1	33.9		31.1	68.9		
PHF	.708	.769	.771	.653	.670	.853	.636	.861	.833	.861

Counts Unlimited, Inc.
25424 Jaclyn Avenue
Moreno Valley, CA 92557
(951) 247-6716

County of San Bernardino
N/S: North Road
E/W: State Route 189
Weather: Sunny

File Name : CSBNO189SUN
Site Code : 00313191
Start Date : 3/25/2007
Page No : 2

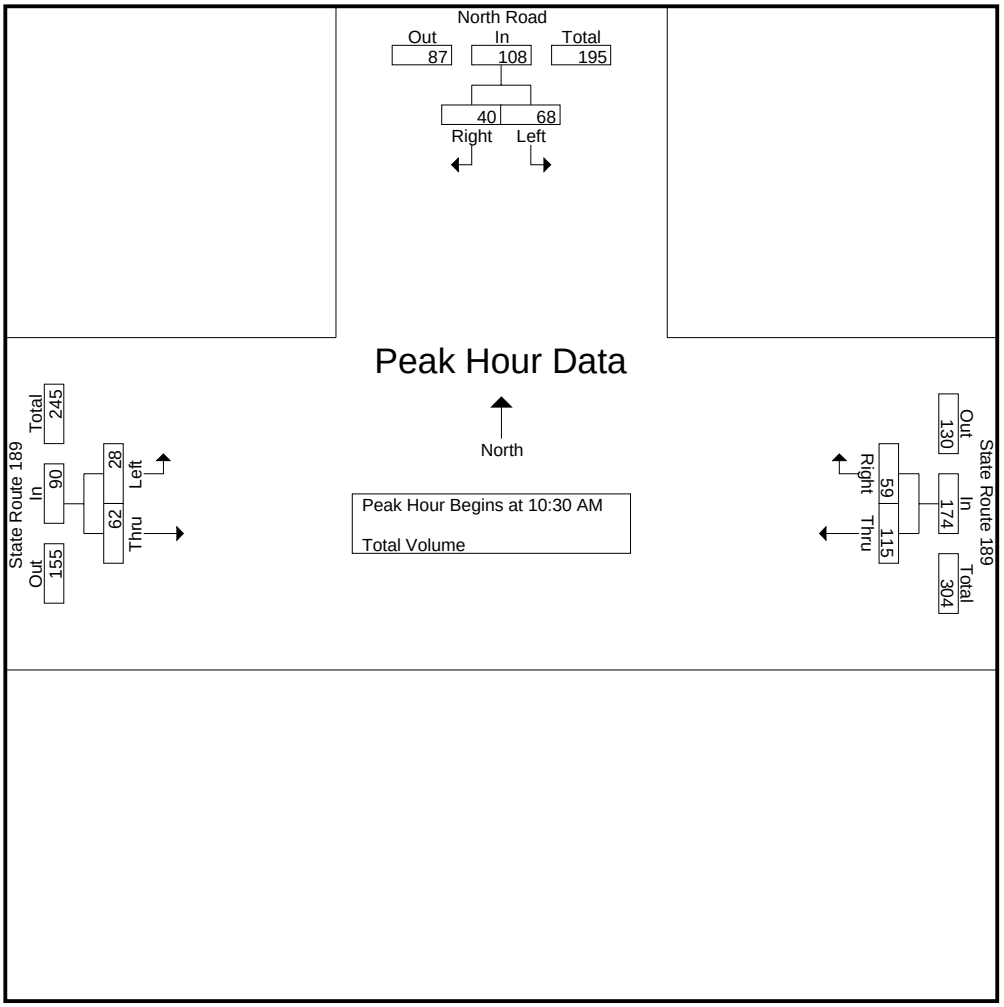

Peak Hour Analysis From 09:30 AM to 11:15 AM - Peak 1 of 1

Peak Hour for Each Approach Begins at:

	10:15 AM			10:30 AM			10:15 AM		
+0 mins.	19	**15**	34	22	18	40	2	17	19
+15 mins.	12	8	20	24	**22**	46	2	**18**	20
+30 mins.	**24**	11	**35**	25	12	37	**11**	16	**27**
+45 mins.	19	8	27	**44**	7	**51**	9	16	25
Total Volume	74	42	116	115	59	174	24	67	91
% App. Total	63.8	36.2		66.1	33.9		26.4	73.6	
PHF	.771	.700	.829	.653	.670	.853	.545	.931	.843

Counts Unlimited, Inc.
25424 Jaclyn Avenue
Moreno Valley, CA 92557
(951) 247-6716

County of San Bernardino
N/S: Bear Springs Road / Rose Lane
E/W: State Route 189
Weather: Sunny

File Name : CSBBS189SAT
Site Code : 00313160
Start Date : 3/24/2007
Page No : 1

Groups Printed- Total Volume

	Rose Lane Southbound				State Route 189 Westbound				Bear Springs Road Northbound				State Route 189 Eastbound				
Start Time	Left	Thru	Right	App. Total	Left	Thru	Right	App. Total	Left	Thru	Right	App. Total	Left	Thru	Right	App. Total	Int. Total
10:30 AM	2	1	7	10	3	28	6	37	1	0	1	2	3	17	3	23	72
10:45 AM	8	3	7	18	1	15	5	21	5	2	1	8	4	33	2	39	86
Total	10	4	14	28	4	43	11	58	6	2	2	10	7	50	5	62	158
11:00 AM	11	1	11	23	1	29	7	37	1	3	2	6	8	38	2	48	114
11:15 AM	6	1	14	21	2	31	8	41	4	0	1	5	19	30	5	54	121
11:30 AM	8	4	13	25	2	46	3	51	5	1	2	8	7	43	2	52	136
11:45 AM	4	1	10	15	2	42	6	50	3	4	3	10	8	54	8	70	145
Total	29	7	48	84	7	148	24	179	13	8	8	29	42	165	17	224	516
12:00 PM	8	2	9	19	2	44	8	54	4	5	5	14	15	41	10	66	153
12:15 PM	4	0	11	15	0	31	4	35	5	1	0	6	4	43	5	52	108
Grand Total	51	13	82	146	13	266	47	326	28	16	15	59	68	299	37	404	935
Apprch %	34.9	8.9	56.2		4	81.6	14.4		47.5	27.1	25.4		16.8	74	9.2		
Total %	5.5	1.4	8.8	15.6	1.4	28.4	5	34.9	3	1.7	1.6	6.3	7.3	32	4	43.2	

	Rose Lane Southbound				State Route 189 Westbound				Bear Springs Road Northbound				State Route 189 Eastbound				
Start Time	Left	Thru	Right	App. Total	Left	Thru	Right	App. Total	Left	Thru	Right	App. Total	Left	Thru	Right	App. Total	Int. Total
Peak Hour Analysis From 10:30 AM to 12:15 PM - Peak 1 of 1																	
Peak Hour for Entire Intersection Begins at 11:15 AM																	
11:15 AM	6	1	**14**	21	**2**	31	**8**	41	4	0	1	5	**19**	30	5	54	121
11:30 AM	**8**	**4**	13	**25**	2	**46**	3	51	**5**	1	2	8	7	43	2	52	136
11:45 AM	4	1	10	15	2	42	6	50	3	4	3	10	8	**54**	8	**70**	145
12:00 PM	8	2	9	19	2	44	8	**54**	4	**5**	**5**	**14**	15	41	**10**	66	**153**
Total Volume	26	8	46	80	8	163	25	196	16	10	11	37	49	168	25	242	555
% App. Total	32.5	10	57.5		4.1	83.2	12.8		43.2	27	29.7		20.2	69.4	10.3		
PHF	.813	.500	.821	.800	1.000	.886	.781	.907	.800	.500	.550	.661	.645	.778	.625	.864	.907

Counts Unlimited, Inc.
25424 Jaclyn Avenue
Moreno Valley, CA 92557
(951) 247-6716

County of San Bernardino
N/S: Bear Springs Road / Rose Lane
E/W: State Route 189
Weather: Sunny

File Name : CSBBS189SAT
Site Code : 00313160
Start Date : 3/24/2007
Page No : 2

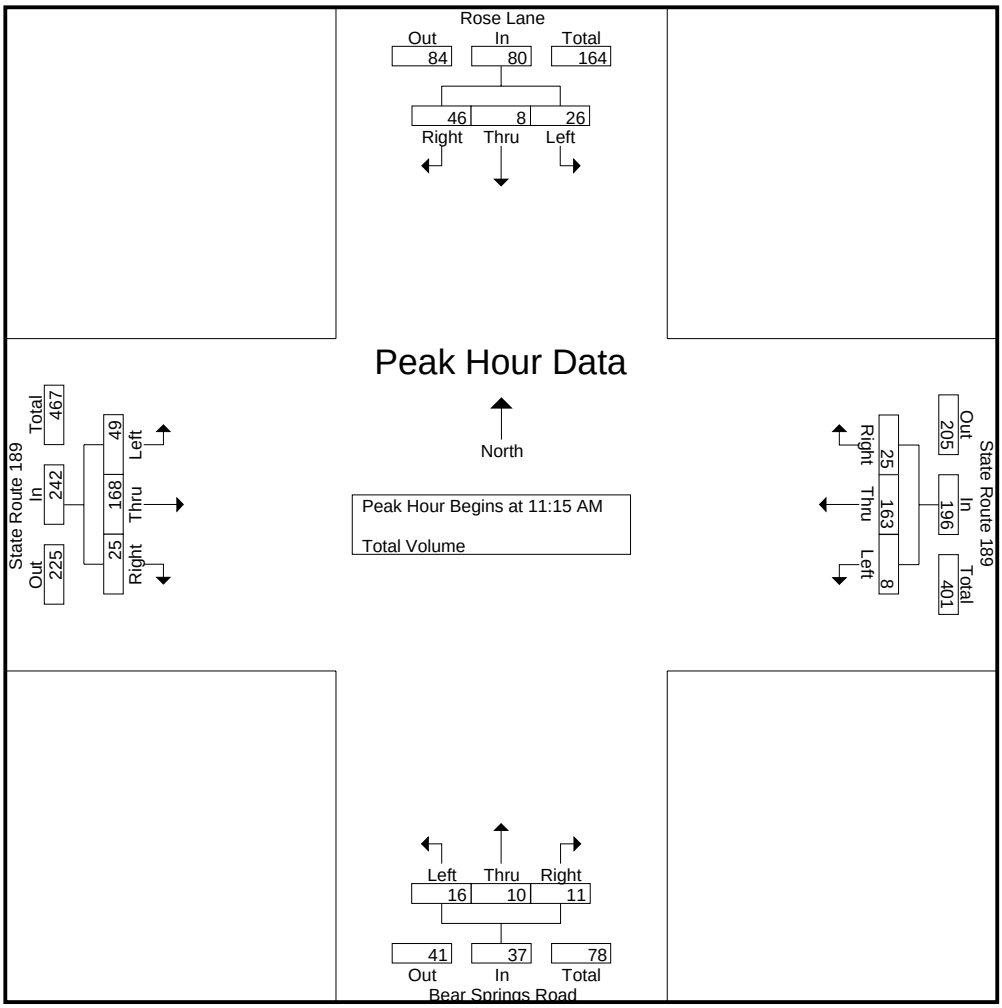

Peak Hour Analysis From 10:30 AM to 12:15 PM - Peak 1 of 1
Peak Hour for Each Approach Begins at:

	10:45 AM				11:15 AM				11:30 AM				11:15 AM			
+0 mins.	8	3	7	18	**2**	31	**8**	41	**5**	1	2	8	**19**	30	5	54
+15 mins.	**11**	1	11	23	2	**46**	3	51	3	4	3	10	7	43	2	52
+30 mins.	6	1	**14**	21	2	42	6	50	4	**5**	**5**	**14**	8	**54**	8	**70**
+45 mins.	8	**4**	13	**25**	2	44	8	**54**	5	1	0	6	15	41	**10**	66
Total Volume	33	9	45	87	8	163	25	196	17	11	10	38	49	168	25	242
% App. Total	37.9	10.3	51.7		4.1	83.2	12.8		44.7	28.9	26.3		20.2	69.4	10.3	
PHF	.750	.563	.804	.870	1.000	.886	.781	.907	.850	.550	.500	.679	.645	.778	.625	.864

Counts Unlimited, Inc.
25424 Jaclyn Avenue
Moreno Valley, CA 92557
(951) 247-6716

County of San Bernardino
N/S: Bear Springs Road / Rose Lane
E/W: State Route 189
Weather: Sunny

File Name : CSBBS189SUN
Site Code : 00313161
Start Date : 3/25/2007
Page No : 1

Groups Printed- Total Volume

	Rose Lane Southbound				State Route 189 Westbound				Bear Springs Road Northbound				State Route 189 Eastbound				
Start Time	Left	Thru	Right	App. Total	Left	Thru	Right	App. Total	Left	Thru	Right	App. Total	Left	Thru	Right	App. Total	Int. Total
09:30 AM	0	0	0	0	0	2	0	2	0	0	0	0	0	1	0	1	3
09:45 AM	6	0	10	16	1	29	4	34	7	1	1	9	8	22	4	34	93
Total	6	0	10	16	1	31	4	36	7	1	1	9	8	23	4	35	96
10:00 AM	3	3	10	16	2	23	5	30	3	0	1	4	7	18	3	28	78
10:15 AM	7	5	13	25	1	37	2	40	4	1	3	8	9	27	3	39	112
10:30 AM	8	1	8	17	2	36	3	41	1	1	0	2	4	20	2	26	86
10:45 AM	2	2	13	17	2	32	5	39	4	2	2	8	13	30	4	47	111
Total	20	11	44	75	7	128	15	150	12	4	6	22	33	95	12	140	387
11:00 AM	9	0	11	20	4	34	4	42	0	6	2	8	6	35	7	48	118
11:15 AM	3	2	8	13	1	35	7	43	2	1	0	3	3	26	1	30	89
11:30 AM	2	1	6	9	1	45	6	52	1	1	1	3	5	20	4	29	93
Grand Total	40	14	79	133	14	273	36	323	22	13	10	45	55	199	28	282	783
Apprch %	30.1	10.5	59.4		4.3	84.5	11.1		48.9	28.9	22.2		19.5	70.6	9.9		
Total %	5.1	1.8	10.1	17	1.8	34.9	4.6	41.3	2.8	1.7	1.3	5.7	7	25.4	3.6	36	

	Rose Lane Southbound				State Route 189 Westbound				Bear Springs Road Northbound				State Route 189 Eastbound				
Start Time	Left	Thru	Right	App. Total	Left	Thru	Right	App. Total	Left	Thru	Right	App. Total	Left	Thru	Right	App. Total	Int. Total
Peak Hour Analysis From 09:30 AM to 11:30 AM - Peak 1 of 1																	
Peak Hour for Entire Intersection Begins at 10:15 AM																	
10:15 AM	7	**5**	**13**	**25**	1	**37**	2	40	**4**	1	**3**	**8**	9	27	3	39	112
10:30 AM	8	1	8	17	2	36	3	41	1	1	0	2	4	20	2	26	86
10:45 AM	2	2	13	17	2	32	**5**	39	4	2	2	8	**13**	30	4	47	111
11:00 AM	**9**	0	11	20	**4**	34	4	**42**	0	**6**	2	8	6	**35**	**7**	**48**	**118**
Total Volume	26	8	45	79	9	139	14	162	9	10	7	26	32	112	16	160	427
% App. Total	32.9	10.1	57		5.6	85.8	8.6		34.6	38.5	26.9		20	70	10		
PHF	.722	.400	.865	.790	.563	.939	.700	.964	.563	.417	.583	.813	.615	.800	.571	.833	.905

Counts Unlimited, Inc.
25424 Jaclyn Avenue
Moreno Valley, CA 92557
(951) 247-6716

County of San Bernardino
N/S: Bear Springs Road / Rose Lane
E/W: State Route 189
Weather: Sunny

File Name : CSBBS189SUN
Site Code : 00313161
Start Date : 3/25/2007
Page No : 2

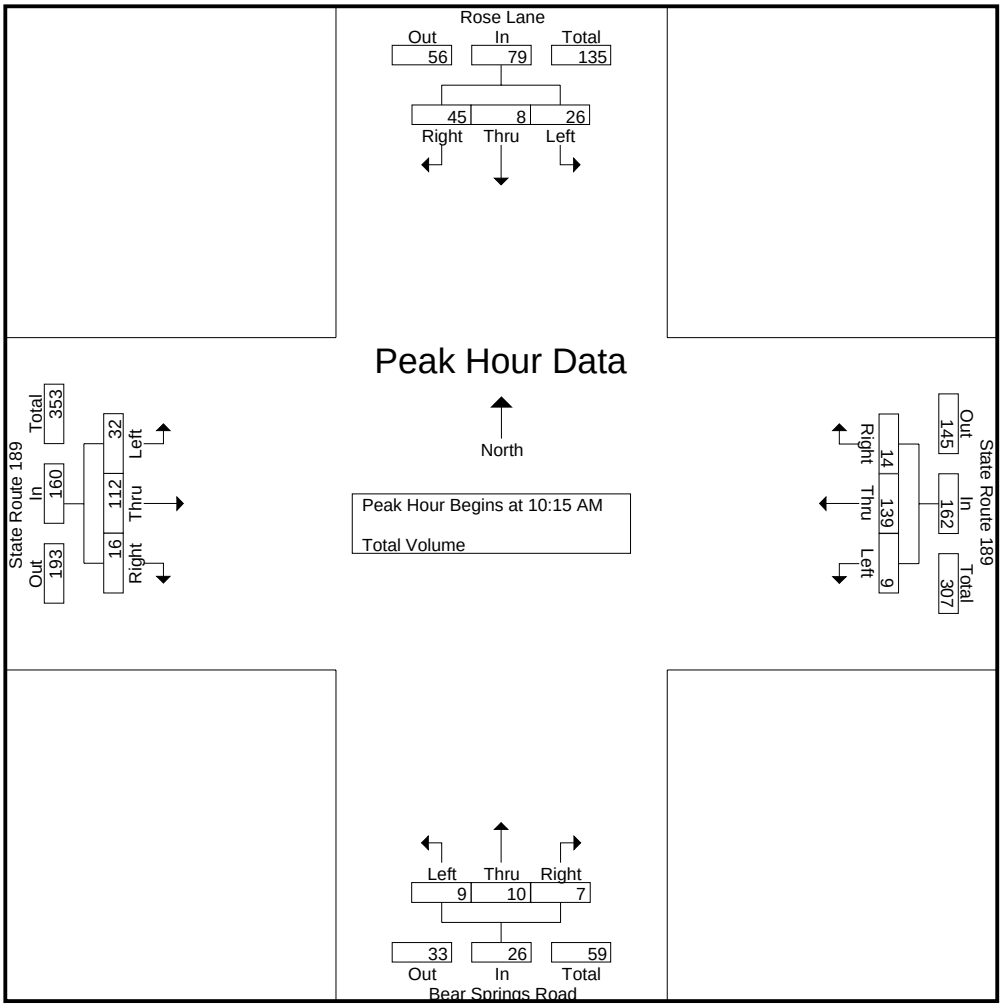

Peak Hour Analysis From 09:30 AM to 11:30 AM - Peak 1 of 1

Peak Hour for Each Approach Begins at:

	10:15 AM				10:45 AM				10:15 AM				10:15 AM			
+0 mins.	7	**5**	**13**	**25**	2	32	5	39	**4**	1	**3**	**8**	9	27	3	39
+15 mins.	8	1	8	17	**4**	34	4	42	1	1	0	2	4	20	2	26
+30 mins.	2	2	13	17	1	35	**7**	43	4	2	2	8	**13**	30	4	47
+45 mins.	**9**	0	11	20	1	**45**	6	**52**	0	**6**	2	8	6	**35**	**7**	**48**
Total Volume	26	8	45	79	8	146	22	176	9	10	7	26	32	112	16	160
% App. Total	32.9	10.1	57		4.5	83	12.5		34.6	38.5	26.9		20	70	10	
PHF	.722	.400	.865	.790	.500	.811	.786	.846	.563	.417	.583	.813	.615	.800	.571	.833

Counts Unlimited, Inc.
25424 Jaclyn Avenue
Moreno Valley, CA 92557
(951) 247-6716

County of San Bernardino
N/S: Grass Valley Road
E/W: State Route 189
Weather: Sunny

File Name : CSBGV189SAT
Site Code : 00313156
Start Date : 3/24/2007
Page No : 1

Groups Printed- Total Volume

	Grass Valley Road Southbound			State Route 189 Westbound			State Route 189 Eastbound			
Start Time	Left	Right	App. Total	Thru	Right	App. Total	Left	Thru	App. Total	Int. Total
10:30 AM	49	39	88	6	23	29	21	25	46	163
10:45 AM	58	25	83	8	39	47	15	34	49	179
Total	107	64	171	14	62	76	36	59	95	342
11:00 AM	49	29	78	14	26	40	19	38	57	175
11:15 AM	58	41	99	9	22	31	15	44	59	189
11:30 AM	60	47	107	20	31	51	22	32	54	212
11:45 AM	52	42	94	13	32	45	21	51	72	211
Total	219	159	378	56	111	167	77	165	242	787
12:00 PM	48	48	96	23	25	48	23	37	60	204
12:15 PM	42	46	88	10	25	35	24	43	67	190
Grand Total	416	317	733	103	223	326	160	304	464	1523
Apprch %	56.8	43.2		31.6	68.4		34.5	65.5		
Total %	27.3	20.8	48.1	6.8	14.6	21.4	10.5	20	30.5	

	Grass Valley Road Southbound			State Route 189 Westbound			State Route 189 Eastbound			
Start Time	Left	Right	App. Total	Thru	Right	App. Total	Left	Thru	App. Total	Int. Total
Peak Hour Analysis From 10:30 AM to 12:15 PM - Peak 1 of 1										
Peak Hour for Entire Intersection Begins at 11:30 AM										
11:30 AM	**60**	47	**107**	20	31	**51**	22	32	54	**212**
11:45 AM	52	42	94	13	**32**	45	21	**51**	**72**	211
12:00 PM	48	**48**	96	**23**	25	48	23	37	60	204
12:15 PM	42	46	88	10	25	35	**24**	43	67	190
Total Volume	202	183	385	66	113	179	90	163	253	817
% App. Total	52.5	47.5		36.9	63.1		35.6	64.4		
PHF	.842	.953	.900	.717	.883	.877	.938	.799	.878	.963

Counts Unlimited, Inc.
25424 Jaclyn Avenue
Moreno Valley, CA 92557
(951) 247-6716

County of San Bernardino
N/S: Grass Valley Road
E/W: State Route 189
Weather: Sunny

File Name : CSBGV189SAT
Site Code : 00313156
Start Date : 3/24/2007
Page No : 2

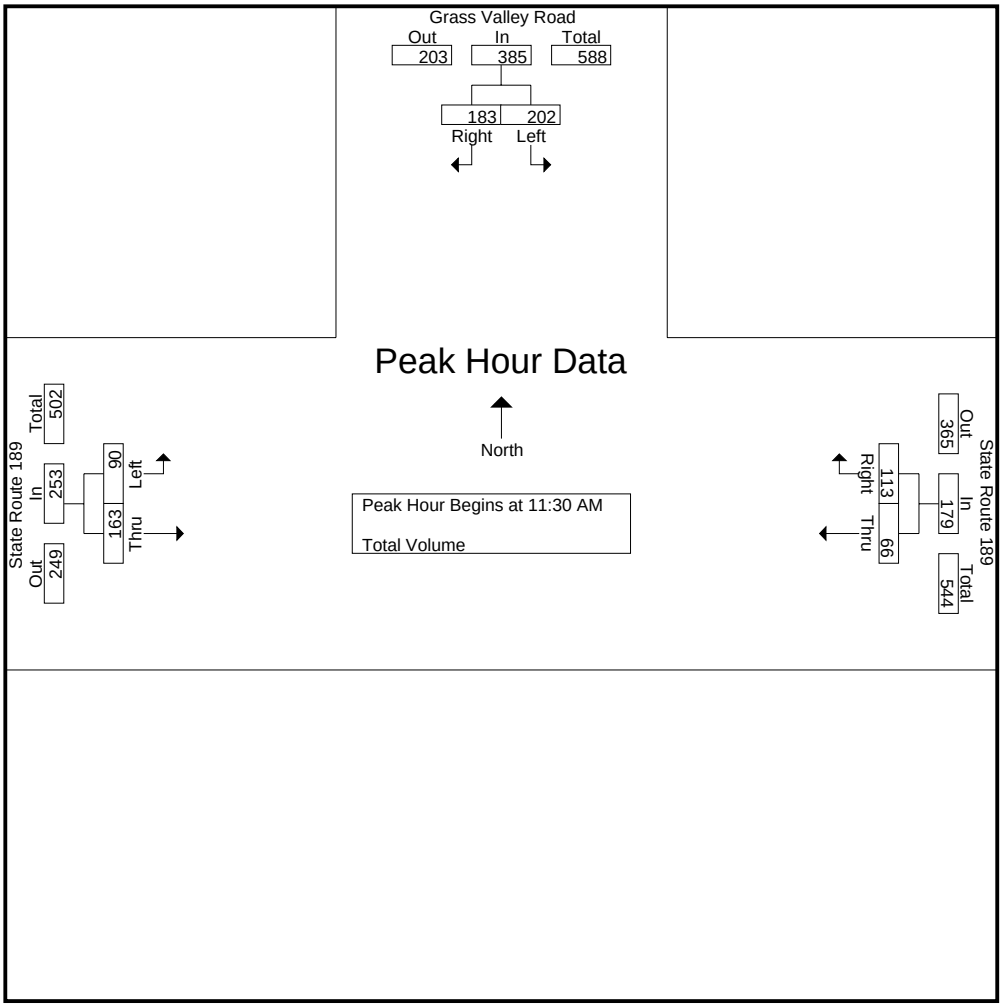

Peak Hour Analysis From 10:30 AM to 12:15 PM - Peak 1 of 1

Peak Hour for Each Approach Begins at:

	11:15 AM			11:30 AM			11:30 AM		
+0 mins.	58	41	99	20	31	**51**	22	32	54
+15 mins.	**60**	47	**107**	13	**32**	45	21	**51**	**72**
+30 mins.	52	42	94	**23**	25	48	23	37	60
+45 mins.	48	**48**	96	10	25	35	**24**	43	67
Total Volume	218	178	396	66	113	179	90	163	253
% App. Total	55.1	44.9		36.9	63.1		35.6	64.4	
PHF	.908	.927	.925	.717	.883	.877	.938	.799	.878

Counts Unlimited, Inc.
25424 Jaclyn Avenue
Moreno Valley, CA 92557
(951) 247-6716

County of San Bernardino
N/S: Grass Valley Road
E/W: State Route 189
Weather: Sunny

File Name : CSBGV189SUN
Site Code : 00313156
Start Date : 3/25/2007
Page No : 1

Groups Printed- Total Volume

	Grass Valley Road Southbound			State Route 189 Westbound			State Route 189 Eastbound			
Start Time	Left	Right	App. Total	Thru	Right	App. Total	Left	Thru	App. Total	Int. Total
09:30 AM	38	31	69	7	10	17	5	20	25	111
09:45 AM	44	35	79	17	8	25	6	31	37	141
Total	82	66	148	24	18	42	11	51	62	252
10:00 AM	29	26	55	15	21	36	8	19	27	118
10:15 AM	31	36	67	6	18	24	9	33	42	133
10:30 AM	42	36	78	14	19	33	11	36	47	158
10:45 AM	51	34	85	10	19	29	9	33	42	156
Total	153	132	285	45	77	122	37	121	158	565
11:00 AM	33	29	62	12	15	27	21	27	48	137
11:15 AM	55	26	81	6	14	20	10	28	38	139
Grand Total	323	253	576	87	124	211	79	227	306	1093
Apprch %	56.1	43.9		41.2	58.8		25.8	74.2		
Total %	29.6	23.1	52.7	8	11.3	19.3	7.2	20.8	28	

	Grass Valley Road Southbound			State Route 189 Westbound			State Route 189 Eastbound			
Start Time	Left	Right	App. Total	Thru	Right	App. Total	Left	Thru	App. Total	Int. Total
Peak Hour Analysis From 09:30 AM to 11:15 AM - Peak 1 of 1										
Peak Hour for Entire Intersection Begins at 10:30 AM										
10:30 AM	42	**36**	78	**14**	**19**	**33**	11	**36**	47	**158**
10:45 AM	51	34	**85**	10	19	29	9	33	42	156
11:00 AM	33	29	62	12	15	27	**21**	27	**48**	137
11:15 AM	**55**	26	81	6	14	20	10	28	38	139
Total Volume	181	125	306	42	67	109	51	124	175	590
% App. Total	59.2	40.8		38.5	61.5		29.1	70.9		
PHF	.823	.868	.900	.750	.882	.826	.607	.861	.911	.934

Counts Unlimited, Inc.
25424 Jaclyn Avenue
Moreno Valley, CA 92557
(951) 247-6716

County of San Bernardino
N/S: Grass Valley Road
E/W: State Route 189
Weather: Sunny

File Name : CSBGV189SUN
Site Code : 00313156
Start Date : 3/25/2007
Page No : 2

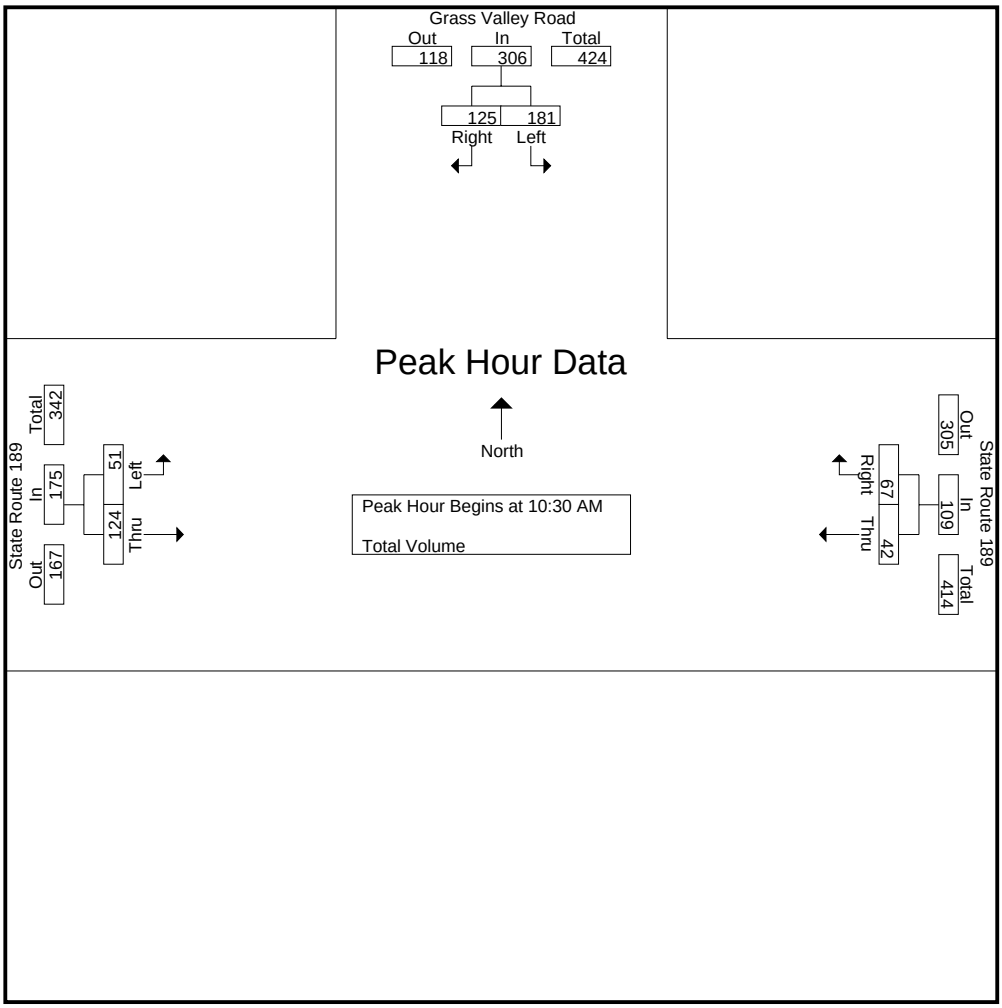

Peak Hour Analysis From 09:30 AM to 11:15 AM - Peak 1 of 1
Peak Hour for Each Approach Begins at:

	10:30 AM			10:00 AM			10:15 AM		
+0 mins.	42	**36**	78	**15**	**21**	**36**	9	33	42
+15 mins.	51	34	**85**	6	18	24	11	**36**	47
+30 mins.	33	29	62	14	19	33	9	33	42
+45 mins.	**55**	26	81	10	19	29	**21**	27	**48**
Total Volume	181	125	306	45	77	122	50	129	179
% App. Total	59.2	40.8		36.9	63.1		27.9	72.1	
PHF	.823	.868	.900	.750	.917	.847	.595	.896	.932

Counts Unlimited Inc.
25424 Jaclyn Avenue
Moreno Valley, CA 92557
(951) 247-6716

County of San Bernardino
N/S: Daley Canyon Road
E/W: SR-189
Weather: Sunny

File Name : CSBDC189SAT
Site Code : 00313111
Start Date : 3/24/2007
Page No : 1

Groups Printed- Passenger Vehicles - Large 2 Axle Vehicles - 3 Axle Vehicles - 4+ Axle Trucks

	Daley Canyon Road Southbound			Daley Canyon Road Northbound			SR-189 Eastbound			
Start Time	Thru	Right	App. Total	Left	Thru	App. Total	Left	Right	App. Total	Int. Total
10:30 AM	52	9	61	32	40	72	39	40	79	212
10:45 AM	50	10	60	40	48	88	48	36	84	232
Total	102	19	121	72	88	160	87	76	163	444
11:00 AM	48	5	53	26	54	80	51	44	95	228
11:15 AM	42	13	55	25	67	92	56	42	98	245
11:30 AM	54	15	69	32	59	91	56	36	92	252
11:45 AM	49	11	60	32	71	103	74	34	108	271
Total	193	44	237	115	251	366	237	156	393	996
12:00 PM	46	19	65	30	57	87	56	32	88	240
12:15 PM	59	11	70	28	40	68	49	28	77	215
Grand Total	400	93	493	245	436	681	429	292	721	1895
Apprch %	81.1	18.9		36	64		59.5	40.5		
Total %	21.1	4.9	26	12.9	23	35.9	22.6	15.4	38	
Passenger Vehicles	394	92	486	242	428	670	424	286	710	1866
% Passenger Vehicles	98.5	98.9	98.6	98.8	98.2	98.4	98.8	97.9	98.5	98.5
Large 2 Axle Vehicles	5	1	6	3	6	9	4	6	10	25
% Large 2 Axle Vehicles	1.2	1.1	1.2	1.2	1.4	1.3	0.9	2.1	1.4	1.3
3 Axle Vehicles	1	0	1	0	0	0	1	0	1	2
% 3 Axle Vehicles	0.2	0	0.2	0	0	0	0.2	0	0.1	0.1
4+ Axle Trucks	0	0	0	0	2	2	0	0	0	2
% 4+ Axle Trucks	0	0	0	0	0.5	0.3	0	0	0	0.1

	Daley Canyon Road Southbound			Daley Canyon Road Northbound			SR-189 Eastbound			
Start Time	Thru	Right	App. Total	Left	Thru	App. Total	Left	Right	App. Total	Int. Total
Peak Hour Analysis From 11:15 AM to 12:00 PM - Peak 1 of 1										
Peak Hour for Entire Intersection Begins at 11:15 AM										
11:15 AM	42	13	55	25	67	92	56	42	98	245
11:30 AM	54	15	69	32	59	91	56	36	92	252
11:45 AM	49	11	60	32	71	103	74	34	108	271
12:00 PM	46	19	65	30	57	87	56	32	88	240
Total Volume	191	58	249	119	254	373	242	144	386	1008
% App. Total	76.7	23.3		31.9	68.1		62.7	37.3		
PHF	.884	.763	.902	.930	.894	.905	.818	.857	.894	.930

Counts Unlimited Inc.
25424 Jaclyn Avenue
Moreno Valley, CA 92557
(951) 247-6716

County of San Bernardino
N/S: Daley Canyon Road
E/W: SR-189
Weather: Sunny

File Name : CSBDC189SAT
Site Code : 00313111
Start Date : 3/24/2007
Page No : 2

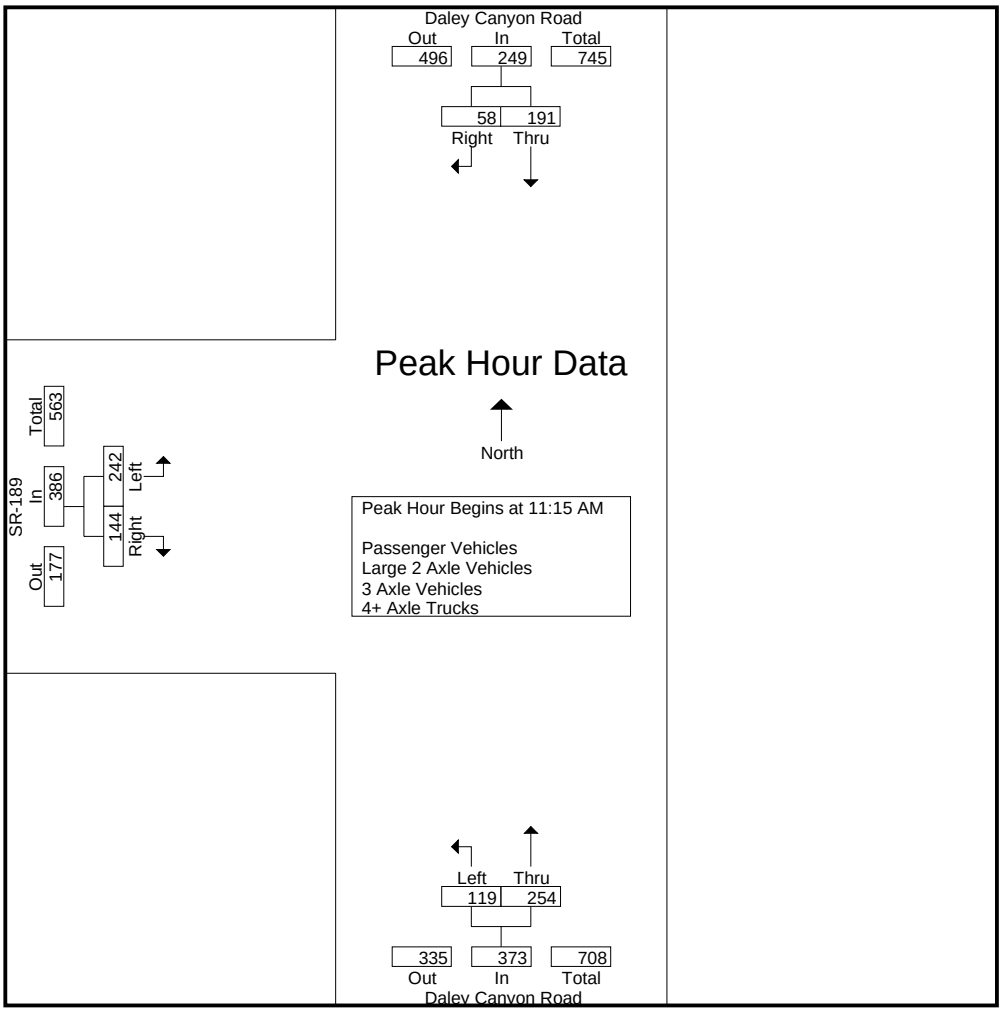

Peak Hour Analysis From 11:15 AM to 12:00 PM - Peak 1 of 1

Peak Hour for Each Approach Begins at:

	11:15 AM			11:15 AM			11:15 AM		
+0 mins.	42	13	55	25	67	92	56	42	98
+15 mins.	54	15	69	32	59	91	56	36	92
+30 mins.	49	11	60	32	71	103	74	34	108
+45 mins.	46	19	65	30	57	87	56	32	88
Total Volume	191	58	249	119	254	373	242	144	386
% App. Total	76.7	23.3		31.9	68.1		62.7	37.3	
PHF	.884	.763	.902	.930	.894	.905	.818	.857	.894

Counts Unlimited Inc.
25424 Jaclyn Avenue
Moreno Valley, CA 92557
(951) 247-6716

County of San Bernardino
N/S: Daley Canyon Road
E/W: SR-189
Weather: Sunny

File Name : CSBDC189SAT
Site Code : 00313111
Start Date : 3/24/2007
Page No : 1

Groups Printed- Passenger Vehicles

	Daley Canyon Road Southbound			Daley Canyon Road Northbound			SR-189 Eastbound			
Start Time	Thru	Right	App. Total	Left	Thru	App. Total	Left	Right	App. Total	Int. Total
10:30 AM	51	9	60	31	39	70	39	39	78	208
10:45 AM	47	10	57	39	47	86	48	34	82	225
Total	98	19	117	70	86	156	87	73	160	433
11:00 AM	48	5	53	26	54	80	50	44	94	227
11:15 AM	42	13	55	25	66	91	55	41	96	242
11:30 AM	52	14	66	32	57	89	55	35	90	245
11:45 AM	49	11	60	32	69	101	74	33	107	268
Total	191	43	234	115	246	361	234	153	387	982
12:00 PM	46	19	65	29	57	86	55	32	87	238
12:15 PM	59	11	70	28	39	67	48	28	76	213
Grand Total	394	92	486	242	428	670	424	286	710	1866
Apprch %	81.1	18.9		36.1	63.9		59.7	40.3		
Total %	21.1	4.9	26	13	22.9	35.9	22.7	15.3	38	

	Daley Canyon Road Southbound			Daley Canyon Road Northbound			SR-189 Eastbound			
Start Time	Thru	Right	App. Total	Left	Thru	App. Total	Left	Right	App. Total	Int. Total
Peak Hour Analysis From 11:15 AM to 12:00 PM - Peak 1 of 1										
Peak Hour for Entire Intersection Begins at 11:15 AM										
11:15 AM	42	13	55	25	66	91	55	41	96	242
11:30 AM	52	14	66	32	57	89	55	35	90	245
11:45 AM	49	11	60	32	69	101	74	33	107	268
12:00 PM	46	19	65	29	57	86	55	32	87	238
Total Volume	189	57	246	118	249	367	239	141	380	993
% App. Total	76.8	23.2		32.2	67.8		62.9	37.1		
PHF	.909	.750	.932	.922	.902	.908	.807	.860	.888	.926

Counts Unlimited Inc.
25424 Jaclyn Avenue
Moreno Valley, CA 92557
(951) 247-6716

County of San Bernardino
N/S: Daley Canyon Road
E/W: SR-189
Weather: Sunny

File Name : CSBDC189SAT
Site Code : 00313111
Start Date : 3/24/2007
Page No : 2

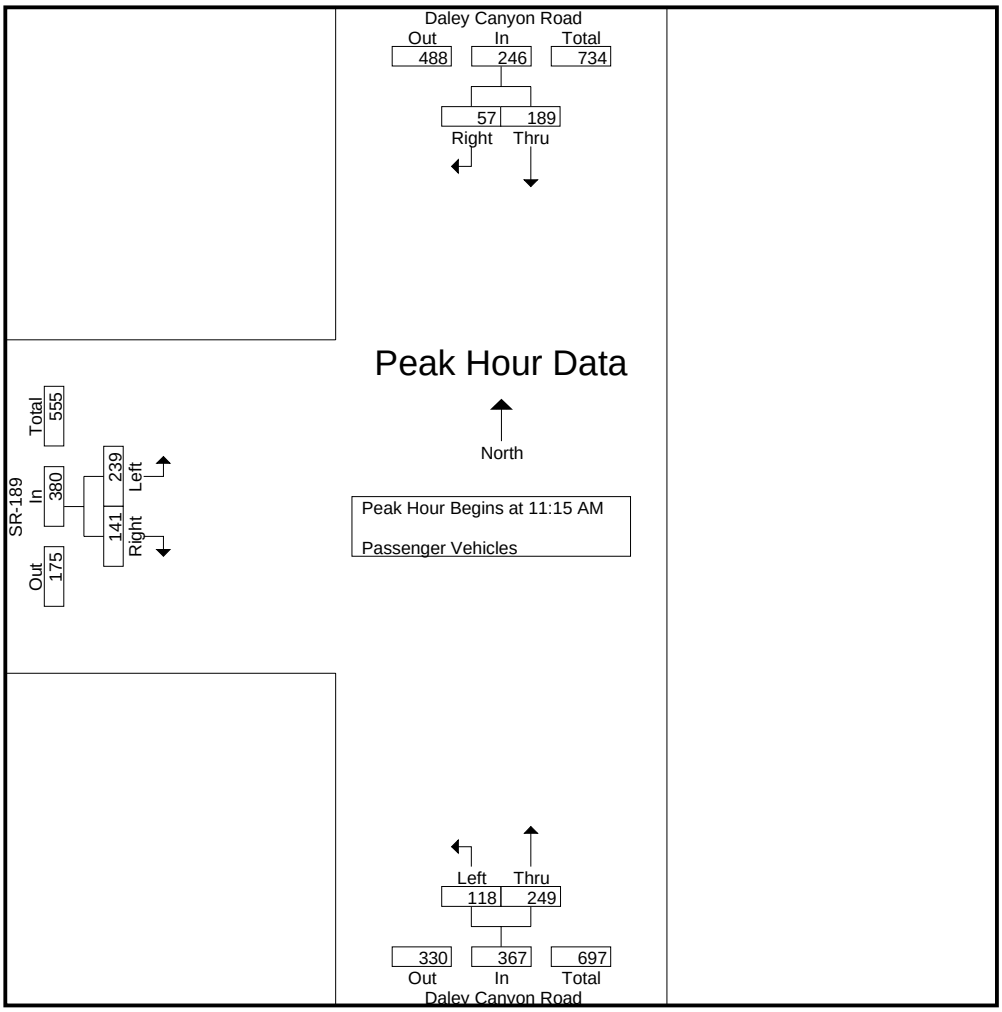

Peak Hour Analysis From 11:15 AM to 12:00 PM - Peak 1 of 1

Peak Hour for Each Approach Begins at:

	11:15 AM			11:15 AM			11:15 AM		
+0 mins.	42	13	55	25	66	91	55	41	96
+15 mins.	52	14	66	32	57	89	55	35	90
+30 mins.	49	11	60	32	69	101	74	33	107
+45 mins.	46	19	65	29	57	86	55	32	87
Total Volume	189	57	246	118	249	367	239	141	380
% App. Total	76.8	23.2		32.2	67.8		62.9	37.1	
PHF	.909	.750	.932	.922	.902	.908	.807	.860	.888

Counts Unlimited Inc.
25424 Jaclyn Avenue
Moreno Valley, CA 92557
(951) 247-6716

County of San Bernardino
N/S: Daley Canyon Road
E/W: SR-189
Weather: Sunny

File Name : CSBDC189SAT
Site Code : 00313111
Start Date : 3/24/2007
Page No : 1

Groups Printed- Large 2 Axle Vehicles

	Daley Canyon Road Southbound			Daley Canyon Road Northbound			SR-189 Eastbound			
Start Time	Thru	Right	App. Total	Left	Thru	App. Total	Left	Right	App. Total	Int. Total
10:30 AM	1	0	1	1	0	1	0	1	1	3
10:45 AM	2	0	2	1	1	2	0	2	2	6
Total	3	0	3	2	1	3	0	3	3	9
11:00 AM	0	0	0	0	0	0	1	0	1	1
11:15 AM	0	0	0	0	1	1	1	1	2	3
11:30 AM	2	1	3	0	2	2	1	1	2	7
11:45 AM	0	0	0	0	1	1	0	1	1	2
Total	2	1	3	0	4	4	3	3	6	13
12:00 PM	0	0	0	1	0	1	0	0	0	1
12:15 PM	0	0	0	0	1	1	1	0	1	2
Grand Total	5	1	6	3	6	9	4	6	10	25
Apprch %	83.3	16.7		33.3	66.7		40	60		
Total %	20	4	24	12	24	36	16	24	40	

	Daley Canyon Road Southbound			Daley Canyon Road Northbound			SR-189 Eastbound			
Start Time	Thru	Right	App. Total	Left	Thru	App. Total	Left	Right	App. Total	Int. Total
Peak Hour Analysis From 11:15 AM to 12:00 PM - Peak 1 of 1										
Peak Hour for Entire Intersection Begins at 11:15 AM										
11:15 AM	0	0	0	0	1	1	1	1	2	3
11:30 AM	2	1	3	0	2	2	1	1	2	7
11:45 AM	0	0	0	0	1	1	0	1	1	2
12:00 PM	0	0	0	1	0	1	0	0	0	1
Total Volume	2	1	3	1	4	5	2	3	5	13
% App. Total	66.7	33.3		20	80		40	60		
PHF	.250	.250	.250	.250	.500	.625	.500	.750	.625	.464

Counts Unlimited Inc.
25424 Jaclyn Avenue
Moreno Valley, CA 92557
(951) 247-6716

County of San Bernardino
N/S: Daley Canyon Road
E/W: SR-189
Weather: Sunny

File Name : CSBDC189SAT
Site Code : 00313111
Start Date : 3/24/2007
Page No : 2

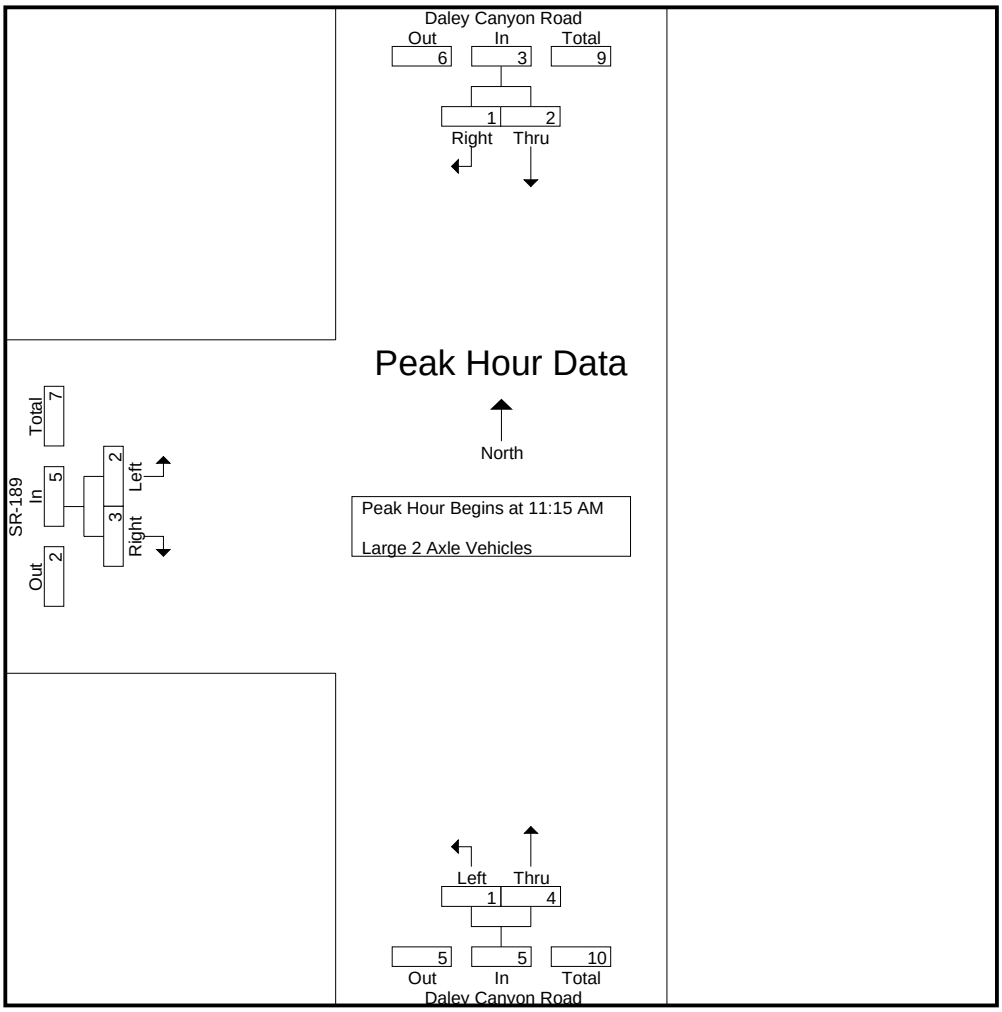

Peak Hour Analysis From 11:15 AM to 12:00 PM - Peak 1 of 1

Peak Hour for Each Approach Begins at:

	11:15 AM			11:15 AM			11:15 AM		
+0 mins.	0	0	0	0	1	1	1	1	2
+15 mins.	2	1	3	0	2	2	1	1	2
+30 mins.	0	0	0	0	1	1	0	1	1
+45 mins.	0	0	0	1	0	1	0	0	0
Total Volume	2	1	3	1	4	5	2	3	5
% App. Total	66.7	33.3		20	80		40	60	
PHF	.250	.250	.250	.250	.500	.625	.500	.750	.625

Counts Unlimited Inc.
25424 Jaclyn Avenue
Moreno Valley, CA 92557
(951) 247-6716

County of San Bernardino
N/S: Daley Canyon Road
E/W: SR-189
Weather: Sunny

File Name : CSBDC189SAT
Site Code : 00313111
Start Date : 3/24/2007
Page No : 1

Groups Printed- 3 Axle Vehicles

	Daley Canyon Road Southbound			Daley Canyon Road Northbound			SR-189 Eastbound			
Start Time	Thru	Right	App. Total	Left	Thru	App. Total	Left	Right	App. Total	Int. Total
10:30 AM	0	0	0	0	0	0	0	0	0	0
10:45 AM	1	0	1	0	0	0	0	0	0	1
Total	1	0	1	0	0	0	0	0	0	1
11:00 AM	0	0	0	0	0	0	0	0	0	0
11:15 AM	0	0	0	0	0	0	0	0	0	0
11:30 AM	0	0	0	0	0	0	0	0	0	0
11:45 AM	0	0	0	0	0	0	0	0	0	0
Total	0	0	0	0	0	0	0	0	0	0
12:00 PM	0	0	0	0	0	0	1	0	1	1
12:15 PM	0	0	0	0	0	0	0	0	0	0
Grand Total	1	0	1	0	0	0	1	0	1	2
Apprch %	100	0		0	0		100	0		
Total %	50	0	50	0	0	0	50	0	50	

	Daley Canyon Road Southbound			Daley Canyon Road Northbound			SR-189 Eastbound			
Start Time	Thru	Right	App. Total	Left	Thru	App. Total	Left	Right	App. Total	Int. Total
Peak Hour Analysis From 11:15 AM to 12:00 PM - Peak 1 of 1										
Peak Hour for Entire Intersection Begins at 11:15 AM										
11:15 AM	0	0	0	0	0	0	0	0	0	0
11:30 AM	0	0	0	0	0	0	0	0	0	0
11:45 AM	0	0	0	0	0	0	0	0	0	0
12:00 PM	0	0	0	0	0	0	1	0	1	1
Total Volume	0	0	0	0	0	0	1	0	1	1
% App. Total	0	0		0	0		100	0		
PHF	.000	.000	.000	.000	.000	.000	.250	.000	.250	.250

Counts Unlimited Inc.
25424 Jaclyn Avenue
Moreno Valley, CA 92557
(951) 247-6716

County of San Bernardino
N/S: Daley Canyon Road
E/W: SR-189
Weather: Sunny

File Name : CSBDC189SAT
Site Code : 00313111
Start Date : 3/24/2007
Page No : 2

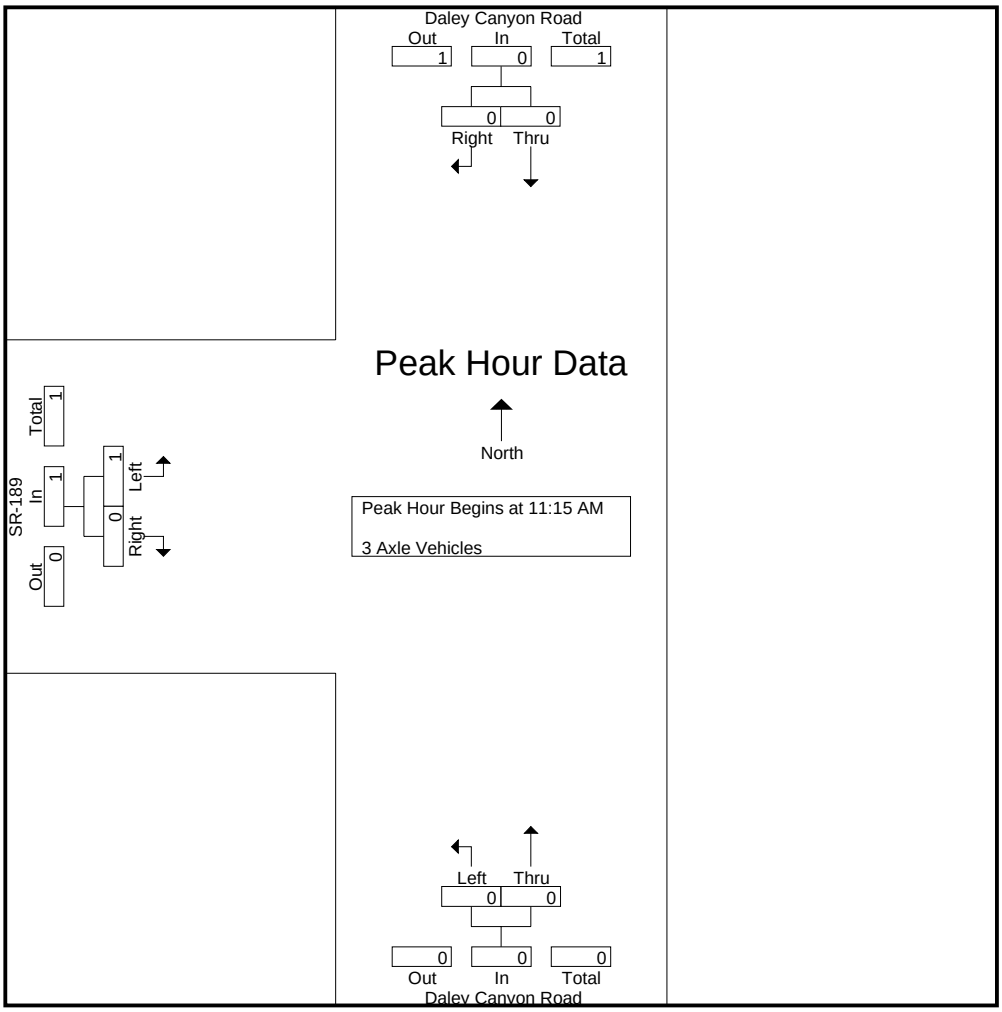

Peak Hour Analysis From 11:15 AM to 12:00 PM - Peak 1 of 1

Peak Hour for Each Approach Begins at:

	11:15 AM			11:15 AM			11:15 AM		
+0 mins.	0	0	0	0	0	0	0	0	0
+15 mins.	0	0	0	0	0	0	0	0	0
+30 mins.	0	0	0	0	0	0	0	0	0
+45 mins.	0	0	0	0	0	0	1	0	1
Total Volume	0	0	0	0	0	0	1	0	1
% App. Total	0	0		0	0		100	0	
PHF	.000	.000	.000	.000	.000	.000	.250	.000	.250

Counts Unlimited Inc.
25424 Jaclyn Avenue
Moreno Valley, CA 92557
(951) 247-6716

County of San Bernardino
N/S: Daley Canyon Road
E/W: SR-189
Weather: Sunny

File Name : CSBDC189SAT
Site Code : 00313111
Start Date : 3/24/2007
Page No : 1

Groups Printed- 4+ Axle Trucks

	Daley Canyon Road Southbound			Daley Canyon Road Northbound			SR-189 Eastbound			
Start Time	Thru	Right	App. Total	Left	Thru	App. Total	Left	Right	App. Total	Int. Total
10:30 AM	0	0	0	0	1	1	0	0	0	1
10:45 AM	0	0	0	0	0	0	0	0	0	0
Total	0	0	0	0	1	1	0	0	0	1
11:00 AM	0	0	0	0	0	0	0	0	0	0
11:15 AM	0	0	0	0	0	0	0	0	0	0
11:30 AM	0	0	0	0	0	0	0	0	0	0
11:45 AM	0	0	0	0	1	1	0	0	0	1
Total	0	0	0	0	1	1	0	0	0	1
12:00 PM	0	0	0	0	0	0	0	0	0	0
12:15 PM	0	0	0	0	0	0	0	0	0	0
Grand Total	0	0	0	0	2	2	0	0	0	2
Apprch %	0	0		0	100		0	0		
Total %	0	0	0	0	100	100	0	0	0	

	Daley Canyon Road Southbound			Daley Canyon Road Northbound			SR-189 Eastbound			
Start Time	Thru	Right	App. Total	Left	Thru	App. Total	Left	Right	App. Total	Int. Total
Peak Hour Analysis From 11:15 AM to 12:00 PM - Peak 1 of 1										
Peak Hour for Entire Intersection Begins at 11:15 AM										
11:15 AM	0	0	0	0	0	0	0	0	0	0
11:30 AM	0	0	0	0	0	0	0	0	0	0
11:45 AM	0	0	0	0	1	1	0	0	0	1
12:00 PM	0	0	0	0	0	0	0	0	0	0
Total Volume	0	0	0	0	1	1	0	0	0	1
% App. Total	0	0		0	100		0	0		
PHF	.000	.000	.000	.000	.250	.250	.000	.000	.000	.250

Counts Unlimited Inc.
25424 Jaclyn Avenue
Moreno Valley, CA 92557
(951) 247-6716

County of San Bernardino
N/S: Daley Canyon Road
E/W: SR-189
Weather: Sunny

File Name : CSBDC189SAT
Site Code : 00313111
Start Date : 3/24/2007
Page No : 2

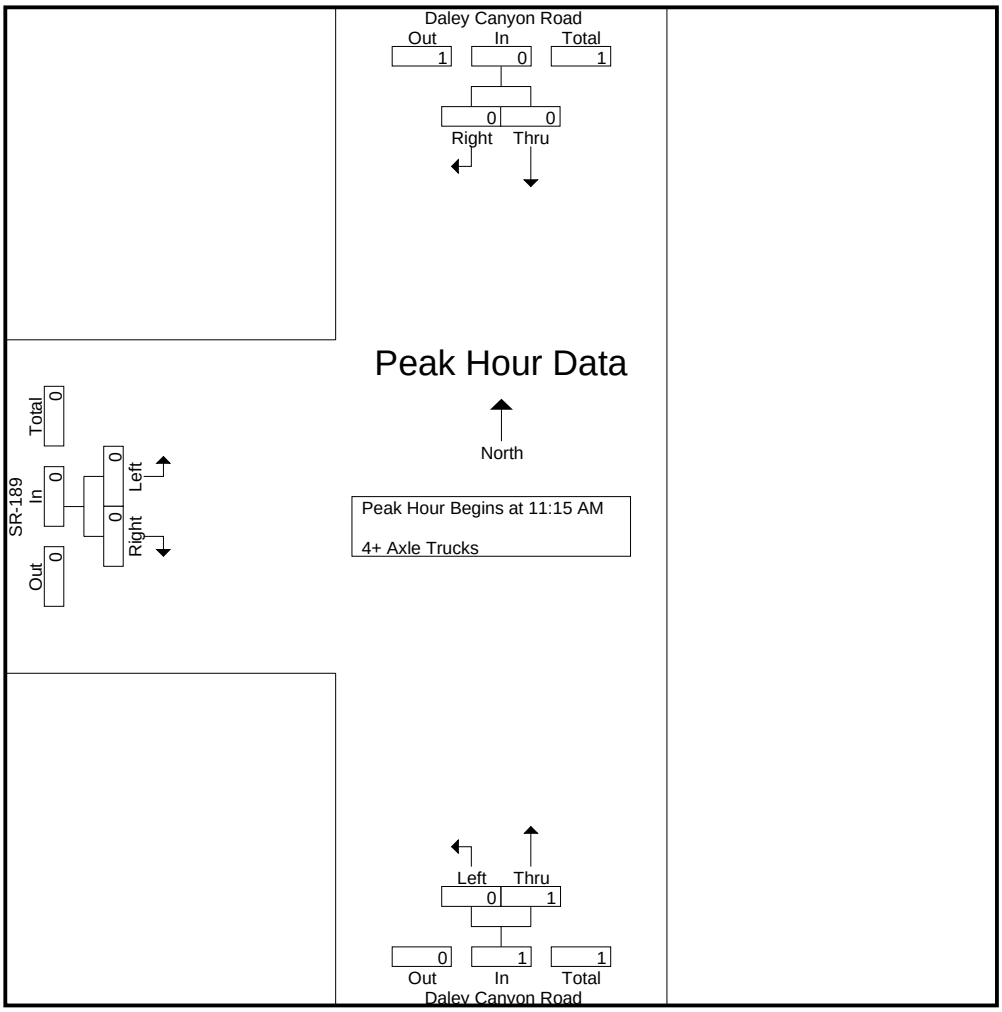

Peak Hour Analysis From 11:15 AM to 12:00 PM - Peak 1 of 1

Peak Hour for Each Approach Begins at:

	11:15 AM			11:15 AM			11:15 AM		
+0 mins.	0	0	0	0	0	0	0	0	0
+15 mins.	0	0	0	0	0	0	0	0	0
+30 mins.	0	0	0	0	1	1	0	0	0
+45 mins.	0	0	0	0	0	0	0	0	0
Total Volume	0	0	0	0	1	1	0	0	0
% App. Total	0	0		0	100		0	0	
PHF	.000	.000	.000	.000	.250	.250	.000	.000	.000

Counts Unlimited Inc.
25424 Jaclyn Avenue
Moreno Valley, CA 92557
(951) 247-6716

County of San Bernardino
N/S: Daley Canyon Road
E/W: SR-189
Weather: Sunny

File Name : CSBDC189SUN
Site Code : 00313144
Start Date : 3/25/2007
Page No : 1

Groups Printed- Passenger Vehicles - Large 2 Axle Vehicles - 3 Axle Vehicles - 4+ Axle Trucks

	Daley Canyon Road Southbound			Daley Canyon Road Northbound			SR-189 Eastbound			
Start Time	Thru	Right	App. Total	Left	Thru	App. Total	Left	Right	App. Total	Int. Total
09:30 AM	40	5	45	16	24	40	39	31	70	155
09:45 AM	29	9	38	21	27	48	42	32	74	160
Total	69	14	83	37	51	88	81	63	144	315
10:00 AM	49	7	56	30	40	70	29	24	53	179
10:15 AM	45	7	52	17	20	37	33	34	67	156
10:30 AM	42	10	52	20	30	50	36	38	74	176
10:45 AM	59	7	66	14	41	55	38	38	76	197
Total	195	31	226	81	131	212	136	134	270	708
11:00 AM	62	7	69	18	29	47	38	37	75	191
11:15 AM	21	3	24	8	21	29	24	18	42	95
Grand Total	347	55	402	144	232	376	279	252	531	1309
Apprch %	86.3	13.7		38.3	61.7		52.5	47.5		
Total %	26.5	4.2	30.7	11	17.7	28.7	21.3	19.3	40.6	
Passenger Vehicles	344	55	399	142	229	371	278	250	528	1298
% Passenger Vehicles	99.1	100	99.3	98.6	98.7	98.7	99.6	99.2	99.4	99.2
Large 2 Axle Vehicles	3	0	3	2	2	4	1	2	3	10
% Large 2 Axle Vehicles	0.9	0	0.7	1.4	0.9	1.1	0.4	0.8	0.6	0.8
3 Axle Vehicles	0	0	0	0	0	0	0	0	0	0
% 3 Axle Vehicles	0	0	0	0	0	0	0	0	0	0
4+ Axle Trucks	0	0	0	0	1	1	0	0	0	1
% 4+ Axle Trucks	0	0	0	0	0.4	0.3	0	0	0	0.1

	Daley Canyon Road Southbound			Daley Canyon Road Northbound			SR-189 Eastbound			
Start Time	Thru	Right	App. Total	Left	Thru	App. Total	Left	Right	App. Total	Int. Total
Peak Hour Analysis From 10:15 AM to 11:00 AM - Peak 1 of 1										
Peak Hour for Entire Intersection Begins at 10:15 AM										
10:15 AM	45	7	52	17	20	37	33	34	67	156
10:30 AM	42	10	52	20	30	50	36	38	74	176
10:45 AM	59	7	66	14	41	55	38	38	76	197
11:00 AM	62	7	69	18	29	47	38	37	75	191
Total Volume	208	31	239	69	120	189	145	147	292	720
% App. Total	87	13		36.5	63.5		49.7	50.3		
PHF	.839	.775	.866	.863	.732	.859	.954	.967	.961	.914

Counts Unlimited Inc.
25424 Jaclyn Avenue
Moreno Valley, CA 92557
(951) 247-6716

County of San Bernardino
N/S: Daley Canyon Road
E/W: SR-189
Weather: Sunny

File Name : CSBDC189SUN
Site Code : 00313144
Start Date : 3/25/2007
Page No : 2

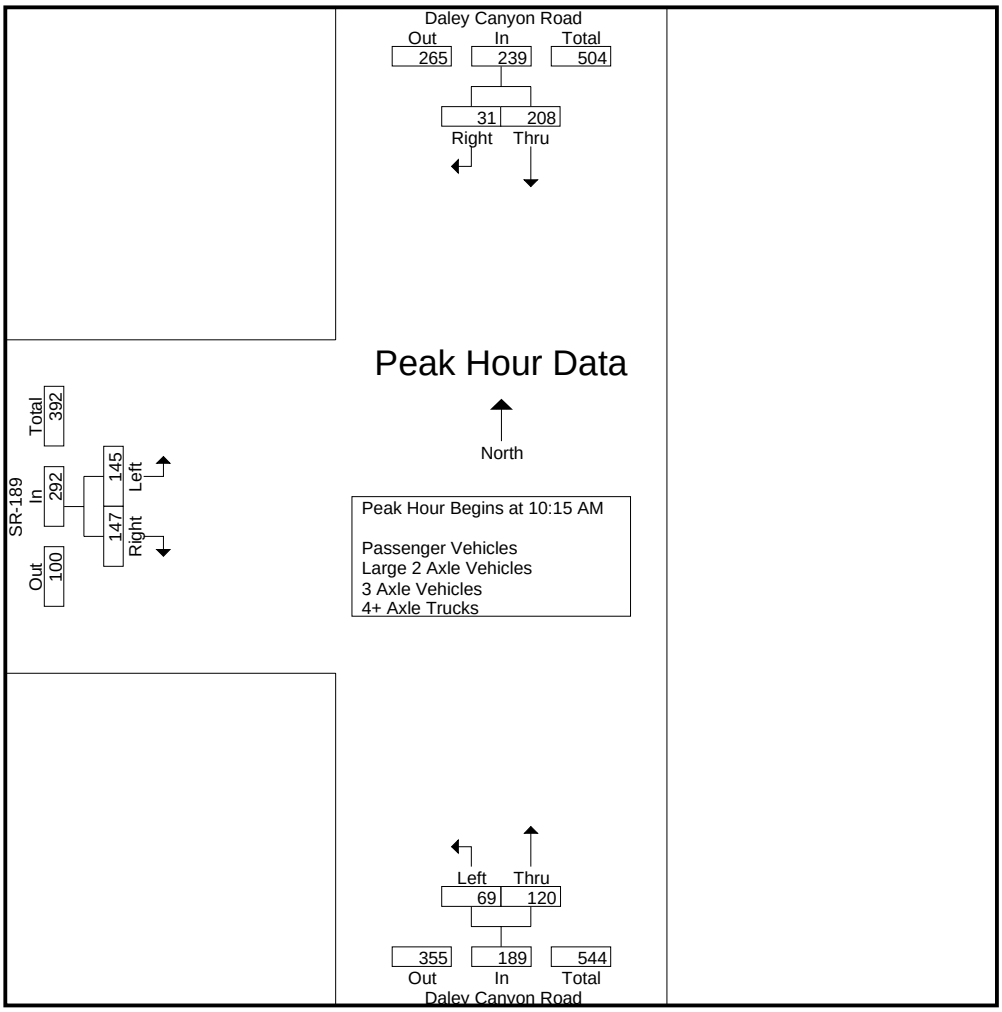

Peak Hour Analysis From 10:15 AM to 11:00 AM - Peak 1 of 1

Peak Hour for Each Approach Begins at:

	10:15 AM			10:15 AM			10:15 AM		
+0 mins.	45	7	52	17	20	37	33	34	67
+15 mins.	42	10	52	20	30	50	36	38	74
+30 mins.	59	7	66	14	41	55	38	38	76
+45 mins.	62	7	69	18	29	47	38	37	75
Total Volume	208	31	239	69	120	189	145	147	292
% App. Total	87	13		36.5	63.5		49.7	50.3	
PHF	.839	.775	.866	.863	.732	.859	.954	.967	.961

Counts Unlimited Inc.
25424 Jaclyn Avenue
Moreno Valley, CA 92557
(951) 247-6716

County of San Bernardino
N/S: Daley Canyon Road
E/W: SR-189
Weather: Sunny

File Name : CSBDC189SUN
Site Code : 00313144
Start Date : 3/25/2007
Page No : 1

Groups Printed- Passenger Vehicles

	Daley Canyon Road Southbound			Daley Canyon Road Northbound			SR-189 Eastbound			
Start Time	Thru	Right	App. Total	Left	Thru	App. Total	Left	Right	App. Total	Int. Total
09:30 AM	40	5	45	16	23	39	39	31	70	154
09:45 AM	29	9	38	21	27	48	42	32	74	160
Total	69	14	83	37	50	87	81	63	144	314
10:00 AM	49	7	56	29	40	69	29	23	52	177
10:15 AM	45	7	52	16	18	34	33	34	67	153
10:30 AM	42	10	52	20	30	50	35	38	73	175
10:45 AM	57	7	64	14	41	55	38	38	76	195
Total	193	31	224	79	129	208	135	133	268	700
11:00 AM	61	7	68	18	29	47	38	36	74	189
11:15 AM	21	3	24	8	21	29	24	18	42	95
Grand Total	344	55	399	142	229	371	278	250	528	1298
Apprch %	86.2	13.8		38.3	61.7		52.7	47.3		
Total %	26.5	4.2	30.7	10.9	17.6	28.6	21.4	19.3	40.7	

	Daley Canyon Road Southbound			Daley Canyon Road Northbound			SR-189 Eastbound			
Start Time	Thru	Right	App. Total	Left	Thru	App. Total	Left	Right	App. Total	Int. Total
Peak Hour Analysis From 10:15 AM to 11:00 AM - Peak 1 of 1										
Peak Hour for Entire Intersection Begins at 10:15 AM										
10:15 AM	45	7	52	16	18	34	33	34	67	153
10:30 AM	42	10	52	20	30	50	35	38	73	175
10:45 AM	57	7	64	14	41	55	38	38	76	195
11:00 AM	61	7	68	18	29	47	38	36	74	189
Total Volume	205	31	236	68	118	186	144	146	290	712
% App. Total	86.9	13.1		36.6	63.4		49.7	50.3		
PHF	.840	.775	.868	.850	.720	.845	.947	.961	.954	.913

Counts Unlimited Inc.
25424 Jaclyn Avenue
Moreno Valley, CA 92557
(951) 247-6716

County of San Bernardino
N/S: Daley Canyon Road
E/W: SR-189
Weather: Sunny

File Name : CSBDC189SUN
Site Code : 00313144
Start Date : 3/25/2007
Page No : 2

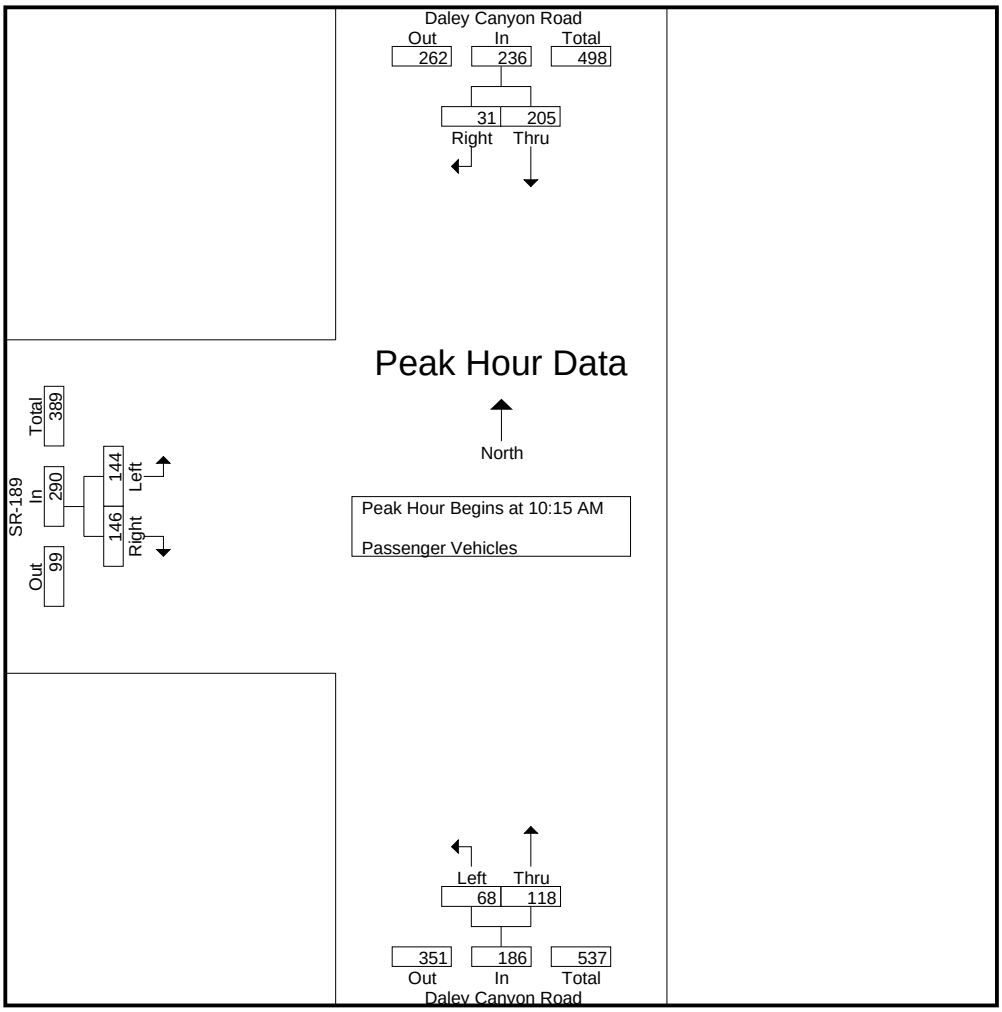

Peak Hour Analysis From 10:15 AM to 11:00 AM - Peak 1 of 1

Peak Hour for Each Approach Begins at:

	10:15 AM			10:15 AM			10:15 AM		
+0 mins.	45	7	52	16	18	34	33	34	67
+15 mins.	42	10	52	20	30	50	35	38	73
+30 mins.	57	7	64	14	41	55	38	38	76
+45 mins.	61	7	68	18	29	47	38	36	74
Total Volume	205	31	236	68	118	186	144	146	290
% App. Total	86.9	13.1		36.6	63.4		49.7	50.3	
PHF	.840	.775	.868	.850	.720	.845	.947	.961	.954

Counts Unlimited Inc.
25424 Jaclyn Avenue
Moreno Valley, CA 92557
(951) 247-6716

County of San Bernardino
N/S: Daley Canyon Road
E/W: SR-189
Weather: Sunny

File Name : CSBDC189SUN
Site Code : 00313144
Start Date : 3/25/2007
Page No : 1

Groups Printed- Large 2 Axle Vehicles

	Daley Canyon Road Southbound			Daley Canyon Road Northbound			SR-189 Eastbound			
Start Time	Thru	Right	App. Total	Left	Thru	App. Total	Left	Right	App. Total	Int. Total
09:30 AM	0	0	0	0	1	1	0	0	0	1
09:45 AM	0	0	0	0	0	0	0	0	0	0
Total	0	0	0	0	1	1	0	0	0	1
10:00 AM	0	0	0	1	0	1	0	1	1	2
10:15 AM	0	0	0	1	1	2	0	0	0	2
10:30 AM	0	0	0	0	0	0	1	0	1	1
10:45 AM	2	0	2	0	0	0	0	0	0	2
Total	2	0	2	2	1	3	1	1	2	7
11:00 AM	1	0	1	0	0	0	0	1	1	2
11:15 AM	0	0	0	0	0	0	0	0	0	0
Grand Total	3	0	3	2	2	4	1	2	3	10
Apprch %	100	0		50	50		33.3	66.7		
Total %	30	0	30	20	20	40	10	20	30	

	Daley Canyon Road Southbound			Daley Canyon Road Northbound			SR-189 Eastbound			
Start Time	Thru	Right	App. Total	Left	Thru	App. Total	Left	Right	App. Total	Int. Total
Peak Hour Analysis From 10:15 AM to 11:00 AM - Peak 1 of 1										
Peak Hour for Entire Intersection Begins at 10:15 AM										
10:15 AM	0	0	0	1	1	2	0	0	0	2
10:30 AM	0	0	0	0	0	0	1	0	1	1
10:45 AM	2	0	2	0	0	0	0	0	0	2
11:00 AM	1	0	1	0	0	0	0	1	1	2
Total Volume	3	0	3	1	1	2	1	1	2	7
% App. Total	100	0		50	50		50	50		
PHF	.375	.000	.375	.250	.250	.250	.250	.250	.500	.875

Counts Unlimited Inc.
25424 Jaclyn Avenue
Moreno Valley, CA 92557
(951) 247-6716

County of San Bernardino
N/S: Daley Canyon Road
E/W: SR-189
Weather: Sunny

File Name : CSBDC189SUN
Site Code : 00313144
Start Date : 3/25/2007
Page No : 2

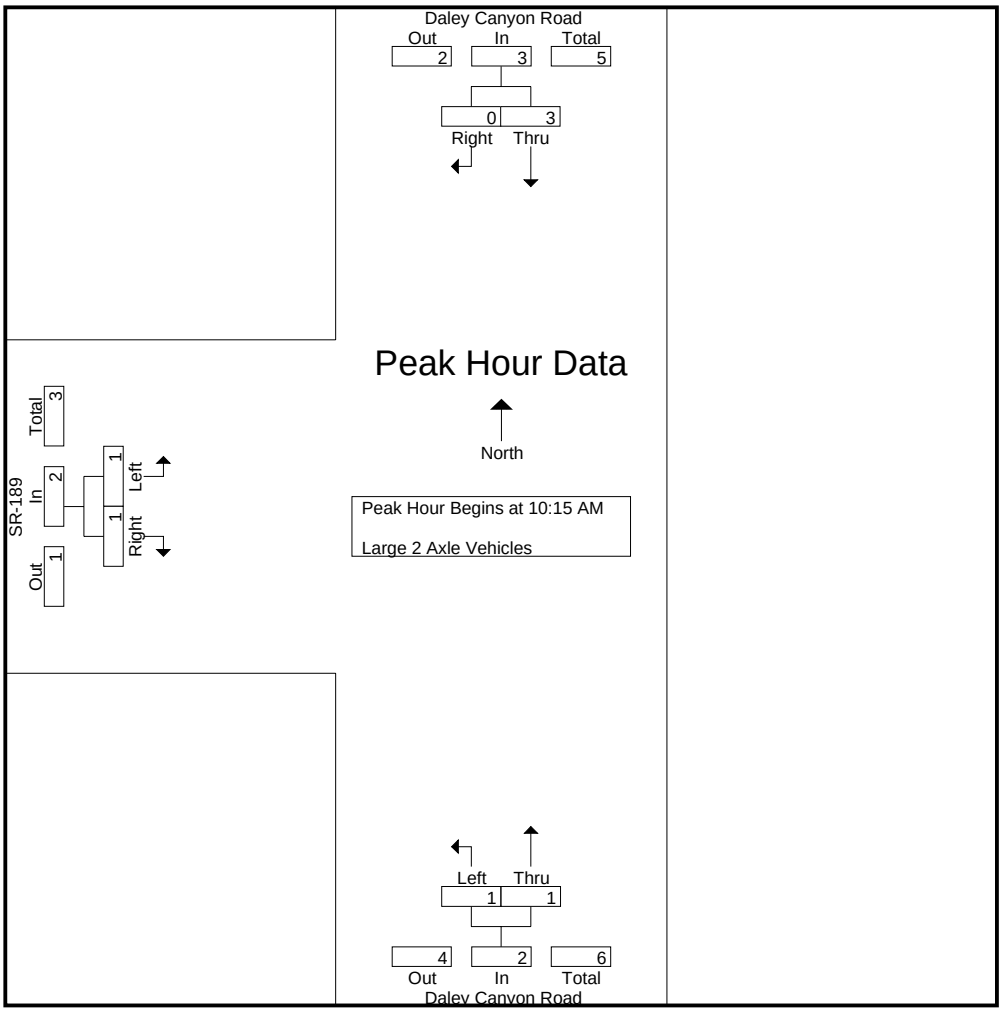

Peak Hour Analysis From 10:15 AM to 11:00 AM - Peak 1 of 1

Peak Hour for Each Approach Begins at:

	10:15 AM			10:15 AM			10:15 AM		
+0 mins.	0	0	0	1	1	2	0	0	0
+15 mins.	0	0	0	0	0	0	1	0	1
+30 mins.	2	0	2	0	0	0	0	0	0
+45 mins.	1	0	1	0	0	0	0	1	1
Total Volume	3	0	3	1	1	2	1	1	2
% App. Total	100	0		50	50		50	50	
PHF	.375	.000	.375	.250	.250	.250	.250	.250	.500

Counts Unlimited Inc.
25424 Jaclyn Avenue
Moreno Valley, CA 92557
(951) 247-6716

County of San Bernardino
N/S: Daley Canyon Road
E/W: SR-189
Weather: Sunny

File Name : CSBDC189SUN
Site Code : 00313144
Start Date : 3/25/2007
Page No : 1

Groups Printed- 3 Axle Vehicles

	Daley Canyon Road Southbound			Daley Canyon Road Northbound			SR-189 Eastbound			
Start Time	Thru	Right	App. Total	Left	Thru	App. Total	Left	Right	App. Total	Int. Total
09:30 AM	0	0	0	0	0	0	0	0	0	0
09:45 AM	0	0	0	0	0	0	0	0	0	0
Total	0	0	0	0	0	0	0	0	0	0
10:00 AM	0	0	0	0	0	0	0	0	0	0
10:15 AM	0	0	0	0	0	0	0	0	0	0
10:30 AM	0	0	0	0	0	0	0	0	0	0
10:45 AM	0	0	0	0	0	0	0	0	0	0
Total	0	0	0	0	0	0	0	0	0	0
11:00 AM	0	0	0	0	0	0	0	0	0	0
11:15 AM	0	0	0	0	0	0	0	0	0	0
Grand Total	0	0	0	0	0	0	0	0	0	0
Apprch %	0	0		0	0		0	0		
Total %										

	Daley Canyon Road Southbound			Daley Canyon Road Northbound			SR-189 Eastbound			
Start Time	Thru	Right	App. Total	Left	Thru	App. Total	Left	Right	App. Total	Int. Total
Peak Hour Analysis From 10:15 AM to 11:00 AM - Peak 1 of 1										
Peak Hour for Entire Intersection Begins at 10:15 AM										
10:15 AM	0	0	0	0	0	0	0	0	0	0
10:30 AM	0	0	0	0	0	0	0	0	0	0
10:45 AM	0	0	0	0	0	0	0	0	0	0
11:00 AM	0	0	0	0	0	0	0	0	0	0
Total Volume	0	0	0	0	0	0	0	0	0	0
% App. Total	0	0		0	0		0	0		
PHF	.000	.000	.000	.000	.000	.000	.000	.000	.000	.000

Counts Unlimited Inc.
25424 Jaclyn Avenue
Moreno Valley, CA 92557
(951) 247-6716

County of San Bernardino
N/S: Daley Canyon Road
E/W: SR-189
Weather: Sunny

File Name : CSBDC189SUN
Site Code : 00313144
Start Date : 3/25/2007
Page No : 2

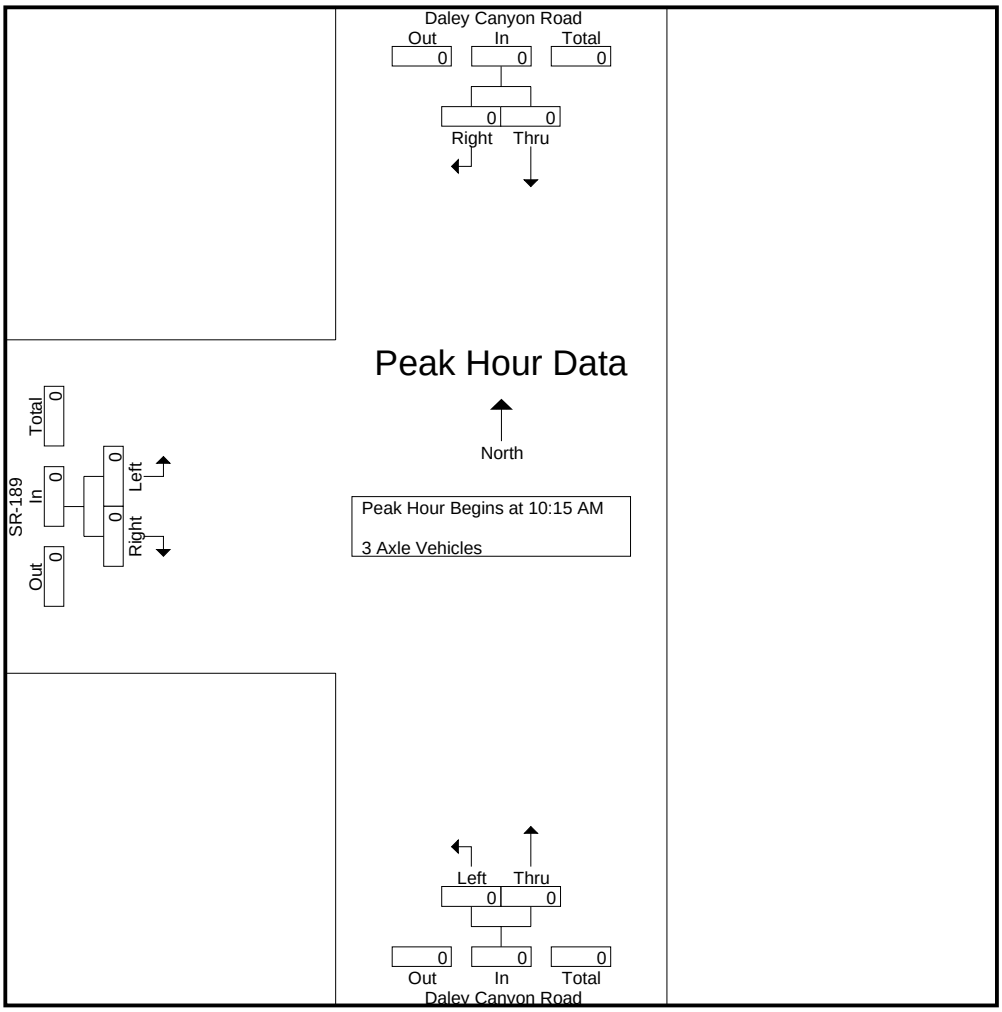

Peak Hour Analysis From 10:15 AM to 11:00 AM - Peak 1 of 1

Peak Hour for Each Approach Begins at:

	10:15 AM			10:15 AM			10:15 AM		
+0 mins.	0	0	0	0	0	0	0	0	0
+15 mins.	0	0	0	0	0	0	0	0	0
+30 mins.	0	0	0	0	0	0	0	0	0
+45 mins.	0	0	0	0	0	0	0	0	0
Total Volume	0	0	0	0	0	0	0	0	0
% App. Total	0	0		0	0		0	0	
PHF	.000	.000	.000	.000	.000	.000	.000	.000	.000

Counts Unlimited Inc.
25424 Jaclyn Avenue
Moreno Valley, CA 92557
(951) 247-6716

County of San Bernardino
N/S: Daley Canyon Road
E/W: SR-189
Weather: Sunny

File Name : CSBDC189SUN
Site Code : 00313144
Start Date : 3/25/2007
Page No : 1

Groups Printed- 4+ Axle Trucks

	Daley Canyon Road Southbound			Daley Canyon Road Northbound			SR-189 Eastbound			
Start Time	Thru	Right	App. Total	Left	Thru	App. Total	Left	Right	App. Total	Int. Total
09:30 AM	0	0	0	0	0	0	0	0	0	0
09:45 AM	0	0	0	0	0	0	0	0	0	0
Total	0	0	0	0	0	0	0	0	0	0
10:00 AM	0	0	0	0	0	0	0	0	0	0
10:15 AM	0	0	0	0	1	1	0	0	0	1
10:30 AM	0	0	0	0	0	0	0	0	0	0
10:45 AM	0	0	0	0	0	0	0	0	0	0
Total	0	0	0	0	1	1	0	0	0	1
11:00 AM	0	0	0	0	0	0	0	0	0	0
11:15 AM	0	0	0	0	0	0	0	0	0	0
Grand Total	0	0	0	0	1	1	0	0	0	1
Apprch %	0	0		0	100		0	0		
Total %	0	0	0	0	100	100	0	0	0	

	Daley Canyon Road Southbound			Daley Canyon Road Northbound			SR-189 Eastbound			
Start Time	Thru	Right	App. Total	Left	Thru	App. Total	Left	Right	App. Total	Int. Total
Peak Hour Analysis From 10:15 AM to 11:00 AM - Peak 1 of 1										
Peak Hour for Entire Intersection Begins at 10:15 AM										
10:15 AM	0	0	0	0	1	1	0	0	0	1
10:30 AM	0	0	0	0	0	0	0	0	0	0
10:45 AM	0	0	0	0	0	0	0	0	0	0
11:00 AM	0	0	0	0	0	0	0	0	0	0
Total Volume	0	0	0	0	1	1	0	0	0	1
% App. Total	0	0		0	100		0	0		
PHF	.000	.000	.000	.000	.250	.250	.000	.000	.000	.250

Counts Unlimited Inc.
25424 Jaclyn Avenue
Moreno Valley, CA 92557
(951) 247-6716

County of San Bernardino
N/S: Daley Canyon Road
E/W: SR-189
Weather: Sunny

File Name : CSBDC189SUN
Site Code : 00313144
Start Date : 3/25/2007
Page No : 2

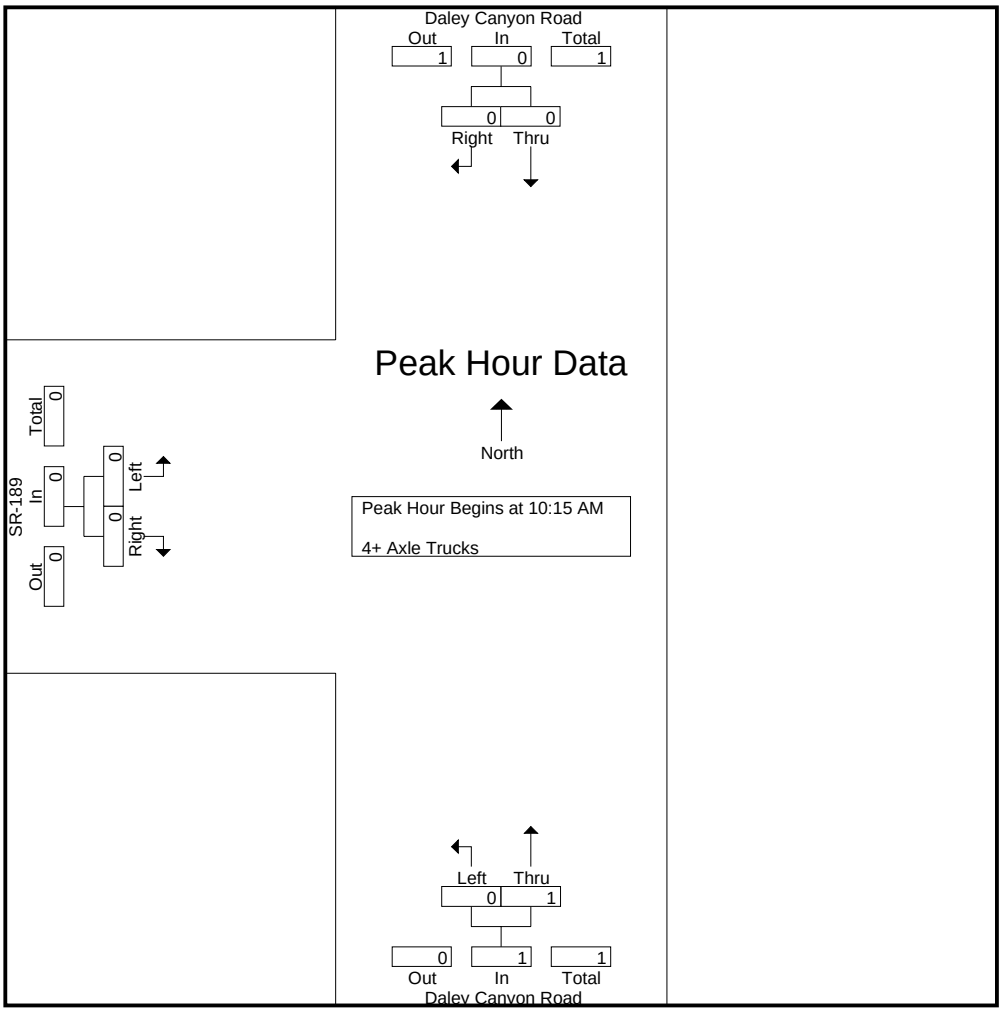

Peak Hour Analysis From 10:15 AM to 11:00 AM - Peak 1 of 1

Peak Hour for Each Approach Begins at:

	10:15 AM			10:15 AM			10:15 AM		
+0 mins.	0	0	0	0	1	1	0	0	0
+15 mins.	0	0	0	0	0	0	0	0	0
+30 mins.	0	0	0	0	0	0	0	0	0
+45 mins.	0	0	0	0	0	0	0	0	0
Total Volume	0	0	0	0	1	1	0	0	0
% App. Total	0	0		0	100		0	0	
PHF	.000	.000	.000	.000	.250	.250	.000	.000	.000

Counts Unlimited Inc.
25424 Jaclyn Avenue
Moreno Valley CA 92557
(951) 247-6716

County of San Bernardino
N/S: North Bay Road
E/W: State Route 189
Weather: Sunny

File Name : CSBNB189SAT
Site Code : 00313144
Start Date : 3/24/2007
Page No : 1

Groups Printed- Total Volume

	North Bay Road Southbound			State Route 189 Westbound			State Route 189 Eastbound			
Start Time	Left	Right	App. Total	Thru	Right	App. Total	Left	Thru	App. Total	Int. Total
10:30 AM	10	37	47	26	13	39	32	40	72	158
10:45 AM	13	46	59	32	16	48	39	48	87	194
Total	23	83	106	58	29	87	71	88	159	352
11:00 AM	16	53	69	39	21	60	47	55	102	231
11:15 AM	34	46	80	41	23	64	54	53	107	251
11:30 AM	26	57	83	52	19	71	61	74	135	289
11:45 AM	29	53	82	36	16	52	60	62	122	256
Total	105	209	314	168	79	247	222	244	466	1027
12:00 PM	27	51	78	60	16	76	82	59	141	295
12:15 PM	20	58	78	43	21	64	64	55	119	261
Grand Total	175	401	576	329	145	474	439	446	885	1935
Apprch %	30.4	69.6		69.4	30.6		49.6	50.4		
Total %	9	20.7	29.8	17	7.5	24.5	22.7	23	45.7	

	North Bay Road Southbound			State Route 189 Westbound			State Route 189 Eastbound			
Start Time	Left	Right	App. Total	Thru	Right	App. Total	Left	Thru	App. Total	Int. Total
Peak Hour Analysis From 10:30 AM to 11:45 AM - Peak 1 of 1										
Peak Hour for Entire Intersection Begins at 11:00 AM										
11:00 AM	16	53	69	39	21	60	47	55	102	231
11:15 AM	**34**	46	80	41	**23**	64	54	53	107	251
11:30 AM	26	**57**	**83**	**52**	19	**71**	**61**	**74**	**135**	**289**
11:45 AM	29	53	82	36	16	52	60	62	122	256
Total Volume	105	209	314	168	79	247	222	244	466	1027
% App. Total	33.4	66.6		68	32		47.6	52.4		
PHF	.772	.917	.946	.808	.859	.870	.910	.824	.863	.888

Counts Unlimited Inc.
25424 Jaclyn Avenue
Moreno Valley CA 92557
(951) 247-6716

County of San Bernardino
N/S: North Bay Road
E/W: State Route 189
Weather: Sunny

File Name : CSBNB189SAT
Site Code : 00313144
Start Date : 3/24/2007
Page No : 2

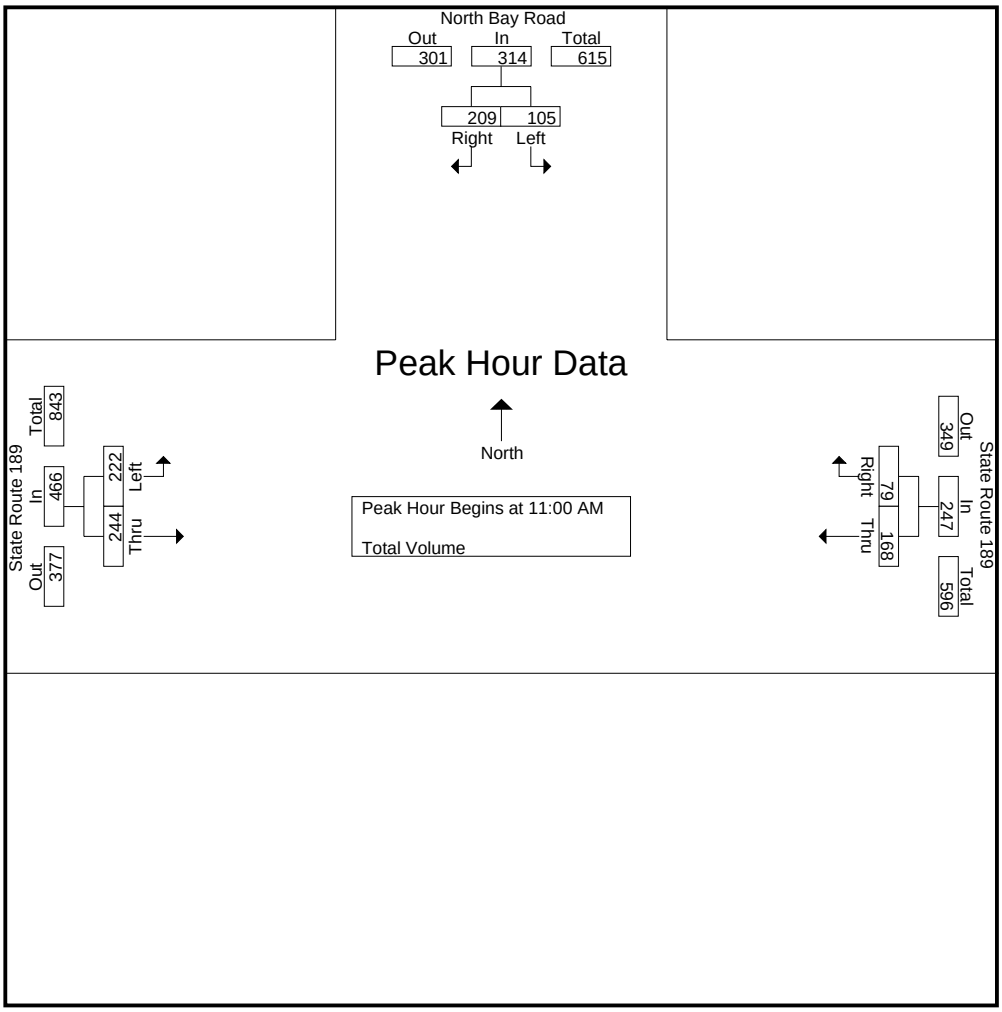

Peak Hour Analysis From 10:30 AM to 11:45 AM - Peak 1 of 1

Peak Hour for Each Approach Begins at:

	11:00 AM			11:00 AM			11:00 AM		
+0 mins.	16	53	69	39	21	60	47	55	102
+15 mins.	**34**	46	80	41	**23**	64	54	53	107
+30 mins.	26	**57**	**83**	**52**	19	**71**	**61**	**74**	**135**
+45 mins.	29	53	82	36	16	52	60	62	122
Total Volume	105	209	314	168	79	247	222	244	466
% App. Total	33.4	66.6		68	32		47.6	52.4	
PHF	.772	.917	.946	.808	.859	.870	.910	.824	.863

Counts Unlimited, Inc.
25424 Jaclyn Avenue
Moreno Valley, CA 92557
(951) 247-6716

County of San Bernardino
N/S: North Bay Road
E/W: State Route 189
Weather: Sunny

File Name : CSBNB189SUN
Site Code : 00313144
Start Date : 3/25/2007
Page No : 1

Groups Printed- Total Volume

	North Bay Road Southbound			State Route 189 Westbound			State Route 189 Eastbound			
Start Time	Left	Right	App. Total	Thru	Right	App. Total	Left	Thru	App. Total	Int. Total
09:30 AM	13	42	55	24	3	27	27	24	51	133
09:45 AM	23	35	58	19	9	28	23	31	54	140
Total	36	77	113	43	12	55	50	55	105	273
10:00 AM	11	25	36	25	6	31	22	33	55	122
10:15 AM	16	45	61	31	11	42	25	31	56	159
10:30 AM	12	38	50	32	12	44	27	24	51	145
10:45 AM	17	42	59	44	10	54	34	36	70	183
Total	56	150	206	132	39	171	108	124	232	609
11:00 AM	17	60	77	32	20	52	33	40	73	202
11:15 AM	10	43	53	39	19	58	37	50	87	198
Grand Total	119	330	449	246	90	336	228	269	497	1282
Apprch %	26.5	73.5		73.2	26.8		45.9	54.1		
Total %	9.3	25.7	35	19.2	7	26.2	17.8	21	38.8	

	North Bay Road Southbound			State Route 189 Westbound			State Route 189 Eastbound			
Start Time	Left	Right	App. Total	Thru	Right	App. Total	Left	Thru	App. Total	Int. Total
Peak Hour Analysis From 09:30 AM to 11:15 AM - Peak 1 of 1										
Peak Hour for Entire Intersection Begins at 10:30 AM										
10:30 AM	12	38	50	32	12	44	27	24	51	145
10:45 AM	**17**	42	59	**44**	10	54	34	36	70	183
11:00 AM	17	**60**	**77**	32	**20**	52	33	40	73	**202**
11:15 AM	10	43	53	39	19	**58**	**37**	**50**	**87**	198
Total Volume	56	183	239	147	61	208	131	150	281	728
% App. Total	23.4	76.6		70.7	29.3		46.6	53.4		
PHF	.824	.763	.776	.835	.763	.897	.885	.750	.807	.901

Counts Unlimited, Inc.
25424 Jaclyn Avenue
Moreno Valley, CA 92557
(951) 247-6716

County of San Bernardino
N/S: North Bay Road
E/W: State Route 189
Weather: Sunny

File Name : CSBNB189SUN
Site Code : 00313144
Start Date : 3/25/2007
Page No : 2

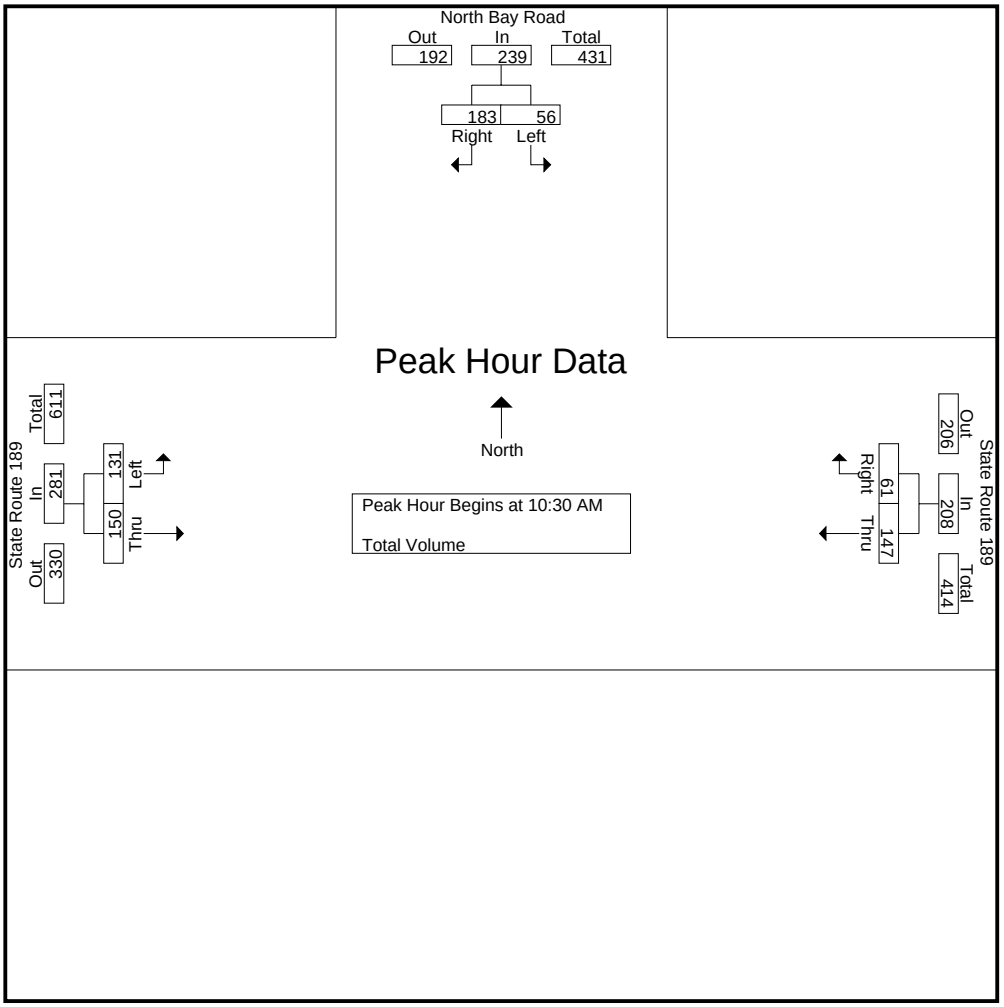

Peak Hour Analysis From 09:30 AM to 11:15 AM - Peak 1 of 1

Peak Hour for Each Approach Begins at:

	10:15 AM			10:30 AM			10:30 AM		
+0 mins.	16	45	61	32	12	44	27	24	51
+15 mins.	12	38	50	**44**	10	54	34	36	70
+30 mins.	**17**	42	59	32	**20**	52	33	40	73
+45 mins.	17	**60**	**77**	39	19	**58**	**37**	**50**	**87**
Total Volume	62	185	247	147	61	208	131	150	281
% App. Total	25.1	74.9		70.7	29.3		46.6	53.4	
PHF	.912	.771	.802	.835	.763	.897	.885	.750	.807

Counts Unlimited, Inc.
25424 Jaclyn Avenue
Moreno Valley, CA 92557
(951) 247-6716

County of San Bernardino
N/S: Lake Gregory Drive
E/W: State Route 189
Weather: Sunny

File Name : CSBLG189SAT
Site Code : 00313191
Start Date : 3/24/2007
Page No : 1

Groups Printed- Total Volume

	Lake Gregory Drive Southbound			State Route 189 Westbound			Lake Gregory Drive Northbound			
Start Time	Left	Thru	App. Total	Left	Right	App. Total	Thru	Right	App. Total	Int. Total
10:30 AM	11	51	62	19	11	30	37	6	43	135
10:45 AM	17	56	73	11	8	19	40	12	52	144
Total	28	107	135	30	19	49	77	18	95	279
11:00 AM	13	37	50	17	10	27	29	10	39	116
11:15 AM	15	53	68	23	17	40	35	15	50	158
11:30 AM	19	57	76	14	16	30	34	14	48	154
11:45 AM	19	54	73	15	22	37	43	12	55	165
Total	66	201	267	69	65	134	141	51	192	593
12:00 PM	20	82	102	10	14	24	52	11	63	189
12:15 PM	12	52	64	24	19	43	28	14	42	149
Grand Total	126	442	568	133	117	250	298	94	392	1210
Apprch %	22.2	77.8		53.2	46.8		76	24		
Total %	10.4	36.5	46.9	11	9.7	20.7	24.6	7.8	32.4	

	Lake Gregory Drive Southbound			State Route 189 Westbound			Lake Gregory Drive Northbound			
Start Time	Left	Thru	App. Total	Left	Right	App. Total	Thru	Right	App. Total	Int. Total
Peak Hour Analysis From 10:30 AM to 12:15 PM - Peak 1 of 1										
Peak Hour for Entire Intersection Begins at 11:15 AM										
11:15 AM	15	53	68	**23**	17	**40**	35	**15**	50	158
11:30 AM	19	57	76	14	16	30	34	14	48	154
11:45 AM	19	54	73	15	**22**	37	43	12	55	165
12:00 PM	**20**	**82**	**102**	10	14	24	**52**	11	**63**	**189**
Total Volume	73	246	319	62	69	131	164	52	216	666
% App. Total	22.9	77.1		47.3	52.7		75.9	24.1		
PHF	.913	.750	.782	.674	.784	.819	.788	.867	.857	.881

Counts Unlimited, Inc.
25424 Jaclyn Avenue
Moreno Valley, CA 92557
(951) 247-6716

County of San Bernardino
N/S: Lake Gregory Drive
E/W: State Route 189
Weather: Sunny

File Name : CSBLG189SAT
Site Code : 00313191
Start Date : 3/24/2007
Page No : 2

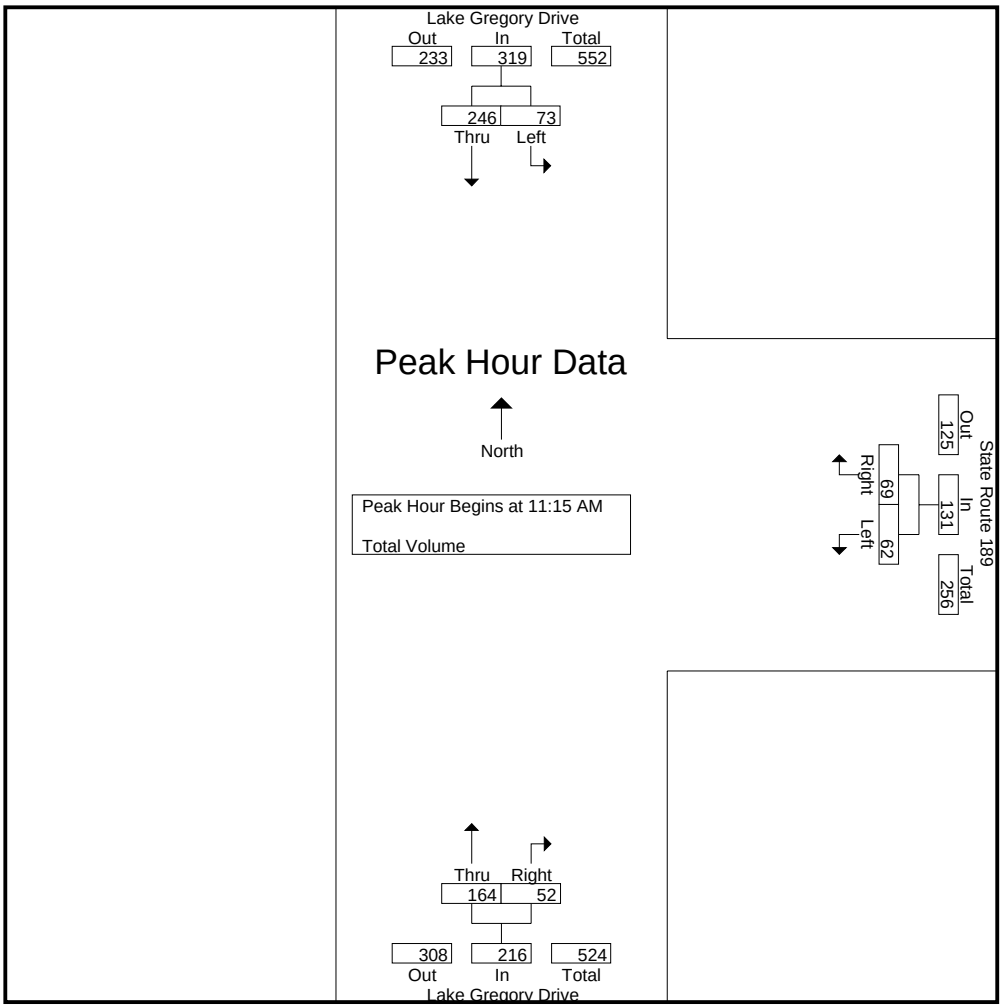

Peak Hour Analysis From 10:30 AM to 12:15 PM - Peak 1 of 1
Peak Hour for Each Approach Begins at:

	11:15 AM			11:00 AM			11:15 AM		
+0 mins.	15	53	68	17	10	27	35	**15**	50
+15 mins.	19	57	76	**23**	17	**40**	34	14	48
+30 mins.	19	54	73	14	16	30	43	12	55
+45 mins.	**20**	**82**	**102**	15	**22**	37	**52**	11	**63**
Total Volume	73	246	319	69	65	134	164	52	216
% App. Total	22.9	77.1		51.5	48.5		75.9	24.1	
PHF	.913	.750	.782	.750	.739	.838	.788	.867	.857

Counts Unlimited, Inc.
25424 Jaclyn Avenue
Moreno Valley, CA 92557
(951) 247-6716

County of San Bernardino
N/S: Lake Gregory Drive
E/W: State Route 189
Weather: Sunny

File Name : CSBLG189SUN
Site Code : 00313160
Start Date : 3/25/2007
Page No : 1

Groups Printed- Total Volume

	Lake Gregory Drive Southbound			State Route 189 Westbound			Lake Gregory Drive Northbound			
Start Time	Left	Thru	App. Total	Left	Right	App. Total	Thru	Right	App. Total	Int. Total
09:30 AM	10	31	41	14	8	22	12	7	19	82
09:45 AM	12	25	37	17	12	29	17	7	24	90
Total	22	56	78	31	20	51	29	14	43	172
10:00 AM	16	23	39	23	13	36	21	3	24	99
10:15 AM	11	25	36	30	10	40	12	6	18	94
10:30 AM	18	24	42	25	12	37	20	6	26	105
10:45 AM	17	41	58	14	14	28	24	4	28	114
Total	62	113	175	92	49	141	77	19	96	412
11:00 AM	11	23	34	34	13	47	21	10	31	112
11:15 AM	5	21	26	46	18	64	27	11	38	128
Grand Total	100	213	313	203	100	303	154	54	208	824
Apprch %	31.9	68.1		67	33		74	26		
Total %	12.1	25.8	38	24.6	12.1	36.8	18.7	6.6	25.2	

	Lake Gregory Drive Southbound			State Route 189 Westbound			Lake Gregory Drive Northbound			
Start Time	Left	Thru	App. Total	Left	Right	App. Total	Thru	Right	App. Total	Int. Total
Peak Hour Analysis From 09:30 AM to 11:15 AM - Peak 1 of 1										
Peak Hour for Entire Intersection Begins at 10:30 AM										
10:30 AM	**18**	24	42	25	12	37	20	6	26	105
10:45 AM	17	**41**	**58**	14	14	28	24	4	28	114
11:00 AM	11	23	34	34	13	47	21	10	31	112
11:15 AM	5	21	26	**46**	**18**	**64**	**27**	**11**	**38**	**128**
Total Volume	51	109	160	119	57	176	92	31	123	459
% App. Total	31.9	68.1		67.6	32.4		74.8	25.2		
PHF	.708	.665	.690	.647	.792	.688	.852	.705	.809	.896

Counts Unlimited, Inc.
25424 Jaclyn Avenue
Moreno Valley, CA 92557
(951) 247-6716

County of San Bernardino
N/S: Lake Gregory Drive
E/W: State Route 189
Weather: Sunny

File Name : CSBLG189SUN
Site Code : 00313160
Start Date : 3/25/2007
Page No : 2

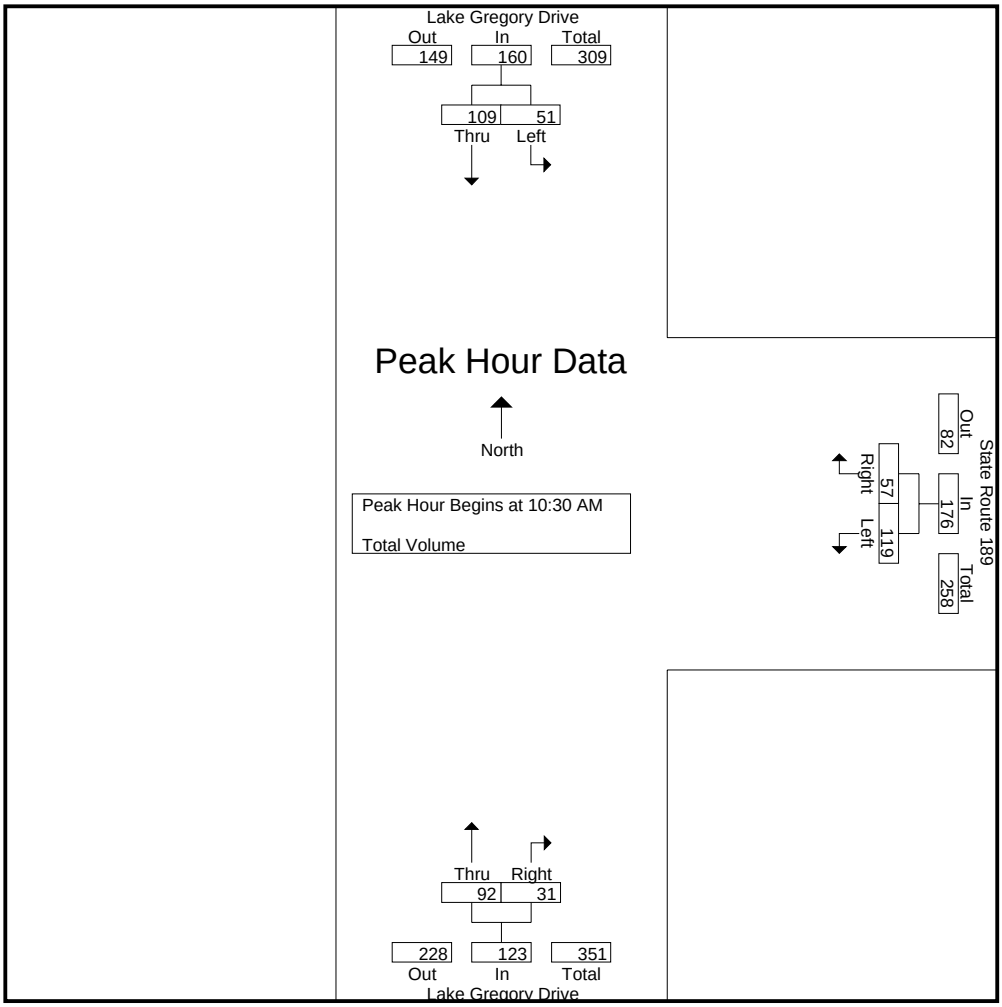

Peak Hour Analysis From 09:30 AM to 11:15 AM - Peak 1 of 1

Peak Hour for Each Approach Begins at:

	10:00 AM			10:30 AM			10:30 AM		
+0 mins.	16	23	39	25	12	37	20	6	26
+15 mins.	11	25	36	14	14	28	24	4	28
+30 mins.	**18**	24	42	34	13	47	21	10	31
+45 mins.	17	**41**	**58**	**46**	**18**	**64**	**27**	**11**	**38**
Total Volume	62	113	175	119	57	176	92	31	123
% App. Total	35.4	64.6		67.6	32.4		74.8	25.2	
PHF	.861	.689	.754	.647	.792	.688	.852	.705	.809

Counts Unlimited, Inc.
25424 Jaclyn Avenue
Moreno Valley, CA 92557
(951) 247-6716

County of San Bernardino
N/S: Lake Gregory Drive
E/W: State Route 18
Weather: Sunny

File Name : CSBLG18SAT
Site Code : 00313182
Start Date : 3/24/2007
Page No : 1

Groups Printed- Passenger Vehicles - Large 2 Axle Vehicles - 3 Axle Vehicles - 4+ Axle Trucks

	Lake Gregory Drive Southbound			State Route 18 Westbound			State Route 18 Eastbound			
Start Time	Left	Right	App. Total	Thru	Right	App. Total	Left	Thru	App. Total	Int. Total
10:30 AM	34	17	51	57	31	88	9	56	65	204
10:45 AM	40	14	54	68	24	92	20	49	69	215
Total	74	31	105	125	55	180	29	105	134	419
11:00 AM	32	25	57	48	25	73	9	62	71	201
11:15 AM	42	25	67	55	23	78	19	72	91	236
11:30 AM	44	21	65	58	30	88	15	63	78	231
11:45 AM	41	27	68	72	36	108	28	74	102	278
Total	159	98	257	233	114	347	71	271	342	946
12:00 PM	53	12	65	58	37	95	22	53	75	235
12:15 PM	45	9	54	53	30	83	16	58	74	211
Grand Total	331	150	481	469	236	705	138	487	625	1811
Apprch %	68.8	31.2		66.5	33.5		22.1	77.9		
Total %	18.3	8.3	26.6	25.9	13	38.9	7.6	26.9	34.5	
Passenger Vehicles	324	147	471	461	225	686	136	482	618	1775
% Passenger Vehicles	97.9	98	97.9	98.3	95.3	97.3	98.6	99	98.9	98
Large 2 Axle Vehicles	5	2	7	6	7	13	1	2	3	23
% Large 2 Axle Vehicles	1.5	1.3	1.5	1.3	3	1.8	0.7	0.4	0.5	1.3
3 Axle Vehicles	1	0	1	1	4	5	0	1	1	7
% 3 Axle Vehicles	0.3	0	0.2	0.2	1.7	0.7	0	0.2	0.2	0.4
4+ Axle Trucks	1	1	2	1	0	1	1	2	3	6
% 4+ Axle Trucks	0.3	0.7	0.4	0.2	0	0.1	0.7	0.4	0.5	0.3

	Lake Gregory Drive Southbound			State Route 18 Westbound			State Route 18 Eastbound			
Start Time	Left	Right	App. Total	Thru	Right	App. Total	Left	Thru	App. Total	Int. Total
Peak Hour Analysis From 10:30 AM to 12:15 PM - Peak 1 of 1										
Peak Hour for Entire Intersection Begins at 11:15 AM										
11:15 AM	42	25	67	55	23	78	19	72	91	236
11:30 AM	44	21	65	58	30	88	15	63	78	231
11:45 AM	41	**27**	**68**	**72**	36	**108**	**28**	**74**	**102**	**278**
12:00 PM	**53**	12	65	58	**37**	95	22	53	75	235
Total Volume	180	85	265	243	126	369	84	262	346	980
% App. Total	67.9	32.1		65.9	34.1		24.3	75.7		
PHF	.849	.787	.974	.844	.851	.854	.750	.885	.848	.881

Counts Unlimited, Inc.
25424 Jaclyn Avenue
Moreno Valley, CA 92557
(951) 247-6716

County of San Bernardino
N/S: Lake Gregory Drive
E/W: State Route 18
Weather: Sunny

File Name : CSBLG18SAT
Site Code : 00313182
Start Date : 3/24/2007
Page No : 2

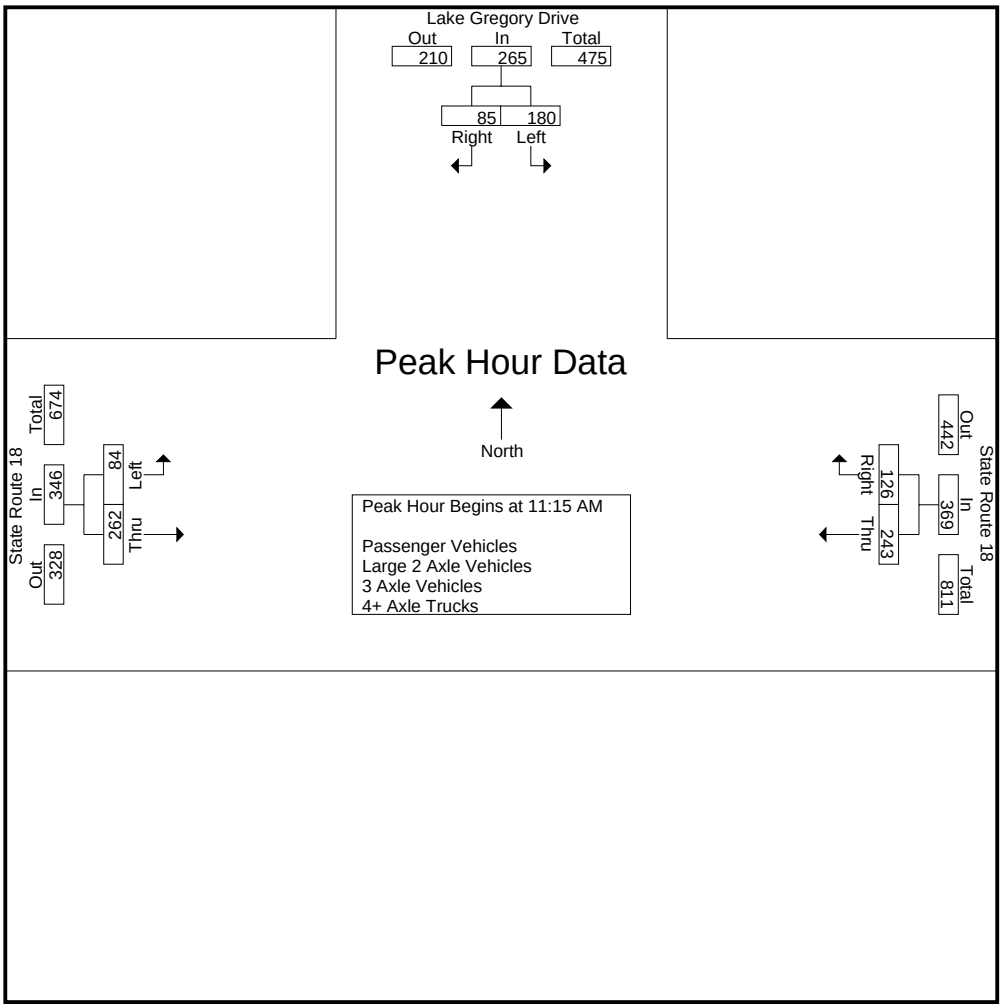

Peak Hour Analysis From 10:30 AM to 12:15 PM - Peak 1 of 1
Peak Hour for Each Approach Begins at:

	11:15 AM			11:30 AM			11:15 AM		
+0 mins.	42	25	67	58	30	88	19	72	91
+15 mins.	44	21	65	**72**	36	**108**	15	63	78
+30 mins.	41	**27**	**68**	58	**37**	95	**28**	**74**	**102**
+45 mins.	**53**	12	65	53	30	83	22	53	75
Total Volume	180	85	265	241	133	374	84	262	346
% App. Total	67.9	32.1		64.4	35.6		24.3	75.7	
PHF	.849	.787	.974	.837	.899	.866	.750	.885	.848

Counts Unlimited, Inc.
25424 Jaclyn Avenue
Moreno Valley, CA 92557
(951) 247-6716

County of San Bernardino
N/S: Lake Gregory Drive
E/W: State Route 18
Weather: Sunny

File Name : CSBLG18SAT
Site Code : 00313182
Start Date : 3/24/2007
Page No : 1

Groups Printed- Passenger Vehicles

	Lake Gregory Drive Southbound			State Route 18 Westbound			State Route 18 Eastbound			
Start Time	Left	Right	App. Total	Thru	Right	App. Total	Left	Thru	App. Total	Int. Total
10:30 AM	33	16	49	56	30	86	9	54	63	198
10:45 AM	38	13	51	66	23	89	19	49	68	208
Total	71	29	100	122	53	175	28	103	131	406
11:00 AM	31	25	56	47	23	70	9	61	70	196
11:15 AM	41	24	65	55	22	77	18	72	90	232
11:30 AM	43	21	64	57	28	85	15	63	78	227
11:45 AM	41	27	68	70	35	105	28	74	102	275
Total	156	97	253	229	108	337	70	270	340	930
12:00 PM	52	12	64	58	35	93	22	52	74	231
12:15 PM	45	9	54	52	29	81	16	57	73	208
Grand Total	324	147	471	461	225	686	136	482	618	1775
Apprch %	68.8	31.2		67.2	32.8		22	78		
Total %	18.3	8.3	26.5	26	12.7	38.6	7.7	27.2	34.8	

	Lake Gregory Drive Southbound			State Route 18 Westbound			State Route 18 Eastbound			
Start Time	Left	Right	App. Total	Thru	Right	App. Total	Left	Thru	App. Total	Int. Total
Peak Hour Analysis From 11:15 AM to 12:00 PM - Peak 1 of 1										
Peak Hour for Entire Intersection Begins at 11:15 AM										
11:15 AM	41	24	65	55	22	77	18	72	90	232
11:30 AM	43	21	64	57	28	85	15	63	78	227
11:45 AM	41	**27**	**68**	**70**	**35**	**105**	**28**	**74**	**102**	**275**
12:00 PM	**52**	12	64	58	35	93	22	52	74	231
Total Volume	177	84	261	240	120	360	83	261	344	965
% App. Total	67.8	32.2		66.7	33.3		24.1	75.9		
PHF	.851	.778	.960	.857	.857	.857	.741	.882	.843	.877

Counts Unlimited, Inc.
25424 Jaclyn Avenue
Moreno Valley, CA 92557
(951) 247-6716

County of San Bernardino
N/S: Lake Gregory Drive
E/W: State Route 18
Weather: Sunny

File Name : CSBLG18SAT
Site Code : 00313182
Start Date : 3/24/2007
Page No : 2

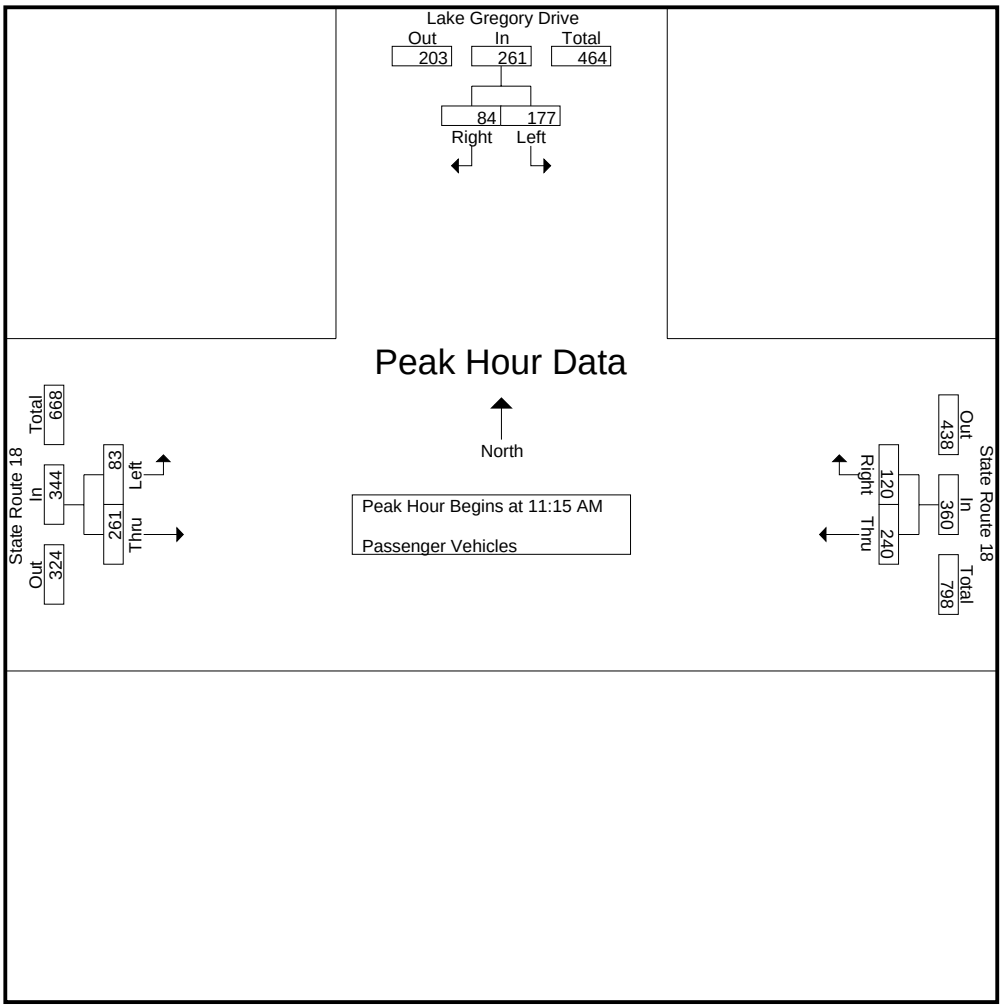

Peak Hour Analysis From 11:15 AM to 12:00 PM - Peak 1 of 1
Peak Hour for Each Approach Begins at:

	11:15 AM			11:15 AM			11:15 AM		
+0 mins.	41	24	65	55	22	77	18	72	90
+15 mins.	43	21	64	57	28	85	15	63	78
+30 mins.	41	**27**	**68**	**70**	**35**	**105**	**28**	**74**	**102**
+45 mins.	**52**	12	64	58	35	93	22	52	74
Total Volume	177	84	261	240	120	360	83	261	344
% App. Total	67.8	32.2		66.7	33.3		24.1	75.9	
PHF	.851	.778	.960	.857	.857	.857	.741	.882	.843

Counts Unlimited, Inc.
25424 Jaclyn Avenue
Moreno Valley, CA 92557
(951) 247-6716

County of San Bernardino
N/S: Lake Gregory Drive
E/W: State Route 18
Weather: Sunny

File Name : CSBLG18SAT
Site Code : 00313182
Start Date : 3/24/2007
Page No : 1

Groups Printed- Large 2 Axle Vehicles

	Lake Gregory Drive Southbound			State Route 18 Westbound			State Route 18 Eastbound			
Start Time	Left	Right	App. Total	Thru	Right	App. Total	Left	Thru	App. Total	Int. Total
10:30 AM	0	0	0	1	1	2	0	1	1	3
10:45 AM	1	1	2	2	1	3	0	0	0	5
Total	1	1	2	3	2	5	0	1	1	8
11:00 AM	1	0	1	0	1	1	0	0	0	2
11:15 AM	1	1	2	0	0	0	1	0	1	3
11:30 AM	1	0	1	1	1	2	0	0	0	3
11:45 AM	0	0	0	1	1	2	0	0	0	2
Total	3	1	4	2	3	5	1	0	1	10
12:00 PM	1	0	1	0	2	2	0	0	0	3
12:15 PM	0	0	0	1	0	1	0	1	1	2
Grand Total	5	2	7	6	7	13	1	2	3	23
Apprch %	71.4	28.6		46.2	53.8		33.3	66.7		
Total %	21.7	8.7	30.4	26.1	30.4	56.5	4.3	8.7	13	

	Lake Gregory Drive Southbound			State Route 18 Westbound			State Route 18 Eastbound			
Start Time	Left	Right	App. Total	Thru	Right	App. Total	Left	Thru	App. Total	Int. Total
Peak Hour Analysis From 11:15 AM to 12:00 PM - Peak 1 of 1										
Peak Hour for Entire Intersection Begins at 11:15 AM										
11:15 AM	**1**	**1**	**2**	0	0	0	**1**	0	**1**	**3**
11:30 AM	1	0	1	**1**	1	**2**	0	0	0	3
11:45 AM	0	0	0	1	1	2	0	0	0	2
12:00 PM	1	0	1	0	**2**	2	0	0	0	3
Total Volume	3	1	4	2	4	6	1	0	1	11
% App. Total	75	25		33.3	66.7		100	0		
PHF	.750	.250	.500	.500	.500	.750	.250	.000	.250	.917

Counts Unlimited, Inc.
25424 Jaclyn Avenue
Moreno Valley, CA 92557
(951) 247-6716

County of San Bernardino
N/S: Lake Gregory Drive
E/W: State Route 18
Weather: Sunny

File Name : CSBLG18SAT
Site Code : 00313182
Start Date : 3/24/2007
Page No : 2

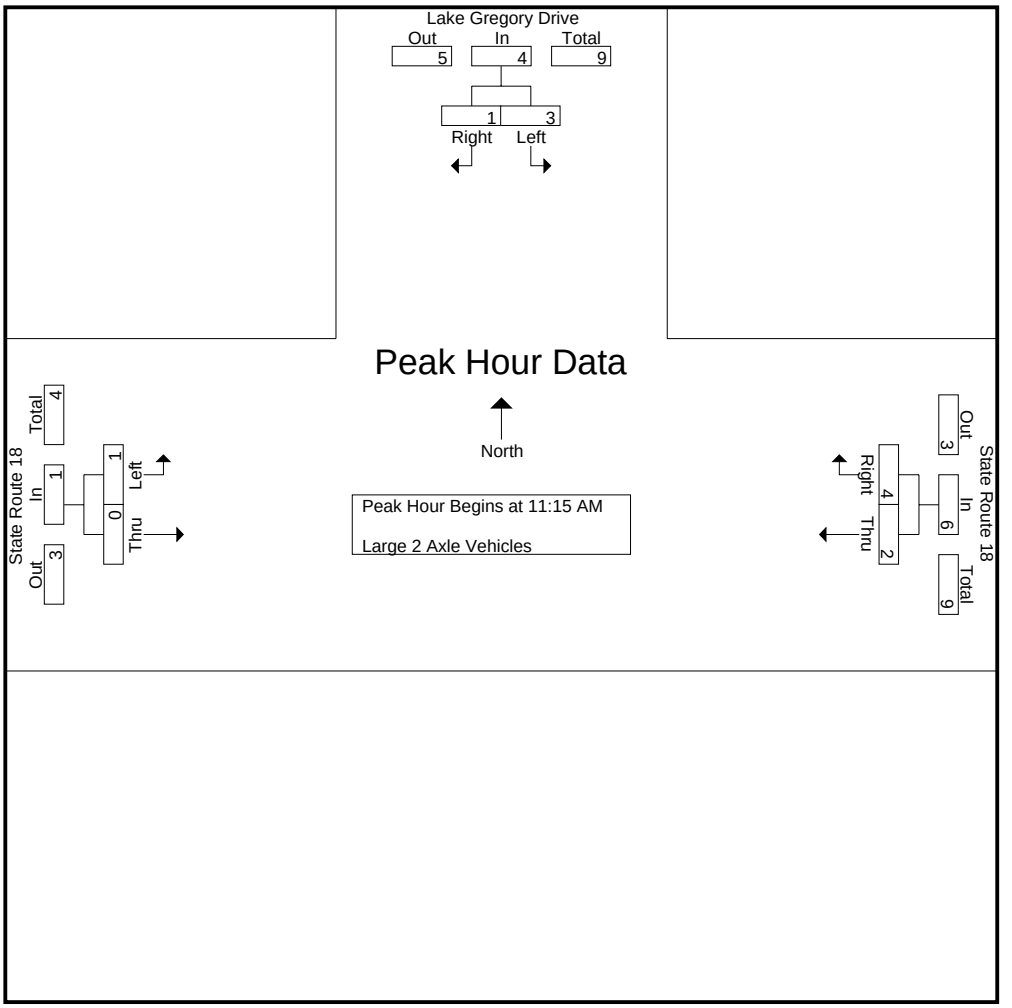

Peak Hour Analysis From 11:15 AM to 12:00 PM - Peak 1 of 1
Peak Hour for Each Approach Begins at:

	11:15 AM			11:15 AM			11:15 AM		
+0 mins.	**1**	**1**	**2**	0	0	0	**1**	0	**1**
+15 mins.	1	0	1	**1**	1	**2**	0	0	0
+30 mins.	0	0	0	1	1	2	0	0	0
+45 mins.	1	0	1	0	**2**	2	0	0	0
Total Volume	3	1	4	2	4	6	1	0	1
% App. Total	75	25		33.3	66.7		100	0	
PHF	.750	.250	.500	.500	.500	.750	.250	.000	.250

Counts Unlimited, Inc.
25424 Jaclyn Avenue
Moreno Valley, CA 92557
(951) 247-6716

County of San Bernardino
N/S: Lake Gregory Drive
E/W: State Route 18
Weather: Sunny

File Name : CSBLG18SAT
Site Code : 00313182
Start Date : 3/24/2007
Page No : 1

Groups Printed- 3 Axle Vehicles

	Lake Gregory Drive Southbound			State Route 18 Westbound			State Route 18 Eastbound			
Start Time	Left	Right	App. Total	Thru	Right	App. Total	Left	Thru	App. Total	Int. Total
10:30 AM	0	0	0	0	0	0	0	0	0	0
10:45 AM	1	0	1	0	0	0	0	0	0	1
Total	1	0	1	0	0	0	0	0	0	1
11:00 AM	0	0	0	0	1	1	0	0	0	1
11:15 AM	0	0	0	0	1	1	0	0	0	1
11:30 AM	0	0	0	0	1	1	0	0	0	1
11:45 AM	0	0	0	1	0	1	0	0	0	1
Total	0	0	0	1	3	4	0	0	0	4
12:00 PM	0	0	0	0	0	0	0	1	1	1
12:15 PM	0	0	0	0	1	1	0	0	0	1
Grand Total	1	0	1	1	4	5	0	1	1	7
Apprch %	100	0		20	80		0	100		
Total %	14.3	0	14.3	14.3	57.1	71.4	0	14.3	14.3	

	Lake Gregory Drive Southbound			State Route 18 Westbound			State Route 18 Eastbound			
Start Time	Left	Right	App. Total	Thru	Right	App. Total	Left	Thru	App. Total	Int. Total
Peak Hour Analysis From 11:15 AM to 12:00 PM - Peak 1 of 1										
Peak Hour for Entire Intersection Begins at 11:15 AM										
11:15 AM	0	0	0	0	**1**	**1**	0	0	0	**1**
11:30 AM	0	0	0	0	1	1	0	0	0	1
11:45 AM	0	0	0	**1**	0	1	0	0	0	1
12:00 PM	0	0	0	0	0	0	0	**1**	**1**	1
Total Volume	0	0	0	1	2	3	0	1	1	4
% App. Total	0	0		33.3	66.7		0	100		
PHF	.000	.000	.000	.250	.500	.750	.000	.250	.250	1.000

Counts Unlimited, Inc.
25424 Jaclyn Avenue
Moreno Valley, CA 92557
(951) 247-6716

County of San Bernardino
N/S: Lake Gregory Drive
E/W: State Route 18
Weather: Sunny

File Name : CSBLG18SAT
Site Code : 00313182
Start Date : 3/24/2007
Page No : 2

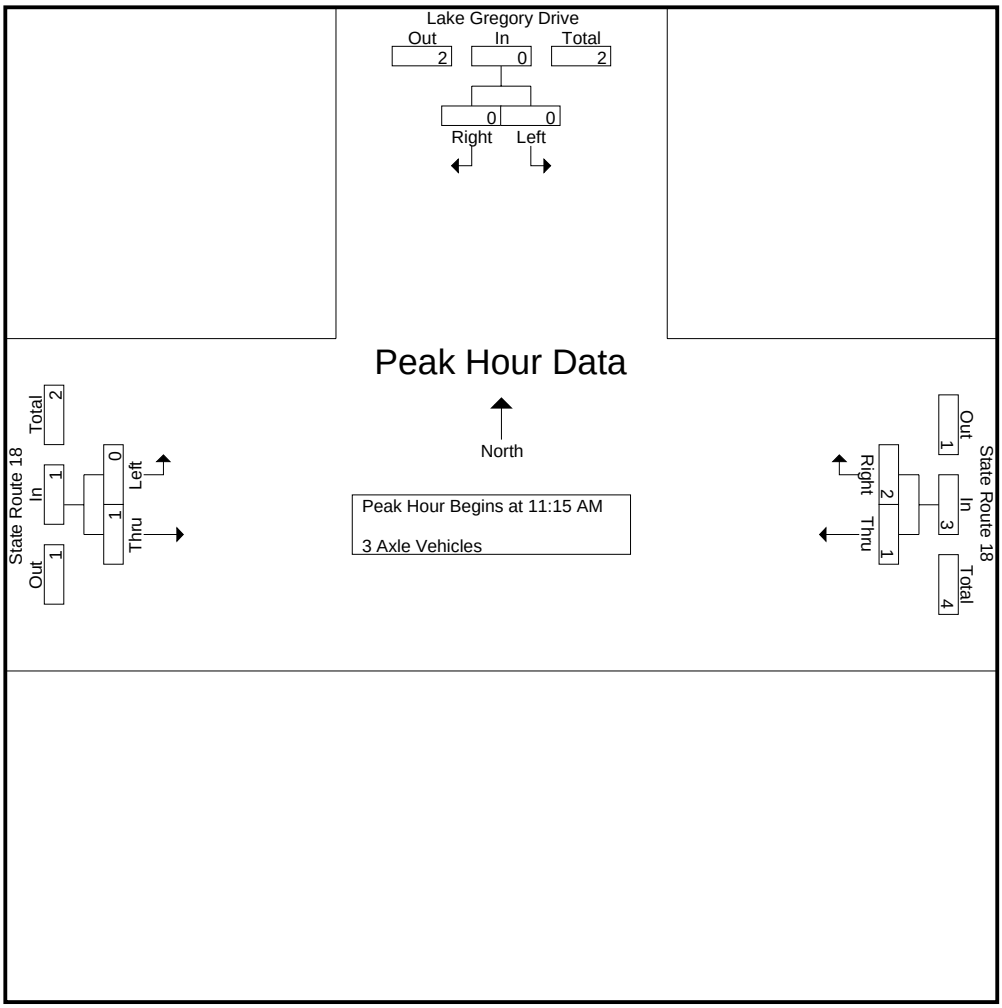

Peak Hour Analysis From 11:15 AM to 12:00 PM - Peak 1 of 1
Peak Hour for Each Approach Begins at:

	11:15 AM			11:15 AM			11:15 AM		
+0 mins.	0	0	0	0	**1**	**1**	0	0	0
+15 mins.	0	0	0	0	1	1	0	0	0
+30 mins.	0	0	0	**1**	0	1	0	0	0
+45 mins.	0	0	0	0	0	0	0	**1**	**1**
Total Volume	0	0	0	1	2	3	0	1	1
% App. Total	0	0		33.3	66.7		0	100	
PHF	.000	.000	.000	.250	.500	.750	.000	.250	.250

Counts Unlimited, Inc.
25424 Jaclyn Avenue
Moreno Valley, CA 92557
(951) 247-6716

County of San Bernardino
N/S: Lake Gregory Drive
E/W: State Route 18
Weather: Sunny

File Name : CSBLG18SAT
Site Code : 00313182
Start Date : 3/24/2007
Page No : 1

Groups Printed- 4+ Axle Trucks

	Lake Gregory Drive Southbound			State Route 18 Westbound			State Route 18 Eastbound			
Start Time	Left	Right	App. Total	Thru	Right	App. Total	Left	Thru	App. Total	Int. Total
10:30 AM	1	1	2	0	0	0	0	1	1	3
10:45 AM	0	0	0	0	0	0	1	0	1	1
Total	1	1	2	0	0	0	1	1	2	4
11:00 AM	0	0	0	1	0	1	0	1	1	2
11:15 AM	0	0	0	0	0	0	0	0	0	0
11:30 AM	0	0	0	0	0	0	0	0	0	0
11:45 AM	0	0	0	0	0	0	0	0	0	0
Total	0	0	0	1	0	1	0	1	1	2
12:00 PM	0	0	0	0	0	0	0	0	0	0
12:15 PM	0	0	0	0	0	0	0	0	0	0
Grand Total	1	1	2	1	0	1	1	2	3	6
Apprch %	50	50		100	0		33.3	66.7		
Total %	16.7	16.7	33.3	16.7	0	16.7	16.7	33.3	50	

	Lake Gregory Drive Southbound			State Route 18 Westbound			State Route 18 Eastbound			
Start Time	Left	Right	App. Total	Thru	Right	App. Total	Left	Thru	App. Total	Int. Total
Peak Hour Analysis From 11:15 AM to 12:00 PM - Peak 1 of 1										
Peak Hour for Entire Intersection Begins at 11:15 AM										
11:15 AM	0	0	0	0	0	0	0	0	0	0
11:30 AM	0	0	0	0	0	0	0	0	0	0
11:45 AM	0	0	0	0	0	0	0	0	0	0
12:00 PM	0	0	0	0	0	0	0	0	0	0
Total Volume	0	0	0	0	0	0	0	0	0	0
% App. Total	0	0		0	0		0	0		
PHF	.000	.000	.000	.000	.000	.000	.000	.000	.000	.000

Counts Unlimited, Inc.
25424 Jaclyn Avenue
Moreno Valley, CA 92557
(951) 247-6716

County of San Bernardino
N/S: Lake Gregory Drive
E/W: State Route 18
Weather: Sunny

File Name : CSBLG18SAT
Site Code : 00313182
Start Date : 3/24/2007
Page No : 2

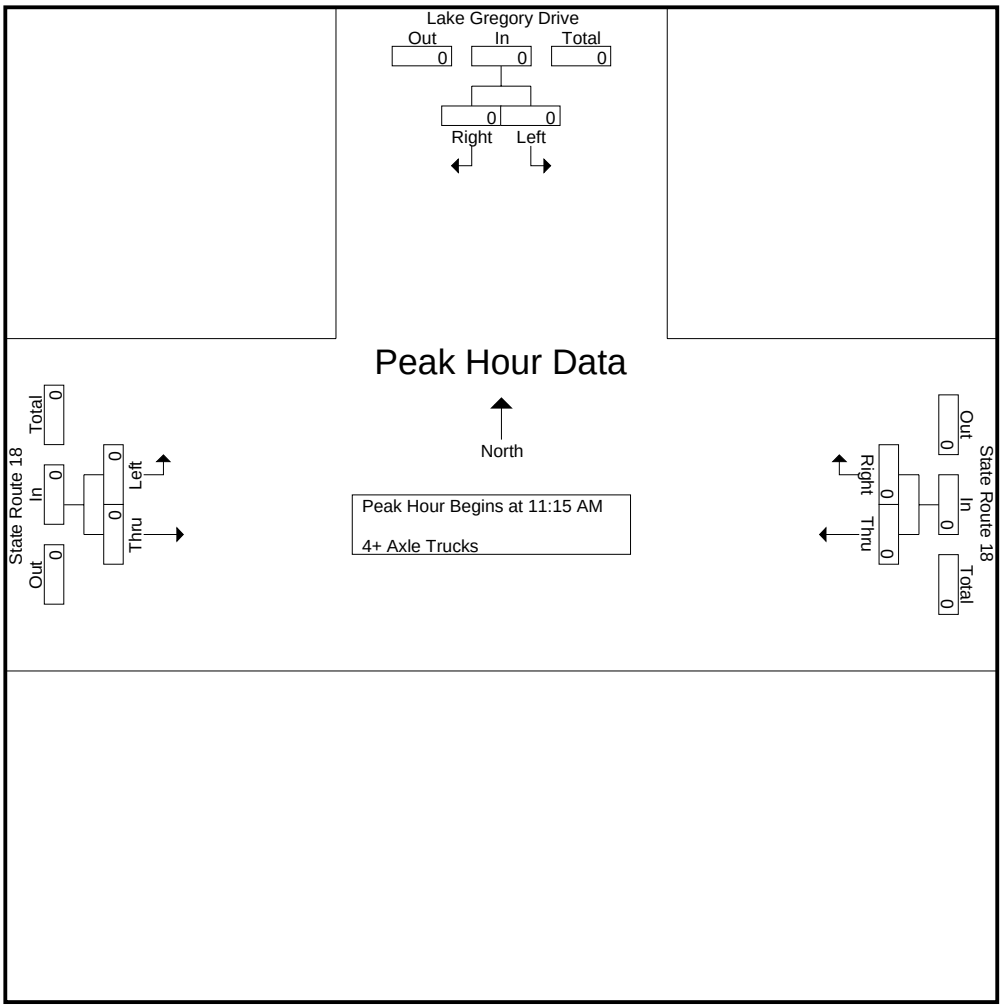

Peak Hour Analysis From 11:15 AM to 12:00 PM - Peak 1 of 1
Peak Hour for Each Approach Begins at:

	11:15 AM			11:15 AM			11:15 AM		
+0 mins.	0	0	0	0	0	0	0	0	0
+15 mins.	0	0	0	0	0	0	0	0	0
+30 mins.	0	0	0	0	0	0	0	0	0
+45 mins.	0	0	0	0	0	0	0	0	0
Total Volume	0	0	0	0	0	0	0	0	0
% App. Total	0	0		0	0		0	0	
PHF	.000	.000	.000	.000	.000	.000	.000	.000	.000

Counts Unlimited, Inc.
25424 Jaclyn Avenue
Moreno Valley, CA 92557
(951) 247-6716

County of San Bernardino
N/S: Lake Gregory Drive
E/W: State Route 18
Weather: Sunny

File Name : CSBLG18SUN
Site Code : 00313182
Start Date : 3/25/2007
Page No : 1

Groups Printed- Passenger Vehicles - Large 2 Axle Vehicles - 3 Axle Vehicles - 4+ Axle Trucks

	Lake Gregory Drive Southbound			State Route 18 Westbound			State Route 18 Eastbound			
Start Time	Left	Right	App. Total	Thru	Right	App. Total	Left	Thru	App. Total	Int. Total
09:30 AM	14	11	25	29	8	37	3	25	28	90
09:45 AM	14	13	27	64	11	75	6	34	40	142
Total	28	24	52	93	19	112	9	59	68	232
10:00 AM	18	21	39	89	18	107	7	32	39	185
10:15 AM	17	28	45	76	19	95	4	32	36	176
10:30 AM	30	22	52	82	25	107	7	44	51	210
10:45 AM	37	23	60	48	19	67	12	50	62	189
Total	102	94	196	295	81	376	30	158	188	760
11:00 AM	24	38	62	101	16	117	14	46	60	239
11:15 AM	24	44	68	98	26	124	13	43	56	248
Grand Total	178	200	378	587	142	729	66	306	372	1479
Apprch %	47.1	52.9		80.5	19.5		17.7	82.3		
Total %	12	13.5	25.6	39.7	9.6	49.3	4.5	20.7	25.2	
Passenger Vehicles	175	197	372	575	139	714	65	300	365	1451
% Passenger Vehicles	98.3	98.5	98.4	98	97.9	97.9	98.5	98	98.1	98.1
Large 2 Axle Vehicles	3	3	6	11	3	14	1	6	7	27
% Large 2 Axle Vehicles	1.7	1.5	1.6	1.9	2.1	1.9	1.5	2	1.9	1.8
3 Axle Vehicles	0	0	0	0	0	0	0	0	0	0
% 3 Axle Vehicles	0	0	0	0	0	0	0	0	0	0
4+ Axle Trucks	0	0	0	1	0	1	0	0	0	1
% 4+ Axle Trucks	0	0	0	0.2	0	0.1	0	0	0	0.1

	Lake Gregory Drive Southbound			State Route 18 Westbound			State Route 18 Eastbound			
Start Time	Left	Right	App. Total	Thru	Right	App. Total	Left	Thru	App. Total	Int. Total
Peak Hour Analysis From 09:30 AM to 11:15 AM - Peak 1 of 1										
Peak Hour for Entire Intersection Begins at 10:30 AM										
10:30 AM	30	22	52	82	25	107	7	44	51	210
10:45 AM	**37**	23	60	48	19	67	12	**50**	**62**	189
11:00 AM	24	38	62	**101**	16	117	**14**	46	60	239
11:15 AM	24	**44**	**68**	98	**26**	**124**	13	43	56	**248**
Total Volume	115	127	242	329	86	415	46	183	229	886
% App. Total	47.5	52.5		79.3	20.7		20.1	79.9		
PHF	.777	.722	.890	.814	.827	.837	.821	.915	.923	.893

Counts Unlimited, Inc.
25424 Jaclyn Avenue
Moreno Valley, CA 92557
(951) 247-6716

County of San Bernardino
N/S: Lake Gregory Drive
E/W: State Route 18
Weather: Sunny

File Name : CSBLG18SUN
Site Code : 00313182
Start Date : 3/25/2007
Page No : 2

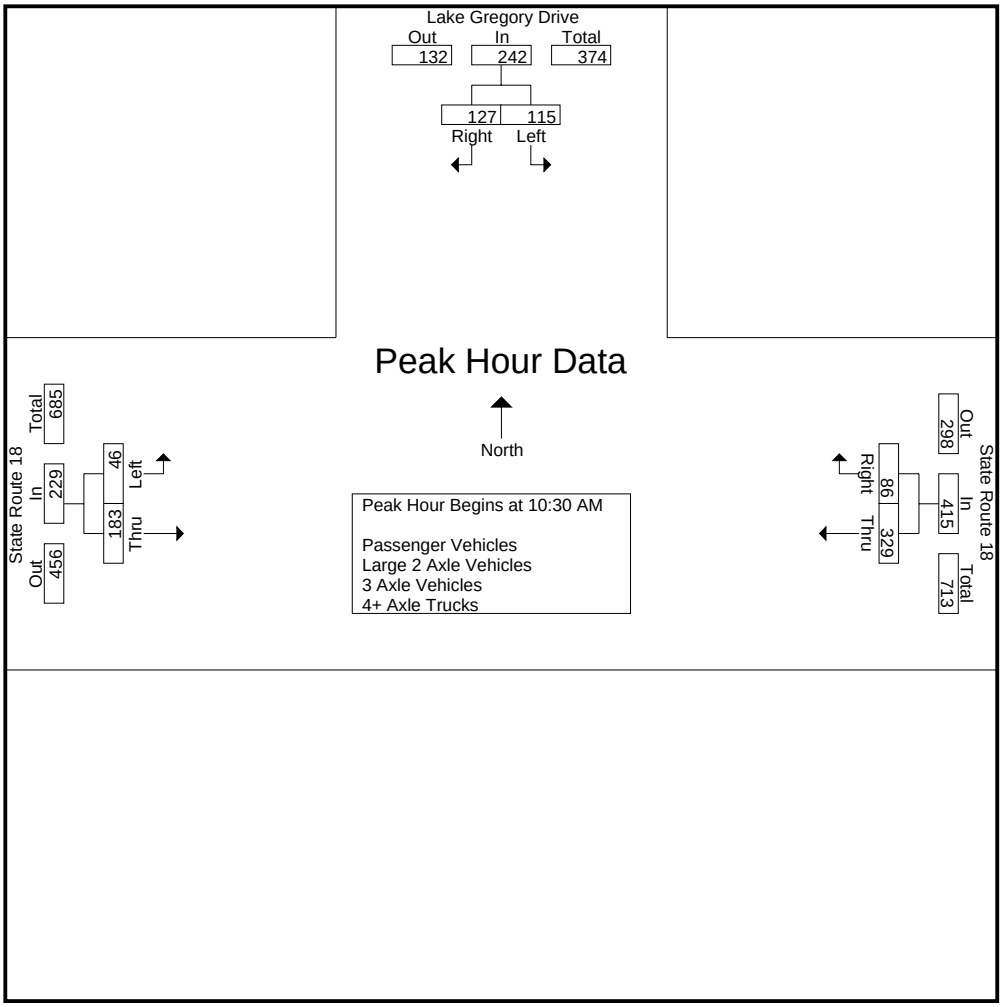

Peak Hour Analysis From 09:30 AM to 11:15 AM - Peak 1 of 1

Peak Hour for Each Approach Begins at:

	10:30 AM			10:30 AM			10:30 AM		
+0 mins.	30	22	52	82	25	107	7	44	51
+15 mins.	**37**	23	60	48	19	67	12	**50**	**62**
+30 mins.	24	38	62	**101**	16	117	**14**	46	60
+45 mins.	24	**44**	**68**	98	**26**	**124**	13	43	56
Total Volume	115	127	242	329	86	415	46	183	229
% App. Total	47.5	52.5		79.3	20.7		20.1	79.9	
PHF	.777	.722	.890	.814	.827	.837	.821	.915	.923

Counts Unlimited, Inc.
25424 Jaclyn Avenue
Moreno Valley, CA 92557
(951) 247-6716

County of San Bernardino
N/S: Lake Gregory Drive
E/W: State Route 18
Weather: Sunny

File Name : CSBLG18SUN
Site Code : 00313182
Start Date : 3/25/2007
Page No : 1

Groups Printed- Passenger Vehicles

	Lake Gregory Drive Southbound			State Route 18 Westbound			State Route 18 Eastbound			
Start Time	Left	Right	App. Total	Thru	Right	App. Total	Left	Thru	App. Total	Int. Total
09:30 AM	14	11	25	29	8	37	3	25	28	90
09:45 AM	12	13	25	64	10	74	6	33	39	138
Total	26	24	50	93	18	111	9	58	67	228
10:00 AM	18	21	39	85	18	103	7	31	38	180
10:15 AM	17	28	45	73	19	92	4	31	35	172
10:30 AM	29	22	51	80	24	104	7	43	50	205
10:45 AM	37	23	60	48	19	67	12	49	61	188
Total	101	94	195	286	80	366	30	154	184	745
11:00 AM	24	36	60	99	15	114	14	46	60	234
11:15 AM	24	43	67	97	26	123	12	42	54	244
Grand Total	175	197	372	575	139	714	65	300	365	1451
Apprch %	47	53		80.5	19.5		17.8	82.2		
Total %	12.1	13.6	25.6	39.6	9.6	49.2	4.5	20.7	25.2	

	Lake Gregory Drive Southbound			State Route 18 Westbound			State Route 18 Eastbound			
Start Time	Left	Right	App. Total	Thru	Right	App. Total	Left	Thru	App. Total	Int. Total
Peak Hour Analysis From 10:30 AM to 11:15 AM - Peak 1 of 1										
Peak Hour for Entire Intersection Begins at 10:30 AM										
10:30 AM	29	22	51	80	24	104	7	43	50	205
10:45 AM	**37**	23	60	48	19	67	12	**49**	**61**	188
11:00 AM	24	36	60	**99**	15	114	**14**	46	60	234
11:15 AM	24	**43**	**67**	97	**26**	**123**	12	42	54	**244**
Total Volume	114	124	238	324	84	408	45	180	225	871
% App. Total	47.9	52.1		79.4	20.6		20	80		
PHF	.770	.721	.888	.818	.808	.829	.804	.918	.922	.892

Counts Unlimited, Inc.
25424 Jaclyn Avenue
Moreno Valley, CA 92557
(951) 247-6716

County of San Bernardino
N/S: Lake Gregory Drive
E/W: State Route 18
Weather: Sunny

File Name : CSBLG18SUN
Site Code : 00313182
Start Date : 3/25/2007
Page No : 2

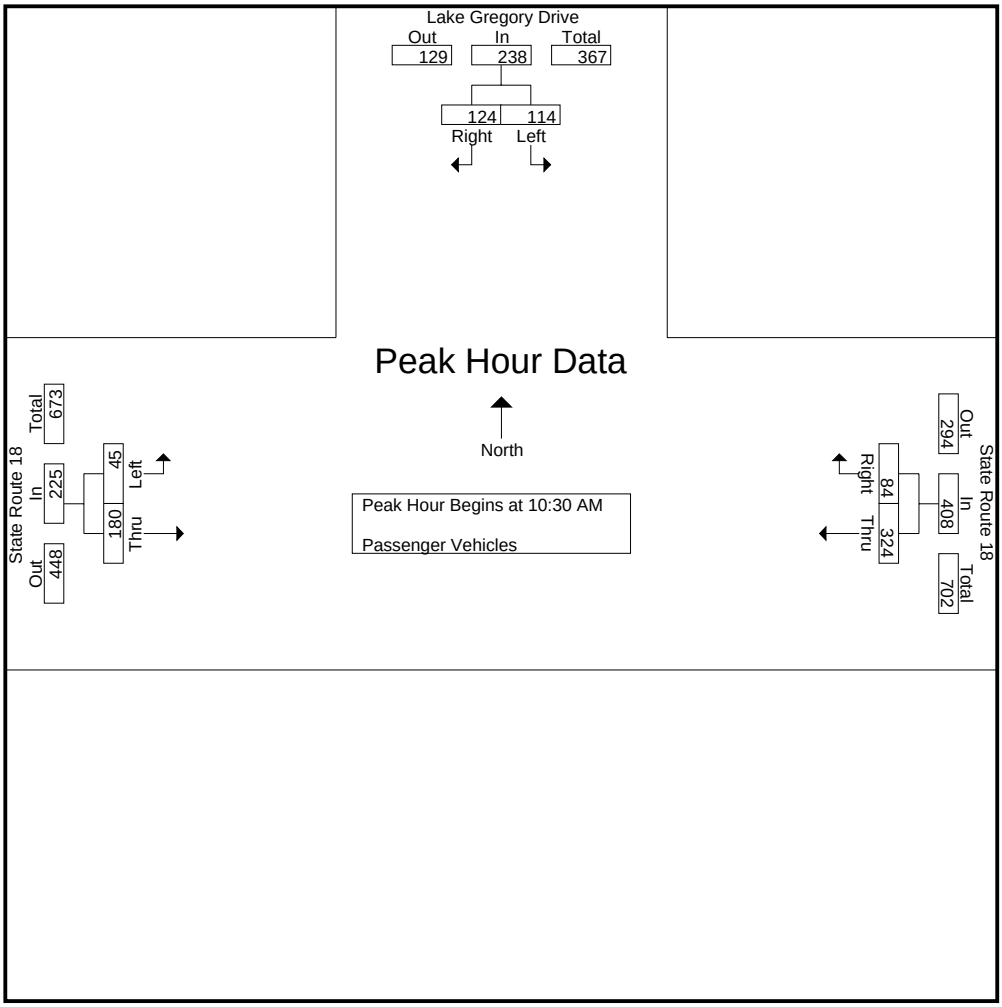

Peak Hour Analysis From 10:30 AM to 11:15 AM - Peak 1 of 1

Peak Hour for Each Approach Begins at:

	10:30 AM			10:30 AM			10:30 AM		
+0 mins.	29	22	51	80	24	104	7	43	50
+15 mins.	**37**	23	60	48	19	67	12	**49**	**61**
+30 mins.	24	36	60	**99**	15	114	**14**	46	60
+45 mins.	24	**43**	**67**	97	**26**	**123**	12	42	54
Total Volume	114	124	238	324	84	408	45	180	225
% App. Total	47.9	52.1		79.4	20.6		20	80	
PHF	.770	.721	.888	.818	.808	.829	.804	.918	.922

Counts Unlimited, Inc.
25424 Jaclyn Avenue
Moreno Valley, CA 92557
(951) 247-6716

County of San Bernardino
N/S: Lake Gregory Drive
E/W: State Route 18
Weather: Sunny

File Name : CSBLG18SUN
Site Code : 00313182
Start Date : 3/25/2007
Page No : 1

Groups Printed- Large 2 Axle Vehicles

	Lake Gregory Drive Southbound			State Route 18 Westbound			State Route 18 Eastbound			
Start Time	Left	Right	App. Total	Thru	Right	App. Total	Left	Thru	App. Total	Int. Total
09:30 AM	0	0	0	0	0	0	0	0	0	0
09:45 AM	2	0	2	0	1	1	0	1	1	4
Total	2	0	2	0	1	1	0	1	1	4
10:00 AM	0	0	0	4	0	4	0	1	1	5
10:15 AM	0	0	0	2	0	2	0	1	1	3
10:30 AM	1	0	1	2	1	3	0	1	1	5
10:45 AM	0	0	0	0	0	0	0	1	1	1
Total	1	0	1	8	1	9	0	4	4	14
11:00 AM	0	2	2	2	1	3	0	0	0	5
11:15 AM	0	1	1	1	0	1	1	1	2	4
Grand Total	3	3	6	11	3	14	1	6	7	27
Apprch %	50	50		78.6	21.4		14.3	85.7		
Total %	11.1	11.1	22.2	40.7	11.1	51.9	3.7	22.2	25.9	

	Lake Gregory Drive Southbound			State Route 18 Westbound			State Route 18 Eastbound			
Start Time	Left	Right	App. Total	Thru	Right	App. Total	Left	Thru	App. Total	Int. Total
Peak Hour Analysis From 10:30 AM to 11:15 AM - Peak 1 of 1										
Peak Hour for Entire Intersection Begins at 10:30 AM										
10:30 AM	**1**	0	1	**2**	**1**	**3**	0	**1**	1	**5**
10:45 AM	0	0	0	0	0	0	0	1	1	1
11:00 AM	0	**2**	**2**	2	1	3	0	0	0	5
11:15 AM	0	1	1	1	0	1	**1**	1	**2**	4
Total Volume	1	3	4	5	2	7	1	3	4	15
% App. Total	25	75		71.4	28.6		25	75		
PHF	.250	.375	.500	.625	.500	.583	.250	.750	.500	.750

Counts Unlimited, Inc.
25424 Jaclyn Avenue
Moreno Valley, CA 92557
(951) 247-6716

County of San Bernardino
N/S: Lake Gregory Drive
E/W: State Route 18
Weather: Sunny

File Name : CSBLG18SUN
Site Code : 00313182
Start Date : 3/25/2007
Page No : 2

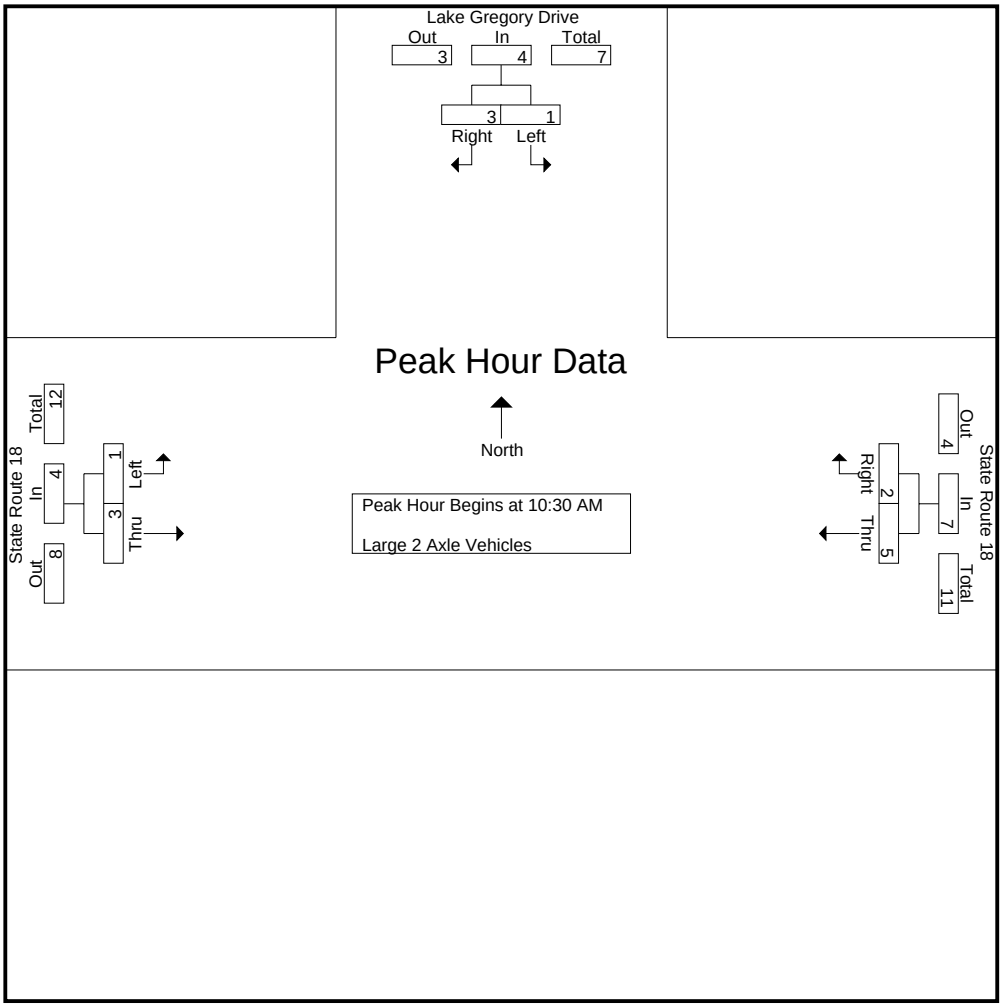

Peak Hour Analysis From 10:30 AM to 11:15 AM - Peak 1 of 1

Peak Hour for Each Approach Begins at:

	10:30 AM			10:30 AM			10:30 AM		
+0 mins.	**1**	0	1	**2**	**1**	**3**	0	**1**	1
+15 mins.	0	0	0	0	0	0	0	1	1
+30 mins.	0	**2**	**2**	2	1	3	0	0	0
+45 mins.	0	1	1	1	0	1	**1**	1	**2**
Total Volume	1	3	4	5	2	7	1	3	4
% App. Total	25	75		71.4	28.6		25	75	
PHF	.250	.375	.500	.625	.500	.583	.250	.750	.500

Counts Unlimited, Inc.
25424 Jaclyn Avenue
Moreno Valley, CA 92557
(951) 247-6716

County of San Bernardino
N/S: Lake Gregory Drive
E/W: State Route 18
Weather: Sunny

File Name : CSBLG18SUN
Site Code : 00313182
Start Date : 3/25/2007
Page No : 1

Groups Printed- 3 Axle Vehicles

	Lake Gregory Drive Southbound			State Route 18 Westbound			State Route 18 Eastbound			
Start Time	Left	Right	App. Total	Thru	Right	App. Total	Left	Thru	App. Total	Int. Total
09:30 AM	0	0	0	0	0	0	0	0	0	0
09:45 AM	0	0	0	0	0	0	0	0	0	0
Total	0	0	0	0	0	0	0	0	0	0
10:00 AM	0	0	0	0	0	0	0	0	0	0
10:15 AM	0	0	0	0	0	0	0	0	0	0
10:30 AM	0	0	0	0	0	0	0	0	0	0
10:45 AM	0	0	0	0	0	0	0	0	0	0
Total	0	0	0	0	0	0	0	0	0	0
11:00 AM	0	0	0	0	0	0	0	0	0	0
11:15 AM	0	0	0	0	0	0	0	0	0	0
Grand Total	0	0	0	0	0	0	0	0	0	0
Apprch %	0	0		0	0		0	0		
Total %										

	Lake Gregory Drive Southbound			State Route 18 Westbound			State Route 18 Eastbound			
Start Time	Left	Right	App. Total	Thru	Right	App. Total	Left	Thru	App. Total	Int. Total
Peak Hour Analysis From 10:30 AM to 11:15 AM - Peak 1 of 1										
Peak Hour for Entire Intersection Begins at 10:30 AM										
10:30 AM	0	0	0	0	0	0	0	0	0	0
10:45 AM	0	0	0	0	0	0	0	0	0	0
11:00 AM	0	0	0	0	0	0	0	0	0	0
11:15 AM	0	0	0	0	0	0	0	0	0	0
Total Volume	0	0	0	0	0	0	0	0	0	0
% App. Total	0	0		0	0		0	0		
PHF	.000	.000	.000	.000	.000	.000	.000	.000	.000	.000

Counts Unlimited, Inc.
25424 Jaclyn Avenue
Moreno Valley, CA 92557
(951) 247-6716

County of San Bernardino
N/S: Lake Gregory Drive
E/W: State Route 18
Weather: Sunny

File Name : CSBLG18SUN
Site Code : 00313182
Start Date : 3/25/2007
Page No : 2

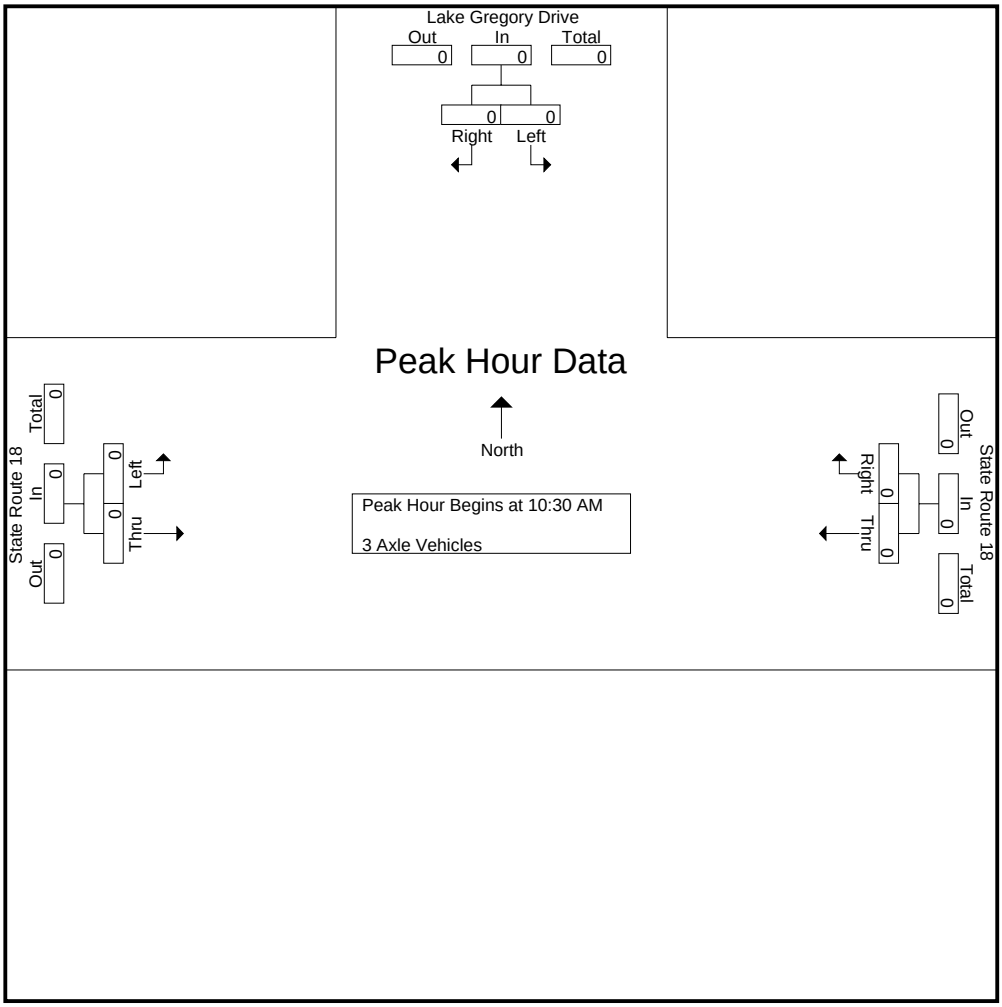

Peak Hour Analysis From 10:30 AM to 11:15 AM - Peak 1 of 1

Peak Hour for Each Approach Begins at:

	10:30 AM			10:30 AM			10:30 AM		
+0 mins.	0	0	0	0	0	0	0	0	0
+15 mins.	0	0	0	0	0	0	0	0	0
+30 mins.	0	0	0	0	0	0	0	0	0
+45 mins.	0	0	0	0	0	0	0	0	0
Total Volume	0	0	0	0	0	0	0	0	0
% App. Total	0	0		0	0		0	0	
PHF	.000	.000	.000	.000	.000	.000	.000	.000	.000

Counts Unlimited, Inc.
25424 Jaclyn Avenue
Moreno Valley, CA 92557
(951) 247-6716

County of San Bernardino
N/S: Lake Gregory Drive
E/W: State Route 18
Weather: Sunny

File Name : CSBLG18SUN
Site Code : 00313182
Start Date : 3/25/2007
Page No : 1

Groups Printed- 4+ Axle Trucks

	Lake Gregory Drive Southbound			State Route 18 Westbound			State Route 18 Eastbound			
Start Time	Left	Right	App. Total	Thru	Right	App. Total	Left	Thru	App. Total	Int. Total
09:30 AM	0	0	0	0	0	0	0	0	0	0
09:45 AM	0	0	0	0	0	0	0	0	0	0
Total	0	0	0	0	0	0	0	0	0	0
10:00 AM	0	0	0	0	0	0	0	0	0	0
10:15 AM	0	0	0	1	0	1	0	0	0	1
10:30 AM	0	0	0	0	0	0	0	0	0	0
10:45 AM	0	0	0	0	0	0	0	0	0	0
Total	0	0	0	1	0	1	0	0	0	1
11:00 AM	0	0	0	0	0	0	0	0	0	0
11:15 AM	0	0	0	0	0	0	0	0	0	0
Grand Total	0	0	0	1	0	1	0	0	0	1
Apprch %	0	0		100	0		0	0		
Total %	0	0	0	100	0	100	0	0	0	

	Lake Gregory Drive Southbound			State Route 18 Westbound			State Route 18 Eastbound			
Start Time	Left	Right	App. Total	Thru	Right	App. Total	Left	Thru	App. Total	Int. Total
Peak Hour Analysis From 10:30 AM to 11:15 AM - Peak 1 of 1										
Peak Hour for Entire Intersection Begins at 10:30 AM										
10:30 AM	0	0	0	0	0	0	0	0	0	0
10:45 AM	0	0	0	0	0	0	0	0	0	0
11:00 AM	0	0	0	0	0	0	0	0	0	0
11:15 AM	0	0	0	0	0	0	0	0	0	0
Total Volume	0	0	0	0	0	0	0	0	0	0
% App. Total	0	0		0	0		0	0		
PHF	.000	.000	.000	.000	.000	.000	.000	.000	.000	.000

Counts Unlimited, Inc.
25424 Jaclyn Avenue
Moreno Valley, CA 92557
(951) 247-6716

County of San Bernardino
N/S: Lake Gregory Drive
E/W: State Route 18
Weather: Sunny

File Name : CSBLG18SUN
Site Code : 00313182
Start Date : 3/25/2007
Page No : 2

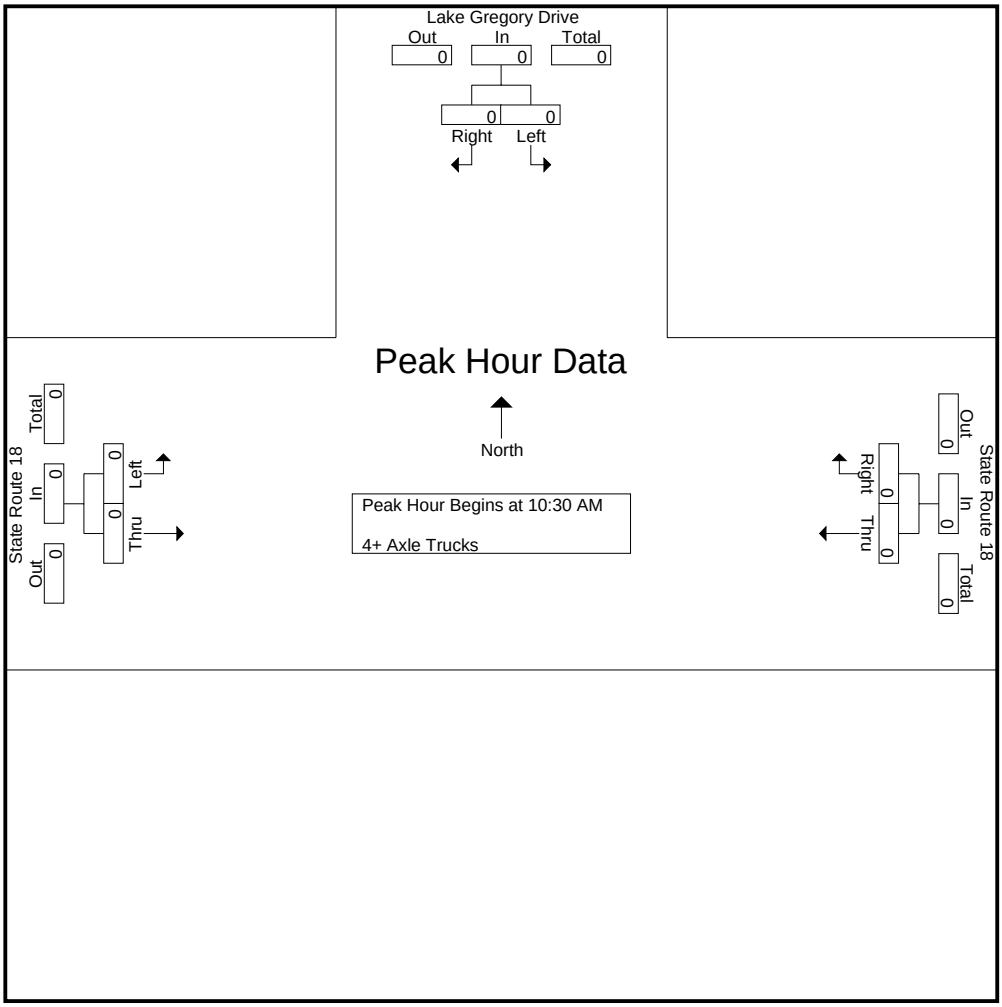

Peak Hour Analysis From 10:30 AM to 11:15 AM - Peak 1 of 1

Peak Hour for Each Approach Begins at:

	10:30 AM			10:30 AM			10:30 AM		
+0 mins.	0	0	0	0	0	0	0	0	0
+15 mins.	0	0	0	0	0	0	0	0	0
+30 mins.	0	0	0	0	0	0	0	0	0
+45 mins.	0	0	0	0	0	0	0	0	0
Total Volume	0	0	0	0	0	0	0	0	0
% App. Total	0	0		0	0		0	0	
PHF	.000	.000	.000	.000	.000	.000	.000	.000	.000

Counts Unlimited Inc.
25424 Jaclyn Avenue
Moreno Valley, CA 92557
951-247-6716

County of San Bernardino
N/S: Bear Springs Road
E/W: State Route 18
Weather: Sunny

File Name : CSBBS18SAT
Site Code : 00313189
Start Date : 3/24/2007
Page No : 1

Groups Printed- Total Volume

	Bear Springs Road Southbound				State Route 18 Westbound				Bear Springs Road Northbound				State Route 18 Eastbound				
Start Time	Left	Thru	Right	App. Total	Left	Thru	Right	App. Total	Left	Thru	Right	App. Total	Left	Thru	Right	App. Total	Int. Total
10:30 AM	4	0	6	10	2	107	3	112	1	0	0	1	3	120	1	124	247
10:45 AM	9	0	10	19	2	107	8	117	0	0	3	3	7	121	0	128	267
Total	13	0	16	29	4	214	11	229	1	0	3	4	10	241	1	252	514
11:00 AM	2	0	11	13	1	103	4	108	0	0	3	3	11	137	0	148	272
11:15 AM	12	0	4	16	0	108	5	113	0	0	1	1	9	137	0	146	276
11:30 AM	11	0	6	17	5	122	8	135	1	0	0	1	9	131	0	140	293
11:45 AM	6	0	5	11	0	126	2	128	0	0	0	0	9	154	1	164	303
Total	31	0	26	57	6	459	19	484	1	0	4	5	38	559	1	598	1144
12:00 PM	4	0	9	13	2	122	5	129	0	0	2	2	10	142	0	152	296
12:15 PM	5	0	6	11	0	120	10	130	0	0	0	0	4	118	1	123	264
Grand Total	53	0	57	110	12	915	45	972	2	0	9	11	62	1060	3	1125	2218
Apprch %	48.2	0	51.8		1.2	94.1	4.6		18.2	0	81.8		5.5	94.2	0.3		
Total %	2.4	0	2.6	5	0.5	41.3	2	43.8	0.1	0	0.4	0.5	2.8	47.8	0.1	50.7	

	Bear Springs Road Southbound				State Route 18 Westbound				Bear Springs Road Northbound				State Route 18 Eastbound				
Start Time	Left	Thru	Right	App. Total	Left	Thru	Right	App. Total	Left	Thru	Right	App. Total	Left	Thru	Right	App. Total	Int. Total
Peak Hour Analysis From 10:30 AM to 12:15 PM - Peak 1 of 1																	
Peak Hour for Entire Intersection Begins at 11:15 AM																	
11:15 AM	**12**	0	4	16	0	108	5	113	0	0	1	1	9	137	0	146	276
11:30 AM	11	0	6	**17**	**5**	122	**8**	**135**	**1**	0	0	1	9	131	0	140	293
11:45 AM	6	0	5	11	0	**126**	2	128	0	0	0	0	9	**154**	**1**	**164**	**303**
12:00 PM	4	0	**9**	13	2	122	5	129	0	0	**2**	**2**	**10**	142	0	152	296
Total Volume	33	0	24	57	7	478	20	505	1	0	3	4	37	564	1	602	1168
% App. Total	57.9	0	42.1		1.4	94.7	4		25	0	75		6.1	93.7	0.2		
PHF	.688	.000	.667	.838	.350	.948	.625	.935	.250	.000	.375	.500	.925	.916	.250	.918	.964

Counts Unlimited Inc.
25424 Jaclyn Avenue
Moreno Valley, CA 92557
951-247-6716

County of San Bernardino
N/S: Bear Springs Road
E/W: State Route 18
Weather: Sunny

File Name : CSBBS18SAT
Site Code : 00313189
Start Date : 3/24/2007
Page No : 2

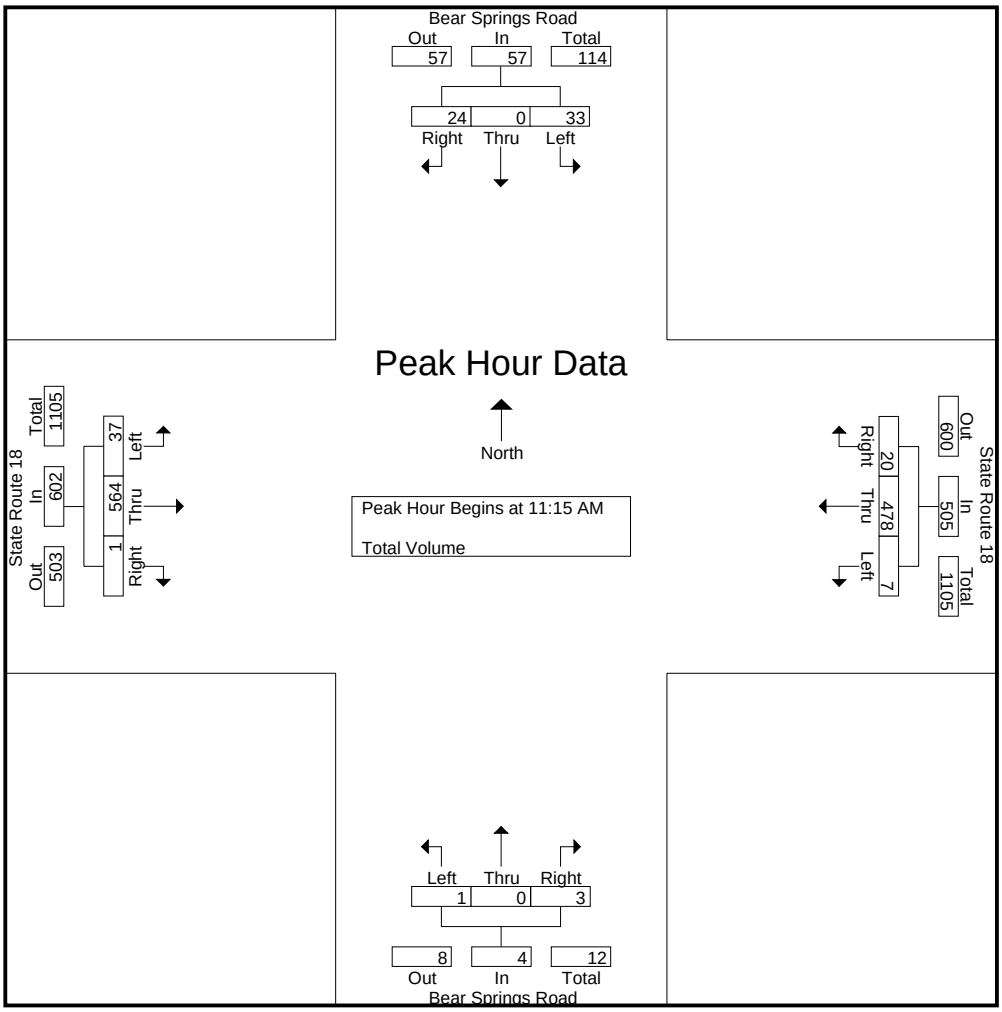

Peak Hour Analysis From 10:30 AM to 12:15 PM - Peak 1 of 1

Peak Hour for Each Approach Begins at:

	10:45 AM				11:30 AM				10:30 AM				11:15 AM			
+0 mins.	9	0	10	**19**	**5**	122	8	**135**	**1**	0	0	1	9	137	0	146
+15 mins.	2	0	**11**	13	0	**126**	2	128	0	0	**3**	**3**	9	131	0	140
+30 mins.	**12**	0	4	16	2	122	5	129	0	0	3	3	9	**154**	**1**	**164**
+45 mins.	11	0	6	17	0	120	**10**	130	0	0	1	1	**10**	142	0	152
Total Volume	34	0	31	65	7	490	25	522	1	0	7	8	37	564	1	602
% App. Total	52.3	0	47.7		1.3	93.9	4.8		12.5	0	87.5		6.1	93.7	0.2	
PHF	.708	.000	.705	.855	.350	.972	.625	.967	.250	.000	.583	.667	.925	.916	.250	.918

Counts Unlimited Inc.
25424 Jaclyn Avenue
Moreno Valley, CA 92557
951-247-6716

County of San Bernardino
N/S: Bear Springs Road
E/W:State Route 18
Weather: Sunny

File Name : CSBBS18SUN
Site Code : 00313144
Start Date : 4/1/2007
Page No : 1

Groups Printed- Total Volume

	Bear Springs Road Southbound				State Route 18 Westbound				Bear Springs Road Northbound				State Route 18 Eastbound				
Start Time	Left	Thru	Right	App. Total	Left	Thru	Right	App. Total	Left	Thru	Right	App. Total	Left	Thru	Right	App. Total	Int. Total
09:30 AM	11	0	2	13	0	89	4	93	0	0	1	1	2	57	0	59	166
09:45 AM	3	0	6	9	1	68	5	74	0	0	0	0	4	56	1	61	144
Total	14	0	8	22	1	157	9	167	0	0	1	1	6	113	1	120	310
10:00 AM	1	0	4	5	2	93	1	96	0	0	0	0	5	57	2	64	165
10:15 AM	1	0	5	6	2	103	1	106	2	0	1	3	2	47	1	50	165
10:30 AM	3	2	3	8	0	99	5	104	0	0	1	1	5	77	1	83	196
10:45 AM	6	0	11	17	0	112	5	117	0	0	0	0	4	91	0	95	229
Total	11	2	23	36	4	407	12	423	2	0	2	4	16	272	4	292	755
11:00 AM	1	0	1	2	3	81	0	84	8	0	4	12	0	99	7	106	204
11:15 AM	0	0	0	0	5	78	1	84	4	0	7	11	4	105	2	111	206
Grand Total	26	2	32	60	13	723	22	758	14	0	14	28	26	589	14	629	1475
Apprch %	43.3	3.3	53.3		1.7	95.4	2.9		50	0	50		4.1	93.6	2.2		
Total %	1.8	0.1	2.2	4.1	0.9	49	1.5	51.4	0.9	0	0.9	1.9	1.8	39.9	0.9	42.6	

	Bear Springs Road Southbound				State Route 18 Westbound				Bear Springs Road Northbound				State Route 18 Eastbound				
Start Time	Left	Thru	Right	App. Total	Left	Thru	Right	App. Total	Left	Thru	Right	App. Total	Left	Thru	Right	App. Total	Int. Total
Peak Hour Analysis From 09:30 AM to 11:15 AM - Peak 1 of 1																	
Peak Hour for Entire Intersection Begins at 10:30 AM																	
10:30 AM	3	**2**	3	8	0	99	**5**	104	0	0	1	1	**5**	77	1	83	196
10:45 AM	**6**	0	**11**	**17**	0	**112**	5	**117**	0	0	0	0	4	91	0	95	**229**
11:00 AM	1	0	1	2	3	81	0	84	**8**	0	4	**12**	0	99	**7**	106	204
11:15 AM	0	0	0	0	**5**	78	1	84	4	0	**7**	11	4	**105**	2	**111**	206
Total Volume	10	2	15	27	8	370	11	389	12	0	12	24	13	372	10	395	835
% App. Total	37	7.4	55.6		2.1	95.1	2.8		50	0	50		3.3	94.2	2.5		
PHF	.417	.250	.341	.397	.400	.826	.550	.831	.375	.000	.429	.500	.650	.886	.357	.890	.912

Counts Unlimited Inc.
25424 Jaclyn Avenue
Moreno Valley, CA 92557
951-247-6716

County of San Bernardino
N/S: Bear Springs Road
E/W:State Route 18
Weather: Sunny

File Name : CSBBS18SUN
Site Code : 00313144
Start Date : 4/1/2007
Page No : 2

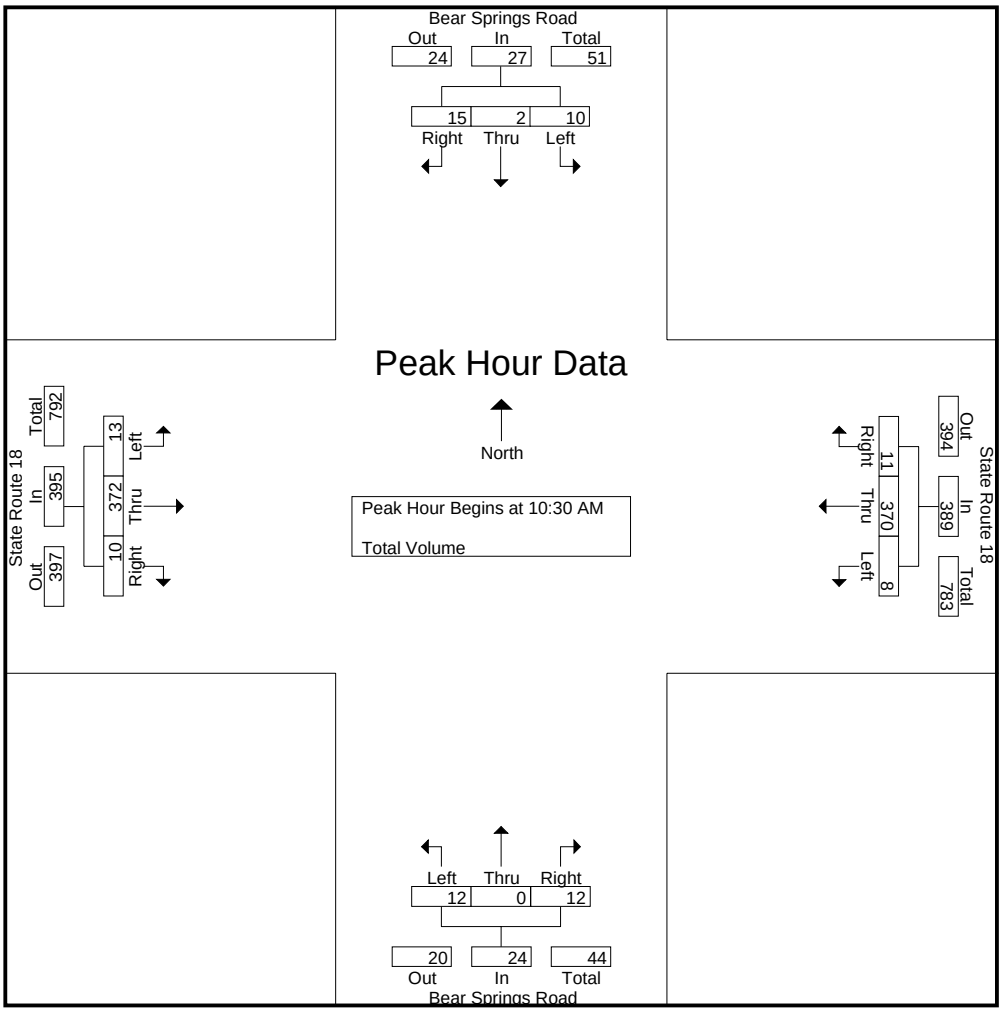

Peak Hour Analysis From 09:30 AM to 11:15 AM - Peak 1 of 1

Peak Hour for Each Approach Begins at:

	10:00 AM				10:00 AM				10:30 AM				10:30 AM			
+0 mins.	1	0	4	5	**2**	93	1	96	0	0	1	1	**5**	77	1	83
+15 mins.	1	0	5	6	2	103	1	106	0	0	0	0	4	91	0	95
+30 mins.	3	**2**	3	8	0	99	**5**	104	**8**	0	4	**12**	0	99	**7**	106
+45 mins.	**6**	0	**11**	**17**	0	**112**	5	**117**	4	0	**7**	11	4	**105**	2	**111**
Total Volume	11	2	23	36	4	407	12	423	12	0	12	24	13	372	10	395
% App. Total	30.6	5.6	63.9		0.9	96.2	2.8		50	0	50		3.3	94.2	2.5	
PHF	.458	.250	.523	.529	.500	.908	.600	.904	.375	.000	.429	.500	.650	.886	.357	.890

Counts Unlimited, Inc.
25424 Jaclyn Avenue
Moreno Valley, CA 92557
(951) 247-6716

County of San Bernardino
N/S: Daley Canyon Road
E/W: State Route 18
Weather: Sunny

File Name : CSBDC18SAT
Site Code : 00313123
Start Date : 3/24/2007
Page No : 1

Groups Printed- Passenger Vehicles - Large 2 Axle Vehicles - 3 Axle Vehicles - 4+ Axle Trucks

	Daley Canyon Road Southbound			State Route 18 Westbound			State Route 18 Eastbound			
Start Time	Left	Right	App. Total	Thru	Right	App. Total	Left	Thru	App. Total	Int. Total
10:30 AM	0	64	64	48	0	48	43	79	122	234
10:45 AM	0	62	62	52	0	52	53	81	134	248
Total	0	126	126	100	0	100	96	160	256	482
11:00 AM	0	60	60	44	0	44	54	82	136	240
11:15 AM	0	60	60	52	0	52	61	84	145	257
11:30 AM	0	59	59	72	0	72	61	94	155	286
11:45 AM	0	54	54	67	0	67	64	91	155	276
Total	0	233	233	235	0	235	240	351	591	1059
12:00 PM	0	49	49	69	0	69	55	98	153	271
12:15 PM	0	52	52	72	0	72	40	76	116	240
Grand Total	0	460	460	476	0	476	431	685	1116	2052
Apprch %	0	100		100	0		38.6	61.4		
Total %	0	22.4	22.4	23.2	0	23.2	21	33.4	54.4	
Passenger Vehicles	0	453	453	463	0	463	427	672	1099	2015
% Passenger Vehicles	0	98.5	98.5	97.3	0	97.3	99.1	98.1	98.5	98.2
Large 2 Axle Vehicles	0	7	7	9	0	9	3	10	13	29
% Large 2 Axle Vehicles	0	1.5	1.5	1.9	0	1.9	0.7	1.5	1.2	1.4
3 Axle Vehicles	0	0	0	1	0	1	0	2	2	3
% 3 Axle Vehicles	0	0	0	0.2	0	0.2	0	0.3	0.2	0.1
4+ Axle Trucks	0	0	0	3	0	3	1	1	2	5
% 4+ Axle Trucks	0	0	0	0.6	0	0.6	0.2	0.1	0.2	0.2

	Daley Canyon Road Southbound			State Route 18 Westbound			State Route 18 Eastbound			
Start Time	Left	Right	App. Total	Thru	Right	App. Total	Left	Thru	App. Total	Int. Total
Peak Hour Analysis From 10:30 AM to 12:15 PM - Peak 1 of 1										
Peak Hour for Entire Intersection Begins at 11:15 AM										
11:15 AM	0	**60**	**60**	52	0	52	61	84	145	257
11:30 AM	0	59	59	**72**	0	**72**	61	94	**155**	**286**
11:45 AM	0	54	54	67	0	67	**64**	91	155	276
12:00 PM	0	49	49	69	0	69	55	**98**	153	271
Total Volume	0	222	222	260	0	260	241	367	608	1090
% App. Total	0	100		100	0		39.6	60.4		
PHF	.000	.925	.925	.903	.000	.903	.941	.936	.981	.953

Counts Unlimited, Inc.
25424 Jaclyn Avenue
Moreno Valley, CA 92557
(951) 247-6716

County of San Bernardino
N/S: Daley Canyon Road
E/W: State Route 18
Weather: Sunny

File Name : CSBDC18SAT
Site Code : 00313123
Start Date : 3/24/2007
Page No : 2

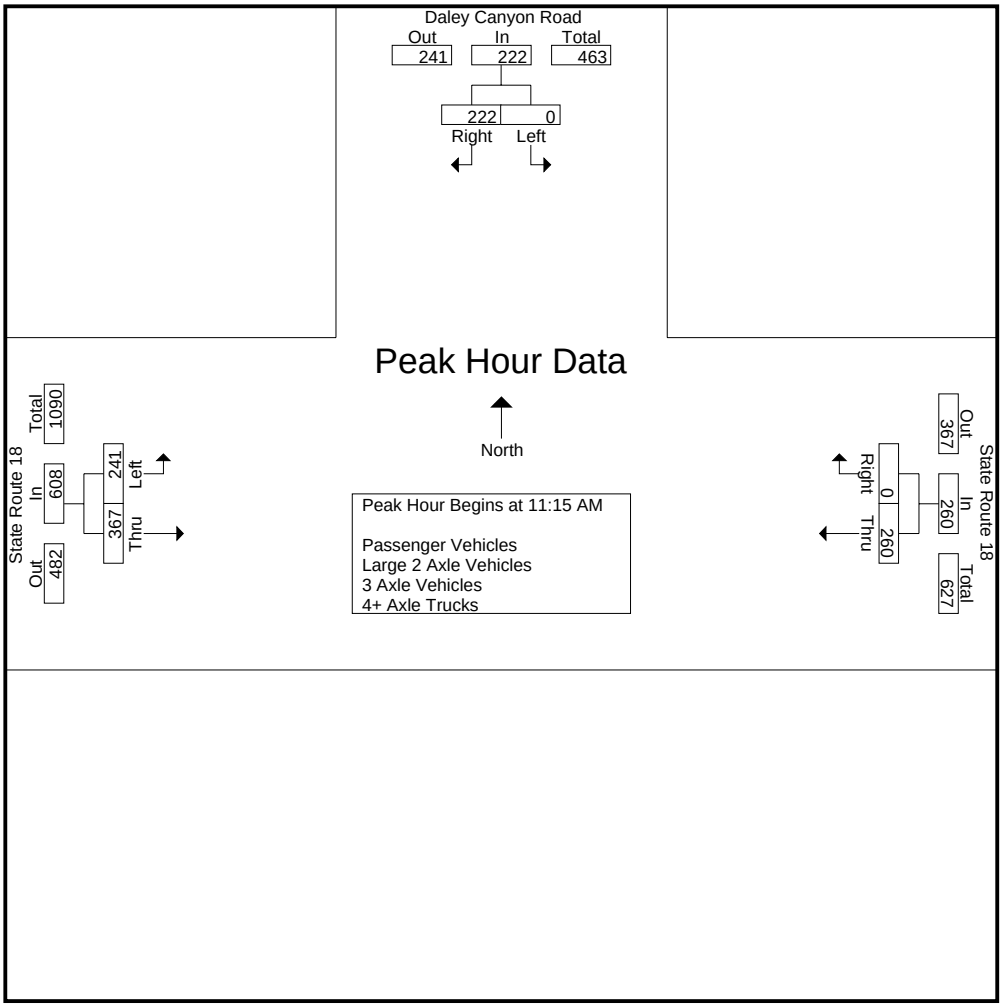

Peak Hour Analysis From 10:30 AM to 12:15 PM - Peak 1 of 1

Peak Hour for Each Approach Begins at:

	10:30 AM			11:30 AM			11:15 AM		
+0 mins.	0	**64**	**64**	**72**	0	**72**	61	84	145
+15 mins.	0	62	62	67	0	67	61	94	**155**
+30 mins.	0	60	60	69	0	69	**64**	91	155
+45 mins.	0	60	60	72	0	72	55	**98**	153
Total Volume	0	246	246	280	0	280	241	367	608
% App. Total	0	100		100	0		39.6	60.4	
PHF	.000	.961	.961	.972	.000	.972	.941	.936	.981

Counts Unlimited, Inc.
25424 Jaclyn Avenue
Moreno Valley, CA 92557
(951) 247-6716

County of San Bernardino
N/S: Daley Canyon Road
E/W: State Route 18
Weather: Sunny

File Name : CSBDC18SAT
Site Code : 00313123
Start Date : 3/24/2007
Page No : 1

Groups Printed- Passenger Vehicles

	Daley Canyon Road Southbound			State Route 18 Westbound			State Route 18 Eastbound			
Start Time	Left	Right	App. Total	Thru	Right	App. Total	Left	Thru	App. Total	Int. Total
10:30 AM	0	63	63	48	0	48	41	76	117	228
10:45 AM	0	60	60	51	0	51	53	80	133	244
Total	0	123	123	99	0	99	94	156	250	472
11:00 AM	0	59	59	41	0	41	54	79	133	233
11:15 AM	0	59	59	49	0	49	61	84	145	253
11:30 AM	0	57	57	69	0	69	60	90	150	276
11:45 AM	0	54	54	67	0	67	64	91	155	276
Total	0	229	229	226	0	226	239	344	583	1038
12:00 PM	0	49	49	68	0	68	55	97	152	269
12:15 PM	0	52	52	70	0	70	39	75	114	236
Grand Total	0	453	453	463	0	463	427	672	1099	2015
Apprch %	0	100		100	0		38.9	61.1		
Total %	0	22.5	22.5	23	0	23	21.2	33.3	54.5	

	Daley Canyon Road Southbound			State Route 18 Westbound			State Route 18 Eastbound			
Start Time	Left	Right	App. Total	Thru	Right	App. Total	Left	Thru	App. Total	Int. Total
Peak Hour Analysis From 11:15 AM to 12:00 PM - Peak 1 of 1										
Peak Hour for Entire Intersection Begins at 11:15 AM										
11:15 AM	0	**59**	**59**	49	0	49	61	84	145	253
11:30 AM	0	57	57	**69**	0	**69**	60	90	150	**276**
11:45 AM	0	54	54	67	0	67	**64**	91	**155**	276
12:00 PM	0	49	49	68	0	68	55	**97**	152	269
Total Volume	0	219	219	253	0	253	240	362	602	1074
% App. Total	0	100		100	0		39.9	60.1		
PHF	.000	.928	.928	.917	.000	.917	.938	.933	.971	.973

Counts Unlimited, Inc.
25424 Jaclyn Avenue
Moreno Valley, CA 92557
(951) 247-6716

County of San Bernardino
N/S: Daley Canyon Road
E/W: State Route 18
Weather: Sunny

File Name : CSBDC18SAT
Site Code : 00313123
Start Date : 3/24/2007
Page No : 2

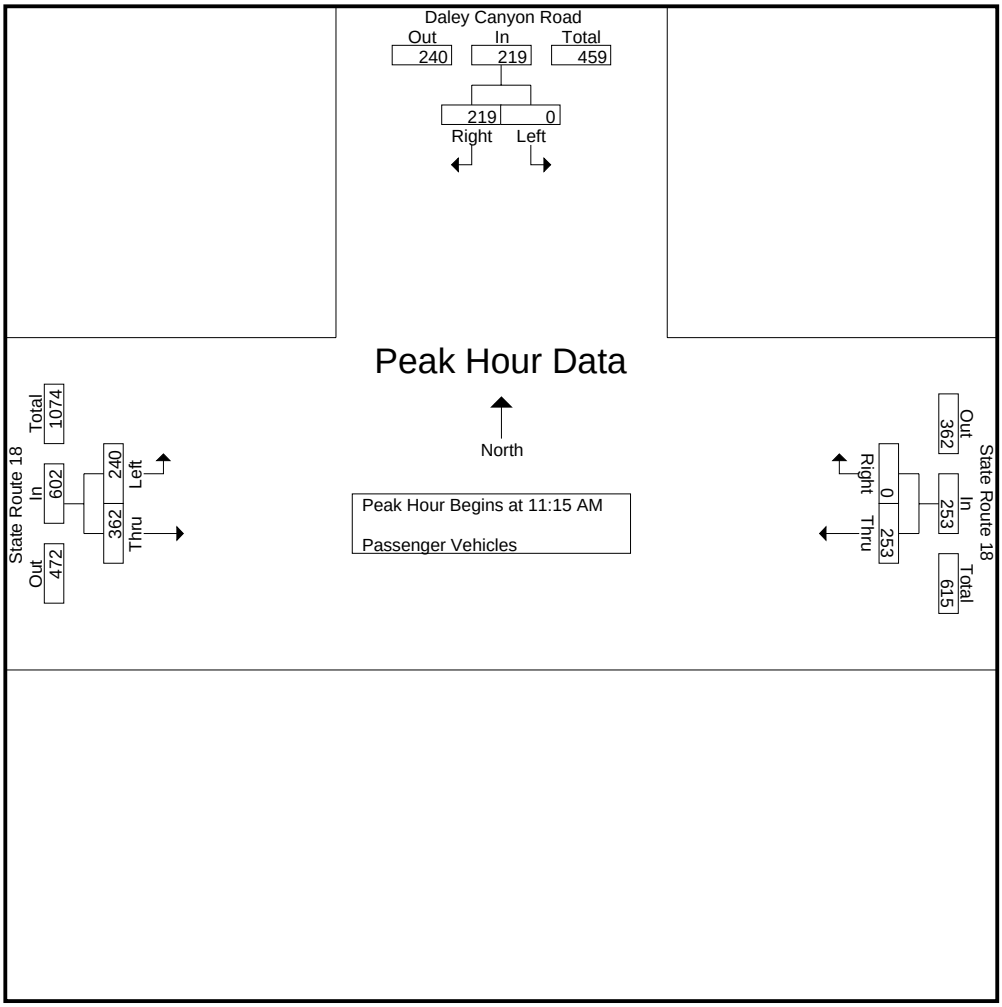

Peak Hour Analysis From 11:15 AM to 12:00 PM - Peak 1 of 1

Peak Hour for Each Approach Begins at:

	11:15 AM			11:15 AM			11:15 AM		
+0 mins.	0	**59**	**59**	49	0	49	61	84	145
+15 mins.	0	57	57	**69**	0	**69**	60	90	150
+30 mins.	0	54	54	67	0	67	**64**	91	**155**
+45 mins.	0	49	49	68	0	68	55	**97**	152
Total Volume	0	219	219	253	0	253	240	362	602
% App. Total	0	100		100	0		39.9	60.1	
PHF	.000	.928	.928	.917	.000	.917	.938	.933	.971

Counts Unlimited, Inc.
25424 Jaclyn Avenue
Moreno Valley, CA 92557
(951) 247-6716

County of San Bernardino
N/S: Daley Canyon Road
E/W: State Route 18
Weather: Sunny

File Name : CSBDC18SAT
Site Code : 00313123
Start Date : 3/24/2007
Page No : 1

Groups Printed- Large 2 Axle Vehicles

	Daley Canyon Road Southbound			State Route 18 Westbound			State Route 18 Eastbound			
Start Time	Left	Right	App. Total	Thru	Right	App. Total	Left	Thru	App. Total	Int. Total
10:30 AM	0	1	1	0	0	0	1	3	4	5
10:45 AM	0	2	2	0	0	0	0	0	0	2
Total	0	3	3	0	0	0	1	3	4	7
11:00 AM	0	1	1	1	0	1	0	3	3	5
11:15 AM	0	1	1	2	0	2	0	0	0	3
11:30 AM	0	2	2	3	0	3	1	3	4	9
11:45 AM	0	0	0	0	0	0	0	0	0	0
Total	0	4	4	6	0	6	1	6	7	17
12:00 PM	0	0	0	1	0	1	0	0	0	1
12:15 PM	0	0	0	2	0	2	1	1	2	4
Grand Total	0	7	7	9	0	9	3	10	13	29
Apprch %	0	100		100	0		23.1	76.9		
Total %	0	24.1	24.1	31	0	31	10.3	34.5	44.8	

	Daley Canyon Road Southbound			State Route 18 Westbound			State Route 18 Eastbound			
Start Time	Left	Right	App. Total	Thru	Right	App. Total	Left	Thru	App. Total	Int. Total
Peak Hour Analysis From 11:15 AM to 12:00 PM - Peak 1 of 1										
Peak Hour for Entire Intersection Begins at 11:15 AM										
11:15 AM	0	1	1	2	0	2	0	0	0	3
11:30 AM	0	**2**	**2**	**3**	0	**3**	**1**	**3**	**4**	**9**
11:45 AM	0	0	0	0	0	0	0	0	0	0
12:00 PM	0	0	0	1	0	1	0	0	0	1
Total Volume	0	3	3	6	0	6	1	3	4	13
% App. Total	0	100		100	0		25	75		
PHF	.000	.375	.375	.500	.000	.500	.250	.250	.250	.361

Counts Unlimited, Inc.
25424 Jaclyn Avenue
Moreno Valley, CA 92557
(951) 247-6716

County of San Bernardino
N/S: Daley Canyon Road
E/W: State Route 18
Weather: Sunny

File Name : CSBDC18SAT
Site Code : 00313123
Start Date : 3/24/2007
Page No : 2

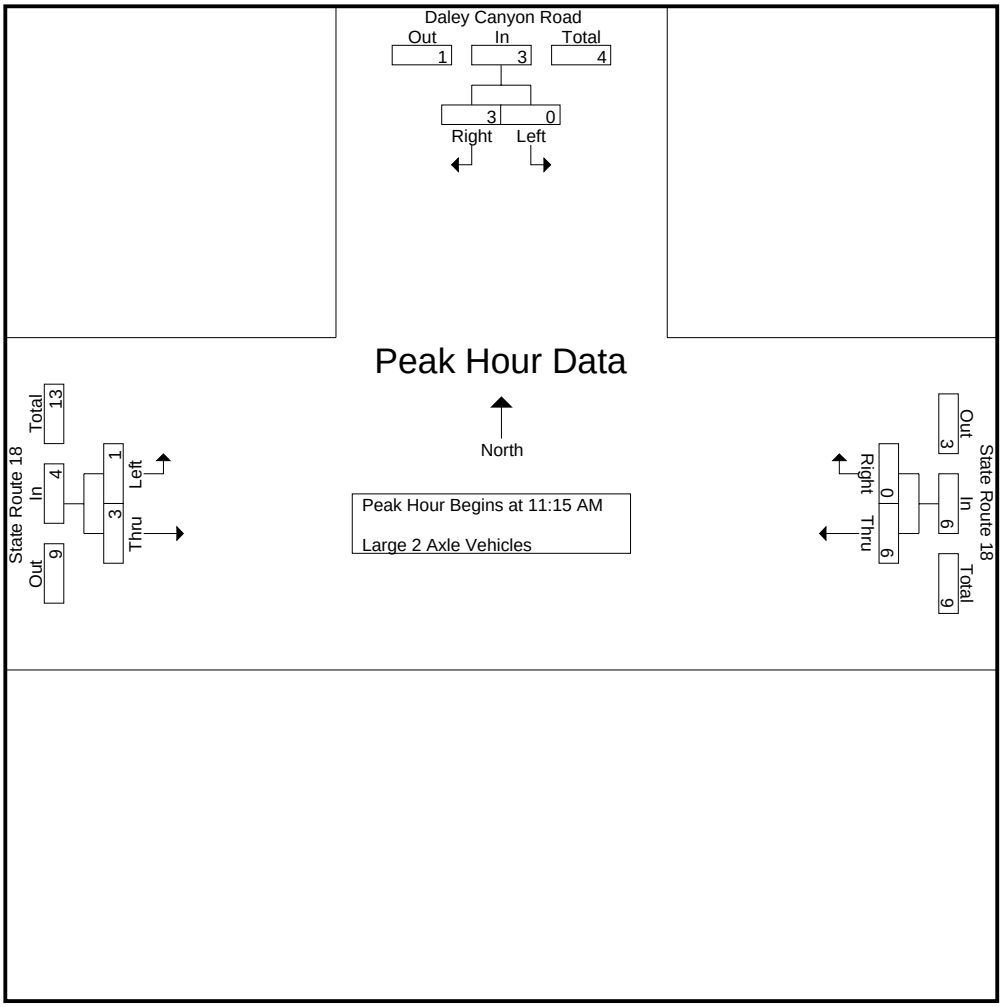

Peak Hour Analysis From 11:15 AM to 12:00 PM - Peak 1 of 1

Peak Hour for Each Approach Begins at:

	11:15 AM			11:15 AM			11:15 AM		
+0 mins.	0	1	1	2	0	2	0	0	0
+15 mins.	0	**2**	**2**	**3**	0	**3**	**1**	**3**	**4**
+30 mins.	0	0	0	0	0	0	0	0	0
+45 mins.	0	0	0	1	0	1	0	0	0
Total Volume	0	3	3	6	0	6	1	3	4
% App. Total	0	100		100	0		25	75	
PHF	.000	.375	.375	.500	.000	.500	.250	.250	.250

Counts Unlimited, Inc.
25424 Jaclyn Avenue
Moreno Valley, CA 92557
(951) 247-6716

County of San Bernardino
N/S: Daley Canyon Road
E/W: State Route 18
Weather: Sunny

File Name : CSBDC18SAT
Site Code : 00313123
Start Date : 3/24/2007
Page No : 1

Groups Printed- 3 Axle Vehicles

	Daley Canyon Road Southbound			State Route 18 Westbound			State Route 18 Eastbound			
Start Time	Left	Right	App. Total	Thru	Right	App. Total	Left	Thru	App. Total	Int. Total
10:30 AM	0	0	0	0	0	0	0	0	0	0
10:45 AM	0	0	0	0	0	0	0	1	1	1
Total	0	0	0	0	0	0	0	1	1	1
11:00 AM	0	0	0	0	0	0	0	0	0	0
11:15 AM	0	0	0	1	0	1	0	0	0	1
11:30 AM	0	0	0	0	0	0	0	0	0	0
11:45 AM	0	0	0	0	0	0	0	0	0	0
Total	0	0	0	1	0	1	0	0	0	1
12:00 PM	0	0	0	0	0	0	0	1	1	1
12:15 PM	0	0	0	0	0	0	0	0	0	0
Grand Total	0	0	0	1	0	1	0	2	2	3
Apprch %	0	0		100	0		0	100		
Total %	0	0	0	33.3	0	33.3	0	66.7	66.7	

	Daley Canyon Road Southbound			State Route 18 Westbound			State Route 18 Eastbound			
Start Time	Left	Right	App. Total	Thru	Right	App. Total	Left	Thru	App. Total	Int. Total
Peak Hour Analysis From 11:15 AM to 12:00 PM - Peak 1 of 1										
Peak Hour for Entire Intersection Begins at 11:15 AM										
11:15 AM	0	0	0	**1**	0	**1**	0	0	0	**1**
11:30 AM	0	0	0	0	0	0	0	0	0	0
11:45 AM	0	0	0	0	0	0	0	0	0	0
12:00 PM	0	0	0	0	0	0	0	**1**	**1**	1
Total Volume	0	0	0	1	0	1	0	1	1	2
% App. Total	0	0		100	0		0	100		
PHF	.000	.000	.000	.250	.000	.250	.000	.250	.250	.500

Counts Unlimited, Inc.
25424 Jaclyn Avenue
Moreno Valley, CA 92557
(951) 247-6716

County of San Bernardino
N/S: Daley Canyon Road
E/W: State Route 18
Weather: Sunny

File Name : CSBDC18SAT
Site Code : 00313123
Start Date : 3/24/2007
Page No : 2

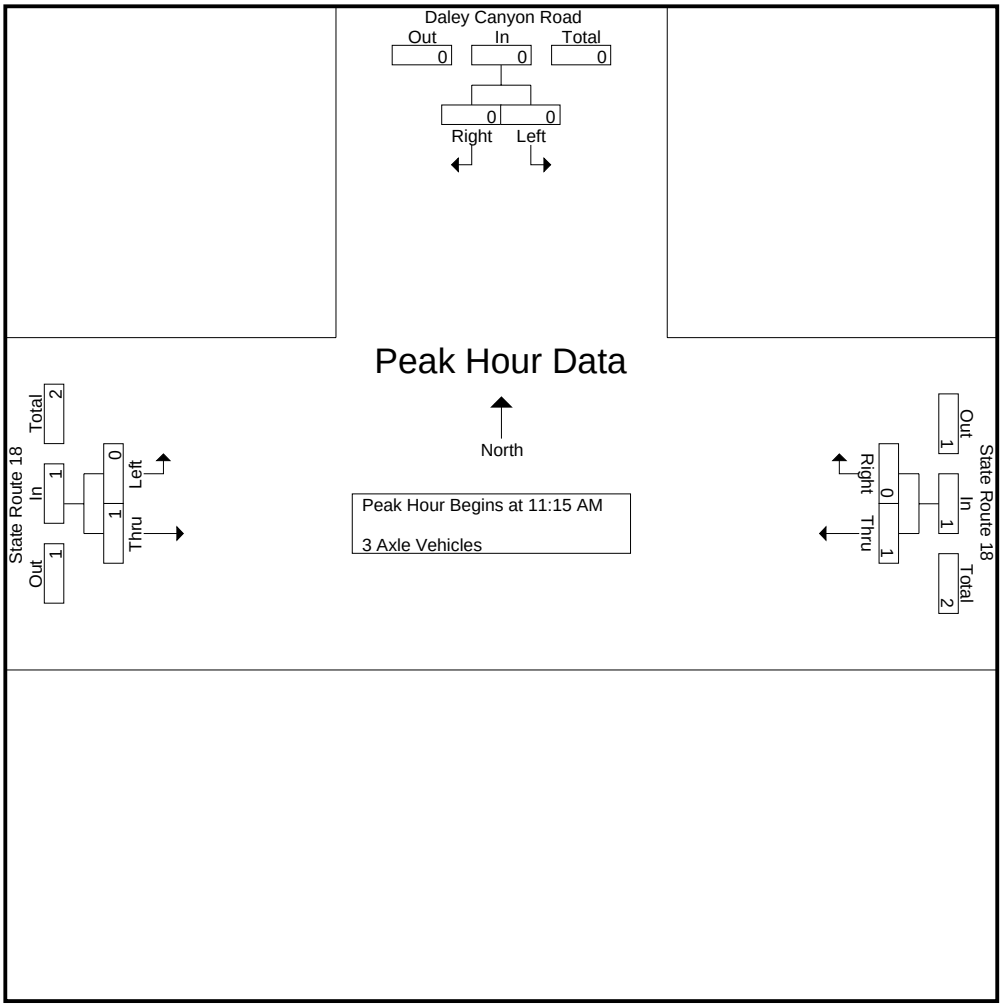

Peak Hour Analysis From 11:15 AM to 12:00 PM - Peak 1 of 1

Peak Hour for Each Approach Begins at:

	11:15 AM			11:15 AM			11:15 AM		
+0 mins.	0	0	0	**1**	0	**1**	0	0	0
+15 mins.	0	0	0	0	0	0	0	0	0
+30 mins.	0	0	0	0	0	0	0	0	0
+45 mins.	0	0	0	0	0	0	0	**1**	**1**
Total Volume	0	0	0	1	0	1	0	1	1
% App. Total	0	0		100	0		0	100	
PHF	.000	.000	.000	.250	.000	.250	.000	.250	.250

Counts Unlimited, Inc.
25424 Jaclyn Avenue
Moreno Valley, CA 92557
(951) 247-6716

County of San Bernardino
N/S: Daley Canyon Road
E/W: State Route 18
Weather: Sunny

File Name : CSBDC18SAT
Site Code : 00313123
Start Date : 3/24/2007
Page No : 1

Groups Printed- 4+ Axle Trucks

	Daley Canyon Road Southbound			State Route 18 Westbound			State Route 18 Eastbound			
Start Time	Left	Right	App. Total	Thru	Right	App. Total	Left	Thru	App. Total	Int. Total
10:30 AM	0	0	0	0	0	0	1	0	1	1
10:45 AM	0	0	0	1	0	1	0	0	0	1
Total	0	0	0	1	0	1	1	0	1	2
11:00 AM	0	0	0	2	0	2	0	0	0	2
11:15 AM	0	0	0	0	0	0	0	0	0	0
11:30 AM	0	0	0	0	0	0	0	1	1	1
11:45 AM	0	0	0	0	0	0	0	0	0	0
Total	0	0	0	2	0	2	0	1	1	3
12:00 PM	0	0	0	0	0	0	0	0	0	0
12:15 PM	0	0	0	0	0	0	0	0	0	0
Grand Total	0	0	0	3	0	3	1	1	2	5
Apprch %	0	0		100	0		50	50		
Total %	0	0	0	60	0	60	20	20	40	

	Daley Canyon Road Southbound			State Route 18 Westbound			State Route 18 Eastbound			
Start Time	Left	Right	App. Total	Thru	Right	App. Total	Left	Thru	App. Total	Int. Total
Peak Hour Analysis From 11:15 AM to 12:00 PM - Peak 1 of 1										
Peak Hour for Entire Intersection Begins at 11:15 AM										
11:15 AM	0	0	0	0	0	0	0	0	0	0
11:30 AM	0	0	0	0	0	0	0	**1**	**1**	**1**
11:45 AM	0	0	0	0	0	0	0	0	0	0
12:00 PM	0	0	0	0	0	0	0	0	0	0
Total Volume	0	0	0	0	0	0	0	1	1	1
% App. Total	0	0		0	0		0	100		
PHF	.000	.000	.000	.000	.000	.000	.000	.250	.250	.250

Counts Unlimited, Inc.
25424 Jaclyn Avenue
Moreno Valley, CA 92557
(951) 247-6716

County of San Bernardino
N/S: Daley Canyon Road
E/W: State Route 18
Weather: Sunny

File Name : CSBDC18SAT
Site Code : 00313123
Start Date : 3/24/2007
Page No : 2

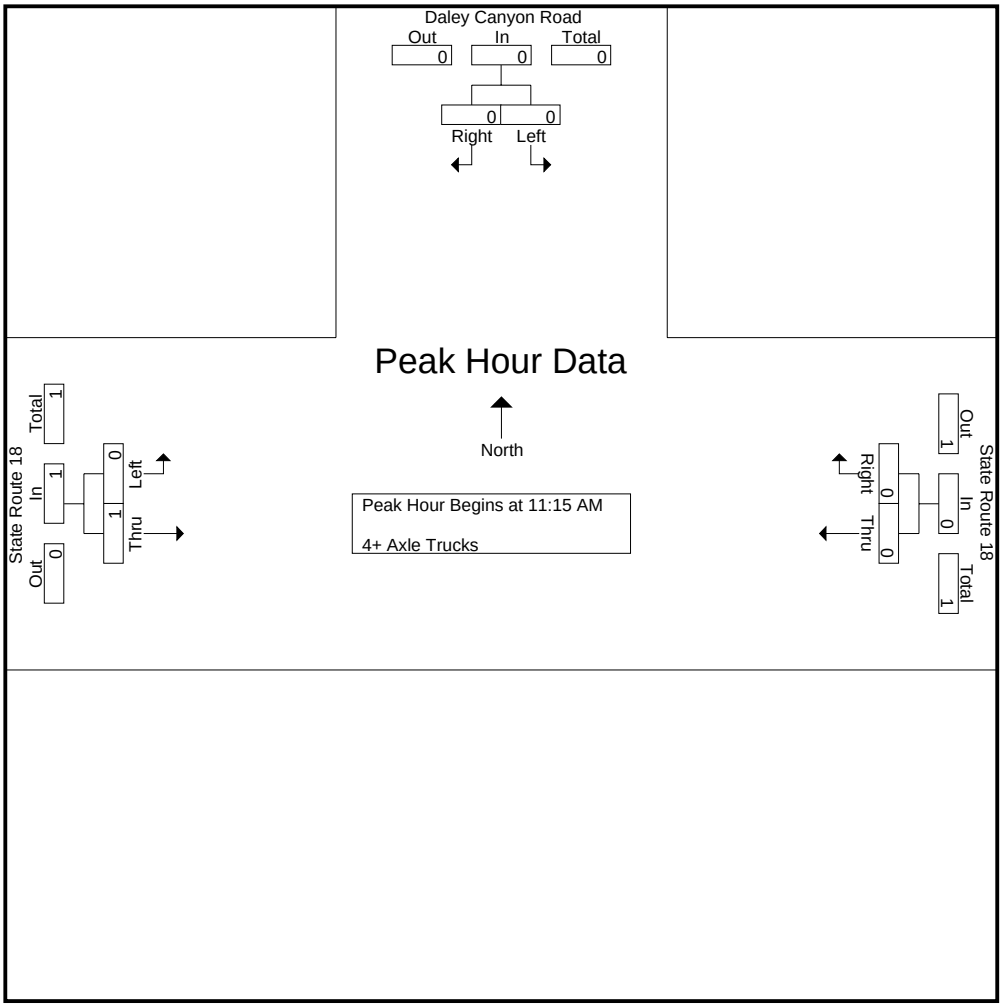

Peak Hour Analysis From 11:15 AM to 12:00 PM - Peak 1 of 1

Peak Hour for Each Approach Begins at:

	11:15 AM			11:15 AM			11:15 AM		
+0 mins.	0	0	0	0	0	0	0	0	0
+15 mins.	0	0	0	0	0	0	0	**1**	**1**
+30 mins.	0	0	0	0	0	0	0	0	0
+45 mins.	0	0	0	0	0	0	0	0	0
Total Volume	0	0	0	0	0	0	0	1	1
% App. Total	0	0		0	0		0	100	
PHF	.000	.000	.000	.000	.000	.000	.000	.250	.250

Counts Unlimited Inc.
25424 Jaclyn Avenue
Moreno Valley, CA 92557
(951) 247-6716

County of San Bernardino
N/S: Daley Canyon Road
E/W: State Route 18
Weather: Sunny

File Name : CSBDC18SUN
Site Code : 00313111
Start Date : 3/25/2007
Page No : 1

Groups Printed- Passenger Vehicles - Large 2 Axle Vehicles - 3 Axle Vehicles - 4+ Axle Trucks

	Daley Canyon Road Southbound			State Route 18 Westbound			State Route 18 Eastbound			
Start Time	Left	Right	App. Total	Thru	Right	App. Total	Left	Thru	App. Total	Int. Total
09:30 AM	0	47	47	45	2	47	19	32	51	145
09:45 AM	0	44	44	43	0	43	24	60	84	171
Total	0	91	91	88	2	90	43	92	135	316
10:00 AM	2	57	59	64	3	67	27	38	65	191
10:15 AM	0	46	46	50	0	50	19	60	79	175
10:30 AM	0	45	45	64	0	64	33	53	86	195
10:45 AM	1	46	47	54	0	54	32	58	90	191
Total	3	194	197	232	3	235	111	209	320	752
11:00 AM	1	75	76	49	0	49	26	48	74	199
11:15 AM	0	61	61	62	1	63	37	52	89	213
Grand Total	4	421	425	431	6	437	217	401	618	1480
Apprch %	0.9	99.1		98.6	1.4		35.1	64.9		
Total %	0.3	28.4	28.7	29.1	0.4	29.5	14.7	27.1	41.8	
Passenger Vehicles	4	417	421	426	6	432	213	399	612	1465
% Passenger Vehicles	100	99	99.1	98.8	100	98.9	98.2	99.5	99	99
Large 2 Axle Vehicles	0	4	4	4	0	4	3	2	5	13
% Large 2 Axle Vehicles	0	1	0.9	0.9	0	0.9	1.4	0.5	0.8	0.9
3 Axle Vehicles	0	0	0	0	0	0	0	0	0	0
% 3 Axle Vehicles	0	0	0	0	0	0	0	0	0	0
4+ Axle Trucks	0	0	0	1	0	1	1	0	1	2
% 4+ Axle Trucks	0	0	0	0.2	0	0.2	0.5	0	0.2	0.1

No SB left/No WB Right allowed

	Daley Canyon Road Southbound			State Route 18 Westbound			State Route 18 Eastbound			
Start Time	Left	Right	App. Total	Thru	Right	App. Total	Left	Thru	App. Total	Int. Total
Peak Hour Analysis From 09:30 AM to 11:15 AM - Peak 1 of 1										
Peak Hour for Entire Intersection Begins at 10:30 AM										
10:30 AM	0	45	45	64	0	64	33	53	86	195
10:45 AM	1	46	47	54	0	54	32	58	90	191
11:00 AM	1	75	76	49	0	49	26	48	74	199
11:15 AM	0	61	61	62	1	63	37	52	89	213
Total Volume	2	227	229	229	1	230	128	211	339	798
% App. Total	0.9	99.1		99.6	0.4		37.8	62.2		
PHF	.500	.757	.753	.895	.250	.898	.865	.909	.942	.937

Counts Unlimited Inc.
25424 Jaclyn Avenue
Moreno Valley, CA 92557
(951) 247-6716

County of San Bernardino
N/S: Daley Canyon Road
E/W: State Route 18
Weather: Sunny

File Name : CSBDC18SUN
Site Code : 00313111
Start Date : 3/25/2007
Page No : 2

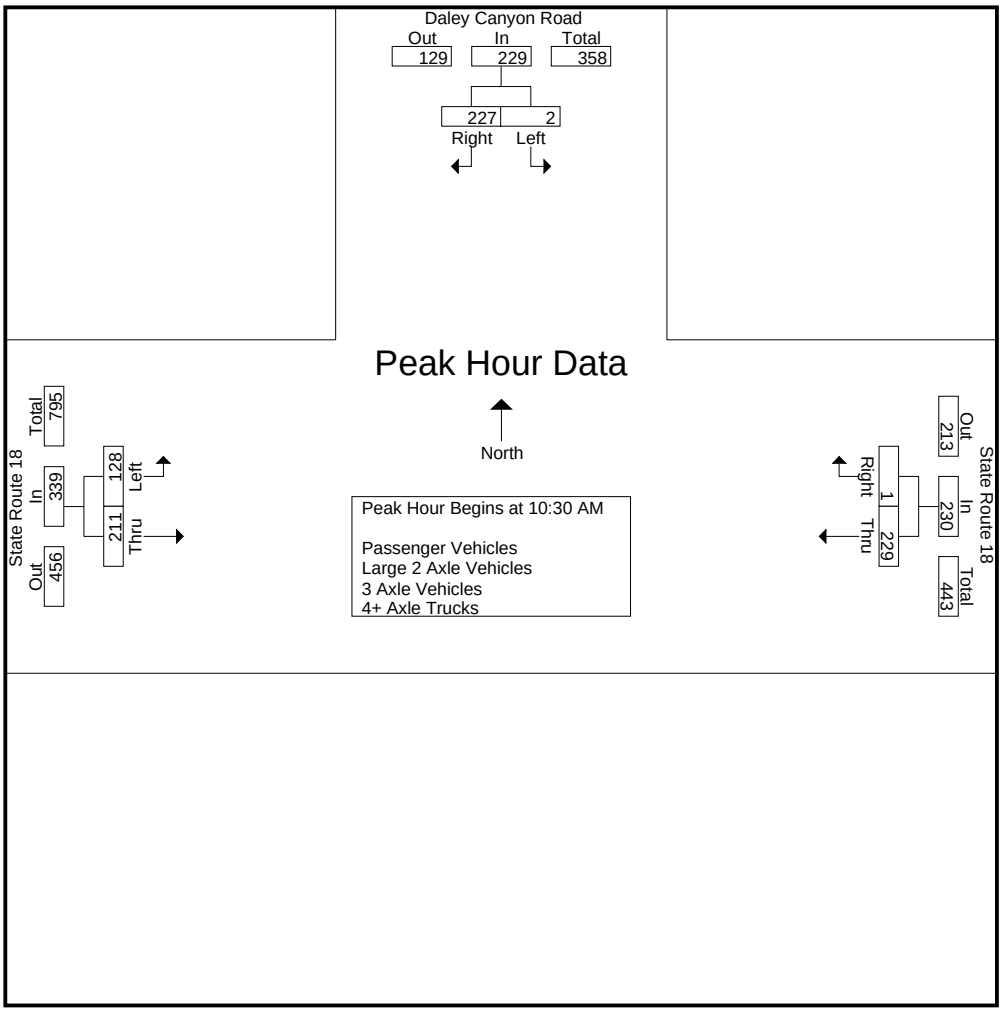

Peak Hour Analysis From 09:30 AM to 11:15 AM - Peak 1 of 1

Peak Hour for Each Approach Begins at:

	10:30 AM			10:00 AM			10:30 AM		
+0 mins.	0	45	45	64	3	67	33	53	86
+15 mins.	1	46	47	50	0	50	32	58	90
+30 mins.	1	75	76	64	0	64	26	48	74
+45 mins.	0	61	61	54	0	54	37	52	89
Total Volume	2	227	229	232	3	235	128	211	339
% App. Total	0.9	99.1		98.7	1.3		37.8	62.2	
PHF	.500	.757	.753	.906	.250	.877	.865	.909	.942

Counts Unlimited Inc.
25424 Jaclyn Avenue
Moreno Valley, CA 92557
(951) 247-6716

County of San Bernardino
N/S: Daley Canyon Road
E/W: State Route 18
Weather: Sunny

File Name : CSBDC18SUN
Site Code : 00313111
Start Date : 3/25/2007
Page No : 1

Groups Printed- Passenger Vehicles

	Daley Canyon Road Southbound			State Route 18 Westbound			State Route 18 Eastbound			
Start Time	Left	Right	App. Total	Thru	Right	App. Total	Left	Thru	App. Total	Int. Total
09:30 AM	0	47	47	45	2	47	19	32	51	145
09:45 AM	0	44	44	43	0	43	24	60	84	171
Total	0	91	91	88	2	90	43	92	135	316
10:00 AM	2	56	58	62	3	65	27	38	65	188
10:15 AM	0	46	46	50	0	50	18	59	77	173
10:30 AM	0	45	45	62	0	62	31	52	83	190
10:45 AM	1	46	47	54	0	54	32	58	90	191
Total	3	193	196	228	3	231	108	207	315	742
11:00 AM	1	73	74	48	0	48	25	48	73	195
11:15 AM	0	60	60	62	1	63	37	52	89	212
Grand Total	4	417	421	426	6	432	213	399	612	1465
Apprch %	1	99		98.6	1.4		34.8	65.2		
Total %	0.3	28.5	28.7	29.1	0.4	29.5	14.5	27.2	41.8	

No SB left/No WB Right allowed

	Daley Canyon Road Southbound			State Route 18 Westbound			State Route 18 Eastbound			
Start Time	Left	Right	App. Total	Thru	Right	App. Total	Left	Thru	App. Total	Int. Total
Peak Hour Analysis From 09:30 AM to 11:15 AM - Peak 1 of 1										
Peak Hour for Entire Intersection Begins at 10:30 AM										
10:30 AM	0	45	45	62	0	62	31	52	83	190
10:45 AM	1	46	47	54	0	54	32	58	90	191
11:00 AM	1	73	74	48	0	48	25	48	73	195
11:15 AM	0	60	60	62	1	63	37	52	89	212
Total Volume	2	224	226	226	1	227	125	210	335	788
% App. Total	0.9	99.1		99.6	0.4		37.3	62.7		
PHF	.500	.767	.764	.911	.250	.901	.845	.905	.931	.929

Counts Unlimited Inc.
25424 Jaclyn Avenue
Moreno Valley, CA 92557
(951) 247-6716

County of San Bernardino
N/S: Daley Canyon Road
E/W: State Route 18
Weather: Sunny

File Name : CSBDC18SUN
Site Code : 00313111
Start Date : 3/25/2007
Page No : 2

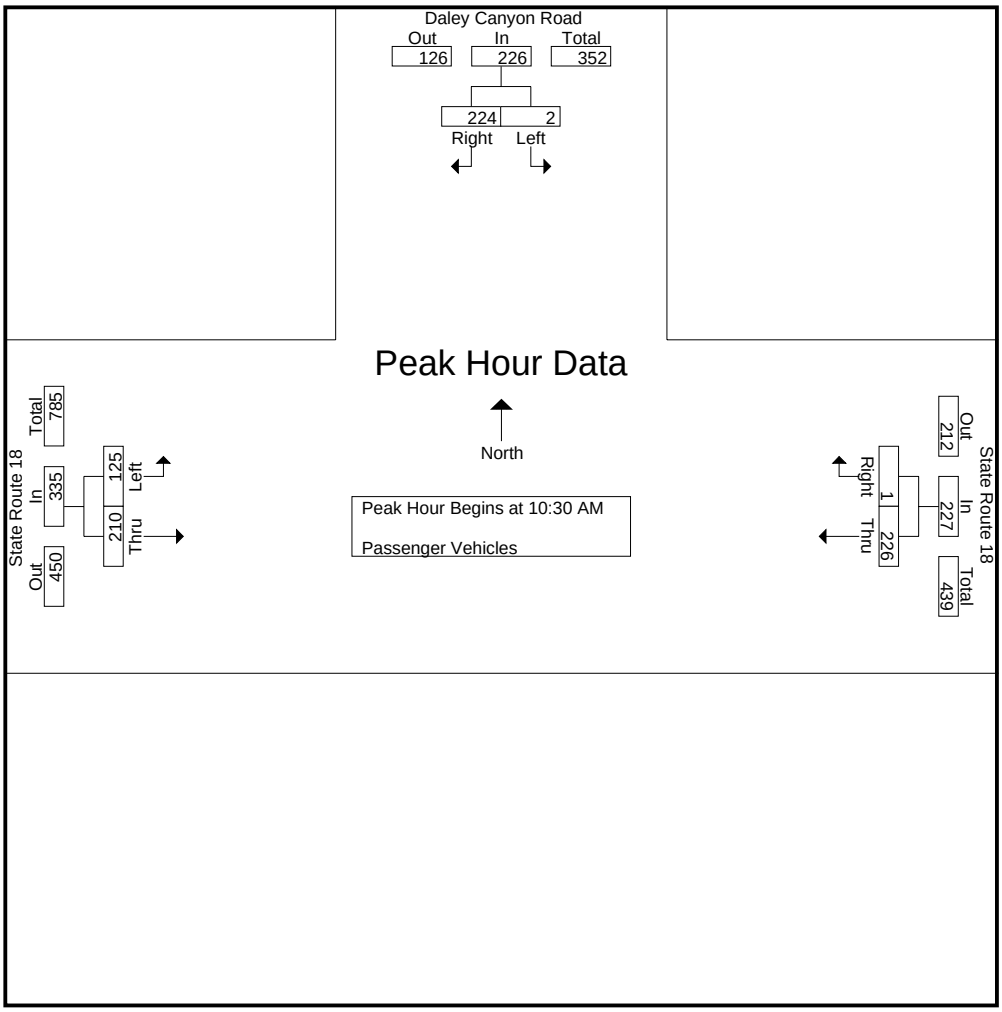

Peak Hour Analysis From 09:30 AM to 11:15 AM - Peak 1 of 1

Peak Hour for Each Approach Begins at:

	10:30 AM			10:00 AM			10:30 AM		
+0 mins.	0	45	45	62	3	65	31	52	83
+15 mins.	1	46	47	50	0	50	32	58	90
+30 mins.	1	73	74	62	0	62	25	48	73
+45 mins.	0	60	60	54	0	54	37	52	89
Total Volume	2	224	226	228	3	231	125	210	335
% App. Total	0.9	99.1		98.7	1.3		37.3	62.7	
PHF	.500	.767	.764	.919	.250	.888	.845	.905	.931

Counts Unlimited Inc.
25424 Jaclyn Avenue
Moreno Valley, CA 92557
(951) 247-6716

County of San Bernardino
N/S: Daley Canyon Road
E/W: State Route 18
Weather: Sunny

File Name : CSBDC18SUN
Site Code : 00313111
Start Date : 3/25/2007
Page No : 1

Groups Printed- Large 2 Axle Vehicles

	Daley Canyon Road Southbound			State Route 18 Westbound			State Route 18 Eastbound			
Start Time	Left	Right	App. Total	Thru	Right	App. Total	Left	Thru	App. Total	Int. Total
09:30 AM	0	0	0	0	0	0	0	0	0	0
09:45 AM	0	0	0	0	0	0	0	0	0	0
Total	0	0	0	0	0	0	0	0	0	0
10:00 AM	0	1	1	1	0	1	0	0	0	2
10:15 AM	0	0	0	0	0	0	1	1	2	2
10:30 AM	0	0	0	2	0	2	1	1	2	4
10:45 AM	0	0	0	0	0	0	0	0	0	0
Total	0	1	1	3	0	3	2	2	4	8
11:00 AM	0	2	2	1	0	1	1	0	1	4
11:15 AM	0	1	1	0	0	0	0	0	0	1
Grand Total	0	4	4	4	0	4	3	2	5	13
Apprch %	0	100		100	0		60	40		
Total %	0	30.8	30.8	30.8	0	30.8	23.1	15.4	38.5	

No SB left/No WB Right allowed

	Daley Canyon Road Southbound			State Route 18 Westbound			State Route 18 Eastbound			
Start Time	Left	Right	App. Total	Thru	Right	App. Total	Left	Thru	App. Total	Int. Total
Peak Hour Analysis From 09:30 AM to 11:15 AM - Peak 1 of 1										
Peak Hour for Entire Intersection Begins at 10:15 AM										
10:15 AM	0	0	0	0	0	0	1	1	2	2
10:30 AM	0	0	0	2	0	2	1	1	2	4
10:45 AM	0	0	0	0	0	0	0	0	0	0
11:00 AM	0	2	2	1	0	1	1	0	1	4
Total Volume	0	2	2	3	0	3	3	2	5	10
% App. Total	0	100		100	0		60	40		
PHF	.000	.250	.250	.375	.000	.375	.750	.500	.625	.625

Counts Unlimited Inc.
25424 Jaclyn Avenue
Moreno Valley, CA 92557
(951) 247-6716

County of San Bernardino
N/S: Daley Canyon Road
E/W: State Route 18
Weather: Sunny

File Name : CSBDC18SUN
Site Code : 00313111
Start Date : 3/25/2007
Page No : 2

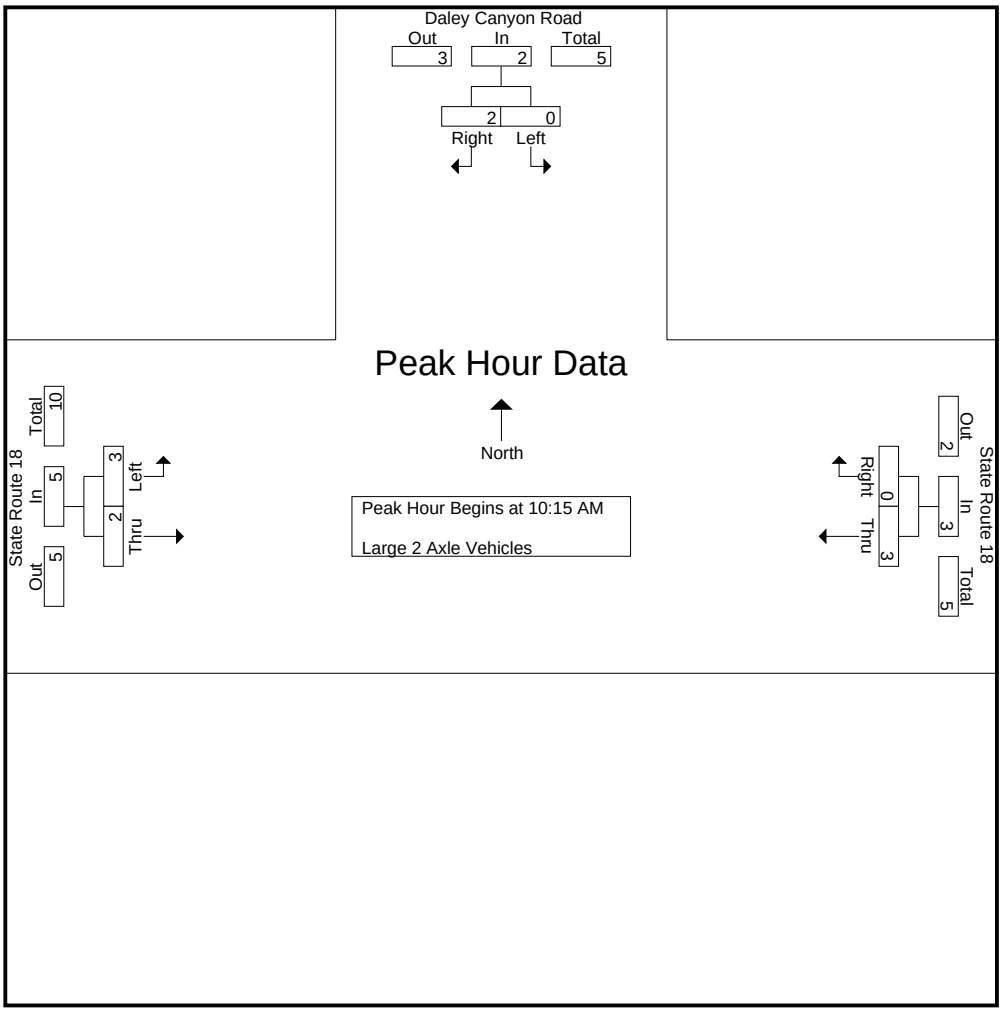

Peak Hour Analysis From 09:30 AM to 11:15 AM - Peak 1 of 1

Peak Hour for Each Approach Begins at:

	10:30 AM			09:45 AM			10:15 AM		
+0 mins.	0	0	0	0	0	0	1	1	2
+15 mins.	0	0	0	1	0	1	1	1	2
+30 mins.	0	2	2	0	0	0	0	0	0
+45 mins.	0	1	1	2	0	2	1	0	1
Total Volume	0	3	3	3	0	3	3	2	5
% App. Total	0	100		100	0		60	40	
PHF	.000	.375	.375	.375	.000	.375	.750	.500	.625

Counts Unlimited Inc.
25424 Jaclyn Avenue
Moreno Valley, CA 92557
(951) 247-6716

County of San Bernardino
N/S: Daley Canyon Road
E/W: State Route 18
Weather: Sunny

File Name : CSBDC18SUN
Site Code : 00313111
Start Date : 3/25/2007
Page No : 1

Groups Printed- 3 Axle Vehicles

	Daley Canyon Road Southbound			State Route 18 Westbound			State Route 18 Eastbound			
Start Time	Left	Right	App. Total	Thru	Right	App. Total	Left	Thru	App. Total	Int. Total
09:30 AM	0	0	0	0	0	0	0	0	0	0
09:45 AM	0	0	0	0	0	0	0	0	0	0
Total	0	0	0	0	0	0	0	0	0	0
10:00 AM	0	0	0	0	0	0	0	0	0	0
10:15 AM	0	0	0	0	0	0	0	0	0	0
10:30 AM	0	0	0	0	0	0	0	0	0	0
10:45 AM	0	0	0	0	0	0	0	0	0	0
Total	0	0	0	0	0	0	0	0	0	0
11:00 AM	0	0	0	0	0	0	0	0	0	0
11:15 AM	0	0	0	0	0	0	0	0	0	0
Grand Total	0	0	0	0	0	0	0	0	0	0
Apprch %	0	0		0	0		0	0		
Total %										

No SB left/No WB Right allowed

	Daley Canyon Road Southbound			State Route 18 Westbound			State Route 18 Eastbound			
Start Time	Left	Right	App. Total	Thru	Right	App. Total	Left	Thru	App. Total	Int. Total
Peak Hour Analysis From 09:30 AM to 11:15 AM - Peak 1 of 1										
Peak Hour for Entire Intersection Begins at 09:30 AM										
09:30 AM	0	0	0	0	0	0	0	0	0	0
09:45 AM	0	0	0	0	0	0	0	0	0	0
10:00 AM	0	0	0	0	0	0	0	0	0	0
10:15 AM	0	0	0	0	0	0	0	0	0	0
Total Volume	0	0	0	0	0	0	0	0	0	0
% App. Total	0	0		0	0		0	0		
PHF	.000	.000	.000	.000	.000	.000	.000	.000	.000	.000

Counts Unlimited Inc.
25424 Jaclyn Avenue
Moreno Valley, CA 92557
(951) 247-6716

County of San Bernardino
N/S: Daley Canyon Road
E/W: State Route 18
Weather: Sunny

File Name : CSBDC18SUN
Site Code : 00313111
Start Date : 3/25/2007
Page No : 2

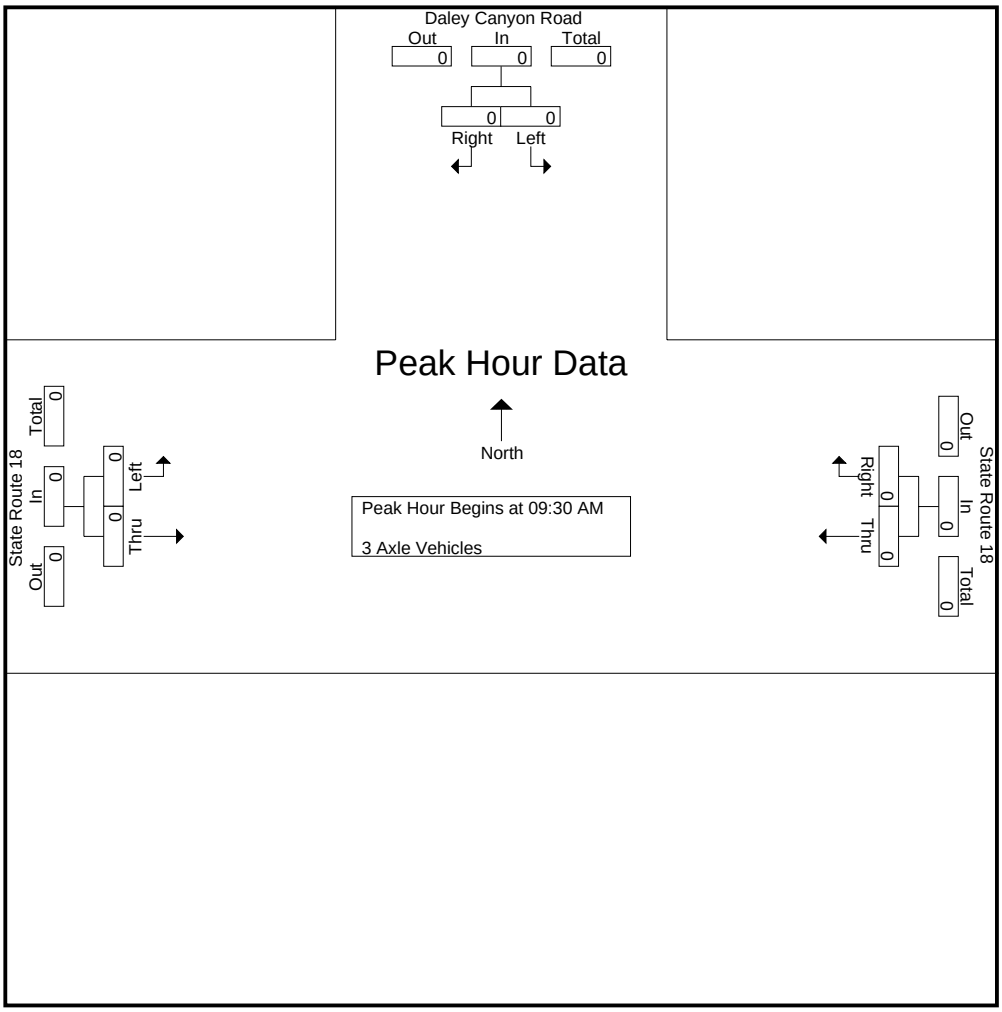

Peak Hour Analysis From 09:30 AM to 11:15 AM - Peak 1 of 1

Peak Hour for Each Approach Begins at:

	09:30 AM			09:30 AM			09:30 AM		
+0 mins.	0	0	0	0	0	0	0	0	0
+15 mins.	0	0	0	0	0	0	0	0	0
+30 mins.	0	0	0	0	0	0	0	0	0
+45 mins.	0	0	0	0	0	0	0	0	0
Total Volume	0	0	0	0	0	0	0	0	0
% App. Total	0	0		0	0		0	0	
PHF	.000	.000	.000	.000	.000	.000	.000	.000	.000

Counts Unlimited Inc.
25424 Jaclyn Avenue
Moreno Valley, CA 92557
(951) 247-6716

County of San Bernardino
N/S: Daley Canyon Road
E/W: State Route 18
Weather: Sunny

File Name : CSBDC18SUN
Site Code : 00313111
Start Date : 3/25/2007
Page No : 1

Groups Printed- 4+ Axle Trucks

	Daley Canyon Road Southbound			State Route 18 Westbound			State Route 18 Eastbound			
Start Time	Left	Right	App. Total	Thru	Right	App. Total	Left	Thru	App. Total	Int. Total
09:30 AM	0	0	0	0	0	0	0	0	0	0
09:45 AM	0	0	0	0	0	0	0	0	0	0
Total	0	0	0	0	0	0	0	0	0	0
10:00 AM	0	0	0	1	0	1	0	0	0	1
10:15 AM	0	0	0	0	0	0	0	0	0	0
10:30 AM	0	0	0	0	0	0	1	0	1	1
10:45 AM	0	0	0	0	0	0	0	0	0	0
Total	0	0	0	1	0	1	1	0	1	2
11:00 AM	0	0	0	0	0	0	0	0	0	0
11:15 AM	0	0	0	0	0	0	0	0	0	0
Grand Total	0	0	0	1	0	1	1	0	1	2
Apprch %	0	0		100	0		100	0		
Total %	0	0	0	50	0	50	50	0	50	

No SB left/No WB Right allowed

	Daley Canyon Road Southbound			State Route 18 Westbound			State Route 18 Eastbound			
Start Time	Left	Right	App. Total	Thru	Right	App. Total	Left	Thru	App. Total	Int. Total
Peak Hour Analysis From 09:30 AM to 11:15 AM - Peak 1 of 1										
Peak Hour for Entire Intersection Begins at 09:45 AM										
09:45 AM	0	0	0	0	0	0	0	0	0	0
10:00 AM	0	0	0	1	0	1	0	0	0	1
10:15 AM	0	0	0	0	0	0	0	0	0	0
10:30 AM	0	0	0	0	0	0	1	0	1	1
Total Volume	0	0	0	1	0	1	1	0	1	2
% App. Total	0	0		100	0		100	0		
PHF	.000	.000	.000	.250	.000	.250	.250	.000	.250	.500

Counts Unlimited Inc.
25424 Jaclyn Avenue
Moreno Valley, CA 92557
(951) 247-6716

County of San Bernardino
N/S: Daley Canyon Road
E/W: State Route 18
Weather: Sunny

File Name : CSBDC18SUN
Site Code : 00313111
Start Date : 3/25/2007
Page No : 2

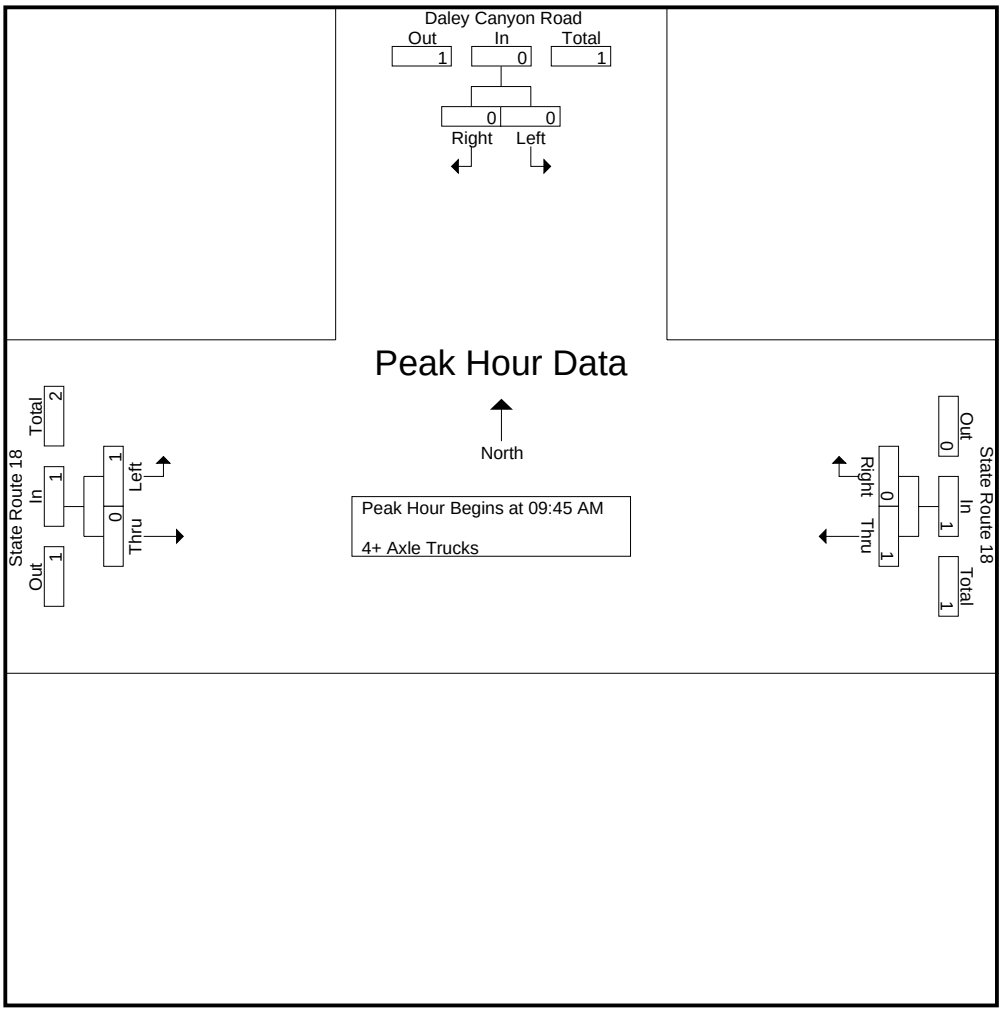

Peak Hour Analysis From 09:30 AM to 11:15 AM - Peak 1 of 1

Peak Hour for Each Approach Begins at:

	09:30 AM			09:30 AM			09:45 AM		
+0 mins.	0	0	0	0	0	0	0	0	0
+15 mins.	0	0	0	0	0	0	0	0	0
+30 mins.	0	0	0	1	0	1	0	0	0
+45 mins.	0	0	0	0	0	0	1	0	1
Total Volume	0	0	0	1	0	1	1	0	1
% App. Total	0	0		100	0		100	0	
PHF	.000	.000	.000	.250	.000	.250	.250	.000	.250

Counts Unlimited, Inc.
25424 Jaclyn Avenue
Moreno Valley, CA 92557
(951) 247-6716

County of San Bernardino
N/S: Daley Canyon Road
E/W: Daley Canyon Access
Weather: Sunny

File Name : CSBDCDCASAT
Site Code : 00313123
Start Date : 3/24/2007
Page No : 1

Groups Printed- Total Volume

	Daley Canyon Road Southbound			Daley Canyon Access Westbound			Daley Canyon Road Northbound			
Start Time	Left	Thru	App. Total	Left	Right	App. Total	Thru	Right	App. Total	Int. Total
10:30 AM	25	63	88	0	24	24	0	0	0	112
10:45 AM	27	60	87	0	28	28	0	0	0	115
Total	52	123	175	0	52	52	0	0	0	227
11:00 AM	32	59	91	0	29	29	0	0	0	120
11:15 AM	23	59	82	0	30	30	0	0	0	112
11:30 AM	28	57	85	0	27	27	0	0	0	112
11:45 AM	34	54	88	0	34	34	0	0	0	122
Total	117	229	346	0	120	120	0	0	0	466
12:00 PM	22	49	71	0	34	34	0	0	0	105
12:15 PM	38	52	90	0	28	28	0	0	0	118
Grand Total	229	453	682	0	234	234	0	0	0	916
Apprch %	33.6	66.4		0	100		0	0		
Total %	25	49.5	74.5	0	25.5	25.5	0	0	0	

	Daley Canyon Road Southbound			Daley Canyon Access Westbound			Daley Canyon Road Northbound			
Start Time	Left	Thru	App. Total	Left	Right	App. Total	Thru	Right	App. Total	Int. Total
Peak Hour Analysis From 10:30 AM to 12:15 PM - Peak 1 of 1										
Peak Hour for Entire Intersection Begins at 11:00 AM										
11:00 AM	32	**59**	**91**	0	29	29	0	0	0	120
11:15 AM	23	59	82	0	30	30	0	0	0	112
11:30 AM	28	57	85	0	27	27	0	0	0	112
11:45 AM	**34**	54	88	0	**34**	**34**	0	0	0	**122**
Total Volume	117	229	346	0	120	120	0	0	0	466
% App. Total	33.8	66.2		0	100		0	0		
PHF	.860	.970	.951	.000	.882	.882	.000	.000	.000	.955

Counts Unlimited, Inc.
25424 Jaclyn Avenue
Moreno Valley, CA 92557
(951) 247-6716

County of San Bernardino
N/S: Daley Canyon Road
E/W: Daley Canyon Access
Weather: Sunny

File Name : CSBDCDCASAT
Site Code : 00313123
Start Date : 3/24/2007
Page No : 2

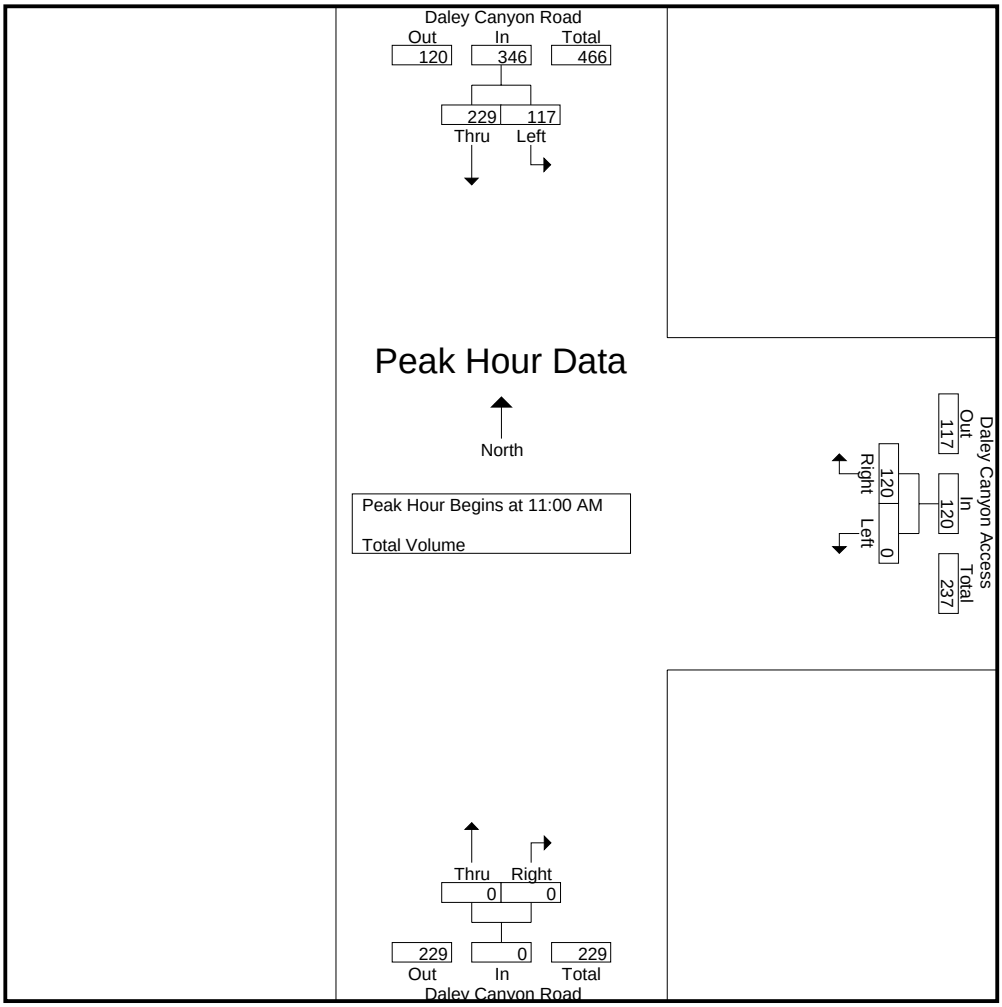

Peak Hour Analysis From 10:30 AM to 12:15 PM - Peak 1 of 1

Peak Hour for Each Approach Begins at:

	10:30 AM			11:15 AM			10:30 AM		
+0 mins.	25	**63**	88	0	30	30	0	0	0
+15 mins.	27	60	87	0	27	27	0	0	0
+30 mins.	**32**	59	**91**	0	**34**	**34**	0	0	0
+45 mins.	23	59	82	0	34	34	0	0	0
Total Volume	107	241	348	0	125	125	0	0	0
% App. Total	30.7	69.3		0	100		0	0	
PHF	.836	.956	.956	.000	.919	.919	.000	.000	.000

Counts Unlimited Inc.
25424 Jaclyn Avenue
Moreno Valley, CA 92557
(951) 247-6716

County of San Bernardino
N/S: Daley Canyon Road
E/W: Daley Canyon Access
Weather: Sunny

File Name : CSBDCDCASUN
Site Code : 00313111
Start Date : 3/25/2007
Page No : 1

Groups Printed- Total Volume

	Daley Canyon Road Southbound			Daley Canyon Access Westbound			Daley Canyon Road Northbound			
Start Time	Left	Thru	App. Total	Left	Right	App. Total	Thru	Right	App. Total	Int. Total
09:30 AM	18	47	65	0	15	15	18	0	18	98
09:45 AM	21	44	65	0	22	22	25	0	25	112
Total	39	91	130	0	37	37	43	0	43	210
10:00 AM	9	58	67	0	49	49	26	0	26	142
10:15 AM	34	45	79	0	15	15	20	0	20	114
10:30 AM	32	44	76	0	25	25	33	0	33	134
10:45 AM	48	47	95	1	24	25	32	0	32	152
Total	123	194	317	1	113	114	111	0	111	542
11:00 AM	35	74	109	0	12	12	28	0	28	149
11:15 AM	16	62	78	0	16	16	35	1	36	130
Grand Total	213	421	634	1	178	179	217	1	218	1031
Apprch %	33.6	66.4		0.6	99.4		99.5	0.5		
Total %	20.7	40.8	61.5	0.1	17.3	17.4	21	0.1	21.1	

	Daley Canyon Road Southbound			Daley Canyon Access Westbound			Daley Canyon Road Northbound			
Start Time	Left	Thru	App. Total	Left	Right	App. Total	Thru	Right	App. Total	Int. Total
Peak Hour Analysis From 09:30 AM to 10:15 AM - Peak 1 of 1										
Peak Hour for Entire Intersection Begins at 09:30 AM										
09:30 AM	18	47	65	0	15	15	18	0	18	98
09:45 AM	21	44	65	0	22	22	25	0	25	112
10:00 AM	9	58	67	0	49	49	26	0	26	142
10:15 AM	34	45	79	0	15	15	20	0	20	114
Total Volume	82	194	276	0	101	101	89	0	89	466
% App. Total	29.7	70.3		0	100		100	0		
PHF	.603	.836	.873	.000	.515	.515	.856	.000	.856	.820

Counts Unlimited Inc.
25424 Jaclyn Avenue
Moreno Valley, CA 92557
(951) 247-6716

County of San Bernardino
N/S: Daley Canyon Road
E/W: Daley Canyon Access
Weather: Sunny

File Name : CSBDCDCASUN
Site Code : 00313111
Start Date : 3/25/2007
Page No : 2

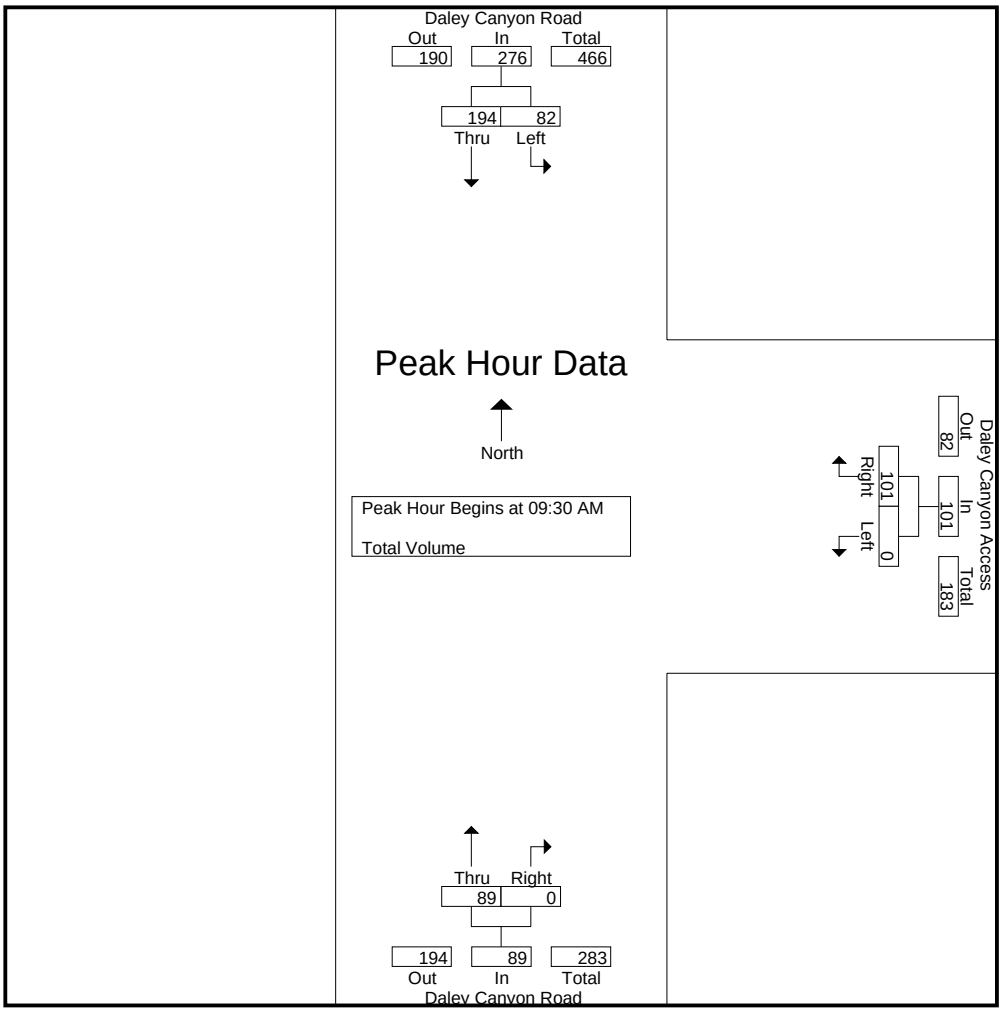

Peak Hour Analysis From 09:30 AM to 10:15 AM - Peak 1 of 1

Peak Hour for Each Approach Begins at:

	09:30 AM			09:30 AM			09:30 AM		
+0 mins.	18	47	65	0	15	15	18	0	18
+15 mins.	21	44	65	0	22	22	25	0	25
+30 mins.	9	58	67	0	49	49	26	0	26
+45 mins.	34	45	79	0	15	15	20	0	20
Total Volume	82	194	276	0	101	101	89	0	89
% App. Total	29.7	70.3		0	100		100	0	
PHF	.603	.836	.873	.000	.515	.515	.856	.000	.856

Counts Unlimited, Inc.
25424 Jaclyn Avenue
Moreno Valley, CA 92557
(951) 247-6716

County of San Bernardino
N/S: Daley Canyon Access
E/W: State Route 18
Weather: Sunny

File Name : CSBDCA18SAT
Site Code : 00313123
Start Date : 3/24/2007
Page No : 1

Groups Printed- Total Volume

	Daley Canyon Access Southbound			State Route 18 Westbound			State Route 18 Eastbound			
Start Time	Left	Rght	App. Total	Thru	Rght	App. Total	Left	Thru	App. Total	Int. Total
10:30 AM	23	0	23	48	24	72	0	76	76	171
10:45 AM	23	0	23	51	31	82	0	80	80	185
Total	46	0	46	99	55	154	0	156	156	356
11:00 AM	35	0	35	41	28	69	0	79	79	183
11:15 AM	22	0	22	49	30	79	0	84	84	185
11:30 AM	22	0	22	69	29	98	0	90	90	210
11:45 AM	38	0	38	67	30	97	0	91	91	226
Total	117	0	117	226	117	343	0	344	344	804
12:00 PM	22	0	22	68	33	101	0	97	97	220
12:15 PM	38	0	38	70	28	98	0	75	75	211
Grand Total	223	0	223	463	233	696	0	672	672	1591
Apprch %	100	0		66.5	33.5		0	100		
Total %	14	0	14	29.1	14.6	43.7	0	42.2	42.2	

	Daley Canyon Access Southbound			State Route 18 Westbound			State Route 18 Eastbound			
Start Time	Left	Rght	App. Total	Thru	Rght	App. Total	Left	Thru	App. Total	Int. Total
Peak Hour Analysis From 10:30 AM to 12:15 PM - Peak 1 of 1										
Peak Hour for Entire Intersection Begins at 11:30 AM										
11:30 AM	22	0	22	69	29	98	0	90	90	210
11:45 AM	**38**	0	**38**	67	30	97	0	91	91	**226**
12:00 PM	22	0	22	68	**33**	**101**	0	**97**	**97**	220
12:15 PM	38	0	38	**70**	28	98	0	75	75	211
Total Volume	120	0	120	274	120	394	0	353	353	867
% App. Total	100	0		69.5	30.5		0	100		
PHF	.789	.000	.789	.979	.909	.975	.000	.910	.910	.959

Counts Unlimited, Inc.
25424 Jaclyn Avenue
Moreno Valley, CA 92557
(951) 247-6716

County of San Bernardino
N/S: Daley Canyon Access
E/W: State Route 18
Weather: Sunny

File Name : CSBDCA18SAT
Site Code : 00313123
Start Date : 3/24/2007
Page No : 2

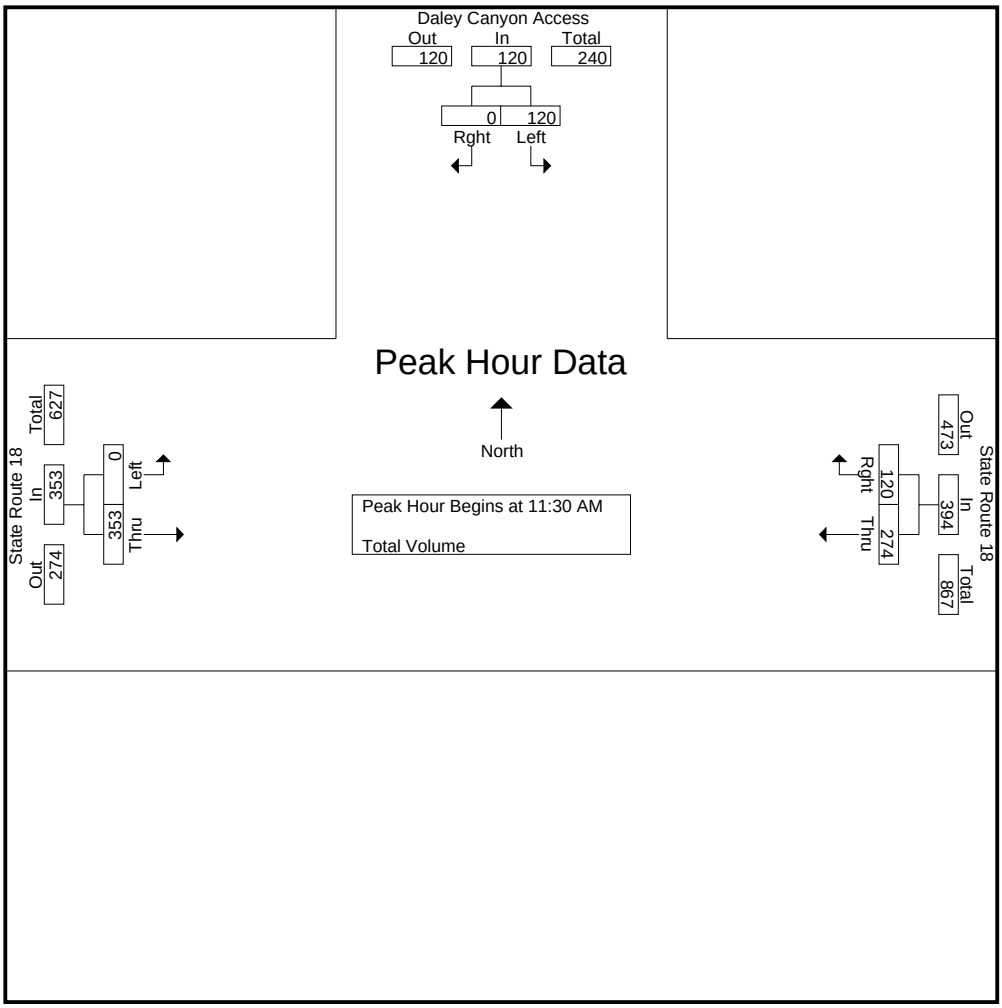

Peak Hour Analysis From 10:30 AM to 12:15 PM - Peak 1 of 1
Peak Hour for Each Approach Begins at:

	11:30 AM			11:30 AM			11:15 AM		
+0 mins.	22	0	22	69	29	98	0	84	84
+15 mins.	**38**	0	**38**	67	30	97	0	90	90
+30 mins.	22	0	22	68	**33**	**101**	0	91	91
+45 mins.	38	0	38	**70**	28	98	0	**97**	**97**
Total Volume	120	0	120	274	120	394	0	362	362
% App. Total	100	0		69.5	30.5		0	100	
PHF	.789	.000	.789	.979	.909	.975	.000	.933	.933

Counts Unlimited Inc.
25424 Jaclyn Avenue
Moreno Valley, CA 92557
(951) 247-6716

County of San Bernardino
N/S: Daley Canyon Access
E/W: State Route 18
Weather: Sunnyq

File Name : CSBDCA18SUN
Site Code : 00313165
Start Date : 3/25/2007
Page No : 1

Groups Printed- Total Volume

	Daley Canyon Access Southbound			State Route 18 Westbound			State Route 18 Eastbound			
Start Time	Left	Right	App. Total	Thru	Right	App. Total	Left	Thru	App. Total	Int. Total
09:30 AM	18	0	18	45	15	60	0	31	31	109
09:45 AM	19	0	19	44	20	64	0	61	61	144
Total	37	0	37	89	35	124	0	92	92	253
10:00 AM	11	0	11	64	49	113	0	40	40	164
10:15 AM	32	0	32	50	12	62	1	59	60	154
10:30 AM	36	0	36	66	23	89	0	50	50	175
10:45 AM	49	0	49	54	26	80	2	62	64	193
Total	128	0	128	234	110	344	3	211	214	686
11:00 AM	38	0	38	47	13	60	2	54	56	154
11:15 AM	15	0	15	65	18	83	1	45	46	144
Grand Total	218	0	218	435	176	611	6	402	408	1237
Apprch %	100	0		71.2	28.8		1.5	98.5		
Total %	17.6	0	17.6	35.2	14.2	49.4	0.5	32.5	33	

	Daley Canyon Access Southbound			State Route 18 Westbound			State Route 18 Eastbound			
Start Time	Left	Right	App. Total	Thru	Right	App. Total	Left	Thru	App. Total	Int. Total
Peak Hour Analysis From 09:30 AM to 11:15 AM - Peak 1 of 1										
Peak Hour for Entire Intersection Begins at 10:00 AM										
10:00 AM	11	0	11	64	49	113	0	40	40	164
10:15 AM	32	0	32	50	12	62	1	59	60	154
10:30 AM	36	0	36	66	23	89	0	50	50	175
10:45 AM	49	0	49	54	26	80	2	62	64	193
Total Volume	128	0	128	234	110	344	3	211	214	686
% App. Total	100	0		68	32		1.4	98.6		
PHF	.653	.000	.653	.886	.561	.761	.375	.851	.836	.889

Counts Unlimited Inc.
25424 Jaclyn Avenue
Moreno Valley, CA 92557
(951) 247-6716

County of San Bernardino
N/S: Daley Canyon Access
E/W: State Route 18
Weather: Sunnyq

File Name : CSBDCA18SUN
Site Code : 00313165
Start Date : 3/25/2007
Page No : 2

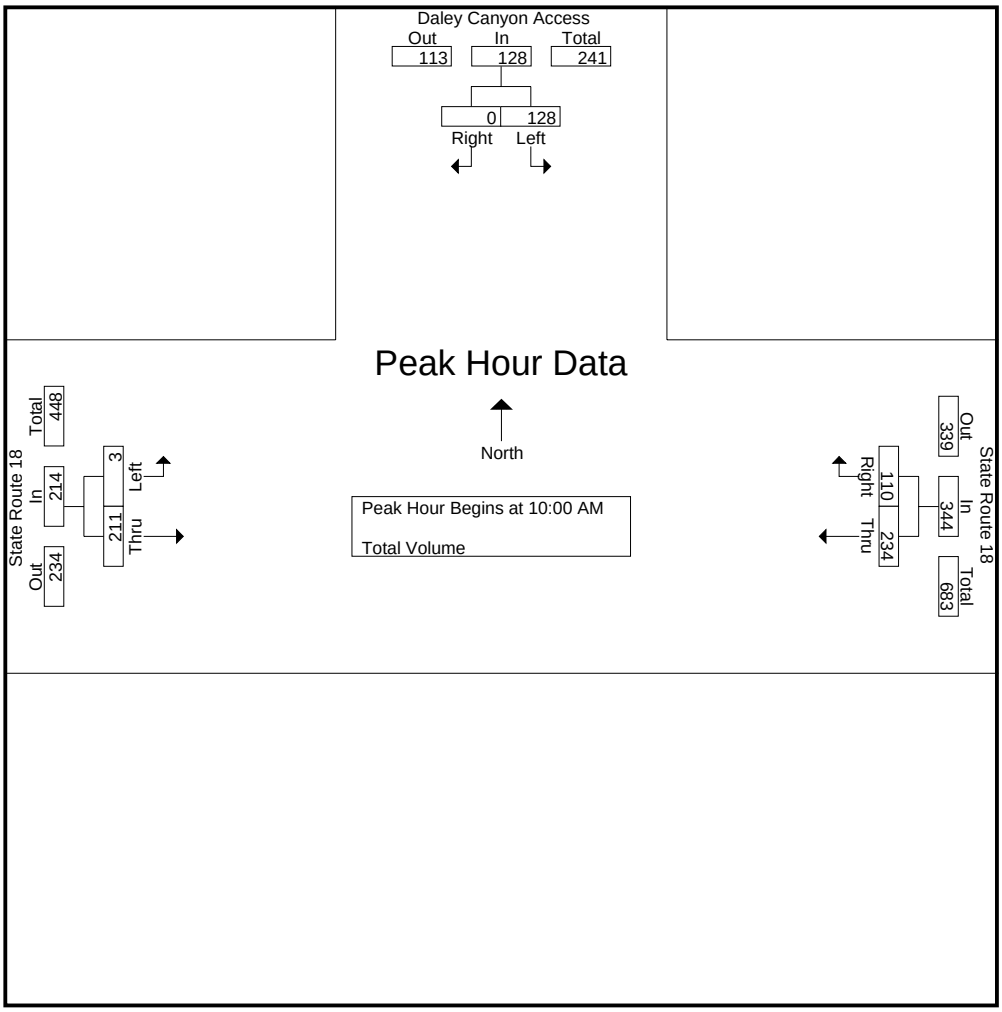

Peak Hour Analysis From 09:30 AM to 11:15 AM - Peak 1 of 1

Peak Hour for Each Approach Begins at:

	10:15 AM			10:00 AM			10:15 AM		
+0 mins.	32	0	32	64	49	113	1	59	60
+15 mins.	36	0	36	50	12	62	0	50	50
+30 mins.	49	0	49	66	23	89	2	62	64
+45 mins.	38	0	38	54	26	80	2	54	56
Total Volume	155	0	155	234	110	344	5	225	230
% App. Total	100	0		68	32		2.2	97.8	
PHF	.791	.000	.791	.886	.561	.761	.625	.907	.898

Counts Unlimited, Inc.
25424 Jaclyn Avenue
Moreno Valley, CA 92557
(951) 247-6716

County of San Bernardino
N/S: State Route 173
E/W: State Route 18
Weather: Sunny

File Name : CSB17318SAT
Site Code : 00313187
Start Date : 3/24/2007
Page No : 1

Groups Printed- Total Volume

	State Route 173 Southbound			State Route 18 Westbound			State Route 18 Eastbound			
Start Time	Left	Right	App. Total	Thru	Right	App. Total	Left	Thru	App. Total	Int. Total
10:30 AM	12	27	39	31	11	42	44	58	102	183
10:45 AM	16	13	29	51	7	58	37	49	86	173
Total	28	40	68	82	18	100	81	107	188	356
11:00 AM	15	14	29	41	18	59	49	75	124	212
11:15 AM	13	11	24	44	11	55	27	54	81	160
11:30 AM	14	25	39	49	14	63	46	57	103	205
11:45 AM	11	31	42	47	20	67	35	61	96	205
Total	53	81	134	181	63	244	157	247	404	782
12:00 PM	25	32	57	51	21	72	72	58	130	259
12:15 PM	17	24	41	52	16	68	41	54	95	204
Grand Total	123	177	300	366	118	484	351	466	817	1601
Apprch %	41	59		75.6	24.4		43	57		
Total %	7.7	11.1	18.7	22.9	7.4	30.2	21.9	29.1	51	

No SB left/No WB Right allowed

	State Route 173 Southbound			State Route 18 Westbound			State Route 18 Eastbound			
Start Time	Left	Right	App. Total	Thru	Right	App. Total	Left	Thru	App. Total	Int. Total
Peak Hour Analysis From 10:30 AM to 12:15 PM - Peak 1 of 1										
Peak Hour for Entire Intersection Begins at 11:30 AM										
11:30 AM	14	25	39	49	14	63	46	57	103	205
11:45 AM	11	31	42	47	20	67	35	**61**	96	205
12:00 PM	**25**	**32**	**57**	51	**21**	**72**	**72**	58	**130**	**259**
12:15 PM	17	24	41	**52**	16	68	41	54	95	204
Total Volume	67	112	179	199	71	270	194	230	424	873
% App. Total	37.4	62.6		73.7	26.3		45.8	54.2		
PHF	.670	.875	.785	.957	.845	.938	.674	.943	.815	.843

Counts Unlimited, Inc.
25424 Jaclyn Avenue
Moreno Valley, CA 92557
(951) 247-6716

County of San Bernardino
N/S: State Route 173
E/W: State Route 18
Weather: Sunny

File Name : CSB17318SAT
Site Code : 00313187
Start Date : 3/24/2007
Page No : 2

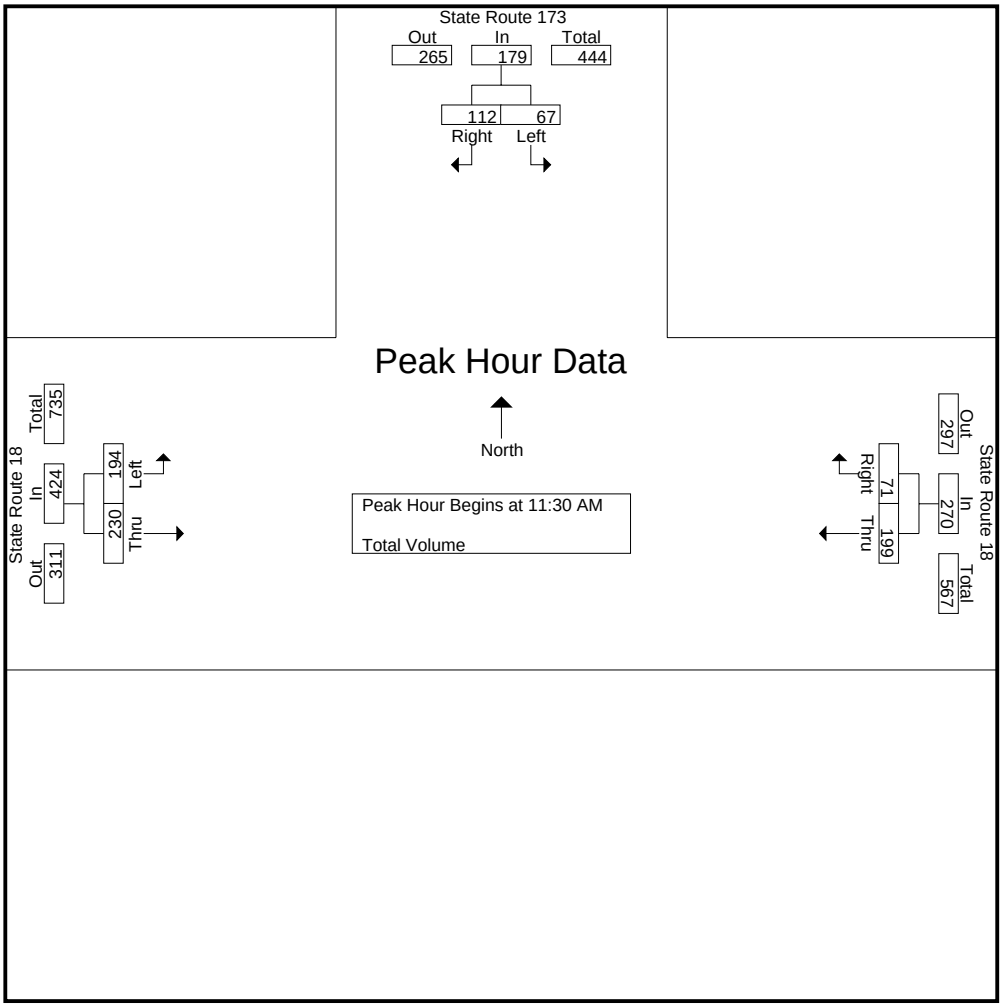

Peak Hour Analysis From 10:30 AM to 12:15 PM - Peak 1 of 1

Peak Hour for Each Approach Begins at:

	11:30 AM			11:30 AM			11:30 AM		
+0 mins.	14	25	39	49	14	63	46	57	103
+15 mins.	11	31	42	47	20	67	35	**61**	96
+30 mins.	**25**	**32**	**57**	51	**21**	**72**	**72**	58	**130**
+45 mins.	17	24	41	**52**	16	68	41	54	95
Total Volume	67	112	179	199	71	270	194	230	424
% App. Total	37.4	62.6		73.7	26.3		45.8	54.2	
PHF	.670	.875	.785	.957	.845	.938	.674	.943	.815

Counts Unlimited Inc.
25424 Jaclyn Avenue
Moreno Valley, CA 92557
951-247-6716

County of San Bernardino
N/S: State Route 173
E/W: State Route 18
Weather: Sunny

File Name : CSB17318SUN
Site Code : 00313144
Start Date : 4/1/2007
Page No : 1

Groups Printed- Total Volume

	State Route 173 Southbound			State Route 18 Westbound			State Route 18 Eastbound			
Start Time	Left	Right	App. Total	Thru	Right	App. Total	Left	Thru	App. Total	Int. Total
09:30 AM	7	18	25	35	14	49	26	28	54	128
09:45 AM	8	15	23	34	18	52	36	22	58	133
Total	15	33	48	69	32	101	62	50	112	261
10:00 AM	5	25	30	22	12	34	23	32	55	119
10:15 AM	10	18	28	33	20	53	50	34	84	165
10:30 AM	4	29	33	28	13	41	33	29	62	136
10:45 AM	8	36	44	34	32	66	33	34	67	177
Total	27	108	135	117	77	194	139	129	268	597
11:00 AM	14	26	40	37	27	64	28	27	55	159
11:15 AM	14	26	40	25	12	37	25	35	60	137
Grand Total	70	193	263	248	148	396	254	241	495	1154
Apprch %	26.6	73.4		62.6	37.4		51.3	48.7		
Total %	6.1	16.7	22.8	21.5	12.8	34.3	22	20.9	42.9	

	State Route 173 Southbound			State Route 18 Westbound			State Route 18 Eastbound			
Start Time	Left	Right	App. Total	Thru	Right	App. Total	Left	Thru	App. Total	Int. Total
Peak Hour Analysis From 09:30 AM to 11:15 AM - Peak 1 of 1										
Peak Hour for Entire Intersection Begins at 10:15 AM										
10:15 AM	10	18	28	33	20	53	**50**	**34**	**84**	165
10:30 AM	4	29	33	28	13	41	33	29	62	136
10:45 AM	8	**36**	**44**	34	**32**	**66**	33	34	67	**177**
11:00 AM	**14**	26	40	**37**	27	64	28	27	55	159
Total Volume	36	109	145	132	92	224	144	124	268	637
% App. Total	24.8	75.2		58.9	41.1		53.7	46.3		
PHF	.643	.757	.824	.892	.719	.848	.720	.912	.798	.900

Counts Unlimited Inc.
25424 Jaclyn Avenue
Moreno Valley, CA 92557
951-247-6716

County of San Bernardino
N/S: State Route 173
E/W: State Route 18
Weather: Sunny

File Name : CSB17318SUN
Site Code : 00313144
Start Date : 4/1/2007
Page No : 2

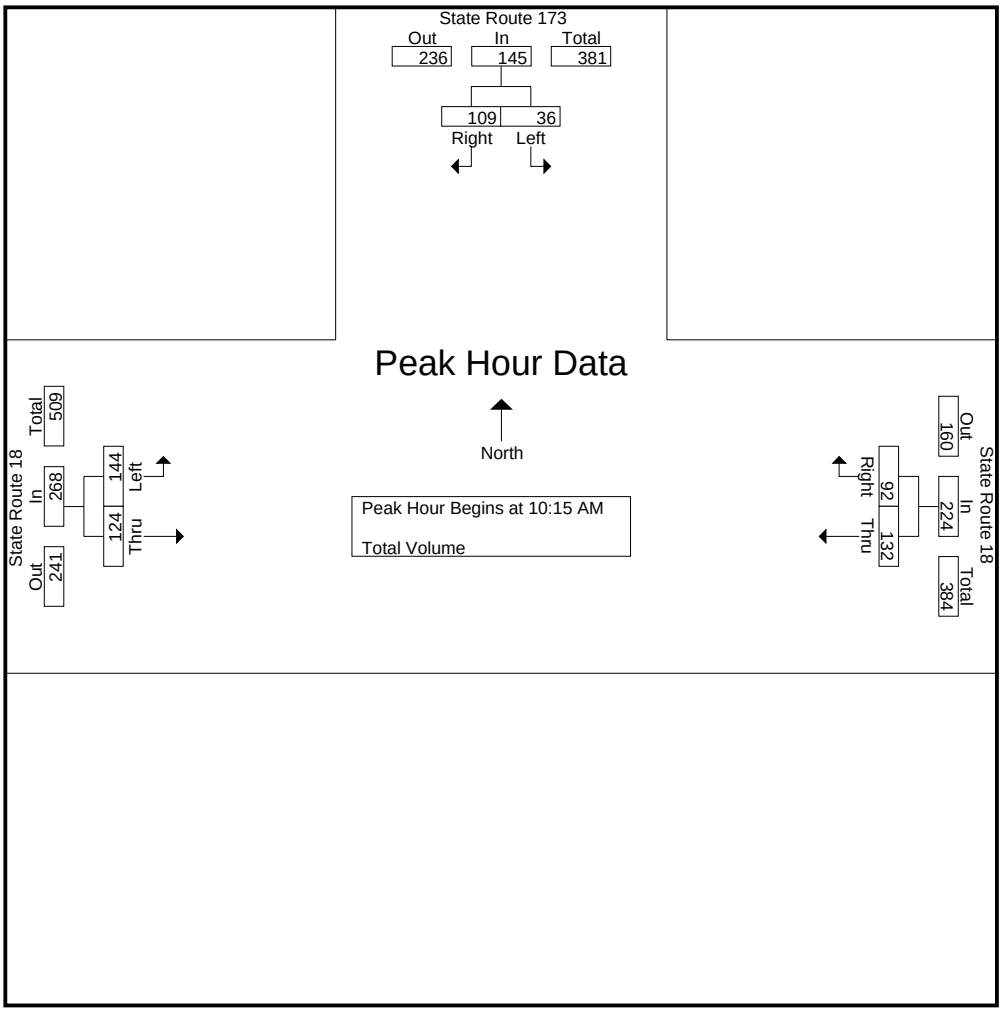

Peak Hour Analysis From 09:30 AM to 11:15 AM - Peak 1 of 1

Peak Hour for Each Approach Begins at:

	10:30 AM			10:15 AM			10:00 AM		
+0 mins.	4	29	33	33	20	53	23	32	55
+15 mins.	8	**36**	**44**	28	13	41	**50**	**34**	**84**
+30 mins.	**14**	26	40	34	**32**	**66**	33	29	62
+45 mins.	14	26	40	**37**	27	64	33	34	67
Total Volume	40	117	157	132	92	224	139	129	268
% App. Total	25.5	74.5		58.9	41.1		51.9	48.1	
PHF	.714	.813	.892	.892	.719	.848	.695	.949	.798

APPENDIX B

VOLUME DEVELOPMENT WORKSHEETS

Table B-1
Existing (2007) Peak Hour Volumes (Vehicle Classification Counts)

	Sat. Peak Hour							Sun. Peak Hour						
	Passenger Vehicles	Trucks 2 Axle	Trucks 3 Axle	Trucks 4+ Axle	Trucks PCE	Avg. PCE	Total PCE Volume	Passenger Vehicles	Trucks 2 Axle	Trucks 3 Axle	Trucks 4+ Axle	Trucks PCE	Avg. PCE	Total PCE Volume
4 Daley Canyon Road/SR-189														
NBL	118	1	0	0	2		120	68	1	0	0	2		70
NBT	249	4	0	1	9		258	118	1	0	1	5		123
NBR	0	0	0	0	0		0	0	0	0	0	0		0
SBL	0	0	0	0	0		0	0	0	0	0	0		0
SBT	189	2	0	0	3		192	205	3	0	0	5		210
SBR	57	1	0	0	2		59	31	0	0	0	0		31
EBL	239	2	1	0	5		244	144	1	0	0	2		146
EBT	0	0	0	0	0		0	0	0	0	0	0		0
EBR	141	3	0	0	5		146	146	1	0	0	2		148
WBL	0	0	0	0	0		0	0	0	0	0	0		0
WBT	0	0	0	0	0		0	0	0	0	0	0		0
WBR	0	0	0	0	0		0	0	0	0	0	0		0
North Leg														
Approach	246	3	0	0	5		251	236	3	0	0	5		241
Departure	488	6	1	1	14		502	262	2	0	1	6		269
Total	734	9	1	1	19	1.7	753	498	5	0	1	11	1.8	510
South Leg														
Approach	367	5	0	1	11		378	186	2	0	1	6		193
Departure	330	5	0	0	8		338	351	4	0	0	6		358
Total	697	10	0	1	18	1.6	716	537	6	0	1	12	1.7	551
East Leg														
Approach	0	0	0	0	0		0	0	0	0	0	0		0
Departure	0	0	0	0	0		0	0	0	0	0	0		0
Total	0	0	0	0	0	0.0	0	0	0	0	0	0	0.0	0
West Leg														
Approach	380	5	1	0	10		390	290	2	0	0	3		294
Departure	175	2	0	0	3		179	99	1	0	0	2		101
Total	555	7	1	0	13	1.6	569	389	3	0	0	5	1.5	395
Total Approaches														
Approach	993	13	1	1	25		1,019	712	7	0	1	14		728
Departure	993	13	1	1	25		1,019	712	7	0	1	14		728
Total	1,986	26	2	2	49	1.6	2,038	1,424	14	0	2	27	1.7	1,456

Table B-1
Existing (2007) Peak Hour Volumes (Vehicle Classification Counts)

	Sat. Peak Hour							Sun. Peak Hour						
	Passenger Vehicles	Trucks 2 Axle	Trucks 3 Axle	Trucks 4+ Axle	Trucks PCE	Avg. PCE	Total PCE Volume	Passenger Vehicles	Trucks 2 Axle	Trucks 3 Axle	Trucks 4+ Axle	Trucks PCE	Avg. PCE	Total PCE Volume
7 Lake Gregory Drive/SR-18														
NBL	0	0	0	0	0		0	0	0	0	0	0		0
NBT	0	0	0	0	0		0	0	0	0	0	0		0
NBR	0	0	0	0	0		0	0	0	0	0	0		0
SBL	195	2	0	0	3		198	114	1	0	0	2		116
SBT	0	0	0	0	0		0	0	0	0	0	0		0
SBR	69	1	0	0	2		71	124	3	0	0	5		129
EBL	86	3	0	0	5		91	45	1	0	0	2		47
EBT	311	5	1	2	16		327	180	3	0	0	5		185
EBR	0	0	0	0	0		0	0	0	0	0	0		0
WBL	0	0	0	0	0		0	0	0	0	0	0		0
WBT	280	5	1	1	13		293	324	5	0	0	8		332
WBR	108	4	2	1	13		121	84	2	0	0	3		87
North Leg														
Approach	264	3	0	0	5		269	238	4	0	0	6		245
Departure	194	7	2	1	18		212	129	3	0	0	5		134
Total	458	10	2	1	22	1.7	481	367	7	0	0	11	1.5	379
South Leg														
Approach	0	0	0	0	0		0	0	0	0	0	0		0
Departure	0	0	0	0	0		0	0	0	0	0	0		0
Total	0	0	0	0	0	0.0	0	0	0	0	0	0	0.0	0
East Leg														
Approach	388	9	3	2	26		414	408	7	0	0	11		419
Departure	506	7	1	2	19		525	294	4	0	0	6		301
Total	894	16	4	4	44	1.8	939	702	11	0	0	17	1.5	720
West Leg														
Approach	397	8	1	2	20		418	225	4	0	0	6		232
Departure	349	6	1	1	14		364	448	8	0	0	12		461
Total	746	14	2	3	34	1.8	782	673	12	0	0	18	1.5	693
Total Approaches														
Approach	1,049	20	4	4	50		1,101	871	15	0	0	23		896
Departure	1,049	20	4	4	50		1,101	871	15	0	0	23		896
Total	2,098	40	8	8	100	1.8	2,202	1,742	30	0	0	45	1.5	1,792

Table B-1
Existing (2007) Peak Hour Volumes (Vehicle Classification Counts)

	Sat. Peak Hour							Sun. Peak Hour						
	Passenger Vehicles	Trucks 2 Axle	Trucks 3 Axle	Trucks 4+ Axle	Trucks PCE	Avg. PCE	Total PCE Volume	Passenger Vehicles	Trucks 2 Axle	Trucks 3 Axle	Trucks 4+ Axle	Trucks PCE	Avg. PCE	Total PCE Volume
10 Daley Canyon Road/SR-18														
NBL	0	0	0	0	0		0	0	0	0	0	0		0
NBT	0	0	0	0	0		0	0	0	0	0	0		0
NBR	0	0	0	0	0		0	0	0	0	0	0		0
SBL	0	0	0	0	0		0	2	0	0	0	0		2
SBT	0	0	0	0	0		0	0	0	0	0	0		0
SBR	219	3	0	0	5		224	224	2	0	0	3		227
EBL	240	1	0	0	2		242	125	3	0	1	8		133
EBT	362	3	1	1	10		372	210	2	0	0	3		213
EBR	0	0	0	0	0		0	0	0	0	0	0		0
WBL	0	0	0	0	0		0	0	0	0	0	0		0
WBT	253	6	1	0	11		264	226	3	0	1	8		234
WBR	0	0	0	0	0		0	1	0	0	0	0		1
North Leg														
Approach	219	3	0	0	5		224	226	2	0	0	3		229
Departure	240	1	0	0	2		242	126	3	0	1	8		134
Total	459	4	0	0	6	1.5	466	352	5	0	1	11	1.8	363
South Leg														
Approach	0	0	0	0	0		0	0	0	0	0	0		0
Departure	0	0	0	0	0		0	0	0	0	0	0		0
Total	0	0	0	0	0	0.0	0	0	0	0	0	0	0.0	0
East Leg														
Approach	253	6	1	0	11		264	227	3	0	1	8		235
Departure	362	3	1	1	10		372	212	2	0	0	3		215
Total	615	9	2	1	21	1.7	636	439	5	0	1	11	1.8	450
West Leg														
Approach	602	4	1	1	11		614	335	5	0	1	11		346
Departure	472	9	1	0	16		488	450	5	0	1	11		461
Total	1,074	13	2	1	27	1.7	1,102	785	10	0	2	21	1.8	807
Total Approaches														
Approach	1,074	13	2	1	27		1,102	788	10	0	2	21		810
Departure	1,074	13	2	1	27		1,102	788	10	0	2	21		810
Total	2,148	26	4	2	53	1.7	2,204	1,576	20	0	4	42	1.8	1,620

Table B-2
Existing (2007) Peak Hour Truck Percentages

	Sat. Peak Hour				Sun. Peak Hour			
	Passenger Vehicles	Total Trucks	Total Vehicle Volume	Truck %	Passenger Vehicles	Total Trucks	Total Vehicle Volume	Truck %
4 Daley Canyon Road/SR-189								
NBL	118	1	119		68	1	69	
NBT	249	5	254		118	2	120	
NBR	0	0	0		0	0	0	
SBL	0	0	0		0	0	0	
SBT	189	2	191		205	3	208	
SBR	57	1	58		31	0	31	
EBL	239	3	242		144	1	145	
EBT	0	0	0		0	0	0	
EBR	141	3	144		146	1	147	
WBL	0	0	0		0	0	0	
WBT	0	0	0		0	0	0	
WBR	0	0	0		0	0	0	
North Leg								
Approach	246	3	249		236	3	239	
Departure	488	8	496		262	3	265	
Total	734	11	745	1.5%	498	6	504	1.2%
South Leg								
Approach	367	6	373		186	3	189	
Departure	330	5	335		351	4	355	
Total	697	11	708	1.6%	537	7	544	1.3%
East Leg								
Approach	0	0	0		0	0	0	
Departure	0	0	0		0	0	0	
Total	0	0	0	0.0%	0	0	0	0.0%
West Leg								
Approach	380	6	386		290	2	292	
Departure	175	2	177		99	1	100	
Total	555	8	563	1.4%	389	3	392	0.8%
Total Approaches								
Approach	993	15	1,008		712	8	720	
Departure	993	15	1,008		712	8	720	
Total	1,986	30	2,016	1.5%	1,424	16	1,440	1.1%

Table B-2
Existing (2007) Peak Hour Truck Percentages

	Sat. Peak Hour				Sun. Peak Hour			
	Passenger Vehicles	Total Trucks	Total Vehicle Volume	Truck %	Passenger Vehicles	Total Trucks	Total Vehicle Volume	Truck %
7 Lake Gregory Drive/SR-18								
NBL	0	0	0		0	0	0	
NBT	0	0	0		0	0	0	
NBR	0	0	0		0	0	0	
SBL	195	2	197		114	1	115	
SBT	0	0	0		0	0	0	
SBR	69	1	70		124	3	127	
EBL	86	3	89		45	1	46	
EBT	311	8	319		180	3	183	
EBR	0	0	0		0	0	0	
WBL	0	0	0		0	0	0	
WBT	280	7	287		324	5	329	
WBR	108	7	115		84	2	86	
North Leg								
Approach	264	3	267		238	4	242	
Departure	194	10	204		129	3	132	
Total	458	13	471	2.8%	367	7	374	1.9%
South Leg								
Approach	0	0	0		0	0	0	
Departure	0	0	0		0	0	0	
Total	0	0	0	0.0%	0	0	0	0.0%
East Leg								
Approach	388	14	402		408	7	415	
Departure	506	10	516		294	4	298	
Total	894	24	918	2.6%	702	11	713	1.5%
West Leg								
Approach	397	11	408		225	4	229	
Departure	349	8	357		448	8	456	
Total	746	19	765	2.5%	673	12	685	1.8%
Total Approaches								
Approach	1,049	28	1,077		871	15	886	
Departure	1,049	28	1,077		871	15	886	
Total	2,098	56	2,154	2.6%	1,742	30	1,772	1.7%

Table B-2
Existing (2007) Peak Hour Truck Percentages

	Sat. Peak Hour				Sun. Peak Hour			
	Passenger Vehicles	Total Trucks	Total Vehicle Volume	Truck %	Passenger Vehicles	Total Trucks	Total Vehicle Volume	Truck %
10 Daley Canyon Road/SR-18								
NBL	0	0	0		0	0	0	
NBT	0	0	0		0	0	0	
NBR	0	0	0		0	0	0	
SBL	0	0	0		2	0	2	
SBT	0	0	0		0	0	0	
SBR	219	3	222		224	2	226	
EBL	240	1	241		125	4	129	
EBT	362	5	367		210	2	212	
EBR	0	0	0		0	0	0	
WBL	0	0	0		0	0	0	
WBT	253	7	260		226	4	230	
WBR	0	0	0		1	0	1	
North Leg								
Approach	219	3	222		226	2	228	
Departure	240	1	241		126	4	130	
Total	459	4	463	0.9%	352	6	358	1.7%
South Leg								
Approach	0	0	0		0	0	0	
Departure	0	0	0		0	0	0	
Total	0	0	0	0.0%	0	0	0	0.0%
East Leg								
Approach	253	7	260		227	4	231	
Departure	362	5	367		212	2	214	
Total	615	12	627	1.9%	439	6	445	1.3%
West Leg								
Approach	602	6	608		335	6	341	
Departure	472	10	482		450	6	456	
Total	1,074	16	1,090	1.5%	785	12	797	1.5%
Total Approaches								
Approach	1,074	16	1,090		788	12	800	
Departure	1,074	16	1,090		788	12	800	
Total	2,148	32	2,180	1.5%	1,576	24	1,600	1.5%

Table B-3
Existing (2007) Peak Hour Volumes (Intersections Without Classification Counts)

	Sat. Peak Hour							Sun. Peak Hour						
	Total Vehicles	Truck %	Pass. Veh.	Truck	Avg. PCE	Total Truck PCE	Total PCE Volume	Total Vehicles	Truck %	Pass. Veh.	Truck	Avg. PCE	Total Truck PCE	Total PCE Volume
1 North Road/SR-189														
NBL	0	2.8%	0	0	1.7	0	0	0	1.9%	0	0	1.5	0	0
NBT	0	2.8%	0	0	1.7	0	0	0	1.9%	0	0	1.5	0	0
NBR	0	2.8%	0	0	1.7	0	0	0	1.9%	0	0	1.5	0	0
SBL	127	2.8%	123	4	1.7	6	129	68	1.9%	67	1	1.5	2	69
SBT	0	2.8%	0	0	1.7	0	0	0	1.9%	0	0	1.5	0	0
SBR	38	2.8%	37	1	1.7	2	39	40	1.9%	39	1	1.5	1	40
EBL	28	2.8%	27	1	1.7	1	29	28	1.9%	27	1	1.5	1	28
EBT	127	2.8%	123	4	1.7	6	129	62	1.9%	61	1	1.5	2	63
EBR	0	2.8%	0	0	1.7	0	0	0	1.9%	0	0	1.5	0	0
WBL	0	2.8%	0	0	1.7	0	0	0	1.9%	0	0	1.5	0	0
WBT	119	2.8%	116	3	1.7	6	121	115	1.9%	113	2	1.5	3	116
WBR	105	2.8%	102	3	1.7	5	107	59	1.9%	58	1	1.5	2	60
North Leg														
Approach	165		160	5		8	168	108		106	2		3	109
Departure	133		129	4		6	136	87		85	2		2	88
Total	298		290	8		14	304	195		191	4		5	197
South Leg														
Approach	0		0	0		0	0	0		0	0		0	0
Departure	0		0	0		0	0	0		0	0		0	0
Total	0		0	0		0	0	0		0	0		0	0
East Leg														
Approach	224		218	6		11	228	174		171	3		5	176
Departure	254		247	7		12	258	130		128	2		4	132
Total	478		465	13		22	486	304		298	6		9	308
West Leg														
Approach	155		151	4		7	158	90		88	2		3	91
Departure	157		153	4		7	160	155		152	3		4	156
Total	312		303	9		15	318	245		240	5		7	247
Total Approaches														
Approach	544		529	15		26	554	372		365	7		10	376
Departure	544		529	15		26	554	372		365	7		10	376
Total	1,088		1,058	30		51	1,108	744		730	14		21	752

Table B-3
Existing (2007) Peak Hour Volumes (Intersections Without Classification Counts)

	Sat. Peak Hour							Sun. Peak Hour						
	Total Vehicles	Truck %	Pass. Veh.	Truck	Avg. PCE	Total Truck PCE	Total PCE Volume	Total Vehicles	Truck %	Pass. Veh.	Truck	Avg. PCE	Total Truck PCE	Total PCE Volume
2 Bear Springs Road/SR-189														
NBL	16	2.8%	16	0	1.7	1	16	9	1.9%	9	0	1.5	0	9
NBT	10	2.8%	10	0	1.7	0	10	10	1.9%	10	0	1.5	0	10
NBR	11	2.8%	11	0	1.7	1	11	7	1.9%	7	0	1.5	0	7
SBL	26	2.8%	25	1	1.7	1	27	26	1.9%	26	0	1.5	1	26
SBT	8	2.8%	8	0	1.7	0	8	8	1.9%	8	0	1.5	0	8
SBR	46	2.8%	45	1	1.7	2	47	45	1.9%	44	1	1.5	1	45
EBL	49	2.8%	48	1	1.7	2	50	32	1.9%	31	1	1.5	1	32
EBT	168	2.8%	163	5	1.7	8	171	112	1.9%	110	2	1.5	3	113
EBR	25	2.8%	24	1	1.7	1	25	16	1.9%	16	0	1.5	0	16
WBL	8	2.8%	8	0	1.7	0	8	9	1.9%	9	0	1.5	0	9
WBT	163	2.8%	159	4	1.7	8	166	139	1.9%	136	3	1.5	4	140
WBR	25	2.8%	24	1	1.7	1	25	14	1.9%	14	0	1.5	0	14
North Leg														
Approach	80		78	2		4	82	79		78	1		2	79
Departure	84		82	2		4	85	56		55	1		2	56
Total	164		159	5		8	167	135		132	3		4	135
South Leg														
Approach	37		36	1		2	37	26		26	0		1	26
Departure	41		40	1		2	41	33		32	1		1	33
Total	78		76	2		4	78	59		58	1		2	59
East Leg														
Approach	196		191	5		9	199	162		159	3		5	163
Departure	205		199	6		10	209	145		142	3		4	146
Total	401		390	11		19	408	307		301	6		9	309
West Leg														
Approach	242		235	7		11	246	160		157	3		4	161
Departure	225		219	6		11	229	193		189	4		5	194
Total	467		454	13		22	475	353		346	7		10	355
Total Approaches														
Approach	555		540	15		26	564	427		419	8		12	429
Departure	555		540	15		26	564	427		419	8		12	429
Total	1,110		1,079	31		52	1,128	854		838	16		24	858

Table B-3
Existing (2007) Peak Hour Volumes (Intersections Without Classification Counts)

	Sat. Peak Hour							Sun. Peak Hour						
	Total Vehicles	Truck %	Pass. Veh.	Truck	Avg. PCE	Total Truck PCE	Total PCE Volume	Total Vehicles	Truck %	Pass. Veh.	Truck	Avg. PCE	Total Truck PCE	Total PCE Volume
3 Grass Valley Road/SR-189														
NBL	0	1.4%	0	0	1.6	0	0	0	0.8%	0	0	1.5	0	0
NBT	0	1.4%	0	0	1.6	0	0	0	0.8%	0	0	1.5	0	0
NBR	0	1.4%	0	0	1.6	0	0	0	0.8%	0	0	1.5	0	0
SBL	202	1.4%	199	3	1.6	5	204	181	0.8%	180	1	1.5	2	182
SBT	0	1.4%	0	0	1.6	0	0	0	0.8%	0	0	1.5	0	0
SBR	183	1.4%	180	3	1.6	4	185	125	0.8%	124	1	1.5	1	125
EBL	90	1.4%	89	1	1.6	2	91	51	0.8%	51	0	1.5	1	51
EBT	163	1.4%	161	2	1.6	4	164	124	0.8%	123	1	1.5	1	124
EBR	0	1.4%	0	0	1.6	0	0	0	0.8%	0	0	1.5	0	0
WBL	0	1.4%	0	0	1.6	0	0	0	0.8%	0	0	1.5	0	0
WBT	66	1.4%	65	1	1.6	2	67	42	0.8%	42	0	1.5	0	42
WBR	113	1.4%	111	2	1.6	3	114	67	0.8%	66	1	1.5	1	67
North Leg														
Approach	385		380	5		9	389	306		304	2		4	307
Departure	203		200	3		5	205	118		117	1		1	118
Total	588		580	8		13	594	424		421	3		5	425
South Leg														
Approach	0		0	0		0	0	0		0	0		0	0
Departure	0		0	0		0	0	0		0	0		0	0
Total	0		0	0		0	0	0		0	0		0	0
East Leg														
Approach	179		176	3		4	181	109		108	1		1	109
Departure	365		360	5		8	368	305		303	2		4	306
Total	544		536	8		12	549	414		411	3		5	415
West Leg														
Approach	253		249	4		6	255	175		174	1		2	175
Departure	249		245	4		6	252	167		166	1		2	167
Total	502		495	7		11	507	342		339	3		4	342
Total Approaches														
Approach	817		805	12		19	825	590		585	5		7	591
Departure	817		805	12		19	825	590		585	5		7	591
Total	1,634		1,611	23		37	1,650	1,180		1,171	9		14	1,182

Table B-3
Existing (2007) Peak Hour Volumes (Intersections Without Classification Counts)

	Sat. Peak Hour							Sun. Peak Hour						
	Total Vehicles	Truck %	Pass. Veh.	Truck	Avg. PCE	Total Truck PCE	Total PCE Volume	Total Vehicles	Truck %	Pass. Veh.	Truck	Avg. PCE	Total Truck PCE	Total PCE Volume
5 North Bay Road/SR-189														
NBL	0	1.5%	0	0	1.7	0	0	0	1.2%	0	0	1.8	0	0
NBT	0	1.5%	0	0	1.7	0	0	0	1.2%	0	0	1.8	0	0
NBR	0	1.5%	0	0	1.7	0	0	0	1.2%	0	0	1.8	0	0
SBL	105	1.5%	103	2	1.7	3	106	56	1.2%	55	1	1.8	1	57
SBT	0	1.5%	0	0	1.7	0	0	0	1.2%	0	0	1.8	0	0
SBR	209	1.5%	206	3	1.7	5	211	183	1.2%	181	2	1.8	4	185
EBL	222	1.5%	219	3	1.7	6	224	131	1.2%	129	2	1.8	3	132
EBT	244	1.5%	240	4	1.7	6	247	150	1.2%	148	2	1.8	3	151
EBR	0	1.5%	0	0	1.7	0	0	0	1.2%	0	0	1.8	0	0
WBL	0	1.5%	0	0	1.7	0	0	0	1.2%	0	0	1.8	0	0
WBT	168	1.5%	166	2	1.7	4	170	147	1.2%	145	2	1.8	3	148
WBR	79	1.5%	78	1	1.7	2	80	61	1.2%	60	1	1.8	1	62
North Leg														
Approach	314		309	5		8	317	239		236	3		5	242
Departure	301		297	4		8	304	192		190	2		4	194
Total	615		606	9		15	621	431		426	5		9	436
South Leg														
Approach	0		0	0		0	0	0		0	0		0	0
Departure	0		0	0		0	0	0		0	0		0	0
Total	0		0	0		0	0	0		0	0		0	0
East Leg														
Approach	247		243	4		6	250	208		206	2		4	210
Departure	349		344	5		9	353	206		204	2		4	208
Total	596		587	9		15	603	414		409	5		9	418
West Leg														
Approach	466		459	7		12	471	281		278	3		6	283
Departure	377		371	6		9	381	330		326	4		7	333
Total	843		831	12		21	852	611		604	7		13	616
Total Approaches														
Approach	1,027		1,012	15		26	1,038	728		719	9		16	735
Departure	1,027		1,012	15		26	1,038	728		719	9		16	735
Total	2,054		2,024	30		52	2,076	1,456		1,439	17		31	1,470

Table B-3
Existing (2007) Peak Hour Volumes (Intersections Without Classification Counts)

	Sat. Peak Hour							Sun. Peak Hour						
	Total Vehicles	Truck %	Pass. Veh.	Truck	Avg. PCE	Total Truck PCE	Total PCE Volume	Total Vehicles	Truck %	Pass. Veh.	Truck	Avg. PCE	Total Truck PCE	Total PCE Volume
6 Lake Gregory Drive/SR-189														
NBL	0	2.8%	0	0	1.7	0	0	0	1.9%	0	0	1.5	0	0
NBT	153	2.8%	149	4	1.7	7	156	92	1.9%	90	2	1.5	3	93
NBR	52	2.8%	51	1	1.7	2	53	31	1.9%	30	1	1.5	1	31
SBL	78	2.8%	76	2	1.7	4	80	51	1.9%	50	1	1.5	1	51
SBT	210	2.8%	204	6	1.7	10	214	109	1.9%	107	2	1.5	3	110
SBR	0	2.8%	0	0	1.7	0	0	0	1.9%	0	0	1.5	0	0
EBL	0	2.8%	0	0	1.7	0	0	0	1.9%	0	0	1.5	0	0
EBT	0	2.8%	0	0	1.7	0	0	0	1.9%	0	0	1.5	0	0
EBR	0	2.8%	0	0	1.7	0	0	0	1.9%	0	0	1.5	0	0
WBL	56	2.8%	54	2	1.7	3	57	119	1.9%	117	2	1.5	3	120
WBT	0	2.8%	0	0	1.7	0	0	0	1.9%	0	0	1.5	0	0
WBR	64	2.8%	62	2	1.7	3	65	57	1.9%	56	1	1.5	2	58
North Leg														
Approach	288		280	8		14	294	160		157	3		4	161
Departure	217		211	6		10	221	149		146	3		4	151
Total	505		491	14		24	515	309		303	6		9	312
South Leg														
Approach	205		199	6		10	209	123		121	2		3	124
Departure	266		259	7		12	271	228		224	4		6	230
Total	471		458	13		22	480	351		344	7		10	354
East Leg														
Approach	120		117	3		6	122	176		173	3		5	178
Departure	130		126	4		6	133	82		80	2		2	82
Total	250		243	7		12	255	258		253	5		7	260
West Leg														
Approach	0		0	0		0	0	0		0	0		0	0
Departure	0		0	0		0	0	0		0	0		0	0
Total	0		0	0		0	0	0		0	0		0	0
Total Approaches														
Approach	613		596	17		29	625	459		450	9		13	463
Departure	613		596	17		29	625	459		450	9		13	463
Total	1,226		1,192	34		58	1,250	918		901	17		26	926

Table B-3
Existing (2007) Peak Hour Volumes (Intersections Without Classification Counts)

	Sat. Peak Hour							Sun. Peak Hour						
	Total Vehicles	Truck %	Pass. Veh.	Truck	Avg. PCE	Total Truck PCE	Total PCE Volume	Total Vehicles	Truck %	Pass. Veh.	Truck	Avg. PCE	Total Truck PCE	Total PCE Volume
8 Bear Springs Road/SR-18														
NBL	1	1.5%	1	0	1.7	0	1	12	1.5%	12	0	1.8	0	12
NBT	0	1.5%	0	0	1.7	0	0	0	1.5%	0	0	1.8	0	0
NBR	3	1.5%	3	0	1.7	0	3	12	1.5%	12	0	1.8	0	12
SBL	33	1.5%	33	0	1.7	1	33	10	1.5%	10	0	1.8	0	10
SBT	0	1.5%	0	0	1.7	0	0	2	1.5%	2	0	1.8	0	2
SBR	24	1.5%	24	0	1.7	1	24	15	1.5%	15	0	1.8	0	15
EBL	37	1.5%	36	1	1.7	1	37	13	1.5%	13	0	1.8	0	13
EBT	564	1.5%	556	8	1.7	14	570	372	1.5%	366	6	1.8	10	376
EBR	1	1.5%	1	0	1.7	0	1	10	1.5%	10	0	1.8	0	10
WBL	7	1.5%	7	0	1.7	0	7	8	1.5%	8	0	1.8	0	8
WBT	478	1.5%	471	7	1.7	12	483	370	1.5%	364	6	1.8	10	374
WBR	20	1.5%	20	0	1.7	0	20	11	1.5%	11	0	1.8	0	11
North Leg														
Approach	57		56	1		1	57	27		27	0		1	27
Departure	57		56	1		1	57	24		24	0		1	24
Total	114		112	2		3	114	51		50	1		1	51
South Leg														
Approach	4		4	0		0	4	24		24	0		1	24
Departure	8		8	0		0	8	20		20	0		1	20
Total	12		12	0		0	12	44		43	1		1	44
East Leg														
Approach	505		498	7		13	510	389		383	6		11	393
Departure	600		591	9		15	606	394		388	6		11	398
Total	1,105		1,089	16		28	1,116	783		771	12		21	791
West Leg														
Approach	602		593	9		15	608	395		389	6		11	399
Departure	503		496	7		13	508	397		391	6		11	401
Total	1,105		1,089	16		28	1,116	792		780	12		21	800
Total Approaches														
Approach	1,168		1,151	17		29	1,179	835		822	13		23	843
Departure	1,168		1,151	17		29	1,179	835		822	13		23	843
Total	2,336		2,302	34		58	2,358	1,670		1,645	25		45	1,686

Table B-3
Existing (2007) Peak Hour Volumes (Intersections Without Classification Counts)

	Sat. Peak Hour							Sun. Peak Hour						
	Total Vehicles	Truck %	Pass. Veh.	Truck	Avg. PCE	Total Truck PCE	Total PCE Volume	Total Vehicles	Truck %	Pass. Veh.	Truck	Avg. PCE	Total Truck PCE	Total PCE Volume
11 Daley Cnyn Rd/Daley Cnyn Access														
NBL	0	0.9%	0	0	1.5	0	0	0	1.7%	0	0	1.8	0	0
NBT	239	0.9%	237	2	1.5	3	240	128	1.7%	126	2	1.8	4	130
NBR	0	0.9%	0	0	1.5	0	0	1	1.7%	1	0	1.8	0	1
SBL	117	0.9%	116	1	1.5	2	118	131	1.7%	129	2	1.8	4	133
SBT	229	0.9%	227	2	1.5	3	230	227	1.7%	223	4	1.8	7	230
SBR	0	0.9%	0	0	1.5	0	0	0	1.7%	0	0	1.8	0	0
EBL	0	0.9%	0	0	1.5	0	0	0	1.7%	0	0	1.8	0	0
EBT	0	0.9%	0	0	1.5	0	0	0	1.7%	0	0	1.8	0	0
EBR	0	0.9%	0	0	1.5	0	0	0	1.7%	0	0	1.8	0	0
WBL	0	0.9%	0	0	1.5	0	0	1	1.7%	1	0	1.8	0	1
WBT	0	0.9%	0	0	1.5	0	0	0	1.7%	0	0	1.8	0	0
WBR	120	0.9%	119	1	1.5	2	121	77	1.7%	76	1	1.8	2	78
North Leg														
Approach	346		343	3		4	348	358		352	6		11	363
Departure	359		356	3		5	361	205		202	3		6	208
Total	705		699	6		9	709	563		554	9		17	571
South Leg														
Approach	239		237	2		3	240	129		127	2		4	131
Departure	229		227	2		3	230	228		224	4		7	231
Total	468		464	4		6	470	357		351	6		11	362
East Leg														
Approach	120		119	1		2	121	78		77	1		2	79
Departure	117		116	1		2	118	132		130	2		4	134
Total	237		235	2		3	239	210		206	4		6	213
West Leg														
Approach	0		0	0		0	0	0		0	0		0	0
Departure	0		0	0		0	0	0		0	0		0	0
Total	0		0	0		0	0	0		0	0		0	0
Total Approaches														
Approach	705		699	6		9	709	565		556	9		17	573
Departure	705		699	6		9	709	565		556	9		17	573
Total	1,410		1,398	12		18	1,418	1,130		1,111	19		34	1,146

Table B-3
Existing (2007) Peak Hour Volumes (Intersections Without Classification Counts)

	Sat. Peak Hour							Sun. Peak Hour						
	Total Vehicles	Truck %	Pass. Veh.	Truck	Avg. PCE	Total Truck PCE	Total PCE Volume	Total Vehicles	Truck %	Pass. Veh.	Truck	Avg. PCE	Total Truck PCE	Total PCE Volume
12 Daley Canyon Access Road/SR-18														
NBL	0	1.9%	0	0	1.7	0	0	0	1.3%	0	0	1.8	0	0
NBT	0	1.9%	0	0	1.7	0	0	0	1.3%	0	0	1.8	0	0
NBR	0	1.9%	0	0	1.7	0	0	0	1.3%	0	0	1.8	0	0
SBL	120	1.9%	118	2	1.7	4	122	128	1.3%	126	2	1.8	3	129
SBT	0	1.9%	0	0	1.7	0	0	0	1.3%	0	0	1.8	0	0
SBR	0	1.9%	0	0	1.7	0	0	0	1.3%	0	0	1.8	0	0
EBL	0	1.9%	0	0	1.7	0	0	3	1.3%	3	0	1.8	0	3
EBT	353	1.9%	346	7	1.7	11	358	211	1.3%	208	3	1.8	5	213
EBR	0	1.9%	0	0	1.7	0	0	0	1.3%	0	0	1.8	0	0
WBL	0	1.9%	0	0	1.7	0	0	0	1.3%	0	0	1.8	0	0
WBT	274	1.9%	269	5	1.7	9	278	234	1.3%	231	3	1.8	6	237
WBR	120	1.9%	118	2	1.7	4	122	110	1.3%	109	1	1.8	3	111
North Leg														
Approach	120		118	2		4	122	128		126	2		3	129
Departure	120		118	2		4	122	113		111	2		3	114
Total	240		235	5		8	244	241		238	3		6	243
South Leg														
Approach	0		0	0		0	0	0		0	0		0	0
Departure	0		0	0		0	0	0		0	0		0	0
Total	0		0	0		0	0	0		0	0		0	0
East Leg														
Approach	394		386	8		13	400	344		339	5		8	348
Departure	473		464	9		15	480	339		334	5		8	342
Total	867		850	17		28	880	683		674	9		17	690
West Leg														
Approach	353		346	7		11	358	214		211	3		5	216
Departure	274		269	5		9	278	234		231	3		6	237
Total	627		615	12		20	636	448		442	6		11	453
Total Approaches														
Approach	867		850	17		28	880	686		677	9		17	693
Departure	867		850	17		28	880	686		677	9		17	693
Total	1,734		1,701	33		56	1,760	1,372		1,354	18		33	1,386

Table B-3
Existing (2007) Peak Hour Volumes (Intersections Without Classification Counts)

	Sat. Peak Hour							Sun. Peak Hour						
	Total Vehicles	Truck %	Pass. Veh.	Truck	Avg. PCE	Total Truck PCE	Total PCE Volume	Total Vehicles	Truck %	Pass. Veh.	Truck	Avg. PCE	Total Truck PCE	Total PCE Volume
13 SR-173/SR-18														
NBL	0	1.9%	0	0	1.7	0	0	0	1.3%	0	0	1.8	0	0
NBT	0	1.9%	0	0	1.7	0	0	0	1.3%	0	0	1.8	0	0
NBR	0	1.9%	0	0	1.7	0	0	0	1.3%	0	0	1.8	0	0
SBL	67	1.9%	66	1	1.7	2	68	36	1.3%	36	0	1.8	1	36
SBT	0	1.9%	0	0	1.7	0	0	0	1.3%	0	0	1.8	0	0
SBR	112	1.9%	110	2	1.7	4	114	109	1.3%	108	1	1.8	3	110
EBL	194	1.9%	190	4	1.7	6	197	170	1.3%	168	2	1.8	4	172
EBT	230	1.9%	226	4	1.7	7	233	124	1.3%	122	2	1.8	3	125
EBR	0	1.9%	0	0	1.7	0	0	0	1.3%	0	0	1.8	0	0
WBL	0	1.9%	0	0	1.7	0	0	0	1.3%	0	0	1.8	0	0
WBT	199	1.9%	195	4	1.7	6	202	132	1.3%	130	2	1.8	3	133
WBR	71	1.9%	70	1	1.7	2	72	92	1.3%	91	1	1.8	2	93
North Leg														
Approach	179		176	3		6	182	145		143	2		4	146
Departure	265		260	5		9	269	262		258	4		6	265
Total	444		436	8		14	451	407		402	5		10	411
South Leg														
Approach	0		0	0		0	0	0		0	0		0	0
Departure	0		0	0		0	0	0		0	0		0	0
Total	0		0	0		0	0	0		0	0		0	0
East Leg														
Approach	270		265	5		9	274	224		221	3		5	226
Departure	297		291	6		10	301	160		158	2		4	161
Total	567		556	11		18	575	384		379	5		9	387
West Leg														
Approach	424		416	8		14	430	294		290	4		7	297
Departure	311		305	6		10	316	241		238	3		6	243
Total	735		721	14		24	746	535		528	7		13	540
Total Approaches														
Approach	873		856	17		28	886	663		654	9		16	669
Departure	873		856	17		28	886	663		654	9		16	669
Total	1,746		1,713	33		57	1,772	1,326		1,308	18		32	1,338

Church of the Woods
Table B-4
Existing (2007) Peak Hour Volume Summary

	Sat. Peak Hour			Sun. Peak Hour		
	Passenger Vehicles	Truck PCE	Total PCE Volume	Passenger Vehicles	Truck PCE	Total PCE Volume
1 North Road/SR-189						
NBL	0	0	0	0	0	0
NBT	0	0	0	0	0	0
NBR	0	0	0	0	0	0
SBL	123	6	129	67	2	69
SBT	0	0	0	0	0	0
SBR	37	2	39	39	1	40
EBL	27	1	29	27	1	28
EBT	123	6	129	61	2	63
EBR	0	0	0	0	0	0
WBL	0	0	0	0	0	0
WBT	116	6	121	113	3	116
WBR	102	5	107	58	2	60
North Leg						
Approach	160	8	168	106	3	109
Departure	129	6	136	85	2	88
Total	290	14	304	191	5	197
South Leg						
Approach	0	0	0	0	0	0
Departure	0	0	0	0	0	0
Total	0	0	0	0	0	0
East Leg						
Approach	218	11	228	171	5	176
Departure	247	12	258	128	4	132
Total	465	22	486	298	9	308
West Leg						
Approach	151	7	158	88	3	91
Departure	153	7	160	152	4	156
Total	303	15	318	240	7	247
Total Approaches						
Approach	529	26	554	365	10	376
Departure	529	26	554	365	10	376
Total	1,058	51	1,108	730	21	752

Church of the Woods
Table B-4
Existing (2007) Peak Hour Volume Summary

	Sat. Peak Hour			Sun. Peak Hour		
	Passenger Vehicles	Truck PCE	Total PCE Volume	Passenger Vehicles	Truck PCE	Total PCE Volume
2 Bear Springs Road/SR-189						
NBL	16	1	16	9	0	9
NBT	10	0	10	10	0	10
NBR	11	1	11	7	0	7
SBL	25	1	27	26	1	26
SBT	8	0	8	8	0	8
SBR	45	2	47	44	1	45
EBL	48	2	50	31	1	32
EBT	163	8	171	110	3	113
EBR	24	1	25	16	0	16
WBL	8	0	8	9	0	9
WBT	159	8	166	136	4	140
WBR	24	1	25	14	0	14
North Leg						
Approach	78	4	82	78	2	79
Departure	82	4	85	55	2	56
Total	159	8	167	132	4	135
South Leg						
Approach	36	2	37	26	1	26
Departure	40	2	41	32	1	33
Total	76	4	78	58	2	59
East Leg						
Approach	191	9	199	159	5	163
Departure	199	10	209	142	4	146
Total	390	19	408	301	9	309
West Leg						
Approach	235	11	246	157	4	161
Departure	219	11	229	189	5	194
Total	454	22	475	346	10	355
Total Approaches						
Approach	540	26	564	419	12	429
Departure	540	26	564	419	12	429
Total	1,079	52	1,128	838	24	858

Church of the Woods
Table B-4
Existing (2007) Peak Hour Volume Summary

	Sat. Peak Hour			Sun. Peak Hour		
	Passenger Vehicles	Truck PCE	Total PCE Volume	Passenger Vehicles	Truck PCE	Total PCE Volume
3 Grass Valley Road/SR-189						
NBL	0	0	0	0	0	0
NBT	0	0	0	0	0	0
NBR	0	0	0	0	0	0
SBL	199	5	204	180	2	182
SBT	0	0	0	0	0	0
SBR	180	4	185	124	1	125
EBL	89	2	91	51	1	51
EBT	161	4	164	123	1	124
EBR	0	0	0	0	0	0
WBL	0	0	0	0	0	0
WBT	65	2	67	42	0	42
WBR	111	3	114	66	1	67
North Leg						
Approach	380	9	389	304	4	307
Departure	200	5	205	117	1	118
Total	580	13	594	421	5	425
South Leg						
Approach	0	0	0	0	0	0
Departure	0	0	0	0	0	0
Total	0	0	0	0	0	0
East Leg						
Approach	176	4	181	108	1	109
Departure	360	8	368	303	4	306
Total	536	12	549	411	5	415
West Leg						
Approach	249	6	255	174	2	175
Departure	245	6	252	166	2	167
Total	495	11	507	339	4	342
Total Approaches						
Approach	805	19	825	585	7	591
Departure	805	19	825	585	7	591
Total	1,611	37	1,650	1,171	14	1,182

Church of the Woods
Table B-4
Existing (2007) Peak Hour Volume Summary

	Sat. Peak Hour			Sun. Peak Hour		
	Passenger Vehicles	Truck PCE	Total PCE Volume	Passenger Vehicles	Truck PCE	Total PCE Volume
4 Daley Canyon Road/SR-189						
NBL	118	2	120	68	2	70
NBT	249	9	258	118	5	123
NBR	0	0	0	0	0	0
SBL	0	0	0	0	0	0
SBT	189	3	192	205	5	210
SBR	57	2	59	31	0	31
EBL	239	5	244	144	2	146
EBT	0	0	0	0	0	0
EBR	141	5	146	146	2	148
WBL	0	0	0	0	0	0
WBT	0	0	0	0	0	0
WBR	0	0	0	0	0	0
North Leg						
Approach	246	5	251	236	5	241
Departure	488	14	502	262	6	269
Total	734	19	753	498	11	510
South Leg						
Approach	367	11	378	186	6	193
Departure	330	8	338	351	6	358
Total	697	18	716	537	12	551
East Leg						
Approach	0	0	0	0	0	0
Departure	0	0	0	0	0	0
Total	0	0	0	0	0	0
West Leg						
Approach	380	10	390	290	3	294
Departure	175	3	179	99	2	101
Total	555	13	569	389	5	395
Total Approaches						
Approach	993	25	1,019	712	14	728
Departure	993	25	1,019	712	14	728
Total	1,986	49	2,038	1,424	27	1,456

Church of the Woods
Table B-4
Existing (2007) Peak Hour Volume Summary

	Sat. Peak Hour			Sun. Peak Hour		
	Passenger Vehicles	Truck PCE	Total PCE Volume	Passenger Vehicles	Truck PCE	Total PCE Volume
5 North Bay Road/SR-189						
NBL	0	0	0	0	0	0
NBT	0	0	0	0	0	0
NBR	0	0	0	0	0	0
SBL	103	3	106	55	1	57
SBT	0	0	0	0	0	0
SBR	206	5	211	181	4	185
EBL	219	6	224	129	3	132
EBT	240	6	247	148	3	151
EBR	0	0	0	0	0	0
WBL	0	0	0	0	0	0
WBT	166	4	170	145	3	148
WBR	78	2	80	60	1	62
North Leg						
Approach	309	8	317	236	5	242
Departure	297	8	304	190	4	194
Total	606	15	621	426	9	436
South Leg						
Approach	0	0	0	0	0	0
Departure	0	0	0	0	0	0
Total	0	0	0	0	0	0
East Leg						
Approach	243	6	250	206	4	210
Departure	344	9	353	204	4	208
Total	587	15	603	409	9	418
West Leg						
Approach	459	12	471	278	6	283
Departure	371	9	381	326	7	333
Total	831	21	852	604	13	616
Total Approaches						
Approach	1,012	26	1,038	719	16	735
Departure	1,012	26	1,038	719	16	735
Total	2,024	52	2,076	1,439	31	1,470

Church of the Woods
Table B-4
Existing (2007) Peak Hour Volume Summary

	Sat. Peak Hour			Sun. Peak Hour		
	Passenger Vehicles	Truck PCE	Total PCE Volume	Passenger Vehicles	Truck PCE	Total PCE Volume
6 Lake Gregory Drive/SR-189						
NBL	0	0	0	0	0	0
NBT	149	7	156	90	3	93
NBR	51	2	53	30	1	31
SBL	76	4	80	50	1	51
SBT	204	10	214	107	3	110
SBR	0	0	0	0	0	0
EBL	0	0	0	0	0	0
EBT	0	0	0	0	0	0
EBR	0	0	0	0	0	0
WBL	54	3	57	117	3	120
WBT	0	0	0	0	0	0
WBR	62	3	65	56	2	58
North Leg						
Approach	280	14	294	157	4	161
Departure	211	10	221	146	4	151
Total	491	24	515	303	9	312
South Leg						
Approach	199	10	209	121	3	124
Departure	259	12	271	224	6	230
Total	458	22	480	344	10	354
East Leg						
Approach	117	6	122	173	5	178
Departure	126	6	133	80	2	82
Total	243	12	255	253	7	260
West Leg						
Approach	0	0	0	0	0	0
Departure	0	0	0	0	0	0
Total	0	0	0	0	0	0
Total Approaches						
Approach	596	29	625	450	13	463
Departure	596	29	625	450	13	463
Total	1,192	58	1,250	901	26	926

Church of the Woods
Table B-4
Existing (2007) Peak Hour Volume Summary

	Sat. Peak Hour			Sun. Peak Hour		
	Passenger Vehicles	Truck PCE	Total PCE Volume	Passenger Vehicles	Truck PCE	Total PCE Volume
7 Lake Gregory Drive/SR-18						
NBL	0	0	0	0	0	0
NBT	0	0	0	0	0	0
NBR	0	0	0	0	0	0
SBL	195	3	198	114	2	116
SBT	0	0	0	0	0	0
SBR	69	2	71	124	5	129
EBL	86	5	91	45	2	47
EBT	311	16	327	180	5	185
EBR	0	0	0	0	0	0
WBL	0	0	0	0	0	0
WBT	280	13	293	324	8	332
WBR	108	13	121	84	3	87
North Leg						
Approach	264	5	269	238	6	245
Departure	194	18	212	129	5	134
Total	458	22	481	367	11	379
South Leg						
Approach	0	0	0	0	0	0
Departure	0	0	0	0	0	0
Total	0	0	0	0	0	0
East Leg						
Approach	388	26	414	408	11	419
Departure	506	19	525	294	6	301
Total	894	44	939	702	17	720
West Leg						
Approach	397	20	418	225	6	232
Departure	349	14	364	448	12	461
Total	746	34	782	673	18	693
Total Approaches						
Approach	1,049	50	1,101	871	23	896
Departure	1,049	50	1,101	871	23	896
Total	2,098	100	2,202	1,742	45	1,792

Church of the Woods
Table B-4
Existing (2007) Peak Hour Volume Summary

	Sat. Peak Hour			Sun. Peak Hour		
	Passenger Vehicles	Truck PCE	Total PCE Volume	Passenger Vehicles	Truck PCE	Total PCE Volume
8 Bear Springs Road/SR-18						
NBL	1	0	1	12	0	12
NBT	0	0	0	0	0	0
NBR	3	0	3	12	0	12
SBL	33	1	33	10	0	10
SBT	0	0	0	2	0	2
SBR	24	1	24	15	0	15
EBL	36	1	37	13	0	13
EBT	556	14	570	366	10	376
EBR	1	0	1	10	0	10
WBL	7	0	7	8	0	8
WBT	471	12	483	364	10	374
WBR	20	0	20	11	0	11
North Leg						
Approach	56	1	57	27	1	27
Departure	56	1	57	24	1	24
Total	112	3	114	50	1	51
South Leg						
Approach	4	0	4	24	1	24
Departure	8	0	8	20	1	20
Total	12	0	12	43	1	44
East Leg						
Approach	498	13	510	383	11	393
Departure	591	15	606	388	11	398
Total	1,089	28	1,116	771	21	791
West Leg						
Approach	593	15	608	389	11	399
Departure	496	13	508	391	11	401
Total	1,089	28	1,116	780	21	800
Total Approaches						
Approach	1,151	29	1,179	822	23	843
Departure	1,151	29	1,179	822	23	843
Total	2,302	58	2,358	1,645	45	1,686

Church of the Woods
Table B-4
Existing (2007) Peak Hour Volume Summary

	Sat. Peak Hour			Sun. Peak Hour		
	Passenger Vehicles	Truck PCE	Total PCE Volume	Passenger Vehicles	Truck PCE	Total PCE Volume
9 Project Access/SR-18						
NBL	0	0	0	0	0	0
NBT	0	0	0	0	0	0
NBR	0	0	0	0	0	0
SBL	0	0	0	0	0	0
SBT	0	0	0	0	0	0
SBR	0	0	0	0	0	0
EBL	0	0	0	0	0	0
EBT	602	11	613	335	11	346
EBR	0	0	0	0	0	0
WBL	0	0	0	0	0	0
WBT	472	16	488	450	11	461
WBR	0	0	0	0	0	0
North Leg						
Approach	0	0	0	0	0	0
Departure	0	0	0	0	0	0
Total	0	0	0	0	0	0
South Leg						
Approach	0	0	0	0	0	0
Departure	0	0	0	0	0	0
Total	0	0	0	0	0	0
East Leg						
Approach	472	16	488	450	11	461
Departure	602	11	613	335	11	346
Total	1,074	27	1,101	785	21	807
West Leg						
Approach	602	11	613	335	11	346
Departure	472	16	488	450	11	461
Total	1,074	27	1,101	785	21	807
Total Approaches						
Approach	1,074	27	1,101	785	21	807
Departure	1,074	27	1,101	785	21	807
Total	2,148	53	2,202	1,570	42	1,614

Church of the Woods
Table B-4
Existing (2007) Peak Hour Volume Summary

	Sat. Peak Hour			Sun. Peak Hour		
	Passenger Vehicles	Truck PCE	Total PCE Volume	Passenger Vehicles	Truck PCE	Total PCE Volume
10 Daley Canyon Road/SR-18						
NBL	0	0	0	0	0	0
NBT	0	0	0	0	0	0
NBR	0	0	0	0	0	0
SBL	0	0	0	2	0	2
SBT	0	0	0	0	0	0
SBR	219	5	224	224	3	227
EBL	240	2	242	125	8	133
EBT	362	10	372	210	3	213
EBR	0	0	0	0	0	0
WBL	0	0	0	0	0	0
WBT	253	11	264	226	8	234
WBR	0	0	0	1	0	1
North Leg						
Approach	219	5	224	226	3	229
Departure	240	2	242	126	8	134
Total	459	6	466	352	11	363
South Leg						
Approach	0	0	0	0	0	0
Departure	0	0	0	0	0	0
Total	0	0	0	0	0	0
East Leg						
Approach	253	11	264	227	8	235
Departure	362	10	372	212	3	215
Total	615	21	636	439	11	450
West Leg						
Approach	602	11	614	335	11	346
Departure	472	16	488	450	11	461
Total	1,074	27	1,102	785	21	807
Total Approaches						
Approach	1,074	27	1,102	788	21	810
Departure	1,074	27	1,102	788	21	810
Total	2,148	53	2,204	1,576	42	1,620

Church of the Woods
Table B-4
Existing (2007) Peak Hour Volume Summary

	Sat. Peak Hour			Sun. Peak Hour		
	Passenger Vehicles	Truck PCE	Total PCE Volume	Passenger Vehicles	Truck PCE	Total PCE Volume
11 Daley Cnyn Rd/Daley Cnyn Access						
NBL	0	0	0	0	0	0
NBT	237	3	240	126	4	130
NBR	0	0	0	1	0	1
SBL	116	2	118	129	4	133
SBT	227	3	230	223	7	230
SBR	0	0	0	0	0	0
EBL	0	0	0	0	0	0
EBT	0	0	0	0	0	0
EBR	0	0	0	0	0	0
WBL	0	0	0	1	0	1
WBT	0	0	0	0	0	0
WBR	119	2	121	76	2	78
North Leg						
Approach	343	4	348	352	11	363
Departure	356	5	361	202	6	208
Total	699	9	709	554	17	571
South Leg						
Approach	237	3	240	127	4	131
Departure	227	3	230	224	7	231
Total	464	6	470	351	11	362
East Leg						
Approach	119	2	121	77	2	79
Departure	116	2	118	130	4	134
Total	235	3	239	206	6	213
West Leg						
Approach	0	0	0	0	0	0
Departure	0	0	0	0	0	0
Total	0	0	0	0	0	0
Total Approaches						
Approach	699	9	709	556	17	573
Departure	699	9	709	556	17	573
Total	1,398	18	1,418	1,111	34	1,146

Church of the Woods
Table B-4
Existing (2007) Peak Hour Volume Summary

	Sat. Peak Hour			Sun. Peak Hour		
	Passenger Vehicles	Truck PCE	Total PCE Volume	Passenger Vehicles	Truck PCE	Total PCE Volume
12 Daley Canyon Access Road/SR-18						
NBL	0	0	0	0	0	0
NBT	0	0	0	0	0	0
NBR	0	0	0	0	0	0
SBL	118	4	122	126	3	129
SBT	0	0	0	0	0	0
SBR	0	0	0	0	0	0
EBL	0	0	0	3	0	3
EBT	346	11	358	208	5	213
EBR	0	0	0	0	0	0
WBL	0	0	0	0	0	0
WBT	269	9	278	231	6	237
WBR	118	4	122	109	3	111
North Leg						
Approach	118	4	122	126	3	129
Departure	118	4	122	111	3	114
Total	235	8	244	238	6	243
South Leg						
Approach	0	0	0	0	0	0
Departure	0	0	0	0	0	0
Total	0	0	0	0	0	0
East Leg						
Approach	386	13	400	339	8	348
Departure	464	15	480	334	8	342
Total	850	28	880	674	17	690
West Leg						
Approach	346	11	358	211	5	216
Departure	269	9	278	231	6	237
Total	615	20	636	442	11	453
Total Approaches						
Approach	850	28	880	677	17	693
Departure	850	28	880	677	17	693
Total	1,701	56	1,760	1,354	33	1,386

Church of the Woods
Table B-4
Existing (2007) Peak Hour Volume Summary

	Sat. Peak Hour			Sun. Peak Hour		
	Passenger Vehicles	Truck PCE	Total PCE Volume	Passenger Vehicles	Truck PCE	Total PCE Volume
13 SR-173/SR-18						
NBL	0	0	0	0	0	0
NBT	0	0	0	0	0	0
NBR	0	0	0	0	0	0
SBL	66	2	68	36	1	36
SBT	0	0	0	0	0	0
SBR	110	4	114	108	3	110
EBL	190	6	197	168	4	172
EBT	226	7	233	122	3	125
EBR	0	0	0	0	0	0
WBL	0	0	0	0	0	0
WBT	195	6	202	130	3	133
WBR	70	2	72	91	2	93
North Leg						
Approach	176	6	182	143	4	146
Departure	260	9	269	258	6	265
Total	436	14	451	402	10	411
South Leg						
Approach	0	0	0	0	0	0
Departure	0	0	0	0	0	0
Total	0	0	0	0	0	0
East Leg						
Approach	265	9	274	221	5	226
Departure	291	10	301	158	4	161
Total	556	18	575	379	9	387
West Leg						
Approach	416	14	430	290	7	297
Departure	305	10	316	238	6	243
Total	721	24	746	528	13	540
Total Approaches						
Approach	856	28	886	654	16	669
Departure	856	28	886	654	16	669
Total	1,713	57	1,772	1,308	32	1,338

Table B-5
Balance of Existing Intersection Volumes

	Sat. Peak Hour			Sun. Peak Hour		
	Unbalanced Total PCE	Adjustment	Balanced Total PCE	Unbalanced Total PCE	Adjustment	Balanced Total PCE
1 North Road/SR-189						
NBL	0		0	0		0
NBT	0		0	0		0
NBR	0		0	0		0
SBL	129		129	69		69
SBT	0		0	0		0
SBR	39		39	40		40
EBL	29		29	28		28
EBT	129		129	63		63
EBR	0		0	0		0
WBL	0		0	0		0
WBT	121		121	116		116
WBR	107		107	60		60
North Leg						
Approach	168	0	168	109	0	109
Departure	136	0	136	88	0	88
Total	304	0	304	197	0	197
South Leg						
Approach	0	0	0	0	0	0
Departure	0	0	0	0	0	0
Total	0	0	0	0	0	0
East Leg						
Approach	228	0	228	176	0	176
Departure	258	0	258	132	0	132
Total	486	0	486	308	0	308
West Leg						
Approach	158	0	158	91	0	91
Departure	160	0	160	156	0	156
Total	318	0	318	247	0	247
Total Approaches						
Approach	554	0	554	376	0	376
Departure	554	0	554	376	0	376
Total	1,108	0	1,108	752	0	752

Table B-5
Balance of Existing Intersection Volumes

	Sat. Peak Hour			Sun. Peak Hour		
	Unbalanced Total PCE	Adjustment	Balanced Total PCE	Unbalanced Total PCE	Adjustment	Balanced Total PCE
2 Bear Springs Road/SR-189						
NBL	16		16	9		9
NBT	10		10	10		10
NBR	11		11	7		7
SBL	27		27	26		26
SBT	8		8	8		8
SBR	47		47	45		45
EBL	50		50	32		32
EBT	171		171	113		113
EBR	25		25	16		16
WBL	8		8	9		9
WBT	166		166	140		140
WBR	25		25	14		14
North Leg						
Approach	82	0	82	79	0	79
Departure	85	0	85	56	0	56
Total	167	0	167	135	0	135
South Leg						
Approach	37	0	37	26	0	26
Departure	41	0	41	33	0	33
Total	78	0	78	59	0	59
East Leg						
Approach	199	0	199	163	0	163
Departure	209	0	209	146	0	146
Total	408	0	408	309	0	309
West Leg						
Approach	246	0	246	161	0	161
Departure	229	0	229	194	0	194
Total	475	0	475	355	0	355
Total Approaches						
Approach	564	0	564	429	0	429
Departure	564	0	564	429	0	429
Total	1,128	0	1,128	858	0	858

Table B-5
Balance of Existing Intersection Volumes

	Sat. Peak Hour			Sun. Peak Hour		
	Unbalanced Total PCE	Adjustment	Balanced Total PCE	Unbalanced Total PCE	Adjustment	Balanced Total PCE
3 Grass Valley Road/SR-189						
NBL	0		0	0		0
NBT	0		0	0		0
NBR	0		0	0		0
SBL	204		204	182		182
SBT	0		0	0		0
SBR	185		185	125		125
EBL	91		91	51		51
EBT	164		164	124		124
EBR	0		0	0		0
WBL	0		0	0		0
WBT	67		67	42		42
WBR	114		114	67		67
North Leg						
Approach	389	0	389	307	0	307
Departure	205	0	205	118	0	118
Total	594	0	594	425	0	425
South Leg						
Approach	0	0	0	0	0	0
Departure	0	0	0	0	0	0
Total	0	0	0	0	0	0
East Leg						
Approach	181	0	181	109	0	109
Departure	368	0	368	306	0	306
Total	549	0	549	415	0	415
West Leg						
Approach	255	0	255	175	0	175
Departure	252	0	252	167	0	167
Total	507	0	507	342	0	342
Total Approaches						
Approach	825	0	825	591	0	591
Departure	825	0	825	591	0	591
Total	1,650	0	1,650	1,182	0	1,182

Table B-5
Balance of Existing Intersection Volumes

	Sat. Peak Hour			Sun. Peak Hour		
	Unbalanced Total PCE	Adjustment	Balanced Total PCE	Unbalanced Total PCE	Adjustment	Balanced Total PCE
4 Daley Canyon Road/SR-189						
NBL	120		120	70		70
NBT	258		258	123		123
NBR	0		0	0		0
SBL	0		0	0		0
SBT	192		192	210		210
SBR	59		59	31		31
EBL	244		244	146		146
EBT	0		0	0		0
EBR	146		146	148		148
WBL	0		0	0		0
WBT	0		0	0		0
WBR	0		0	0		0
North Leg						
Approach	251	0	251	241	0	241
Departure	502	0	502	269	0	269
Total	753	0	753	510	0	510
South Leg						
Approach	378	0	378	193	0	193
Departure	338	0	338	358	0	358
Total	716	0	716	551	0	551
East Leg						
Approach	0	0	0	0	0	0
Departure	0	0	0	0	0	0
Total	0	0	0	0	0	0
West Leg						
Approach	390	0	390	294	0	294
Departure	179	0	179	101	0	101
Total	569	0	569	395	0	395
Total Approaches						
Approach	1,019	0	1,019	728	0	728
Departure	1,019	0	1,019	728	0	728
Total	2,038	0	2,038	1,456	0	1,456

Table B-5
Balance of Existing Intersection Volumes

	Sat. Peak Hour			Sun. Peak Hour		
	Unbalanced Total PCE	Adjustment	Balanced Total PCE	Unbalanced Total PCE	Adjustment	Balanced Total PCE
5 North Bay Road/SR-189						
NBL	0		0	0		0
NBT	0		0	0		0
NBR	0		0	0		0
SBL	106		106	57		57
SBT	0		0	0		0
SBR	211		211	185		185
EBL	224		224	132		132
EBT	247		247	151		151
EBR	0		0	0		0
WBL	0		0	0		0
WBT	170		170	148		148
WBR	80		80	62		62
North Leg						
Approach	317	0	317	242	0	242
Departure	304	0	304	194	0	194
Total	621	0	621	436	0	436
South Leg						
Approach	0	0	0	0	0	0
Departure	0	0	0	0	0	0
Total	0	0	0	0	0	0
East Leg						
Approach	250	0	250	210	0	210
Departure	353	0	353	208	0	208
Total	603	0	603	418	0	418
West Leg						
Approach	471	0	471	283	0	283
Departure	381	0	381	333	0	333
Total	852	0	852	616	0	616
Total Approaches						
Approach	1,038	0	1,038	735	0	735
Departure	1,038	0	1,038	735	0	735
Total	2,076	0	2,076	1,470	0	1,470

Table B-5
Balance of Existing Intersection Volumes

	Sat. Peak Hour			Sun. Peak Hour		
	Unbalanced Total PCE	Adjustment	Balanced Total PCE	Unbalanced Total PCE	Adjustment	Balanced Total PCE
6 Lake Gregory Drive/SR-189						
NBL	0		0	0		0
NBT	156		156	93		93
NBR	53		53	31		31
SBL	80		80	51		51
SBT	214		214	110		110
SBR	0		0	0		0
EBL	0		0	0		0
EBT	0		0	0		0
EBR	0		0	0		0
WBL	57		57	120		120
WBT	0		0	0		0
WBR	65		65	58		58
North Leg						
Approach	294	0	294	161	0	161
Departure	221	0	221	151	0	151
Total	515	0	515	312	0	312
South Leg						
Approach	209	0	209	124	0	124
Departure	271	0	271	230	0	230
Total	480	0	480	354	0	354
East Leg						
Approach	122	0	122	178	0	178
Departure	133	0	133	82	0	82
Total	255	0	255	260	0	260
West Leg						
Approach	0	0	0	0	0	0
Departure	0	0	0	0	0	0
Total	0	0	0	0	0	0
Total Approaches						
Approach	625	0	625	463	0	463
Departure	625	0	625	463	0	463
Total	1,250	0	1,250	926	0	926

Table B-5
Balance of Existing Intersection Volumes

	Sat. Peak Hour			Sun. Peak Hour		
	Unbalanced Total PCE	Adjustment	Balanced Total PCE	Unbalanced Total PCE	Adjustment	Balanced Total PCE
7 Lake Gregory Drive/SR-18						
NBL	0		0	0		0
NBT	0		0	0		0
NBR	0		0	0		0
SBL	198	1	199	116	-7	109
SBT	0		0	0		0
SBR	71	1	72	129	-8	121
EBL	91	-1	90	47	-4	43
EBT	327		327	185		185
EBR	0		0	0		0
WBL	0		0	0		0
WBT	293		293	332		332
WBR	121	-2	119	87	-6	81
North Leg						
Approach	269	2	271	245	-15	230
Departure	212	-3	209	134	-10	124
Total	481	-1	480	379	-25	354
South Leg						
Approach	0	0	0	0	0	0
Departure	0	0	0	0	0	0
Total	0	0	0	0	0	0
East Leg						
Approach	414	-2	412	419	-6	413
Departure	525	1	526	301	-7	294
Total	939	-1	938	720	-13	707
West Leg						
Approach	418	-1	417	232	-4	228
Departure	364	1	365	461	-8	453
Total	782	0	782	693	-12	681
Total Approaches						
Approach	1,101	-1	1,100	896	-25	871
Departure	1,101	-1	1,100	896	-25	871
Total	2,202	-2	2,200	1,792	-50	1,742

Table B-5
Balance of Existing Intersection Volumes

		Sat. Peak Hour			Sun. Peak Hour		
		Unbalanced Total PCE	Adjustment	Balanced Total PCE	Unbalanced Total PCE	Adjustment	Balanced Total PCE
8	**Bear Springs Road/SR-18**						
NBL		1		1	12		12
NBT		0		0	0		0
NBR		3		3	12		12
SBL		33		33	10		10
SBT		0		0	2		2
SBR		24		24	15		15
EBL		37		37	13		13
EBT		570		570	376		376
EBR		1		1	10		10
WBL		7		7	8		8
WBT		483		483	374		374
WBR		20		20	11		11
North Leg							
	Approach	57	0	57	27	0	27
	Departure	57	0	57	24	0	24
	Total	114	0	114	51	0	51
South Leg							
	Approach	4	0	4	24	0	24
	Departure	8	0	8	20	0	20
	Total	12	0	12	44	0	44
East Leg							
	Approach	510	0	510	393	0	393
	Departure	606	0	606	398	0	398
	Total	1,116	0	1,116	791	0	791
West Leg							
	Approach	608	0	608	399	0	399
	Departure	508	0	508	401	0	401
	Total	1,116	0	1,116	800	0	800
Total Approaches							
	Approach	1,179	0	1,179	843	0	843
	Departure	1,179	0	1,179	843	0	843
	Total	2,358	0	2,358	1,686	0	1,686

Table B-5
Balance of Existing Intersection Volumes

	Sat. Peak Hour			Sun. Peak Hour		
	Unbalanced Total PCE	Adjustment	Balanced Total PCE	Unbalanced Total PCE	Adjustment	Balanced Total PCE
9 Project Access/SR-18						
NBL	0		0	0		0
NBT	0		0	0		0
NBR	0		0	0		0
SBL	0		0	0		0
SBT	0		0	0		0
SBR	0		0	0		0
EBL	0		0	0		0
EBT	613		613	346		346
EBR	0		0	0		0
WBL	0		0	0		0
WBT	488		488	461		461
WBR	0		0	0		0
North Leg						
Approach	0	0	0	0	0	0
Departure	0	0	0	0	0	0
Total	0	0	0	0	0	0
South Leg						
Approach	0	0	0	0	0	0
Departure	0	0	0	0	0	0
Total	0	0	0	0	0	0
East Leg						
Approach	488	0	488	461	0	461
Departure	613	0	613	346	0	346
Total	1,101	0	1,101	807	0	807
West Leg						
Approach	613	0	613	346	0	346
Departure	488	0	488	461	0	461
Total	1,101	0	1,101	807	0	807
Total Approaches						
Approach	1,101	0	1,101	807	0	807
Departure	1,101	0	1,101	807	0	807
Total	2,202	0	2,202	1,614	0	1,614

Table B-5
Balance of Existing Intersection Volumes

	Sat. Peak Hour			Sun. Peak Hour		
	Unbalanced Total PCE	Adjustment	Balanced Total PCE	Unbalanced Total PCE	Adjustment	Balanced Total PCE
10 Daley Canyon Road/SR-18						
NBL	0		0	0		0
NBT	0		0	0		0
NBR	0		0	0		0
SBL	0		0	2	-2	0
SBT	0		0	0		0
SBR	224		224	227		227
EBL	242		242	133	3	136
EBT	372		372	213	-3	210
EBR	0		0	0		0
WBL	0		0	0		0
WBT	264		264	234		234
WBR	0		0	1	-1	0
North Leg						
Approach	224	0	224	229	-2	227
Departure	242	0	242	134	2	136
Total	466	0	466	363	0	363
South Leg						
Approach	0	0	0	0	0	0
Departure	0	0	0	0	0	0
Total	0	0	0	0	0	0
East Leg						
Approach	264	0	264	235	-1	234
Departure	372	0	372	215	-5	210
Total	636	0	636	450	-6	444
West Leg						
Approach	614	0	614	346	0	346
Departure	488	0	488	461	0	461
Total	1,102	0	1,102	807	0	807
Total Approaches						
Approach	1,102	0	1,102	810	-3	807
Departure	1,102	0	1,102	810	-3	807
Total	2,204	0	2,204	1,620	-6	1,614

Table B-5
Balance of Existing Intersection Volumes

	Sat. Peak Hour			Sun. Peak Hour		
	Unbalanced Total PCE	Adjustment	Balanced Total PCE	Unbalanced Total PCE	Adjustment	Balanced Total PCE
11 Daley Cnyn Rd/Daley Cnyn Access						
NBL	0		0	0		0
NBT	240	2	242	130	6	136
NBR	0		0	1	-1	0
SBL	118	4	122	133	2	135
SBT	230	-6	224	230	-3	227
SBR	0		0	0		0
EBL	0		0	0		0
EBT	0		0	0		0
EBR	0		0	0		0
WBL	0		0	1	-1	0
WBT	0		0	0		0
WBR	121	1	122	78	33	111
North Leg						
Approach	348	-2	346	363	-1	362
Departure	361	3	364	208	39	247
Total	709	1	710	571	38	609
South Leg						
Approach	240	2	242	131	5	136
Departure	230	-6	224	231	-4	227
Total	470	-4	466	362	1	363
East Leg						
Approach	121	1	122	79	32	111
Departure	118	4	122	134	1	135
Total	239	5	244	213	33	246
West Leg						
Approach	0	0	0	0	0	0
Departure	0	0	0	0	0	0
Total	0	0	0	0	0	0
Total Approaches						
Approach	709	1	710	573	36	609
Departure	709	1	710	573	36	609
Total	1,418	2	1,420	1,146	72	1,218

Table B-5
Balance of Existing Intersection Volumes

	Sat. Peak Hour			Sun. Peak Hour		
	Unbalanced Total PCE	Adjustment	Balanced Total PCE	Unbalanced Total PCE	Adjustment	Balanced Total PCE
12 Daley Canyon Access Road/SR-18						
NBL	0		0	0		0
NBT	0		0	0		0
NBR	0		0	0		0
SBL	122		122	129	6	135
SBT	0		0	0		0
SBR	0		0	0		0
EBL	0		0	3	-3	0
EBT	358	14	372	213	-3	210
EBR	0		0	0		0
WBL	0		0	0		0
WBT	278	-14	264	237	-3	234
WBR	122		122	111		111
North Leg						
Approach	122	0	122	129	6	135
Departure	122	0	122	114	-3	111
Total	244	0	244	243	3	246
South Leg						
Approach	0	0	0	0	0	0
Departure	0	0	0	0	0	0
Total	0	0	0	0	0	0
East Leg						
Approach	400	-14	386	348	-3	345
Departure	480	14	494	342	3	345
Total	880	0	880	690	0	690
West Leg						
Approach	358	14	372	216	-6	210
Departure	278	-14	264	237	-3	234
Total	636	0	636	453	-9	444
Total Approaches						
Approach	880	0	880	693	-3	690
Departure	880	0	880	693	-3	690
Total	1,760	0	1,760	1,386	-6	1,380

Table B-5
Balance of Existing Intersection Volumes

	Sat. Peak Hour			Sun. Peak Hour		
	Unbalanced Total PCE	Adjustment	Balanced Total PCE	Unbalanced Total PCE	Adjustment	Balanced Total PCE
13 SR-173/SR-18						
NBL	0		0	0		0
NBT	0		0	0		0
NBR	0		0	0		0
SBL	68		68	36		36
SBT	0		0	0		0
SBR	114		114	110		110
EBL	197		197	172		172
EBT	233		233	125		125
EBR	0		0	0		0
WBL	0		0	0		0
WBT	202		202	133		133
WBR	72		72	93		93
North Leg						
Approach	182	0	182	146	0	146
Departure	269	0	269	265	0	265
Total	451	0	451	411	0	411
South Leg						
Approach	0	0	0	0	0	0
Departure	0	0	0	0	0	0
Total	0	0	0	0	0	0
East Leg						
Approach	274	0	274	226	0	226
Departure	301	0	301	161	0	161
Total	575	0	575	387	0	387
West Leg						
Approach	430	0	430	297	0	297
Departure	316	0	316	243	0	243
Total	746	0	746	540	0	540
Total Approaches						
Approach	886	0	886	669	0	669
Departure	886	0	886	669	0	669
Total	1,772	0	1,772	1,338	0	1,338

Table B-6 - Seasonal Adjustment Factor Calculation

Intersection	March 2007 Count	Caltrans Peak Month Count	Percentage Difference
SR-18/SR-189			
Sunday A.M. Peak Hour (one-way peak hour volume)	413	518	25.42%

Counts were taken from the Total Wesbound Approach for intersection 7
Caltrans counts were taken from Caltrans peak hour volume data

Church of the Woods
Table B-7
Existing (2007) Peak Hour Volume Summary

	Saturday Peak Hour			Sunday Peak Hour		
	Existing Balanced PCE	Seasonal Adjustment	Total Adjusted Volume	Existing Balanced PCE	Seasonal Adjustment	Total Adjusted Volume
1 North Road/SR-189						
NBL	0	0	0	0	0	0
NBT	0	0	0	0	0	0
NBR	0	0	0	0	0	0
SBL	129	33	162	69	18	87
SBT	0	0	0	0	0	0
SBR	39	10	49	40	10	50
EBL	29	7	36	28	7	35
EBT	129	33	162	63	16	79
EBR	0	0	0	0	0	0
WBL	0	0	0	0	0	0
WBT	121	31	152	116	29	145
WBR	107	27	134	60	15	75
North Leg						
Approach	168	43	211	109	28	137
Departure	136	35	170	88	22	110
Total	304	77	381	197	50	247
South Leg						
Approach	0	0	0	0	0	0
Departure	0	0	0	0	0	0
Total	0	0	0	0	0	0
East Leg						
Approach	228	58	286	176	45	220
Departure	258	66	324	132	34	166
Total	486	124	610	308	78	386
West Leg						
Approach	158	40	198	91	23	114
Departure	160	41	201	156	40	195
Total	318	81	399	247	63	309
Total Approaches						
Approach	554	141	695	376	96	471
Departure	554	141	695	376	96	471
Total	1,108	282	1,390	752	191	942

Church of the Woods
Table B-7
Existing (2007) Peak Hour Volume Summary

	Saturday Peak Hour			Sunday Peak Hour		
	Existing Balanced PCE	Seasonal Adjustment	Total Adjusted Volume	Existing Balanced PCE	Seasonal Adjustment	Total Adjusted Volume
2 Bear Springs Road/SR-189						
NBL	16	4	20	9	2	11
NBT	10	3	13	10	3	13
NBR	11	3	14	7	2	9
SBL	27	7	34	26	7	33
SBT	8	2	10	8	2	10
SBR	47	12	59	45	11	56
EBL	50	13	63	32	8	40
EBT	171	43	214	113	29	142
EBR	25	6	31	16	4	20
WBL	8	2	10	9	2	11
WBT	166	42	208	140	36	176
WBR	25	6	31	14	4	18
North Leg						
Approach	82	21	103	79	20	99
Departure	85	22	107	56	14	71
Total	167	42	210	135	34	170
South Leg						
Approach	37	9	47	26	7	33
Departure	41	10	51	33	8	41
Total	78	20	98	59	15	74
East Leg						
Approach	199	51	249	163	41	205
Departure	209	53	262	146	37	184
Total	408	104	511	309	79	389
West Leg						
Approach	246	63	308	161	41	202
Departure	229	58	287	194	49	243
Total	475	121	595	355	90	445
Total Approaches						
Approach	564	143	707	429	109	539
Departure	564	143	707	429	109	539
Total	1,128	287	1,414	858	218	1,078

Church of the Woods
Table B-7
Existing (2007) Peak Hour Volume Summary

	Saturday Peak Hour			Sunday Peak Hour		
	Existing Balanced PCE	Seasonal Adjustment	Total Adjusted Volume	Existing Balanced PCE	Seasonal Adjustment	Total Adjusted Volume
3 Grass Valley Road/SR-189						
NBL	0	0	0	0	0	0
NBT	0	0	0	0	0	0
NBR	0	0	0	0	0	0
SBL	204	52	256	182	46	228
SBT	0	0	0	0	0	0
SBR	185	47	232	125	32	157
EBL	91	23	114	51	13	64
EBT	164	42	206	124	32	156
EBR	0	0	0	0	0	0
WBL	0	0	0	0	0	0
WBT	67	17	84	42	11	53
WBR	114	29	143	67	17	84
North Leg						
Approach	389	99	488	307	78	385
Departure	205	52	257	118	30	148
Total	594	151	745	425	108	533
South Leg						
Approach	0	0	0	0	0	0
Departure	0	0	0	0	0	0
Total	0	0	0	0	0	0
East Leg						
Approach	181	46	227	109	28	137
Departure	368	94	462	306	78	384
Total	549	140	689	415	106	521
West Leg						
Approach	255	65	320	175	44	220
Departure	252	64	316	167	42	210
Total	507	129	636	342	87	430
Total Approaches						
Approach	825	210	1,035	591	150	742
Departure	825	210	1,035	591	150	742
Total	1,650	419	2,070	1,182	301	1,484

Church of the Woods
Table B-7
Existing (2007) Peak Hour Volume Summary

	Saturday Peak Hour			Sunday Peak Hour		
	Existing Balanced PCE	Seasonal Adjustment	Total Adjusted Volume	Existing Balanced PCE	Seasonal Adjustment	Total Adjusted Volume
4 Daley Canyon Road/SR-189						
NBL	120	31	151	70	18	88
NBT	258	66	324	123	31	154
NBR	0	0	0	0	0	0
SBL	0	0	0	0	0	0
SBT	192	49	241	210	53	263
SBR	59	15	74	31	8	39
EBL	244	62	306	146	37	183
EBT	0	0	0	0	0	0
EBR	146	37	183	148	38	186
WBL	0	0	0	0	0	0
WBT	0	0	0	0	0	0
WBR	0	0	0	0	0	0
North Leg						
Approach	251	64	315	241	61	302
Departure	502	128	630	269	68	337
Total	753	191	945	510	130	639
South Leg						
Approach	378	96	475	193	49	242
Departure	338	86	424	358	91	449
Total	716	182	899	551	140	691
East Leg						
Approach	0	0	0	0	0	0
Departure	0	0	0	0	0	0
Total	0	0	0	0	0	0
West Leg						
Approach	390	99	489	294	75	369
Departure	179	46	225	101	26	127
Total	569	145	714	395	100	496
Total Approaches						
Approach	1,019	259	1,279	728	185	913
Departure	1,019	259	1,279	728	185	913
Total	2,038	518	2,558	1,456	370	1,826

Church of the Woods
Table B-7
Existing (2007) Peak Hour Volume Summary

	Saturday Peak Hour			Sunday Peak Hour		
	Existing Balanced PCE	Seasonal Adjustment	Total Adjusted Volume	Existing Balanced PCE	Seasonal Adjustment	Total Adjusted Volume
5 North Bay Road/SR-189						
NBL	0	0	0	0	0	0
NBT	0	0	0	0	0	0
NBR	0	0	0	0	0	0
SBL	106	27	133	57	14	71
SBT	0	0	0	0	0	0
SBR	211	54	265	185	47	232
EBL	224	57	281	132	34	166
EBT	247	63	310	151	38	189
EBR	0	0	0	0	0	0
WBL	0	0	0	0	0	0
WBT	170	43	213	148	38	186
WBR	80	20	100	62	16	78
North Leg						
Approach	317	81	398	242	62	303
Departure	304	77	381	194	49	244
Total	621	158	779	436	111	547
South Leg						
Approach	0	0	0	0	0	0
Departure	0	0	0	0	0	0
Total	0	0	0	0	0	0
East Leg						
Approach	250	64	313	210	53	264
Departure	353	90	443	208	53	260
Total	603	153	756	418	106	524
West Leg						
Approach	471	120	591	283	72	355
Departure	381	97	478	333	85	418
Total	852	217	1,069	616	157	773
Total Approaches						
Approach	1,038	264	1,302	735	187	922
Departure	1,038	264	1,302	735	187	922
Total	2,076	528	2,604	1,470	374	1,844

Church of the Woods
Table B-7
Existing (2007) Peak Hour Volume Summary

	Saturday Peak Hour			Sunday Peak Hour		
	Existing Balanced PCE	Seasonal Adjustment	Total Adjusted Volume	Existing Balanced PCE	Seasonal Adjustment	Total Adjusted Volume
6 Lake Gregory Drive/SR-189						
NBL	0	0	0	0	0	0
NBT	156	40	196	93	24	117
NBR	53	13	66	31	8	39
SBL	80	20	100	51	13	64
SBT	214	54	268	110	28	138
SBR	0	0	0	0	0	0
EBL	0	0	0	0	0	0
EBT	0	0	0	0	0	0
EBR	0	0	0	0	0	0
WBL	57	14	71	120	31	151
WBT	0	0	0	0	0	0
WBR	65	17	82	58	15	73
North Leg						
Approach	294	75	368	161	41	202
Departure	221	56	278	151	38	190
Total	515	131	646	312	79	392
South Leg						
Approach	209	53	262	124	32	156
Departure	271	69	339	230	58	289
Total	480	122	601	354	90	445
East Leg						
Approach	122	31	153	178	45	224
Departure	133	34	166	82	21	103
Total	255	65	319	260	66	327
West Leg						
Approach	0	0	0	0	0	0
Departure	0	0	0	0	0	0
Total	0	0	0	0	0	0
Total Approaches						
Approach	625	159	783	463	118	582
Departure	625	159	783	463	118	582
Total	1,250	318	1,566	926	235	1,164

Church of the Woods
Table B-7
Existing (2007) Peak Hour Volume Summary

	Saturday Peak Hour			Sunday Peak Hour		
	Existing Balanced PCE	Seasonal Adjustment	Total Adjusted Volume	Existing Balanced PCE	Seasonal Adjustment	Total Adjusted Volume
7 Lake Gregory Drive/SR-18						
NBL	0	0	0	0	0	0
NBT	0	0	0	0	0	0
NBR	0	0	0	0	0	0
SBL	199	51	250	109	28	137
SBT	0	0	0	0	0	0
SBR	72	18	90	121	31	152
EBL	90	23	113	43	11	54
EBT	327	83	410	185	47	232
EBR	0	0	0	0	0	0
WBL	0	0	0	0	0	0
WBT	293	74	367	332	84	416
WBR	119	30	149	81	21	102
North Leg						
Approach	271	69	340	230	58	289
Departure	209	53	262	124	32	156
Total	480	122	602	354	90	445
South Leg						
Approach	0	0	0	0	0	0
Departure	0	0	0	0	0	0
Total	0	0	0	0	0	0
East Leg						
Approach	412	105	516	413	105	518
Departure	526	134	660	294	75	369
Total	938	238	1,176	707	180	887
West Leg						
Approach	417	106	523	228	58	286
Departure	365	93	457	453	115	568
Total	782	199	980	681	173	854
Total Approaches						
Approach	1,100	280	1,379	871	221	1,093
Departure	1,100	280	1,379	871	221	1,093
Total	2,200	559	2,758	1,742	443	2,186

Church of the Woods
Table B-7
Existing (2007) Peak Hour Volume Summary

	Saturday Peak Hour			Sunday Peak Hour		
	Existing Balanced PCE	Seasonal Adjustment	Total Adjusted Volume	Existing Balanced PCE	Seasonal Adjustment	Total Adjusted Volume
8 Bear Springs Road/SR-18						
NBL	1	0	1	12	3	15
NBT	0	0	0	0	0	0
NBR	3	1	4	12	3	15
SBL	33	8	41	10	3	13
SBT	0	0	0	2	1	3
SBR	24	6	30	15	4	19
EBL	37	9	46	13	3	16
EBT	570	145	715	376	96	472
EBR	1	0	1	10	3	13
WBL	7	2	9	8	2	10
WBT	483	123	606	374	95	469
WBR	20	5	25	11	3	14
North Leg						
Approach	57	14	71	27	7	35
Departure	57	14	71	24	6	30
Total	114	29	142	51	13	65
South Leg						
Approach	4	1	5	24	6	30
Departure	8	2	10	20	5	26
Total	12	3	15	44	11	56
East Leg						
Approach	510	130	640	393	100	493
Departure	606	154	760	398	101	500
Total	1,116	284	1,400	791	201	993
West Leg						
Approach	608	155	762	399	101	501
Departure	508	129	637	401	102	503
Total	1,116	284	1,399	800	203	1,004
Total Approaches						
Approach	1,179	300	1,478	843	214	1,059
Departure	1,179	300	1,478	843	214	1,059
Total	2,358	599	2,956	1,686	429	2,118

Church of the Woods
Table B-7
Existing (2007) Peak Hour Volume Summary

	Saturday Peak Hour			Sunday Peak Hour		
	Existing Balanced PCE	Seasonal Adjustment	Total Adjusted Volume	Existing Balanced PCE	Seasonal Adjustment	Total Adjusted Volume
9 Project Access/SR-18						
NBL	0	0	0	0	0	0
NBT	0	0	0	0	0	0
NBR	0	0	0	0	0	0
SBL	0	0	0	0	0	0
SBT	0	0	0	0	0	0
SBR	0	0	0	0	0	0
EBL	0	0	0	0	0	0
EBT	613	156	769	346	88	434
EBR	0	0	0	0	0	0
WBL	0	0	0	0	0	0
WBT	488	124	612	461	117	578
WBR	0	0	0	0	0	0
North Leg						
Approach	0	0	0	0	0	0
Departure	0	0	0	0	0	0
Total	0	0	0	0	0	0
South Leg						
Approach	0	0	0	0	0	0
Departure	0	0	0	0	0	0
Total	0	0	0	0	0	0
East Leg						
Approach	488	124	612	461	117	578
Departure	613	156	769	346	88	434
Total	1,101	280	1,381	807	205	1,012
West Leg						
Approach	613	156	769	346	88	434
Departure	488	124	612	461	117	578
Total	1,101	280	1,381	807	205	1,012
Total Approaches						
Approach	1,101	280	1,381	807	205	1,012
Departure	1,101	280	1,381	807	205	1,012
Total	2,202	560	2,762	1,614	410	2,024

Church of the Woods
Table B-7
Existing (2007) Peak Hour Volume Summary

	Saturday Peak Hour			Sunday Peak Hour		
	Existing Balanced PCE	Seasonal Adjustment	Total Adjusted Volume	Existing Balanced PCE	Seasonal Adjustment	Total Adjusted Volume
10 Daley Canyon Road/SR-18						
NBL	0	0	0	0	0	0
NBT	0	0	0	0	0	0
NBR	0	0	0	0	0	0
SBL	0	0	0	0	0	0
SBT	0	0	0	0	0	0
SBR	224	57	281	227	58	285
EBL	242	62	304	136	35	171
EBT	372	95	467	210	53	263
EBR	0	0	0	0	0	0
WBL	0	0	0	0	0	0
WBT	264	67	331	234	59	293
WBR	0	0	0	0	0	0
North Leg						
Approach	224	57	281	227	58	285
Departure	242	62	304	136	35	171
Total	466	118	585	363	92	456
South Leg						
Approach	0	0	0	0	0	0
Departure	0	0	0	0	0	0
Total	0	0	0	0	0	0
East Leg						
Approach	264	67	331	234	59	293
Departure	372	95	467	210	53	263
Total	636	162	798	444	113	556
West Leg						
Approach	614	156	771	346	88	434
Departure	488	124	612	461	117	578
Total	1,102	280	1,383	807	205	1,012
Total Approaches						
Approach	1,102	280	1,383	807	205	1,012
Departure	1,102	280	1,383	807	205	1,012
Total	2,204	560	2,766	1,614	410	2,024

Church of the Woods
Table B-7
Existing (2007) Peak Hour Volume Summary

	Saturday Peak Hour			Sunday Peak Hour		
	Existing Balanced PCE	Seasonal Adjustment	Total Adjusted Volume	Existing Balanced PCE	Seasonal Adjustment	Total Adjusted Volume
11 Daley Cnyn Rd/Daley Cnyn Access						
NBL	0	0	0	0	0	0
NBT	242	62	304	136	35	171
NBR	0	0	0	0	0	0
SBL	122	31	153	135	34	169
SBT	224	57	281	227	58	285
SBR	0	0	0	0	0	0
EBL	0	0	0	0	0	0
EBT	0	0	0	0	0	0
EBR	0	0	0	0	0	0
WBL	0	0	0	0	0	0
WBT	0	0	0	0	0	0
WBR	122	31	153	111	28	139
North Leg						
Approach	346	88	434	362	92	454
Departure	364	93	457	247	63	310
Total	710	181	891	609	155	764
South Leg						
Approach	242	62	304	136	35	171
Departure	224	57	281	227	58	285
Total	466	118	585	363	92	456
East Leg						
Approach	122	31	153	111	28	139
Departure	122	31	153	135	34	169
Total	244	62	306	246	63	308
West Leg						
Approach	0	0	0	0	0	0
Departure	0	0	0	0	0	0
Total	0	0	0	0	0	0
Total Approaches						
Approach	710	181	891	609	155	764
Departure	710	181	891	609	155	764
Total	1,420	361	1,782	1,218	310	1,528

Church of the Woods
Table B-7
Existing (2007) Peak Hour Volume Summary

	Saturday Peak Hour			Sunday Peak Hour		
	Existing Balanced PCE	Seasonal Adjustment	Total Adjusted Volume	Existing Balanced PCE	Seasonal Adjustment	Total Adjusted Volume
12 Daley Canyon Access Road/SR-18						
NBL	0	0	0	0	0	0
NBT	0	0	0	0	0	0
NBR	0	0	0	0	0	0
SBL	122	31	153	135	34	169
SBT	0	0	0	0	0	0
SBR	0	0	0	0	0	0
EBL	0	0	0	0	0	0
EBT	372	95	467	210	53	263
EBR	0	0	0	0	0	0
WBL	0	0	0	0	0	0
WBT	264	67	331	234	59	293
WBR	122	31	153	111	28	139
North Leg						
Approach	122	31	153	135	34	169
Departure	122	31	153	111	28	139
Total	244	62	306	246	63	308
South Leg						
Approach	0	0	0	0	0	0
Departure	0	0	0	0	0	0
Total	0	0	0	0	0	0
East Leg						
Approach	386	98	484	345	88	432
Departure	494	126	620	345	88	432
Total	880	224	1,104	690	175	864
West Leg						
Approach	372	95	467	210	53	263
Departure	264	67	331	234	59	293
Total	636	162	798	444	113	556
Total Approaches						
Approach	880	224	1,104	690	175	864
Departure	880	224	1,104	690	175	864
Total	1,760	447	2,208	1,380	351	1,728

Church of the Woods
Table B-7
Existing (2007) Peak Hour Volume Summary

	Saturday Peak Hour			Sunday Peak Hour		
	Existing Balanced PCE	Seasonal Adjustment	Total Adjusted Volume	Existing Balanced PCE	Seasonal Adjustment	Total Adjusted Volume
13 SR-173/SR-18						
NBL	0	0	0	0	0	0
NBT	0	0	0	0	0	0
NBR	0	0	0	0	0	0
SBL	68	17	85	36	9	45
SBT	0	0	0	0	0	0
SBR	114	29	143	110	28	138
EBL	197	50	247	172	44	216
EBT	233	59	292	125	32	157
EBR	0	0	0	0	0	0
WBL	0	0	0	0	0	0
WBT	202	51	253	133	34	167
WBR	72	18	90	93	24	117
North Leg						
Approach	182	46	228	146	37	183
Departure	269	68	337	265	67	333
Total	451	115	565	411	104	516
South Leg						
Approach	0	0	0	0	0	0
Departure	0	0	0	0	0	0
Total	0	0	0	0	0	0
East Leg						
Approach	274	70	343	226	57	284
Departure	301	77	377	161	41	202
Total	575	146	720	387	98	486
West Leg						
Approach	430	109	539	297	76	373
Departure	316	80	396	243	62	305
Total	746	190	935	540	137	678
Total Approaches						
Approach	886	225	1,110	669	170	840
Departure	886	225	1,110	669	170	840
Total	1,772	451	2,220	1,338	340	1,680

Church of the Woods
Table B-8 - Calculation of Regional Growth Rates

		Sunday 2000 AM			Sunday 2030 AM			Growth Rate (From 2007 Counts)			
		Eastbound	Westbound	Total	Eastbound	Westbound	Total	Annual	to 2009	to 2013	to 2030
Highway 18											
	west of Highway 189	5,538	5,493	11,031	6,536	7,184	13,720	0.73%	1.46%	4.46%	18.20%
Highway 18											
	west of Daley Canyon Road	5,677	5,671	11,348	6,560	4,593	11,153	-0.06%	-0.12%	-0.35%	-1.32%
	west of Highway 173	6,029	5,916	11,945	7,515	7,930	15,445	0.86%	1.73%	5.27%	21.78%
	east of Highway 173	6,702	6,405	13,107	9,965	10,171	20,136	1.44%	2.90%	8.97%	38.98%
	Total/Weighted Average	18,408	17,992	36,400	24,040	22,694	46,734	0.84%	1.68%	5.13%	21.12%
Highway 189										-1	
	west of North Road	1,825	1,790	3,615	3,962	5,098	9,060	3.11%	6.32%	20.17%	102.26%
	west of Daley Canyon Road	488	410	898	441	521	962	0.23%	0.46%	1.39%	5.42%
	west of North Bay Road	2,447	2,338	4,785	5,040	5,159	10,199	2.55%	5.17%	16.34%	78.64%
	Total/Weighted Average	4,760	4,538	9,298	9,443	10,778	20,221	2.62%	5.32%	16.81%	81.42%
E/W Overall				**56,729**			**80,675**	**1.18%**	**2.38%**	**7.30%**	**30.99%**

		Sunday 2000 AM			Sunday 2030 AM			Growth Rate			
		Northbound	Southbound	Total	Northbound	Southbound	Total	Annual	to 2009	to 2013	to 2030
North Road											
	north of Highway 189	250	278	528	2,427	808	3,235	6.23%	12.85%	43.70%	301.38%
Grass Valley Road											
	north of Highway 189	321	344	665	483	509	992	1.34%	2.70%	8.33%	35.88%
North Bay Road											
	north of Highway 189	799	884	1,683	1,151	1,288	2,439	1.24%	2.50%	7.70%	32.90%
Daley Canyon Road											
	north of Highway 18	73	116	189	430	364	794	4.90%	10.04%	33.25%	200.54%
Highway 173											
	south of Highway 189	682	779	1,461	1,534	1,689	3,223	2.67%	5.42%	17.14%	83.41%
	north of Highway 18	739	877	1,616	3,259	3,457	6,716	4.86%	9.96%	32.96%	198.07%
	Total/Weighted Average	1,421	1,656	3,077	4,793	5,146	9,939	3.99%	8.13%	26.43%	145.70%
N/S Overall				**6,142**			**17,399**	**3.53%**	**7.19%**	**23.15%**	**122.18%**
Overall				**62,871**			**98,074**	**1.49%**	**3.01%**	**9.30%**	**40.62%**

Table B-9 - Forecast CTP Traffic Model Peak Hour Link Volume Worksheet
(Year 2009 Base Conditions)

		Existing Ground Count		Existing Link Volume	Growth Rate	"New" Link Volume	Future Link Volume	Balanced Link Volume
1	**North Road/SR-189**							
Saturday Peak Hour								
Northbound	Left	0	Approach	0	7.2%	0	0	0
	Through	0	Departure	0	7.2%	0	0	0
	Right	0						
Southbound	Left	162	Approach	211	7.2%	15	226	222
	Through	0	Departure	170	7.2%	12	182	179
	Right	49						
Eastbound	Left	36	Approach	198	2.4%	5	203	204
	Through	162	Departure	201	2.4%	5	206	208
	Right	0						
Westbound	Left	0	Approach	286	2.4%	7	293	297
	Through	152	Departure	324	2.4%	8	332	336
	Right	134						
Sunday Peak Hour								
Northbound	Left	0	Approach	0	7.2%	0	0	0
	Through	0	Departure	0	7.2%	0	0	0
	Right	0						
Southbound	Left	87	Approach	137	7.2%	10	147	144
	Through	0	Departure	110	7.2%	8	118	116
	Right	50						
Eastbound	Left	35	Approach	114	2.4%	3	117	118
	Through	79	Departure	195	2.4%	5	200	201
	Right	0						
Westbound	Left	0	Approach	220	2.4%	5	225	227
	Through	145	Departure	166	2.4%	4	170	172
	Right	75						

Table B-9 - Forecast CTP Traffic Model Peak Hour Link Volume Worksheet
(Year 2009 Base Conditions)

		Existing Ground Count		Existing Link Volume	Growth Rate	"New" Link Volume	Future Link Volume	Balanced Link Volume
2	**Bear Springs Road/SR-189**							
Saturday Peak Hour								
Northbound	Left	20	Approach	47	7.2%	3	50	50
	Through	13	Departure	51	7.2%	4	55	55
	Right	14						
Southbound	Left	34	Approach	103	7.2%	7	110	109
	Through	10	Departure	107	7.2%	8	115	113
	Right	59						
Eastbound	Left	63	Approach	308	2.4%	7	315	318
	Through	214	Departure	287	2.4%	7	294	296
	Right	31						
Westbound	Left	10	Approach	249	2.4%	6	255	257
	Through	208	Departure	262	2.4%	6	268	270
	Right	31						
Sunday Peak Hour								
Northbound	Left	11	Approach	33	7.2%	2	35	36
	Through	13	Departure	41	7.2%	3	44	44
	Right	9						
Southbound	Left	33	Approach	99	7.2%	7	106	105
	Through	10	Departure	71	7.2%	5	76	75
	Right	56						
Eastbound	Left	40	Approach	202	2.4%	5	207	208
	Through	142	Departure	243	2.4%	6	249	251
	Right	20						
Westbound	Left	11	Approach	205	2.4%	5	210	211
	Through	176	Departure	184	2.4%	4	188	190
	Right	18						

Table B-9 - Forecast CTP Traffic Model Peak Hour Link Volume Worksheet
(Year 2009 Base Conditions)

		Existing Ground Count		Existing Link Volume	Growth Rate	"New" Link Volume	Future Link Volume	Balanced Link Volume
3	**Grass Valley Road/SR-189**							
Saturday Peak Hour								
Northbound	Left	0	Approach	0	7.2%	0	0	0
	Through	0	Departure	0	7.2%	0	0	0
	Right	0						
Southbound	Left	256	Approach	488	7.2%	35	523	512
	Through	0	Departure	257	7.2%	18	275	270
	Right	232						
Eastbound	Left	114	Approach	320	2.4%	8	328	331
	Through	206	Departure	316	2.4%	8	324	330
	Right	0						
Westbound	Left	0	Approach	227	2.4%	5	232	236
	Through	84	Departure	462	2.4%	11	473	479
	Right	143						
Sunday Peak Hour								
Northbound	Left	0	Approach	0	7.2%	0	0	0
	Through	0	Departure	0	7.2%	0	0	0
	Right	0						
Southbound	Left	228	Approach	385	7.2%	28	413	404
	Through	0	Departure	148	7.2%	11	159	156
	Right	157						
Eastbound	Left	64	Approach	220	2.4%	5	225	228
	Through	156	Departure	210	2.4%	5	215	219
	Right	0						
Westbound	Left	0	Approach	137	2.4%	3	140	142
	Through	53	Departure	384	2.4%	9	393	399
	Right	84						

Table B-9 - Forecast CTP Traffic Model Peak Hour Link Volume Worksheet
(Year 2009 Base Conditions)

		Existing Ground Count		Existing Link Volume	Growth Rate	"New" Link Volume	Future Link Volume	Balanced Link Volume
4	**Daley Canyon Road/SR-189**							
Saturday Peak Hour								
Northbound	Left	151	Approach	475	7.2%	34	509	499
	Through	324	Departure	424	7.2%	30	454	445
	Right	0						
Southbound	Left	0	Approach	315	2.4%	7	322	329
	Through	241	Departure	630	2.4%	15	645	653
	Right	74						
Eastbound	Left	306	Approach	489	2.4%	12	501	505
	Through	0	Departure	225	2.4%	5	230	235
	Right	183						
Westbound	Left	0	Approach	0	2.4%	0	0	0
	Through	0	Departure	0	2.4%	0	0	0
	Right	0						
Sunday Peak Hour								
Northbound	Left	88	Approach	242	7.2%	17	259	254
	Through	154	Departure	449	7.2%	32	481	471
	Right	0						
Southbound	Left	0	Approach	302	2.4%	7	309	316
	Through	263	Departure	337	2.4%	8	345	349
	Right	39						
Eastbound	Left	183	Approach	369	2.4%	9	378	382
	Through	0	Departure	127	2.4%	3	130	132
	Right	186						
Westbound	Left	0	Approach	0	2.4%	0	0	0
	Through	0	Departure	0	2.4%	0	0	0
	Right	0						

Table B-9 - Forecast CTP Traffic Model Peak Hour Link Volume Worksheet
(Year 2009 Base Conditions)

		Existing Ground Count		Existing Link Volume	Growth Rate	"New" Link Volume	Future Link Volume	Balanced Link Volume
5	**North Bay Road/SR-189**							
Saturday Peak Hour								
Northbound	Left	0	Approach	0	7.2%	0	0	0
	Through	0	Departure	0	7.2%	0	0	0
	Right	0						
Southbound	Left	133	Approach	398	7.2%	29	427	418
	Through	0	Departure	381	7.2%	27	408	400
	Right	265						
Eastbound	Left	281	Approach	591	2.4%	14	605	612
	Through	310	Departure	478	2.4%	11	489	496
	Right	0						
Westbound	Left	0	Approach	313	2.4%	7	320	323
	Through	213	Departure	443	2.4%	11	454	457
	Right	100						
Sunday Peak Hour								
Northbound	Left	0	Approach	0	7.2%	0	0	0
	Through	0	Departure	0	7.2%	0	0	0
	Right	0						
Southbound	Left	71	Approach	303	7.2%	22	325	319
	Through	0	Departure	244	7.2%	18	262	256
	Right	232						
Eastbound	Left	166	Approach	355	2.4%	8	363	367
	Through	189	Departure	418	2.4%	10	428	434
	Right	0						
Westbound	Left	0	Approach	264	2.4%	6	270	272
	Through	186	Departure	260	2.4%	6	266	268
	Right	78						

Table B-9 - Forecast CTP Traffic Model Peak Hour Link Volume Worksheet
(Year 2009 Base Conditions)

		Existing Ground Count		Existing Link Volume	Growth Rate	"New" Link Volume	Future Link Volume	Balanced Link Volume
6	**Lake Gregory Drive/SR-189**							
Saturday Peak Hour								
Northbound	Left	0	Approach	262	2.4%	6	268	268
	Through	196	Departure	339	2.4%	8	347	347
	Right	66						
Southbound	Left	100	Approach	368	2.4%	9	377	377
	Through	268	Departure	278	2.4%	7	285	285
	Right	0						
Eastbound	Left	0	Approach	0	2.4%	0	0	0
	Through	0	Departure	0	2.4%	0	0	0
	Right	0						
Westbound	Left	71	Approach	153	2.4%	4	157	157
	Through	0	Departure	166	2.4%	4	170	170
	Right	82						
Sunday Peak Hour								
Northbound	Left	0	Approach	156	2.4%	4	160	160
	Through	117	Departure	289	2.4%	7	296	296
	Right	39						
Southbound	Left	64	Approach	202	2.4%	5	207	207
	Through	138	Departure	190	2.4%	5	195	195
	Right	0						
Eastbound	Left	0	Approach	0	2.4%	0	0	0
	Through	0	Departure	0	2.4%	0	0	0
	Right	0						
Westbound	Left	151	Approach	224	2.4%	5	229	229
	Through	0	Departure	103	2.4%	2	105	105
	Right	73						

Table B-9 - Forecast CTP Traffic Model Peak Hour Link Volume Worksheet
(Year 2009 Base Conditions)

		Existing Ground Count		Existing Link Volume	Growth Rate	"New" Link Volume	Future Link Volume	Balanced Link Volume
7	**Lake Gregory Drive/SR-18**							
Saturday Peak Hour								
Northbound	Left	0	Approach	0	2.4%	0	0	0
	Through	0	Departure	0	2.4%	0	0	0
	Right	0						
Southbound	Left	250	Approach	340	2.4%	8	348	348
	Through	0	Departure	262	2.4%	6	268	268
	Right	90						
Eastbound	Left	113	Approach	523	2.4%	12	535	535
	Through	410	Departure	457	2.4%	11	468	468
	Right	0						
Westbound	Left	0	Approach	516	2.4%	12	528	528
	Through	367	Departure	660	2.4%	16	676	676
	Right	149						
Sunday Peak Hour								
Northbound	Left	0	Approach	0	2.4%	0	0	0
	Through	0	Departure	0	2.4%	0	0	0
	Right	0						
Southbound	Left	137	Approach	289	2.4%	7	296	296
	Through	0	Departure	156	2.4%	4	160	160
	Right	152						
Eastbound	Left	54	Approach	286	2.4%	7	293	293
	Through	232	Departure	568	2.4%	13	581	581
	Right	0						
Westbound	Left	0	Approach	518	2.4%	12	530	530
	Through	416	Departure	369	2.4%	9	378	378
	Right	102						

Table B-9 - Forecast CTP Traffic Model Peak Hour Link Volume Worksheet
(Year 2009 Base Conditions)

		Existing Ground Count		Existing Link Volume	Growth Rate	"New" Link Volume	Future Link Volume	Balanced Link Volume
8	**Bear Springs Road/SR-18**							
Saturday Peak Hour								
Northbound	Left	1	Approach	5	7.2%	0	5	5
	Through	0	Departure	10	7.2%	1	11	11
	Right	4						
Southbound	Left	41	Approach	71	7.2%	5	76	75
	Through	0	Departure	71	7.2%	5	76	75
	Right	30						
Eastbound	Left	46	Approach	762	2.4%	18	780	781
	Through	715	Departure	637	2.4%	15	652	653
	Right	1						
Westbound	Left	9	Approach	640	2.4%	15	655	657
	Through	606	Departure	760	2.4%	18	778	779
	Right	25						
Sunday Peak Hour								
Northbound	Left	15	Approach	30	7.2%	2	32	32
	Through	0	Departure	26	7.2%	2	28	28
	Right	15						
Southbound	Left	13	Approach	35	7.2%	3	38	37
	Through	3	Departure	30	7.2%	2	32	32
	Right	19						
Eastbound	Left	16	Approach	501	2.4%	12	513	514
	Through	472	Departure	503	2.4%	12	515	516
	Right	13						
Westbound	Left	10	Approach	493	2.4%	12	505	506
	Through	469	Departure	500	2.4%	12	512	513
	Right	14						

Table B-9 - Forecast CTP Traffic Model Peak Hour Link Volume Worksheet
(Year 2009 Base Conditions)

10/11/12 Daley Canyon Road/Daley Canyon Access Road/SR-18 Combined

Saturday Peak Hour

		Existing Ground Count		Existing Link Volume	Growth Rate	"New" Link Volume	Future Link Volume	Balanced Link Volume
Northbound	Left	0	Approach	0	7.2%	0	0	0
	Through	0	Departure	0	7.2%	0	0	0
	Right	0						
Southbound	Left	153	Approach	434	7.2%	31	465	456
	Through	0	Departure	457	7.2%	33	490	480
	Right	281						
Eastbound	Left	304	Approach	771	2.4%	18	789	797
	Through	467	Departure	612	2.4%	15	627	634
	Right	0						
Westbound	Left	0	Approach	484	2.4%	11	495	500
	Through	331	Departure	620	2.4%	15	635	639
	Right	153						

Sunday Peak Hour

Northbound	Left	0	Approach	0	7.2%	0	0	0
	Through	0	Departure	0	7.2%	0	0	0
	Right	0						
Southbound	Left	169	Approach	454	7.2%	33	487	476
	Through	0	Departure	310	7.2%	22	332	325
	Right	285						
Eastbound	Left	171	Approach	434	2.4%	10	444	448
	Through	263	Departure	578	2.4%	14	592	599
	Right	0						
Westbound	Left	0	Approach	432	2.4%	10	442	446
	Through	293	Departure	432	2.4%	10	442	446
	Right	139						

Table B-9 - Forecast CTP Traffic Model Peak Hour Link Volume Worksheet
(Year 2009 Base Conditions)

		Existing Ground Count		Existing Link Volume	Growth Rate	"New" Link Volume	Future Link Volume	Balanced Link Volume
13 SR-173/SR-18								
Saturday Peak Hour								
Northbound	Left	0	Approach	0	7.2%	0	0	0
	Through	0	Departure	0	7.2%	0	0	0
	Right	0						
Southbound	Left	85	Approach	228	7.2%	16	244	239
	Through	0	Departure	337	7.2%	24	361	353
	Right	143						
Eastbound	Left	247	Approach	539	2.4%	13	552	558
	Through	292	Departure	396	2.4%	9	405	409
	Right	0						
Westbound	Left	0	Approach	343	2.4%	8	351	353
	Through	253	Departure	377	2.4%	9	386	388
	Right	90						
Sunday Peak Hour								
Northbound	Left	0	Approach	0	7.2%	0	0	0
	Through	0	Departure	0	7.2%	0	0	0
	Right	0						
Southbound	Left	45	Approach	183	7.2%	13	196	192
	Through	0	Departure	333	7.2%	24	357	350
	Right	138						
Eastbound	Left	216	Approach	373	2.4%	9	382	388
	Through	157	Departure	305	2.4%	7	312	316
	Right	0						
Westbound	Left	0	Approach	284	2.4%	7	291	294
	Through	167	Departure	202	2.4%	5	207	208
	Right	117						

Table B-10 - Calculation of Future Directional Turn Volumes From Future Directional Link Volumes (NCHRP 255)
Year 2009 Without Project Conditions

Approach Direction		Base Year Count	Forecast Future Year Link Volume		Forecast Future Year Turn Volume	
1 North Road/SR-189						
Saturday Peak Hour						
Northbound	Left	0	Approach	0	Left	0
	Through	0	Departure	0	Through	0
	Right	0			Right	0
Southbound	Left	162	Approach	222	Left	170
	Through	0	Departure	179	Through	0
	Right	49			Right	52
Eastbound	Left	36	Approach	204	Left	38
	Through	162	Departure	208	Through	166
	Right	0			Right	0
Westbound	Left	0	Approach	297	Left	0
	Through	152	Departure	336	Through	156
	Right	134			Right	141
Sunday Peak Hour						
Northbound	Left	0	Approach	0	Left	0
	Through	0	Departure	0	Through	0
	Right	0			Right	0
Southbound	Left	87	Approach	144	Left	91
	Through	0	Departure	116	Through	0
	Right	50			Right	53
Eastbound	Left	35	Approach	118	Left	37
	Through	79	Departure	201	Through	81
	Right	0			Right	0
Westbound	Left	0	Approach	227	Left	0
	Through	145	Departure	172	Through	148
	Right	75			Right	79

Table B-10 - Calculation of Future Directional Turn Volumes From Future Directional Link Volumes (NCHRP 255)
Year 2009 Without Project Conditions

Approach Direction		Base Year Count	Forecast Future Year Link Volume		Forecast Future Year Turn Volume	
2	**Bear Springs Road/SR-189**					
Saturday Peak Hour						
Northbound	Left	20	Approach	50	Left	21
	Through	13	Departure	55	Through	14
	Right	14			Right	15
Southbound	Left	34	Approach	109	Left	36
	Through	10	Departure	113	Through	11
	Right	59			Right	62
Eastbound	Left	63	Approach	318	Left	66
	Through	214	Departure	296	Through	219
	Right	31			Right	33
Westbound	Left	10	Approach	257	Left	11
	Through	208	Departure	270	Through	213
	Right	31			Right	33
Sunday Peak Hour						
Northbound	Left	11	Approach	36	Left	12
	Through	13	Departure	44	Through	14
	Right	9			Right	10
Southbound	Left	33	Approach	105	Left	35
	Through	10	Departure	75	Through	11
	Right	56			Right	59
Eastbound	Left	40	Approach	208	Left	42
	Through	142	Departure	251	Through	145
	Right	20			Right	21
Westbound	Left	11	Approach	211	Left	12
	Through	176	Departure	190	Through	180
	Right	18			Right	19

Table B-10 - Calculation of Future Directional Turn Volumes From Future Directional Link Volumes (NCHRP 255)
Year 2009 Without Project Conditions

Approach Direction		Base Year Count	Forecast Future Year Link Volume		Forecast Future Year Turn Volume	
3 Grass Valley Road/SR-189						
Saturday Peak Hour						
Northbound	Left	0	Approach	0	Left	0
	Through	0	Departure	0	Through	0
	Right	0			Right	0
Southbound	Left	256	Approach	512	Left	268
	Through	0	Departure	270	Through	0
	Right	232			Right	244
Eastbound	Left	114	Approach	331	Left	120
	Through	206	Departure	330	Through	211
	Right	0			Right	0
Westbound	Left	0	Approach	236	Left	0
	Through	84	Departure	479	Through	86
	Right	143			Right	150
Sunday Peak Hour						
Northbound	Left	0	Approach	0	Left	0
	Through	0	Departure	0	Through	0
	Right	0			Right	0
Southbound	Left	228	Approach	404	Left	239
	Through	0	Departure	156	Through	0
	Right	157			Right	165
Eastbound	Left	64	Approach	228	Left	68
	Through	156	Departure	219	Through	160
	Right	0			Right	0
Westbound	Left	0	Approach	142	Left	0
	Through	53	Departure	399	Through	54
	Right	84			Right	88

Table B-10 - Calculation of Future Directional Turn Volumes From Future Directional Link Volumes (NCHRP 255)
Year 2009 Without Project Conditions

Approach Direction		Base Year Count	Forecast Future Year Link Volume		Forecast Future Year Turn Volume	
4	**Daley Canyon Road/SR-189**					
Saturday Peak Hour						
Northbound	Left	151	Approach	499	Left	159
	Through	324	Departure	445	Through	340
	Right	0			Right	0
Southbound	Left	0	Approach	329	Left	0
	Through	241	Departure	653	Through	253
	Right	74			Right	76
Eastbound	Left	306	Approach	505	Left	313
	Through	0	Departure	235	Through	0
	Right	183			Right	192
Westbound	Left	0	Approach	0	Left	0
	Through	0	Departure	0	Through	0
	Right	0			Right	0
Sunday Peak Hour						
Northbound	Left	88	Approach	254	Left	92
	Through	154	Departure	471	Through	162
	Right	0			Right	0
Southbound	Left	0	Approach	316	Left	0
	Through	263	Departure	349	Through	276
	Right	39			Right	40
Eastbound	Left	183	Approach	382	Left	187
	Through	0	Departure	132	Through	0
	Right	186			Right	195
Westbound	Left	0	Approach	0	Left	0
	Through	0	Departure	0	Through	0
	Right	0			Right	0

Table B-10 - Calculation of Future Directional Turn Volumes From Future Directional Link Volumes (NCHRP 255)
Year 2009 Without Project Conditions

Approach Direction		Base Year Count	Forecast Future Year Link Volume		Forecast Future Year Turn Volume	
5 North Bay Road/SR-189						
Saturday Peak Hour						
Northbound	Left	0	Approach	0	Left	0
	Through	0	Departure	0	Through	0
	Right	0			Right	0
Southbound	Left	133	Approach	418	Left	140
	Through	0	Departure	400	Through	0
	Right	265			Right	278
Eastbound	Left	281	Approach	612	Left	295
	Through	310	Departure	496	Through	317
	Right	0			Right	0
Westbound	Left	0	Approach	323	Left	0
	Through	213	Departure	457	Through	218
	Right	100			Right	105
Sunday Peak Hour						
Northbound	Left	0	Approach	0	Left	0
	Through	0	Departure	0	Through	0
	Right	0			Right	0
Southbound	Left	71	Approach	319	Left	75
	Through	0	Departure	256	Through	0
	Right	232			Right	244
Eastbound	Left	166	Approach	367	Left	174
	Through	189	Departure	434	Through	193
	Right	0			Right	0
Westbound	Left	0	Approach	272	Left	0
	Through	186	Departure	268	Through	190
	Right	78			Right	82

Table B-10 - Calculation of Future Directional Turn Volumes From Future Directional Link Volumes (NCHRP 255)
Year 2009 Without Project Conditions

Approach Direction		Base Year Count	Forecast Future Year Link Volume		Forecast Future Year Turn Volume	
6 Lake Gregory Drive/SR-189						
Saturday Peak Hour						
Northbound	Left	0	Approach	268	Left	0
	Through	196	Departure	347	Through	201
	Right	66			Right	67
Southbound	Left	100	Approach	377	Left	103
	Through	268	Departure	285	Through	274
	Right	0			Right	0
Eastbound	Left	0	Approach	0	Left	0
	Through	0	Departure	0	Through	0
	Right	0			Right	0
Westbound	Left	71	Approach	157	Left	73
	Through	0	Departure	170	Through	0
	Right	82			Right	84
Sunday Peak Hour						
Northbound	Left	0	Approach	160	Left	0
	Through	117	Departure	296	Through	120
	Right	39			Right	40
Southbound	Left	64	Approach	207	Left	65
	Through	138	Departure	195	Through	142
	Right	0			Right	0
Eastbound	Left	0	Approach	0	Left	0
	Through	0	Departure	0	Through	0
	Right	0			Right	0
Westbound	Left	151	Approach	229	Left	154
	Through	0	Departure	105	Through	0
	Right	73			Right	75

Table B-10 - Calculation of Future Directional Turn Volumes From Future Directional Link Volumes (NCHRP 255)
Year 2009 Without Project Conditions

Approach Direction		Base Year Count	Forecast Future Year Link Volume		Forecast Future Year Turn Volume	
7 Lake Gregory Drive/SR-18						
Saturday Peak Hour						
Northbound	Left	0	Approach	0	Left	0
	Through	0	Departure	0	Through	0
	Right	0			Right	0
Southbound	Left	250	Approach	348	Left	256
	Through	0	Departure	268	Through	0
	Right	90			Right	92
Eastbound	Left	113	Approach	535	Left	116
	Through	410	Departure	468	Through	420
	Right	0			Right	0
Westbound	Left	0	Approach	528	Left	0
	Through	367	Departure	676	Through	376
	Right	149			Right	152
Sunday Peak Hour						
Northbound	Left	0	Approach	0	Left	0
	Through	0	Departure	0	Through	0
	Right	0			Right	0
Southbound	Left	137	Approach	296	Left	140
	Through	0	Departure	160	Through	0
	Right	152			Right	156
Eastbound	Left	54	Approach	293	Left	55
	Through	232	Departure	581	Through	238
	Right	0			Right	0
Westbound	Left	0	Approach	530	Left	0
	Through	416	Departure	378	Through	425
	Right	102			Right	105

Table B-10 - Calculation of Future Directional Turn Volumes From Future Directional Link Volumes (NCHRP 255)
Year 2009 Without Project Conditions

Approach Direction		Base Year Count	Forecast Future Year Link Volume		Forecast Future Year Turn Volume	
8 Bear Springs Road/SR-18						
Saturday Peak Hour						
Northbound	Left	1	Approach	5	Left	1
	Through	0	Departure	11	Through	0
	Right	4			Right	4
Southbound	Left	41	Approach	75	Left	43
	Through	0	Departure	75	Through	0
	Right	30			Right	32
Eastbound	Left	46	Approach	781	Left	48
	Through	715	Departure	653	Through	732
	Right	1			Right	1
Westbound	Left	9	Approach	657	Left	10
	Through	606	Departure	779	Through	620
	Right	25			Right	27
Sunday Peak Hour						
Northbound	Left	15	Approach	32	Left	16
	Through	0	Departure	28	Through	0
	Right	15			Right	16
Southbound	Left	13	Approach	37	Left	14
	Through	3	Departure	32	Through	3
	Right	19			Right	20
Eastbound	Left	16	Approach	514	Left	17
	Through	472	Departure	516	Through	483
	Right	13			Right	14
Westbound	Left	10	Approach	506	Left	11
	Through	469	Departure	513	Through	480
	Right	14			Right	15

Table B-10 - Calculation of Future Directional Turn Volumes From Future Directional Link Volumes (NCHRP 255)
Year 2009 Without Project Conditions

Approach Direction		Base Year Count	Forecast Future Year Link Volume		Forecast Future Year Turn Volume	
10/11/12 Daley Canyon Road/Daley Canyon Access Road/SR-18 Combined						
Saturday Peak Hour						
Northbound	Left	0	Approach	0	Left	0
	Through	0	Departure	0	Through	0
	Right	0			Right	0
Southbound	Left	153	Approach	456	Left	161
	Through	0	Departure	480	Through	0
	Right	281			Right	295
Eastbound	Left	304	Approach	797	Left	319
	Through	467	Departure	634	Through	478
	Right	0			Right	0
Westbound	Left	0	Approach	500	Left	0
	Through	331	Departure	639	Through	339
	Right	153			Right	161
Sunday Peak Hour						
Northbound	Left	0	Approach	0	Left	0
	Through	0	Departure	0	Through	0
	Right	0			Right	0
Southbound	Left	169	Approach	476	Left	177
	Through	0	Departure	325	Through	0
	Right	285			Right	299
Eastbound	Left	171	Approach	448	Left	179
	Through	263	Departure	599	Through	269
	Right	0			Right	0
Westbound	Left	0	Approach	446	Left	0
	Through	293	Departure	446	Through	300
	Right	139			Right	146

Table B-10 - Calculation of Future Directional Turn Volumes From Future Directional Link Volumes (NCHRP 255)
Year 2009 Without Project Conditions

Approach Direction		Base Year Count	Forecast Future Year Link Volume		Forecast Future Year Turn Volume	
13 SR-173/SR-18						
Saturday Peak Hour						
Northbound	Left	0	Approach	0	Left	0
	Through	0	Departure	0	Through	0
	Right	0			Right	0
Southbound	Left	85	Approach	239	Left	89
	Through	0	Departure	353	Through	0
	Right	143			Right	150
Eastbound	Left	247	Approach	558	Left	259
	Through	292	Departure	409	Through	299
	Right	0			Right	0
Westbound	Left	0	Approach	353	Left	0
	Through	253	Departure	388	Through	259
	Right	90			Right	94
Sunday Peak Hour						
Northbound	Left	0	Approach	0	Left	0
	Through	0	Departure	0	Through	0
	Right	0			Right	0
Southbound	Left	45	Approach	192	Left	47
	Through	0	Departure	350	Through	0
	Right	138			Right	145
Eastbound	Left	216	Approach	388	Left	227
	Through	157	Departure	316	Through	161
	Right	0			Right	0
Westbound	Left	0	Approach	294	Left	0
	Through	167	Departure	208	Through	171
	Right	117			Right	123

Table B-11 - Year 2009 Intersection Turning Movements

	Saturday Peak Hour Volumes					Sunday Peak Hour Volumes				
	2009 Base	TT 15612	2009 Without Project	New Project Trips	Total Volume	2009 Base	TT 15612	2009 Without Project	New Project Trips	Total Volume
1 North Road/SR-189										
NBL	0		0	0	0	0		0	0	0
NBT	0		0	0	0	0		0	0	0
NBR	0		0	0	0	0		0	0	0
SBL	170		170	1	171	91		91	8	99
SBT	0		0	0	0	0		0	0	0
SBR	52		52	0	52	53		53	0	53
EBL	38		38	0	38	37		37	0	37
EBT	166	2	168	0	168	81	2	83	0	83
EBR	0		0	0	0	0		0	0	0
WBL	0		0	0	0	0		0	0	0
WBT	156	6	162	0	162	148	5	153	0	153
WBR	141		141	2	143	79		79	8	87
North Leg										
Approach	222	0	222	1	223	144	0	144	8	152
Departure	179	0	179	2	181	116	0	116	8	124
Total	401	0	401	3	404	260	0	260	16	276
South Leg										
Approach	0	0	0	0	0	0	0	0	0	0
Departure	0	0	0	0	0	0	0	0	0	0
Total	0	0	0	0	0	0	0	0	0	0
East Leg										
Approach	297	6	303	2	305	227	5	232	8	240
Departure	336	2	338	1	339	172	2	174	8	182
Total	633	8	641	3	644	399	7	406	16	422
West Leg										
Approach	204	2	206	0	206	118	2	120	0	120
Departure	208	6	214	0	214	201	5	206	0	206
Total	412	8	420	0	420	319	7	326	0	326
Total Approaches										
Approach	723	8	731	3	734	489	7	496	16	512
Departure	723	8	731	3	734	489	7	496	16	512
Total	1,446	16	1,462	6	1,468	978	14	992	32	1,024

Table B-11 - Year 2009 Intersection Turning Movements

	Saturday Peak Hour Volumes					Sunday Peak Hour Volumes				
	2009 Base	TT 15612	2009 Without Project	New Project Trips	Total Volume	2009 Base	TT 15612	2009 Without Project	New Project Trips	Total Volume
2 Bear Springs Road/SR-189										
NBL	21		21	2	23	12		12	8	20
NBT	14		14	0	14	14		14	0	14
NBR	15		15	0	15	10		10	0	10
SBL	36		36	0	36	35		35	0	35
SBT	11		11	0	11	11		11	0	11
SBR	62		62	0	62	59		59	0	59
EBL	66		66	0	66	42		42	0	42
EBT	219	2	221	0	221	145	2	147	0	147
EBR	33		33	1	34	21		21	8	29
WBL	11		11	0	11	12		12	0	12
WBT	213	6	219	0	219	180	5	185	0	185
WBR	33		33	0	33	19		19	0	19
North Leg										
Approach	109	0	109	0	109	105	0	105	0	105
Departure	113	0	113	0	113	75	0	75	0	75
Total	222	0	222	0	222	180	0	180	0	180
South Leg										
Approach	50	0	50	2	52	36	0	36	8	44
Departure	55	0	55	1	56	44	0	44	8	52
Total	105	0	105	3	108	80	0	80	16	96
East Leg										
Approach	257	6	263	0	263	211	5	216	0	216
Departure	270	2	272	0	272	190	2	192	0	192
Total	527	8	535	0	535	401	7	408	0	408
West Leg										
Approach	318	2	320	1	321	208	2	210	8	218
Departure	296	6	302	2	304	251	5	256	8	264
Total	614	8	622	3	625	459	7	466	16	482
Total Approaches										
Approach	734	8	742	3	745	560	7	567	16	583
Departure	734	8	742	3	745	560	7	567	16	583
Total	1,468	16	1,484	6	1,490	1,120	14	1,134	32	1,166

Table B-11 - Year 2009 Intersection Turning Movements

	Saturday Peak Hour Volumes					Sunday Peak Hour Volumes				
	2009 Base	TT 15612	2009 Without Project	New Project Trips	Total Volume	2009 Base	TT 15612	2009 Without Project	New Project Trips	Total Volume
3 Grass Valley Road/SR-189										
NBL	0		0	0	0	0		0	0	0
NBT	0		0	0	0	0		0	0	0
NBR	0		0	0	0	0		0	0	0
SBL	268	91	359	4	363	239	83	322	25	347
SBT	0		0	0	0	0		0	0	0
SBR	244	6	250	0	250	165	5	170	0	170
EBL	120	2	122	0	122	68	2	70	0	70
EBT	211		211	0	211	160		160	0	160
EBR	0		0	0	0	0		0	0	0
WBL	0		0	0	0	0		0	0	0
WBT	86		86	0	86	54		54	0	54
WBR	150	35	185	5	190	88	32	120	25	145
North Leg										
Approach	512	97	609	4	613	404	88	492	25	517
Departure	270	37	307	5	312	156	34	190	25	215
Total	782	134	916	9	925	560	122	682	50	732
South Leg										
Approach	0	0	0	0	0	0	0	0	0	0
Departure	0	0	0	0	0	0	0	0	0	0
Total	0	0	0	0	0	0	0	0	0	0
East Leg										
Approach	236	35	271	5	276	142	32	174	25	199
Departure	479	91	570	4	574	399	83	482	25	507
Total	715	126	841	9	850	541	115	656	50	706
West Leg										
Approach	331	2	333	0	333	228	2	230	0	230
Departure	330	6	336	0	336	219	5	224	0	224
Total	661	8	669	0	669	447	7	454	0	454
Total Approaches										
Approach	1,079	134	1,213	9	1,222	774	122	896	50	946
Departure	1,079	134	1,213	9	1,222	774	122	896	50	946
Total	2,158	268	2,426	18	2,444	1,548	244	1,792	100	1,892

Table B-11 - Year 2009 Intersection Turning Movements

	Saturday Peak Hour Volumes					Sunday Peak Hour Volumes				
	2009 Base	TT 15612	2009 Without Project	New Project Trips	Total Volume	2009 Base	TT 15612	2009 Without Project	New Project Trips	Total Volume
4 Daley Canyon Road/SR-189										
NBL	159	31	190	5	195	92	28	120	25	145
NBT	340		340	8	348	162		162	42	204
NBR	0		0	0	0	0		0	0	0
SBL	0		0	0	0	0		0	0	0
SBT	253		253	7	260	276		276	42	318
SBR	76		76	0	76	40		40	0	40
EBL	313		313	0	313	187		187	0	187
EBT	0		0	0	0	0		0	0	0
EBR	192	91	283	4	287	195	83	278	25	303
WBL	0		0	0	0	0		0	0	0
WBT	0		0	0	0	0		0	0	0
WBR	0		0	0	0	0		0	0	0
North Leg										
Approach	329	0	329	7	336	316	0	316	42	358
Departure	653	0	653	8	661	349	0	349	42	391
Total	982	0	982	15	997	665	0	665	84	749
South Leg										
Approach	499	31	530	13	543	254	28	282	67	349
Departure	445	91	536	11	547	471	83	554	67	621
Total	944	122	1,066	24	1,090	725	111	836	134	970
East Leg										
Approach	0	0	0	0	0	0	0	0	0	0
Departure	0	0	0	0	0	0	0	0	0	0
Total	0	0	0	0	0	0	0	0	0	0
West Leg										
Approach	505	91	596	4	600	382	83	465	25	490
Departure	235	31	266	5	271	132	28	160	25	185
Total	740	122	862	9	871	514	111	625	50	675
Total Approaches										
Approach	1,333	122	1,455	24	1,479	952	111	1,063	134	1,197
Departure	1,333	122	1,455	24	1,479	952	111	1,063	134	1,197
Total	2,666	244	2,910	48	2,958	1,904	222	2,126	268	2,394

Table B-11 - Year 2009 Intersection Turning Movements

	Saturday Peak Hour Volumes					Sunday Peak Hour Volumes				
	2009 Base	TT 15612	2009 Without Project	New Project Trips	Total Volume	2009 Base	TT 15612	2009 Without Project	New Project Trips	Total Volume
5 North Bay Road/SR-189										
NBL	0		0	0	0	0		0	0	0
NBT	0		0	0	0	0		0	0	0
NBR	0		0	0	0	0		0	0	0
SBL	140		140	0	140	75		75	0	75
SBT	0		0	0	0	0		0	0	0
SBR	278		278	3	281	244		244	17	261
EBL	295		295	3	298	174		174	17	191
EBT	317	6	323	5	328	193	5	198	25	223
EBR	0		0	0	0	0		0	0	0
WBL	0		0	0	0	0		0	0	0
WBT	218	2	220	4	224	190	2	192	25	217
WBR	105		105	0	105	82		82	0	82
North Leg										
Approach	418	0	418	3	421	319	0	319	17	336
Departure	400	0	400	3	403	256	0	256	17	273
Total	818	0	818	6	824	575	0	575	34	609
South Leg										
Approach	0	0	0	0	0	0	0	0	0	0
Departure	0	0	0	0	0	0	0	0	0	0
Total	0	0	0	0	0	0	0	0	0	0
East Leg										
Approach	323	2	325	4	329	272	2	274	25	299
Departure	457	6	463	5	468	268	5	273	25	298
Total	780	8	788	9	797	540	7	547	50	597
West Leg										
Approach	612	6	618	8	626	367	5	372	42	414
Departure	496	2	498	7	505	434	2	436	42	478
Total	1,108	8	1,116	15	1,131	801	7	808	84	892
Total Approaches										
Approach	1,353	8	1,361	15	1,376	958	7	965	84	1,049
Departure	1,353	8	1,361	15	1,376	958	7	965	84	1,049
Total	2,706	16	2,722	30	2,752	1,916	14	1,930	168	2,098

Table B-11 - Year 2009 Intersection Turning Movements

	Saturday Peak Hour Volumes					Sunday Peak Hour Volumes				
	2009 Base	TT 15612	2009 Without Project	New Project Trips	Total Volume	2009 Base	TT 15612	2009 Without Project	New Project Trips	Total Volume
6 Lake Gregory Drive/SR-189										
NBL	0		0	0	0	0		0	0	0
NBT	201		201	5	206	120		120	25	145
NBR	67		67	0	67	40		40	0	40
SBL	103		103	0	103	65		65	0	65
SBT	274		274	4	278	142		142	25	167
SBR	0		0	0	0	0		0	0	0
EBL	0		0	0	0	0		0	0	0
EBT	0		0	0	0	0		0	0	0
EBR	0		0	0	0	0		0	0	0
WBL	73		73	0	73	154		154	0	154
WBT	0		0	0	0	0		0	0	0
WBR	84		84	0	84	75		75	0	75
North Leg										
Approach	377	0	377	4	381	207	0	207	25	232
Departure	285	0	285	5	290	195	0	195	25	220
Total	662	0	662	9	671	402	0	402	50	452
South Leg										
Approach	268	0	268	5	273	160	0	160	25	185
Departure	347	0	347	4	351	296	0	296	25	321
Total	615	0	615	9	624	456	0	456	50	506
East Leg										
Approach	157	0	157	0	157	229	0	229	0	229
Departure	170	0	170	0	170	105	0	105	0	105
Total	327	0	327	0	327	334	0	334	0	334
West Leg										
Approach	0	0	0	0	0	0	0	0	0	0
Departure	0	0	0	0	0	0	0	0	0	0
Total	0	0	0	0	0	0	0	0	0	0
Total Approaches										
Approach	802	0	802	9	811	596	0	596	50	646
Departure	802	0	802	9	811	596	0	596	50	646
Total	1,604	0	1,604	18	1,622	1,192	0	1,192	100	1,292

Table B-11 - Year 2009 Intersection Turning Movements

	Saturday Peak Hour Volumes					Sunday Peak Hour Volumes				
	2009 Base	TT 15612	2009 Without Project	New Project Trips	Total Volume	2009 Base	TT 15612	2009 Without Project	New Project Trips	Total Volume
7 Lake Gregory Drive/SR-18										
NBL	0		0	0	0	0		0	0	0
NBT	0		0	0	0	0		0	0	0
NBR	0		0	0	0	0		0	0	0
SBL	256		256	4	260	140		140	25	165
SBT	0		0	0	0	0		0	0	0
SBR	92		92	0	92	156		156	0	156
EBL	116		116	0	116	55		55	0	55
EBT	420	27	447	3	450	238	25	263	17	280
EBR	0		0	0	0	0		0	0	0
WBL	0		0	0	0	0		0	0	0
WBT	376	81	457	3	460	425	74	499	17	516
WBR	152		152	5	157	105		105	25	130
North Leg										
Approach	348	0	348	4	352	296	0	296	25	321
Departure	268	0	268	5	273	160	0	160	25	185
Total	616	0	616	9	625	456	0	456	50	506
South Leg										
Approach	0	0	0	0	0	0	0	0	0	0
Departure	0	0	0	0	0	0	0	0	0	0
Total	0	0	0	0	0	0	0	0	0	0
East Leg										
Approach	528	81	609	8	617	530	74	604	42	646
Departure	676	27	703	7	710	378	25	403	42	445
Total	1,204	108	1,312	15	1,327	908	99	1,007	84	1,091
West Leg										
Approach	536	27	563	3	566	293	25	318	17	335
Departure	468	81	549	3	552	581	74	655	17	672
Total	1,004	108	1,112	6	1,118	874	99	973	34	1,007
Total Approaches										
Approach	1,412	108	1,520	15	1,535	1,119	99	1,218	84	1,302
Departure	1,412	108	1,520	15	1,535	1,119	99	1,218	84	1,302
Total	2,824	216	3,040	30	3,070	2,238	198	2,436	168	2,604

Table B-11 - Year 2009 Intersection Turning Movements

	Saturday Peak Hour Volumes					Sunday Peak Hour Volumes				
	2009 Base	TT 15612	2009 Without Project	New Project Trips	Total Volume	2009 Base	TT 15612	2009 Without Project	New Project Trips	Total Volume
8 Bear Springs Road/SR-18										
NBL	1		1	0	1	16		16	0	16
NBT	0		0	0	0	0		0	0	0
NBR	4		4	0	4	16		16	0	16
SBL	43		43	3	46	14		14	17	31
SBT	0		0	0	0	3		3	0	3
SBR	32		32	0	32	20		20	0	20
EBL	48		48	0	48	17		17	0	17
EBT	732	27	759	7	766	483	25	508	42	550
EBR	1		1	0	1	14		14	0	14
WBL	10		10	0	10	11		11	0	11
WBT	620	81	701	8	709	480	74	554	42	596
WBR	27		27	3	30	15		15	17	32
North Leg										
Approach	75	0	75	3	78	37	0	37	17	54
Departure	75	0	75	3	78	32	0	32	17	49
Total	150	0	150	6	156	69	0	69	34	103
South Leg										
Approach	5	0	5	0	5	32	0	32	0	32
Departure	11	0	11	0	11	28	0	28	0	28
Total	16	0	16	0	16	60	0	60	0	60
East Leg										
Approach	657	81	738	11	749	506	74	580	59	639
Departure	779	27	806	10	816	513	25	538	59	597
Total	1,436	108	1,544	21	1,565	1,019	99	1,118	118	1,236
West Leg										
Approach	781	27	808	7	815	514	25	539	42	581
Departure	653	81	734	8	742	516	74	590	42	632
Total	1,434	108	1,542	15	1,557	1,030	99	1,129	84	1,213
Total Approaches										
Approach	1,518	108	1,626	21	1,647	1,089	99	1,188	118	1,306
Departure	1,518	108	1,626	21	1,647	1,089	99	1,188	118	1,306
Total	3,036	216	3,252	42	3,294	2,178	198	2,376	236	2,612

Table B-11 - Year 2009 Intersection Turning Movements

	Saturday Peak Hour Volumes					Sunday Peak Hour Volumes				
	2009 Base	TT 15612	2009 Without Project	New Project Trips	Total Volume	2009 Base	TT 15612	2009 Without Project	New Project Trips	Total Volume
9 Project Access/SR-18										
NBL	0	0	0	0	0	0	0	0	0	0
NBT	0	0	0	0	0	0	0	0	0	0
NBR	0	0	0	0	0	0	0	0	0	0
SBL	0	0	0	20	20	0	0	0	109	109
SBT	0	0	0	0	0	0	0	0	0	0
SBR	0	0	0	11	11	0	0	0	58	58
EBL	0	0	0	10	10	0	0	0	58	58
EBT	797	27	824	0	824	448	25	473	0	473
EBR	0	0	0	0	0	0	0	0	0	0
WBL	0	0	0	0	0	0	0	0	0	0
WBT	634	81	715	0	715	599	74	673	0	673
WBR	0	0	0	18	18	0	0	0	109	109
North Leg										
Approach	0	0	0	31	31	0	0	0	167	167
Departure	0	0	0	28	28	0	0	0	167	167
Total	0	0	0	59	59	0	0	0	334	334
South Leg										
Approach	0	0	0	0	0	0	0	0	0	0
Departure	0	0	0	0	0	0	0	0	0	0
Total	0	0	0	0	0	0	0	0	0	0
East Leg										
Approach	634	81	715	18	733	599	74	673	109	782
Departure	797	27	824	20	844	448	25	473	109	582
Total	1,431	108	1,539	38	1,577	1,047	99	1,146	218	1,364
West Leg										
Approach	797	27	824	10	834	448	25	473	58	531
Departure	634	81	715	11	726	599	74	673	58	731
Total	1,431	108	1,539	21	1,560	1,047	99	1,146	116	1,262
Total Approaches										
Approach	1,431	108	1,539	59	1,598	1,047	99	1,146	334	1,480
Departure	1,431	108	1,539	59	1,598	1,047	99	1,146	334	1,480
Total	2,862	216	3,078	118	3,196	2,094	198	2,292	668	2,960

Table B-11 - Year 2009 Intersection Turning Movements

	Saturday Peak Hour Volumes					Sunday Peak Hour Volumes				
	2009 Base	TT 15612	2009 Without Project	New Project Trips	Total Volume	2009 Base	TT 15612	2009 Without Project	New Project Trips	Total Volume
10 Daley Canyon Road/SR-18										
NBL	0		0	0	0	0		0	0	0
NBT	0		0	0	0	0		0	0	0
NBR	0		0	0	0	0		0	0	0
SBL	0		0	0	0	0		0	0	0
SBT	0		0	0	0	0		0	0	0
SBR	295	81	376	11	387	299	74	373	67	440
EBL	319	27	346	12	358	179	25	204	67	271
EBT	478		478	8	486	269		269	42	311
EBR	0		0	0	0	0		0	0	0
WBL	0		0	0	0	0		0	0	0
WBT	339		339	7	346	300		300	42	342
WBR	0		0	0	0	0		0	0	0
North Leg										
Approach	295	81	376	11	387	299	74	373	67	440
Departure	319	27	346	12	358	179	25	204	67	271
Total	614	108	722	23	745	478	99	577	134	711
South Leg										
Approach	0	0	0	0	0	0	0	0	0	0
Departure	0	0	0	0	0	0	0	0	0	0
Total	0	0	0	0	0	0	0	0	0	0
East Leg										
Approach	339	0	339	7	346	300	0	300	42	342
Departure	478	0	478	8	486	269	0	269	42	311
Total	817	0	817	15	832	569	0	569	84	653
West Leg										
Approach	797	27	824	20	844	448	25	473	109	582
Departure	634	81	715	18	733	599	74	673	109	782
Total	1,431	108	1,539	38	1,577	1,047	99	1,146	218	1,364
Total Approaches										
Approach	1,431	108	1,539	38	1,577	1,047	99	1,146	218	1,364
Departure	1,431	108	1,539	38	1,577	1,047	99	1,146	218	1,364
Total	2,862	216	3,078	76	3,154	2,094	198	2,292	436	2,728

Table B-11 - Year 2009 Intersection Turning Movements

	Saturday Peak Hour Volumes					Sunday Peak Hour Volumes				
	2009 Base	TT 15612	2009 Without Project	New Project Trips	Total Volume	2009 Base	TT 15612	2009 Without Project	New Project Trips	Total Volume
11 Daley Cnyn Rd/Daley Cnyn Access										
NBL	0		0	0	0	0		0	0	0
NBT	319	27	346	12	358	179	25	204	67	271
NBR	0		0	0	0	0		0	0	0
SBL	161	10	171	0	171	177	9	186	0	186
SBT	295	81	376	11	387	299	74	373	67	440
SBR	0		0	0	0	0		0	0	0
EBL	0		0	0	0	0		0	0	0
EBT	0		0	0	0	0		0	0	0
EBR	0		0	0	0	0		0	0	0
WBL	0		0	0	0	0		0	0	0
WBT	0		0	0	0	0		0	0	0
WBR	161	4	165	0	165	146	3	149	0	149
North Leg										
Approach	456	91	547	11	558	476	83	559	67	626
Departure	480	31	511	12	523	325	28	353	67	420
Total	936	122	1,058	23	1,081	801	111	912	134	1,046
South Leg										
Approach	319	27	346	12	358	179	25	204	67	271
Departure	295	81	376	11	387	299	74	373	67	440
Total	614	108	722	23	745	478	99	577	134	711
East Leg										
Approach	161	4	165	0	165	146	3	149	0	149
Departure	161	10	171	0	171	177	9	186	0	186
Total	322	14	336	0	336	323	12	335	0	335
West Leg										
Approach	0	0	0	0	0	0	0	0	0	0
Departure	0	0	0	0	0	0	0	0	0	0
Total	0	0	0	0	0	0	0	0	0	0
Total Approaches										
Approach	936	122	1,058	23	1,081	801	111	912	134	1,046
Departure	936	122	1,058	23	1,081	801	111	912	134	1,046
Total	1,872	244	2,116	46	2,162	1,602	222	1,824	268	2,092

Table B-11 - Year 2009 Intersection Turning Movements

	Saturday Peak Hour Volumes					Sunday Peak Hour Volumes				
	2009 Base	TT 15612	2009 Without Project	New Project Trips	Total Volume	2009 Base	TT 15612	2009 Without Project	New Project Trips	Total Volume
12 Daley Canyon Access Road/SR-18										
NBL	0		0	0	0	0		0	0	0
NBT	0		0	0	0	0		0	0	0
NBR	0		0	0	0	0		0	0	0
SBL	161	10	171	0	171	177	9	186	0	186
SBT	0		0	0	0	0		0	0	0
SBR	0		0	0	0	0		0	0	0
EBL	0		0	0	0	0		0	0	0
EBT	478		478	8	486	269		269	42	311
EBR	0		0	0	0	0		0	0	0
WBL	0		0	0	0	0		0	0	0
WBT	339		339	7	346	300		300	42	342
WBR	161	4	165	0	165	146	3	149	0	149
North Leg										
Approach	161	10	171	0	171	177	9	186	0	186
Departure	161	4	165	0	165	146	3	149	0	149
Total	322	14	336	0	336	323	12	335	0	335
South Leg										
Approach	0	0	0	0	0	0	0	0	0	0
Departure	0	0	0	0	0	0	0	0	0	0
Total	0	0	0	0	0	0	0	0	0	0
East Leg										
Approach	500	4	504	7	511	446	3	449	42	491
Departure	639	10	649	8	657	446	9	455	42	497
Total	1,139	14	1,153	15	1,168	892	12	904	84	988
West Leg										
Approach	478	0	478	8	486	269	0	269	42	311
Departure	339	0	339	7	346	300	0	300	42	342
Total	817	0	817	15	832	569	0	569	84	653
Total Approaches										
Approach	1,139	14	1,153	15	1,168	892	12	904	84	988
Departure	1,139	14	1,153	15	1,168	892	12	904	84	988
Total	2,278	28	2,306	30	2,336	1,784	24	1,808	168	1,976

Table B-11 - Year 2009 Intersection Turning Movements

	Saturday Peak Hour Volumes					Sunday Peak Hour Volumes				
	2009 Base	TT 15612	2009 Without Project	New Project Trips	Total Volume	2009 Base	TT 15612	2009 Without Project	New Project Trips	Total Volume
13 SR-173/SR-18										
NBL	0		0	0	0	0		0	0	0
NBT	0		0	0	0	0		0	0	0
NBR	0		0	0	0	0		0	0	0
SBL	89		89	0	89	47		47	0	47
SBT	0		0	0	0	0		0	0	0
SBR	150		150	4	154	145		145	25	170
EBL	259		259	5	264	227		227	25	252
EBT	299	10	309	2	311	161	9	170	8	178
EBR	0		0	0	0	0		0	0	0
WBL	0		0	0	0	0		0	0	0
WBT	259	4	263	1	264	171	3	174	8	182
WBR	94		94	0	94	123		123	0	123
North Leg										
Approach	239	0	239	4	243	192	0	192	25	217
Departure	353	0	353	5	358	350	0	350	25	375
Total	592	0	592	9	601	542	0	542	50	592
South Leg										
Approach	0	0	0	0	0	0	0	0	0	0
Departure	0	0	0	0	0	0	0	0	0	0
Total	0	0	0	0	0	0	0	0	0	0
East Leg										
Approach	353	4	357	1	358	294	3	297	8	305
Departure	388	10	398	2	400	208	9	217	8	225
Total	741	14	755	3	758	502	12	514	16	530
West Leg										
Approach	558	10	568	7	575	388	9	397	33	430
Departure	409	4	413	5	418	316	3	319	33	352
Total	967	14	981	12	993	704	12	716	66	782
Total Approaches										
Approach	1,150	14	1,164	12	1,176	874	12	886	66	952
Departure	1,150	14	1,164	12	1,176	874	12	886	66	952
Total	2,300	28	2,328	24	2,352	1,748	24	1,772	132	1,904

Table B-12 - Forecast CTP Traffic Model Peak Hour Link Volume Worksheet
(Year 2013 Base Conditions)

		Existing Ground Count		Existing Link Volume	Growth Rate	"New" Link Volume	Future Link Volume	Balanced Link Volume
1	**North Road/SR-189**							
Saturday Peak Hour								
Northbound	Left	0	Approach	0	23.2%	0	0	0
	Through	0	Departure	0	23.2%	0	0	0
	Right	0						
Southbound	Left	162	Approach	211	23.2%	49	260	244
	Through	0	Departure	170	23.2%	39	209	197
	Right	49						
Eastbound	Left	36	Approach	198	7.3%	14	212	216
	Through	162	Departure	201	7.3%	15	216	220
	Right	0						
Westbound	Left	0	Approach	286	7.3%	21	307	318
	Through	152	Departure	324	7.3%	24	348	361
	Right	134						
Sunday Peak Hour								
Northbound	Left	0	Approach	0	23.2%	0	0	0
	Through	0	Departure	0	23.2%	0	0	0
	Right	0						
Southbound	Left	87	Approach	137	23.2%	32	169	158
	Through	0	Departure	110	23.2%	25	135	127
	Right	50						
Eastbound	Left	35	Approach	114	7.3%	8	122	126
	Through	79	Departure	195	7.3%	14	209	214
	Right	0						
Westbound	Left	0	Approach	220	7.3%	16	236	242
	Through	145	Departure	166	7.3%	12	178	185
	Right	75						

Table B-12 - Forecast CTP Traffic Model Peak Hour Link Volume Worksheet
(Year 2013 Base Conditions)

		Existing Ground Count		Existing Link Volume	Growth Rate	"New" Link Volume	Future Link Volume	Balanced Link Volume
2	**Bear Springs Road/SR-189**							
Saturday Peak Hour								
Northbound	Left	20	Approach	47	23.2%	11	58	55
	Through	13	Departure	51	23.2%	12	63	60
	Right	14						
Southbound	Left	34	Approach	103	23.2%	24	127	119
	Through	10	Departure	107	23.2%	25	132	125
	Right	59						
Eastbound	Left	63	Approach	308	7.3%	22	330	339
	Through	214	Departure	287	7.3%	21	308	314
	Right	31						
Westbound	Left	10	Approach	249	7.3%	18	267	271
	Through	208	Departure	262	7.3%	19	281	285
	Right	31						
Sunday Peak Hour								
Northbound	Left	11	Approach	33	23.2%	8	41	40
	Through	13	Departure	41	23.2%	9	50	48
	Right	9						
Southbound	Left	33	Approach	99	23.2%	23	122	115
	Through	10	Departure	71	23.2%	16	87	83
	Right	56						
Eastbound	Left	40	Approach	202	7.3%	15	217	221
	Through	142	Departure	243	7.3%	18	261	267
	Right	20						
Westbound	Left	11	Approach	205	7.3%	15	220	223
	Through	176	Departure	184	7.3%	13	197	201
	Right	18						

Table B-12 - Forecast CTP Traffic Model Peak Hour Link Volume Worksheet
(Year 2013 Base Conditions)

		Existing Ground Count		Existing Link Volume	Growth Rate	"New" Link Volume	Future Link Volume	Balanced Link Volume
3	**Grass Valley Road/SR-189**							
Saturday Peak Hour								
Northbound	Left	0	Approach	0	23.2%	0	0	0
	Through	0	Departure	0	23.2%	0	0	0
	Right	0						
Southbound	Left	256	Approach	488	23.2%	113	601	563
	Through	0	Departure	257	23.2%	60	317	296
	Right	232						
Eastbound	Left	114	Approach	320	7.3%	23	343	352
	Through	206	Departure	316	7.3%	23	339	358
	Right	0						
Westbound	Left	0	Approach	227	7.3%	17	244	255
	Through	84	Departure	462	7.3%	34	496	516
	Right	143						
Sunday Peak Hour								
Northbound	Left	0	Approach	0	23.2%	0	0	0
	Through	0	Departure	0	23.2%	0	0	0
	Right	0						
Southbound	Left	228	Approach	385	23.2%	89	474	444
	Through	0	Departure	148	23.2%	34	182	171
	Right	157						
Eastbound	Left	64	Approach	220	7.3%	16	236	241
	Through	156	Departure	210	7.3%	15	225	238
	Right	0						
Westbound	Left	0	Approach	137	7.3%	10	147	154
	Through	53	Departure	384	7.3%	28	412	430
	Right	84						

Table B-12 - Forecast CTP Traffic Model Peak Hour Link Volume Worksheet
(Year 2013 Base Conditions)

		Existing Ground Count		Existing Link Volume	Growth Rate	"New" Link Volume	Future Link Volume	Balanced Link Volume
4	**Daley Canyon Road/SR-189**							
Saturday Peak Hour								
Northbound	Left	151	Approach	475	23.2%	110	585	548
	Through	324	Departure	424	23.2%	98	522	489
	Right	0						
Southbound	Left	0	Approach	315	7.3%	23	338	357
	Through	241	Departure	630	7.3%	46	676	702
	Right	74						
Eastbound	Left	306	Approach	489	7.3%	36	525	539
	Through	0	Departure	225	7.3%	16	241	253
	Right	183						
Westbound	Left	0	Approach	0	7.3%	0	0	0
	Through	0	Departure	0	7.3%	0	0	0
	Right	0						
Sunday Peak Hour								
Northbound	Left	88	Approach	242	23.2%	56	298	279
	Through	154	Departure	449	23.2%	104	553	518
	Right	0						
Southbound	Left	0	Approach	302	7.3%	22	324	345
	Through	263	Departure	337	7.3%	25	362	374
	Right	39						
Eastbound	Left	183	Approach	369	7.3%	27	396	411
	Through	0	Departure	127	7.3%	9	136	143
	Right	186						
Westbound	Left	0	Approach	0	7.3%	0	0	0
	Through	0	Departure	0	7.3%	0	0	0
	Right	0						

Table B-12 - Forecast CTP Traffic Model Peak Hour Link Volume Worksheet
(Year 2013 Base Conditions)

		Existing Ground Count		Existing Link Volume	Growth Rate	"New" Link Volume	Future Link Volume	Balanced Link Volume
5	**North Bay Road/SR-189**							
Saturday Peak Hour								
Northbound	Left	0	Approach	0	23.2%	0	0	0
	Through	0	Departure	0	23.2%	0	0	0
	Right	0						
Southbound	Left	133	Approach	398	23.2%	92	490	459
	Through	0	Departure	381	23.2%	88	469	439
	Right	265						
Eastbound	Left	281	Approach	591	7.3%	43	634	657
	Through	310	Departure	478	7.3%	35	513	534
	Right	0						
Westbound	Left	0	Approach	313	7.3%	23	336	344
	Through	213	Departure	443	7.3%	32	475	487
	Right	100						
Sunday Peak Hour								
Northbound	Left	0	Approach	0	23.2%	0	0	0
	Through	0	Departure	0	23.2%	0	0	0
	Right	0						
Southbound	Left	71	Approach	303	23.2%	70	373	350
	Through	0	Departure	244	23.2%	56	300	281
	Right	232						
Eastbound	Left	166	Approach	355	7.3%	26	381	394
	Through	189	Departure	418	7.3%	31	449	468
	Right	0						
Westbound	Left	0	Approach	264	7.3%	19	283	290
	Through	186	Departure	260	7.3%	19	279	285
	Right	78						

Table B-12 - Forecast CTP Traffic Model Peak Hour Link Volume Worksheet
(Year 2013 Base Conditions)

		Existing Ground Count		Existing Link Volume	Growth Rate	"New" Link Volume	Future Link Volume	Balanced Link Volume
6	**Lake Gregory Drive/SR-189**							
Saturday Peak Hour								
Northbound	Left	0	Approach	262	7.3%	19	281	281
	Through	196	Departure	339	7.3%	25	364	364
	Right	66						
Southbound	Left	100	Approach	368	7.3%	27	395	395
	Through	268	Departure	278	7.3%	20	298	298
	Right	0						
Eastbound	Left	0	Approach	0	7.3%	0	0	0
	Through	0	Departure	0	7.3%	0	0	0
	Right	0						
Westbound	Left	71	Approach	153	7.3%	11	164	164
	Through	0	Departure	166	7.3%	12	178	178
	Right	82						
Sunday Peak Hour								
Northbound	Left	0	Approach	156	7.3%	11	167	167
	Through	117	Departure	289	7.3%	21	310	310
	Right	39						
Southbound	Left	64	Approach	202	7.3%	15	217	217
	Through	138	Departure	190	7.3%	14	204	204
	Right	0						
Eastbound	Left	0	Approach	0	7.3%	0	0	0
	Through	0	Departure	0	7.3%	0	0	0
	Right	0						
Westbound	Left	151	Approach	224	7.3%	16	240	240
	Through	0	Departure	103	7.3%	8	111	111
	Right	73						

Table B-12 - Forecast CTP Traffic Model Peak Hour Link Volume Worksheet
(Year 2013 Base Conditions)

		Existing Ground Count		Existing Link Volume	Growth Rate	"New" Link Volume	Future Link Volume	Balanced Link Volume
7	**Lake Gregory Drive/SR-18**							
Saturday Peak Hour								
Northbound	Left	0	Approach	0	7.3%	0	0	0
	Through	0	Departure	0	7.3%	0	0	0
	Right	0						
Southbound	Left	250	Approach	340	7.3%	25	365	365
	Through	0	Departure	262	7.3%	19	281	281
	Right	90						
Eastbound	Left	113	Approach	523	7.3%	38	561	561
	Through	410	Departure	457	7.3%	33	490	490
	Right	0						
Westbound	Left	0	Approach	516	7.3%	38	554	554
	Through	367	Departure	660	7.3%	48	708	708
	Right	149						
Sunday Peak Hour								
Northbound	Left	0	Approach	0	7.3%	0	0	0
	Through	0	Departure	0	7.3%	0	0	0
	Right	0						
Southbound	Left	137	Approach	289	7.3%	21	310	310
	Through	0	Departure	156	7.3%	11	167	167
	Right	152						
Eastbound	Left	54	Approach	286	7.3%	21	307	307
	Through	232	Departure	568	7.3%	41	609	609
	Right	0						
Westbound	Left	0	Approach	518	7.3%	38	556	556
	Through	416	Departure	369	7.3%	27	396	396
	Right	102						

Table B-12 - Forecast CTP Traffic Model Peak Hour Link Volume Worksheet
(Year 2013 Base Conditions)

		Existing Ground Count		Existing Link Volume	Growth Rate	"New" Link Volume	Future Link Volume	Balanced Link Volume
8	**Bear Springs Road/SR-18**							
Saturday Peak Hour								
Northbound	Left	1	Approach	5	23.2%	1	6	6
	Through	0	Departure	10	23.2%	2	12	12
	Right	4						
Southbound	Left	41	Approach	71	23.2%	16	87	82
	Through	0	Departure	71	23.2%	16	87	82
	Right	30						
Eastbound	Left	46	Approach	762	7.3%	56	818	821
	Through	715	Departure	637	7.3%	46	683	686
	Right	1						
Westbound	Left	9	Approach	640	7.3%	47	687	690
	Through	606	Departure	760	7.3%	55	815	819
	Right	25						
Sunday Peak Hour								
Northbound	Left	15	Approach	30	23.2%	7	37	34
	Through	0	Departure	26	23.2%	6	32	31
	Right	15						
Southbound	Left	13	Approach	35	23.2%	8	43	41
	Through	3	Departure	30	23.2%	7	37	35
	Right	19						
Eastbound	Left	16	Approach	501	7.3%	37	538	540
	Through	472	Departure	503	7.3%	37	540	542
	Right	13						
Westbound	Left	10	Approach	493	7.3%	36	529	531
	Through	469	Departure	500	7.3%	36	536	538
	Right	14						

Table B-12 - Forecast CTP Traffic Model Peak Hour Link Volume Worksheet
(Year 2013 Base Conditions)

10/11/12 Daley Canyon Road/Daley Canyon Access Road/SR-18 Combined

Saturday Peak Hour

		Existing Ground Count		Existing Link Volume	Growth Rate	"New" Link Volume	Future Link Volume	Balanced Link Volume
Northbound	Left	0	Approach	0	23.2%	0	0	0
	Through	0	Departure	0	23.2%	0	0	0
	Right	0						
Southbound	Left	153	Approach	434	23.2%	100	534	500
	Through	0	Departure	457	23.2%	106	563	526
	Right	281						
Eastbound	Left	304	Approach	771	7.3%	56	827	851
	Through	467	Departure	612	7.3%	45	657	679
	Right	0						
Westbound	Left	0	Approach	484	7.3%	35	519	531
	Through	331	Departure	620	7.3%	45	665	677
	Right	153						

Sunday Peak Hour

Northbound	Left	0	Approach	0	23.2%	0	0	0
	Through	0	Departure	0	23.2%	0	0	0
	Right	0						
Southbound	Left	169	Approach	454	23.2%	105	559	524
	Through	0	Departure	310	23.2%	72	382	357
	Right	285						
Eastbound	Left	171	Approach	434	7.3%	32	466	479
	Through	263	Departure	578	7.3%	42	620	643
	Right	0						
Westbound	Left	0	Approach	432	7.3%	32	464	474
	Through	293	Departure	432	7.3%	32	464	477
	Right	139						

Table B-12 - Forecast CTP Traffic Model Peak Hour Link Volume Worksheet
(Year 2013 Base Conditions)

		Existing Ground Count		Existing Link Volume	Growth Rate	"New" Link Volume	Future Link Volume	Balanced Link Volume
13 SR-173/SR-18								
Saturday Peak Hour								
Northbound	Left	0	Approach	0	23.2%	0	0	0
	Through	0	Departure	0	23.2%	0	0	0
	Right	0						
Southbound	Left	85	Approach	228	23.2%	53	281	263
	Through	0	Departure	337	23.2%	78	415	389
	Right	143						
Eastbound	Left	247	Approach	539	7.3%	39	578	598
	Through	292	Departure	396	7.3%	29	425	436
	Right	0						
Westbound	Left	0	Approach	343	7.3%	25	368	375
	Through	253	Departure	377	7.3%	28	405	411
	Right	90						
Sunday Peak Hour								
Northbound	Left	0	Approach	0	23.2%	0	0	0
	Through	0	Departure	0	23.2%	0	0	0
	Right	0						
Southbound	Left	45	Approach	183	23.2%	42	225	211
	Through	0	Departure	333	23.2%	77	410	384
	Right	138						
Eastbound	Left	216	Approach	373	7.3%	27	400	417
	Through	157	Departure	305	7.3%	22	327	338
	Right	0						
Westbound	Left	0	Approach	284	7.3%	21	305	314
	Through	167	Departure	202	7.3%	15	217	220
	Right	117						

Table B-13 - Calculation of Future Directional Turn Volumes From Future Directional Link Volumes (NCHRP 255)
Year 2013 Without Project Conditions

Approach Direction		Base Year Count	Forecast Future Year Link Volume		Forecast Future Year Turn Volume	
1 North Road/SR-189						
Saturday Peak Hour						
Northbound	Left	0	Approach	0	Left	0
	Through	0	Departure	0	Through	0
	Right	0			Right	0
Southbound	Left	162	Approach	244	Left	187
	Through	0	Departure	197	Through	0
	Right	49			Right	57
Eastbound	Left	36	Approach	216	Left	42
	Through	162	Departure	220	Through	174
	Right	0			Right	0
Westbound	Left	0	Approach	318	Left	0
	Through	152	Departure	361	Through	163
	Right	134			Right	155
Sunday Peak Hour						
Northbound	Left	0	Approach	0	Left	0
	Through	0	Departure	0	Through	0
	Right	0			Right	0
Southbound	Left	87	Approach	158	Left	100
	Through	0	Departure	127	Through	0
	Right	50			Right	58
Eastbound	Left	35	Approach	126	Left	41
	Through	79	Departure	214	Through	85
	Right	0			Right	0
Westbound	Left	0	Approach	242	Left	0
	Through	145	Departure	185	Through	156
	Right	75			Right	86

Table B-13 - Calculation of Future Directional Turn Volumes From Future Directional Link Volumes (NCHRP 255)
Year 2013 Without Project Conditions

Approach Direction		Base Year Count	Forecast Future Year Link Volume		Forecast Future Year Turn Volume	
2	**Bear Springs Road/SR-189**					
Saturday Peak Hour						
Northbound	Left	20	Approach	55	Left	23
	Through	13	Departure	60	Through	16
	Right	14			Right	16
Southbound	Left	34	Approach	119	Left	39
	Through	10	Departure	125	Through	12
	Right	59			Right	68
Eastbound	Left	63	Approach	339	Left	73
	Through	214	Departure	314	Through	230
	Right	31			Right	36
Westbound	Left	10	Approach	271	Left	12
	Through	208	Departure	285	Through	223
	Right	31			Right	36
Sunday Peak Hour						
Northbound	Left	11	Approach	40	Left	13
	Through	13	Departure	48	Through	16
	Right	9			Right	11
Southbound	Left	33	Approach	115	Left	38
	Through	10	Departure	83	Through	12
	Right	56			Right	65
Eastbound	Left	40	Approach	221	Left	46
	Through	142	Departure	267	Through	152
	Right	20			Right	23
Westbound	Left	11	Approach	223	Left	13
	Through	176	Departure	201	Through	190
	Right	18			Right	21

Table B-13 - Calculation of Future Directional Turn Volumes From Future Directional Link Volumes (NCHRP 255)
Year 2013 Without Project Conditions

Approach Direction		Base Year Count	Forecast Future Year Link Volume		Forecast Future Year Turn Volume	
3	**Grass Valley Road/SR-189**					
Saturday Peak Hour						
Northbound	Left	0	Approach	0	Left	0
	Through	0	Departure	0	Through	0
	Right	0			Right	0
Southbound	Left	256	Approach	563	Left	295
	Through	0	Departure	296	Through	0
	Right	232			Right	268
Eastbound	Left	114	Approach	352	Left	131
	Through	206	Departure	358	Through	221
	Right	0			Right	0
Westbound	Left	0	Approach	255	Left	0
	Through	84	Departure	516	Through	90
	Right	143			Right	165
Sunday Peak Hour						
Northbound	Left	0	Approach	0	Left	0
	Through	0	Departure	0	Through	0
	Right	0			Right	0
Southbound	Left	228	Approach	444	Left	263
	Through	0	Departure	171	Through	0
	Right	157			Right	181
Eastbound	Left	64	Approach	241	Left	74
	Through	156	Departure	238	Through	167
	Right	0			Right	0
Westbound	Left	0	Approach	154	Left	0
	Through	53	Departure	430	Through	57
	Right	84			Right	97

Table B-13 - Calculation of Future Directional Turn Volumes From Future Directional Link Volumes (NCHRP 255)
Year 2013 Without Project Conditions

Approach Direction		Base Year Count	Forecast Future Year Link Volume		Forecast Future Year Turn Volume	
4	**Daley Canyon Road/SR-189**					
Saturday Peak Hour						
Northbound	Left	151	Approach	548	Left	174
	Through	324	Departure	489	Through	374
	Right	0			Right	0
Southbound	Left	0	Approach	357	Left	0
	Through	241	Departure	702	Through	278
	Right	74			Right	79
Eastbound	Left	306	Approach	539	Left	328
	Through	0	Departure	253	Through	0
	Right	183			Right	211
Westbound	Left	0	Approach	0	Left	0
	Through	0	Departure	0	Through	0
	Right	0			Right	0
Sunday Peak Hour						
Northbound	Left	88	Approach	279	Left	101
	Through	154	Departure	518	Through	178
	Right	0			Right	0
Southbound	Left	0	Approach	345	Left	0
	Through	263	Departure	374	Through	303
	Right	39			Right	42
Eastbound	Left	183	Approach	411	Left	196
	Through	0	Departure	143	Through	0
	Right	186			Right	215
Westbound	Left	0	Approach	0	Left	0
	Through	0	Departure	0	Through	0
	Right	0			Right	0

Table B-13 - Calculation of Future Directional Turn Volumes From Future Directional Link Volumes (NCHRP 255)
Year 2013 Without Project Conditions

Approach Direction		Base Year Count	Forecast Future Year Link Volume		Forecast Future Year Turn Volume	
5 North Bay Road/SR-189						
Saturday Peak Hour						
Northbound	Left	0	Approach	0	Left	0
	Through	0	Departure	0	Through	0
	Right	0			Right	0
Southbound	Left	133	Approach	459	Left	154
	Through	0	Departure	439	Through	0
	Right	265			Right	305
Eastbound	Left	281	Approach	657	Left	324
	Through	310	Departure	534	Through	333
	Right	0			Right	0
Westbound	Left	0	Approach	344	Left	0
	Through	213	Departure	487	Through	229
	Right	100			Right	115
Sunday Peak Hour						
Northbound	Left	0	Approach	0	Left	0
	Through	0	Departure	0	Through	0
	Right	0			Right	0
Southbound	Left	71	Approach	350	Left	82
	Through	0	Departure	281	Through	0
	Right	232			Right	268
Eastbound	Left	166	Approach	394	Left	191
	Through	189	Departure	468	Through	203
	Right	0			Right	0
Westbound	Left	0	Approach	290	Left	0
	Through	186	Departure	285	Through	200
	Right	78			Right	90

Table B-13 - Calculation of Future Directional Turn Volumes From Future Directional Link Volumes (NCHRP 255)
Year 2013 Without Project Conditions

Approach Direction		Base Year Count	Forecast Future Year Link Volume		Forecast Future Year Turn Volume	
6 Lake Gregory Drive/SR-189						
Saturday Peak Hour						
Northbound	Left	0	Approach	281	Left	0
	Through	196	Departure	364	Through	210
	Right	66			Right	71
Southbound	Left	100	Approach	395	Left	107
	Through	268	Departure	298	Through	288
	Right	0			Right	0
Eastbound	Left	0	Approach	0	Left	0
	Through	0	Departure	0	Through	0
	Right	0			Right	0
Westbound	Left	71	Approach	164	Left	76
	Through	0	Departure	178	Through	0
	Right	82			Right	88
Sunday Peak Hour						
Northbound	Left	0	Approach	167	Left	0
	Through	117	Departure	310	Through	125
	Right	39			Right	42
Southbound	Left	64	Approach	217	Left	69
	Through	138	Departure	204	Through	148
	Right	0			Right	0
Eastbound	Left	0	Approach	0	Left	0
	Through	0	Departure	0	Through	0
	Right	0			Right	0
Westbound	Left	151	Approach	240	Left	162
	Through	0	Departure	111	Through	0
	Right	73			Right	79

Table B-13 - Calculation of Future Directional Turn Volumes From Future Directional Link Volumes (NCHRP 255)
Year 2013 Without Project Conditions

Approach Direction		Base Year Count	Forecast Future Year Link Volume		Forecast Future Year Turn Volume	
7 Lake Gregory Drive/SR-18						
Saturday Peak Hour						
Northbound	Left	0	Approach	0	Left	0
	Through	0	Departure	0	Through	0
	Right	0			Right	0
Southbound	Left	250	Approach	365	Left	268
	Through	0	Departure	281	Through	0
	Right	90			Right	96
Eastbound	Left	113	Approach	561	Left	121
	Through	410	Departure	490	Through	440
	Right	0			Right	0
Westbound	Left	0	Approach	554	Left	0
	Through	367	Departure	708	Through	394
	Right	149			Right	160
Sunday Peak Hour						
Northbound	Left	0	Approach	0	Left	0
	Through	0	Departure	0	Through	0
	Right	0			Right	0
Southbound	Left	137	Approach	310	Left	147
	Through	0	Departure	167	Through	0
	Right	152			Right	163
Eastbound	Left	54	Approach	307	Left	58
	Through	232	Departure	609	Through	249
	Right	0			Right	0
Westbound	Left	0	Approach	556	Left	0
	Through	416	Departure	396	Through	446
	Right	102			Right	109

Table B-13 - Calculation of Future Directional Turn Volumes From Future Directional Link Volumes (NCHRP 255)
Year 2013 Without Project Conditions

Approach Direction		Base Year Count	Forecast Future Year Link Volume		Forecast Future Year Turn Volume	
8 Bear Springs Road/SR-18						
Saturday Peak Hour						
Northbound	Left	1	Approach	6	Left	1
	Through	0	Departure	12	Through	0
	Right	4			Right	5
Southbound	Left	41	Approach	82	Left	47
	Through	0	Departure	82	Through	0
	Right	30			Right	35
Eastbound	Left	46	Approach	821	Left	53
	Through	715	Departure	686	Through	767
	Right	1			Right	1
Westbound	Left	9	Approach	690	Left	11
	Through	606	Departure	819	Through	650
	Right	25			Right	29
Sunday Peak Hour						
Northbound	Left	15	Approach	34	Left	17
	Through	0	Departure	31	Through	0
	Right	15			Right	17
Southbound	Left	13	Approach	41	Left	15
	Through	3	Departure	35	Through	4
	Right	19			Right	22
Eastbound	Left	16	Approach	540	Left	19
	Through	472	Departure	542	Through	506
	Right	13			Right	15
Westbound	Left	10	Approach	531	Left	12
	Through	469	Departure	538	Through	503
	Right	14			Right	16

Table B-13 - Calculation of Future Directional Turn Volumes From Future Directional Link Volumes (NCHRP 255)

Year 2013 Without Project Conditions

Approach Direction		Base Year Count	Forecast Future Year Link Volume		Forecast Future Year Turn Volume	
10/11/12 Daley Canyon Road/Daley Canyon Access Road/SR-18 Combined						
Saturday Peak Hour						
Northbound	Left	0	Approach	0	Left	0
	Through	0	Departure	0	Through	0
	Right	0			Right	0
Southbound	Left	153	Approach	500	Left	176
	Through	0	Departure	526	Through	0
	Right	281			Right	324
Eastbound	Left	304	Approach	851	Left	350
	Through	467	Departure	679	Through	501
	Right	0			Right	0
Westbound	Left	0	Approach	531	Left	0
	Through	331	Departure	677	Through	355
	Right	153			Right	176
Sunday Peak Hour						
Northbound	Left	0	Approach	0	Left	0
	Through	0	Departure	0	Through	0
	Right	0			Right	0
Southbound	Left	169	Approach	524	Left	195
	Through	0	Departure	357	Through	0
	Right	285			Right	329
Eastbound	Left	171	Approach	479	Left	197
	Through	263	Departure	643	Through	282
	Right	0			Right	0
Westbound	Left	0	Approach	474	Left	0
	Through	293	Departure	477	Through	314
	Right	139			Right	160

Table B-13 - Calculation of Future Directional Turn Volumes From Future Directional Link Volumes (NCHRP 255)
Year 2013 Without Project Conditions

Approach Direction		Base Year Count	Forecast Future Year Link Volume		Forecast Future Year Turn Volume	
13 SR-173/SR-18						
Saturday Peak Hour						
Northbound	Left	0	Approach	0	Left	0
	Through	0	Departure	0	Through	0
	Right	0			Right	0
Southbound	Left	85	Approach	263	Left	98
	Through	0	Departure	389	Through	0
	Right	143			Right	165
Eastbound	Left	247	Approach	598	Left	285
	Through	292	Departure	436	Through	313
	Right	0			Right	0
Westbound	Left	0	Approach	375	Left	0
	Through	253	Departure	411	Through	271
	Right	90			Right	104
Sunday Peak Hour						
Northbound	Left	0	Approach	0	Left	0
	Through	0	Departure	0	Through	0
	Right	0			Right	0
Southbound	Left	45	Approach	211	Left	52
	Through	0	Departure	384	Through	0
	Right	138			Right	159
Eastbound	Left	216	Approach	417	Left	249
	Through	157	Departure	338	Through	168
	Right	0			Right	0
Westbound	Left	0	Approach	314	Left	0
	Through	167	Departure	220	Through	179
	Right	117			Right	135

Table B-14 - Year 2013 Intersection Turning Movements

	Saturday Peak Hour Volumes					Sunday Peak Hour Volumes				
	2013 Base	TT 15612	2013 Without Project	New Project Trips	Total Volume	2013 Base	TT 15612	2013 Without Project	New Project Trips	Total Volume
1 North Road/SR-189										
NBL	0		0	0	0	0		0	0	0
NBT	0		0	0	0	0		0	0	0
NBR	0		0	0	0	0		0	0	0
SBL	187		187	1	188	100		100	20	120
SBT	0		0	0	0	0		0	0	0
SBR	57		57	0	57	58		58	0	58
EBL	42		42	0	42	41		41	0	41
EBT	174	2	176	0	176	85	2	87	0	87
EBR	0		0	0	0	0		0	0	0
WBL	0		0	0	0	0		0	0	0
WBT	163	6	169	0	169	156	5	161	0	161
WBR	155		155	2	157	86		86	20	106
North Leg										
Approach	244	0	244	1	245	158	0	158	20	178
Departure	197	0	197	2	199	127	0	127	20	147
Total	441	0	441	3	444	285	0	285	40	325
South Leg										
Approach	0	0	0	0	0	0	0	0	0	0
Departure	0	0	0	0	0	0	0	0	0	0
Total	0	0	0	0	0	0	0	0	0	0
East Leg										
Approach	318	6	324	2	326	242	5	247	20	267
Departure	361	2	363	1	364	185	2	187	20	207
Total	679	8	687	3	690	427	7	434	40	474
West Leg										
Approach	216	2	218	0	218	126	2	128	0	128
Departure	220	6	226	0	226	214	5	219	0	219
Total	436	8	444	0	444	340	7	347	0	347
Total Approaches										
Approach	778	8	786	3	789	526	7	533	40	573
Departure	778	8	786	3	789	526	7	533	40	573
Total	1,556	16	1,572	6	1,578	1,052	14	1,066	80	1,146

Table B-14 - Year 2013 Intersection Turning Movements

	Saturday Peak Hour Volumes					Sunday Peak Hour Volumes				
	2013 Base	TT 15612	2013 Without Project	New Project Trips	Total Volume	2013 Base	TT 15612	2013 Without Project	New Project Trips	Total Volume
2 Bear Springs Road/SR-189										
NBL	23		23	2	25	13		13	20	33
NBT	16		16	0	16	16		16	0	16
NBR	16		16	0	16	11		11	0	11
SBL	39		39	0	39	38		38	0	38
SBT	12		12	0	12	12		12	0	12
SBR	68		68	0	68	65		65	0	65
EBL	73		73	0	73	46		46	0	46
EBT	230	2	232	0	232	152	2	154	0	154
EBR	36		36	1	37	23		23	20	43
WBL	12		12	0	12	13		13	0	13
WBT	223	6	229	0	229	190	5	195	0	195
WBR	36		36	0	36	21		21	0	21
North Leg										
Approach	119	0	119	0	119	115	0	115	0	115
Departure	125	0	125	0	125	83	0	83	0	83
Total	244	0	244	0	244	198	0	198	0	198
South Leg										
Approach	55	0	55	2	57	40	0	40	20	60
Departure	60	0	60	1	61	48	0	48	20	68
Total	115	0	115	3	118	88	0	88	40	128
East Leg										
Approach	271	6	277	0	277	224	5	229	0	229
Departure	285	2	287	0	287	201	2	203	0	203
Total	556	8	564	0	564	425	7	432	0	432
West Leg										
Approach	339	2	341	1	342	221	2	223	20	243
Departure	314	6	320	2	322	268	5	273	20	293
Total	653	8	661	3	664	489	7	496	40	536
Total Approaches										
Approach	784	8	792	3	795	600	7	607	40	647
Departure	784	8	792	3	795	600	7	607	40	647
Total	1,568	16	1,584	6	1,590	1,200	14	1,214	80	1,294

Table B-14 - Year 2013 Intersection Turning Movements

	Saturday Peak Hour Volumes					Sunday Peak Hour Volumes				
	2013 Base	TT 15612	2013 Without Project	New Project Trips	Total Volume	2013 Base	TT 15612	2013 Without Project	New Project Trips	Total Volume
3 Grass Valley Road/SR-189										
NBL	0		0	0	0	0		0	0	0
NBT	0		0	0	0	0		0	0	0
NBR	0		0	0	0	0		0	0	0
SBL	295	91	386	4	390	263	83	346	60	406
SBT	0		0	0	0	0		0	0	0
SBR	268	6	274	0	274	181	5	186	0	186
EBL	131	2	133	0	133	74	2	76	0	76
EBT	221		221	0	221	167		167	0	167
EBR	0		0	0	0	0		0	0	0
WBL	0		0	0	0	0		0	0	0
WBT	90		90	0	90	57		57	0	57
WBR	165	35	200	5	205	97	32	129	60	189
North Leg										
Approach	563	97	660	4	664	444	88	532	60	592
Departure	296	37	333	5	338	171	34	205	60	265
Total	859	134	993	9	1,002	615	122	737	120	857
South Leg										
Approach	0	0	0	0	0	0	0	0	0	0
Departure	0	0	0	0	0	0	0	0	0	0
Total	0	0	0	0	0	0	0	0	0	0
East Leg										
Approach	255	35	290	5	295	154	32	186	60	246
Departure	516	91	607	4	611	430	83	513	60	573
Total	771	126	897	9	906	584	115	699	120	819
West Leg										
Approach	352	2	354	0	354	241	2	243	0	243
Departure	358	6	364	0	364	238	5	243	0	243
Total	710	8	718	0	718	479	7	486	0	486
Total Approaches										
Approach	1,170	134	1,304	9	1,313	839	122	961	120	1,081
Departure	1,170	134	1,304	9	1,313	839	122	961	120	1,081
Total	2,340	268	2,608	18	2,626	1,678	244	1,922	240	2,162

Table B-14 - Year 2013 Intersection Turning Movements

	Saturday Peak Hour Volumes					Sunday Peak Hour Volumes				
	2013 Base	TT 15612	2013 Without Project	New Project Trips	Total Volume	2013 Base	TT 15612	2013 Without Project	New Project Trips	Total Volume
4 Daley Canyon Road/SR-189										
NBL	174	31	205	5	210	101	28	129	60	189
NBT	374		374	8	382	178		178	100	278
NBR	0		0	0	0	0		0	0	0
SBL	0		0	0	0	0		0	0	0
SBT	278		278	7	285	303		303	100	403
SBR	79		79	0	79	42		42	0	42
EBL	328		328	0	328	196		196	0	196
EBT	0		0	0	0	0		0	0	0
EBR	211	91	302	4	306	215	83	298	60	358
WBL	0		0	0	0	0		0	0	0
WBT	0		0	0	0	0		0	0	0
WBR	0		0	0	0	0		0	0	0
North Leg										
Approach	357	0	357	7	364	345	0	345	100	445
Departure	702	0	702	8	710	374	0	374	100	474
Total	1,059	0	1,059	15	1,074	719	0	719	200	919
South Leg										
Approach	548	31	579	13	592	279	28	307	160	467
Departure	489	91	580	11	591	518	83	601	160	761
Total	1,037	122	1,159	24	1,183	797	111	908	320	1,228
East Leg										
Approach	0	0	0	0	0	0	0	0	0	0
Departure	0	0	0	0	0	0	0	0	0	0
Total	0	0	0	0	0	0	0	0	0	0
West Leg										
Approach	539	91	630	4	634	411	83	494	60	554
Departure	253	31	284	5	289	143	28	171	60	231
Total	792	122	914	9	923	554	111	665	120	785
Total Approaches										
Approach	1,444	122	1,566	24	1,590	1,035	111	1,146	320	1,466
Departure	1,444	122	1,566	24	1,590	1,035	111	1,146	320	1,466
Total	2,888	244	3,132	48	3,180	2,070	222	2,292	640	2,932

Table B-14 - Year 2013 Intersection Turning Movements

	Saturday Peak Hour Volumes					Sunday Peak Hour Volumes				
	2013 Base	TT 15612	2013 Without Project	New Project Trips	Total Volume	2013 Base	TT 15612	2013 Without Project	New Project Trips	Total Volume
5 North Bay Road/SR-189										
NBL	0		0	0	0	0		0	0	0
NBT	0		0	0	0	0		0	0	0
NBR	0		0	0	0	0		0	0	0
SBL	154		154	0	154	82		82	0	82
SBT	0		0	0	0	0		0	0	0
SBR	305		305	3	308	268		268	40	308
EBL	324		324	3	327	191		191	40	231
EBT	333	6	339	5	344	203	5	208	60	268
EBR	0		0	0	0	0		0	0	0
WBL	0		0	0	0	0		0	0	0
WBT	229	2	231	4	235	200	2	202	60	262
WBR	115		115	0	115	90		90	0	90
North Leg										
Approach	459	0	459	3	462	350	0	350	40	390
Departure	439	0	439	3	442	281	0	281	40	321
Total	898	0	898	6	904	631	0	631	80	711
South Leg										
Approach	0	0	0	0	0	0	0	0	0	0
Departure	0	0	0	0	0	0	0	0	0	0
Total	0	0	0	0	0	0	0	0	0	0
East Leg										
Approach	344	2	346	4	350	290	2	292	60	352
Departure	487	6	493	5	498	285	5	290	60	350
Total	831	8	839	9	848	575	7	582	120	702
West Leg										
Approach	657	6	663	8	671	394	5	399	100	499
Departure	534	2	536	7	543	468	2	470	100	570
Total	1,191	8	1,199	15	1,214	862	7	869	200	1,069
Total Approaches										
Approach	1,460	8	1,468	15	1,483	1,034	7	1,041	200	1,241
Departure	1,460	8	1,468	15	1,483	1,034	7	1,041	200	1,241
Total	2,920	16	2,936	30	2,966	2,068	14	2,082	400	2,482

Table B-14 - Year 2013 Intersection Turning Movements

	Saturday Peak Hour Volumes					Sunday Peak Hour Volumes				
	2013 Base	TT 15612	2013 Without Project	New Project Trips	Total Volume	2013 Base	TT 15612	2013 Without Project	New Project Trips	Total Volume
6 Lake Gregory Drive/SR-189										
NBL	0		0	0	0	0		0	0	0
NBT	210		210	5	215	125		125	60	185
NBR	71		71	0	71	42		42	0	42
SBL	107		107	0	107	69		69	0	69
SBT	288		288	4	292	148		148	60	208
SBR	0		0	0	0	0		0	0	0
EBL	0		0	0	0	0		0	0	0
EBT	0		0	0	0	0		0	0	0
EBR	0		0	0	0	0		0	0	0
WBL	76		76	0	76	162		162	0	162
WBT	0		0	0	0	0		0	0	0
WBR	88		88	0	88	79		79	0	79
North Leg										
Approach	395	0	395	4	399	217	0	217	60	277
Departure	298	0	298	5	303	204	0	204	60	264
Total	693	0	693	9	702	421	0	421	120	541
South Leg										
Approach	281	0	281	5	286	167	0	167	60	227
Departure	364	0	364	4	368	310	0	310	60	370
Total	645	0	645	9	654	477	0	477	120	597
East Leg										
Approach	164	0	164	0	164	241	0	241	0	241
Departure	178	0	178	0	178	111	0	111	0	111
Total	342	0	342	0	342	352	0	352	0	352
West Leg										
Approach	0	0	0	0	0	0	0	0	0	0
Departure	0	0	0	0	0	0	0	0	0	0
Total	0	0	0	0	0	0	0	0	0	0
Total Approaches										
Approach	840	0	840	9	849	625	0	625	120	745
Departure	840	0	840	9	849	625	0	625	120	745
Total	1,680	0	1,680	18	1,698	1,250	0	1,250	240	1,490

Table B-14 - Year 2013 Intersection Turning Movements

	Saturday Peak Hour Volumes					Sunday Peak Hour Volumes				
	2013 Base	TT 15612	2013 Without Project	New Project Trips	Total Volume	2013 Base	TT 15612	2013 Without Project	New Project Trips	Total Volume
7 Lake Gregory Drive/SR-18										
NBL	0		0	0	0	0		0	0	0
NBT	0		0	0	0	0		0	0	0
NBR	0		0	0	0	0		0	0	0
SBL	268		268	4	272	147		147	60	207
SBT	0		0	0	0	0		0	0	0
SBR	96		96	0	96	163		163	0	163
EBL	121		121	0	121	58		58	0	58
EBT	440	27	467	3	470	249	25	274	40	314
EBR	0		0	0	0	0		0	0	0
WBL	0		0	0	0	0		0	0	0
WBT	394	81	475	3	478	446	74	520	40	560
WBR	160		160	5	165	109		109	60	169
North Leg										
Approach	364	0	364	4	368	310	0	310	60	370
Departure	281	0	281	5	286	167	0	167	60	227
Total	645	0	645	9	654	477	0	477	120	597
South Leg										
Approach	0	0	0	0	0	0	0	0	0	0
Departure	0	0	0	0	0	0	0	0	0	0
Total	0	0	0	0	0	0	0	0	0	0
East Leg										
Approach	554	81	635	8	643	555	74	629	100	729
Departure	708	27	735	7	742	396	25	421	100	521
Total	1,262	108	1,370	15	1,385	951	99	1,050	200	1,250
West Leg										
Approach	561	27	588	3	591	307	25	332	40	372
Departure	490	81	571	3	574	609	74	683	40	723
Total	1,051	108	1,159	6	1,165	916	99	1,015	80	1,095
Total Approaches										
Approach	1,479	108	1,587	15	1,602	1,172	99	1,271	200	1,471
Departure	1,479	108	1,587	15	1,602	1,172	99	1,271	200	1,471
Total	2,958	216	3,174	30	3,204	2,344	198	2,542	400	2,942

Table B-14 - Year 2013 Intersection Turning Movements

	Saturday Peak Hour Volumes					Sunday Peak Hour Volumes				
	2013 Base	TT 15612	2013 Without Project	New Project Trips	Total Volume	2013 Base	TT 15612	2013 Without Project	New Project Trips	Total Volume
8 Bear Springs Road/SR-18										
NBL	1		1	0	1	17		17	0	17
NBT	0		0	0	0	0		0	0	0
NBR	5		5	0	5	17		17	0	17
SBL	47		47	3	50	15		15	40	55
SBT	0		0	0	0	4		4	0	4
SBR	35		35	0	35	22		22	0	22
EBL	53		53	0	53	19		19	0	19
EBT	767	27	794	7	801	506	25	531	100	631
EBR	1		1	0	1	15		15	0	15
WBL	11		11	0	11	12		12	0	12
WBT	650	81	731	8	739	503	74	577	100	677
WBR	29		29	3	32	16		16	40	56
North Leg										
Approach	82	0	82	3	85	41	0	41	40	81
Departure	82	0	82	3	85	35	0	35	40	75
Total	164	0	164	6	170	76	0	76	80	156
South Leg										
Approach	6	0	6	0	6	34	0	34	0	34
Departure	12	0	12	0	12	31	0	31	0	31
Total	18	0	18	0	18	65	0	65	0	65
East Leg										
Approach	690	81	771	11	782	531	74	605	140	745
Departure	819	27	846	10	856	538	25	563	140	703
Total	1,509	108	1,617	21	1,638	1,069	99	1,168	280	1,448
West Leg										
Approach	821	27	848	7	855	540	25	565	100	665
Departure	686	81	767	8	775	542	74	616	100	716
Total	1,507	108	1,615	15	1,630	1,082	99	1,181	200	1,381
Total Approaches										
Approach	1,599	108	1,707	21	1,728	1,146	99	1,245	280	1,525
Departure	1,599	108	1,707	21	1,728	1,146	99	1,245	280	1,525
Total	3,198	216	3,414	42	3,456	2,292	198	2,490	560	3,050

Table B-14 - Year 2013 Intersection Turning Movements

	Saturday Peak Hour Volumes					Sunday Peak Hour Volumes				
	2013 Base	TT 15612	2013 Without Project	New Project Trips	Total Volume	2013 Base	TT 15612	2013 Without Project	New Project Trips	Total Volume
9 Project Access/SR-18										
NBL	0	0	0	0	0	0	0	0	0	0
NBT	0	0	0	0	0	0	0	0	0	0
NBR	0	0	0	0	0	0	0	0	0	0
SBL	0	0	0	20	20	0	0	0	260	260
SBT	0	0	0	0	0	0	0	0	0	0
SBR	0	0	0	11	11	0	0	0	140	140
EBL	0	0	0	10	10	0	0	0	140	140
EBT	851	27	878	0	878	479	25	504	0	504
EBR	0	0	0	0	0	0	0	0	0	0
WBL	0	0	0	0	0	0	0	0	0	0
WBT	679	81	760	0	760	643	74	717	0	717
WBR	0	0	0	18	18	0	0	0	260	260
North Leg										
Approach	0	0	0	31	31	0	0	0	400	400
Departure	0	0	0	28	28	0	0	0	400	400
Total	0	0	0	59	59	0	0	0	800	800
South Leg										
Approach	0	0	0	0	0	0	0	0	0	0
Departure	0	0	0	0	0	0	0	0	0	0
Total	0	0	0	0	0	0	0	0	0	0
East Leg										
Approach	679	81	760	18	778	643	74	717	260	977
Departure	851	27	878	20	898	479	25	504	260	764
Total	1,530	108	1,638	38	1,676	1,122	99	1,221	520	1,741
West Leg										
Approach	851	27	878	10	888	479	25	504	140	644
Departure	679	81	760	11	771	643	74	717	140	857
Total	1,530	108	1,638	21	1,659	1,122	99	1,221	280	1,501
Total Approaches										
Approach	1,530	108	1,638	59	1,697	1,122	99	1,221	800	2,021
Departure	1,530	108	1,638	59	1,697	1,122	99	1,221	800	2,021
Total	3,060	216	3,276	118	3,394	2,244	198	2,442	1,600	4,042

Table B-14 - Year 2013 Intersection Turning Movements

	Saturday Peak Hour Volumes					Sunday Peak Hour Volumes				
	2013 Base	TT 15612	2013 Without Project	New Project Trips	Total Volume	2013 Base	TT 15612	2013 Without Project	New Project Trips	Total Volume
10 Daley Canyon Road/SR-18										
NBL	0		0	0	0	0		0	0	0
NBT	0		0	0	0	0		0	0	0
NBR	0		0	0	0	0		0	0	0
SBL	0		0	0	0	0		0	0	0
SBT	0		0	0	0	0		0	0	0
SBR	324	81	405	11	416	329	74	403	160	563
EBL	350	27	377	12	389	197	25	222	160	382
EBT	501		501	8	509	282		282	100	382
EBR	0		0	0	0	0		0	0	0
WBL	0		0	0	0	0		0	0	0
WBT	355		355	7	362	314		314	100	414
WBR	0		0	0	0	0		0	0	0
North Leg										
Approach	324	81	405	11	416	329	74	403	160	563
Departure	350	27	377	12	389	197	25	222	160	382
Total	674	108	782	23	805	526	99	625	320	945
South Leg										
Approach	0	0	0	0	0	0	0	0	0	0
Departure	0	0	0	0	0	0	0	0	0	0
Total	0	0	0	0	0	0	0	0	0	0
East Leg										
Approach	355	0	355	7	362	314	0	314	100	414
Departure	501	0	501	8	509	282	0	282	100	382
Total	856	0	856	15	871	596	0	596	200	796
West Leg										
Approach	851	27	878	20	898	479	25	504	260	764
Departure	679	81	760	18	778	643	74	717	260	977
Total	1,530	108	1,638	38	1,676	1,122	99	1,221	520	1,741
Total Approaches										
Approach	1,530	108	1,638	38	1,676	1,122	99	1,221	520	1,741
Departure	1,530	108	1,638	38	1,676	1,122	99	1,221	520	1,741
Total	3,060	216	3,276	76	3,352	2,244	198	2,442	1,040	3,482

Table B-14 - Year 2013 Intersection Turning Movements

	Saturday Peak Hour Volumes					Sunday Peak Hour Volumes				
	2013 Base	TT 15612	2013 Without Project	New Project Trips	Total Volume	2013 Base	TT 15612	2013 Without Project	New Project Trips	Total Volume
11 Daley Cnyn Rd/Daley Cnyn Access										
NBL	0		0	0	0	0		0	0	0
NBT	350	27	377	12	389	197	25	222	160	382
NBR	0		0	0	0	0		0	0	0
SBL	176	10	186	0	186	195	9	204	0	204
SBT	324	81	405	11	416	329	74	403	160	563
SBR	0		0	0	0	0		0	0	0
EBL	0		0	0	0	0		0	0	0
EBT	0		0	0	0	0		0	0	0
EBR	0		0	0	0	0		0	0	0
WBL	0		0	0	0	0		0	0	0
WBT	0		0	0	0	0		0	0	0
WBR	176	4	180	0	180	160	3	163	0	163
North Leg										
Approach	500	91	591	11	602	524	83	607	160	767
Departure	526	31	557	12	569	357	28	385	160	545
Total	1,026	122	1,148	23	1,171	881	111	992	320	1,312
South Leg										
Approach	350	27	377	12	389	197	25	222	160	382
Departure	324	81	405	11	416	329	74	403	160	563
Total	674	108	782	23	805	526	99	625	320	945
East Leg										
Approach	176	4	180	0	180	160	3	163	0	163
Departure	176	10	186	0	186	195	9	204	0	204
Total	352	14	366	0	366	355	12	367	0	367
West Leg										
Approach	0	0	0	0	0	0	0	0	0	0
Departure	0	0	0	0	0	0	0	0	0	0
Total	0	0	0	0	0	0	0	0	0	0
Total Approaches										
Approach	1,026	122	1,148	23	1,171	881	111	992	320	1,312
Departure	1,026	122	1,148	23	1,171	881	111	992	320	1,312
Total	2,052	244	2,296	46	2,342	1,762	222	1,984	640	2,624

Table B-14 - Year 2013 Intersection Turning Movements

	Saturday Peak Hour Volumes					Sunday Peak Hour Volumes				
	2013 Base	TT 15612	2013 Without Project	New Project Trips	Total Volume	2013 Base	TT 15612	2013 Without Project	New Project Trips	Total Volume
12 Daley Canyon Access Road/SR-18										
NBL	0		0	0	0	0		0	0	0
NBT	0		0	0	0	0		0	0	0
NBR	0		0	0	0	0		0	0	0
SBL	176	10	186	0	186	195	9	204	0	204
SBT	0		0	0	0	0		0	0	0
SBR	0		0	0	0	0		0	0	0
EBL	0		0	0	0	0		0	0	0
EBT	501		501	8	509	282		282	100	382
EBR	0		0	0	0	0		0	0	0
WBL	0		0	0	0	0		0	0	0
WBT	355		355	7	362	314		314	100	414
WBR	176	4	180	0	180	160	3	163	0	163
North Leg										
Approach	176	10	186	0	186	195	9	204	0	204
Departure	176	4	180	0	180	160	3	163	0	163
Total	352	14	366	0	366	355	12	367	0	367
South Leg										
Approach	0	0	0	0	0	0	0	0	0	0
Departure	0	0	0	0	0	0	0	0	0	0
Total	0	0	0	0	0	0	0	0	0	0
East Leg										
Approach	531	4	535	7	542	474	3	477	100	577
Departure	677	10	687	8	695	477	9	486	100	586
Total	1,208	14	1,222	15	1,237	951	12	963	200	1,163
West Leg										
Approach	501	0	501	8	509	282	0	282	100	382
Departure	355	0	355	7	362	314	0	314	100	414
Total	856	0	856	15	871	596	0	596	200	796
Total Approaches										
Approach	1,208	14	1,222	15	1,237	951	12	963	200	1,163
Departure	1,208	14	1,222	15	1,237	951	12	963	200	1,163
Total	2,416	28	2,444	30	2,474	1,902	24	1,926	400	2,326

Table B-14 - Year 2013 Intersection Turning Movements

	Saturday Peak Hour Volumes					Sunday Peak Hour Volumes				
	2013 Base	TT 15612	2013 Without Project	New Project Trips	Total Volume	2013 Base	TT 15612	2013 Without Project	New Project Trips	Total Volume
13 SR-173/SR-18										
NBL	0		0	0	0	0		0	0	0
NBT	0		0	0	0	0		0	0	0
NBR	0		0	0	0	0		0	0	0
SBL	98		98	0	98	52		52	0	52
SBT	0		0	0	0	0		0	0	0
SBR	165		165	4	169	159		159	60	219
EBL	285		285	5	290	249		249	60	309
EBT	313	10	323	2	325	168	9	177	20	197
EBR	0		0	0	0	0		0	0	0
WBL	0		0	0	0	0		0	0	0
WBT	271	4	275	1	276	179	3	182	20	202
WBR	104		104	0	104	135		135	0	135
North Leg										
Approach	263	0	263	4	267	211	0	211	60	271
Departure	389	0	389	5	394	384	0	384	60	444
Total	652	0	652	9	661	595	0	595	120	715
South Leg										
Approach	0	0	0	0	0	0	0	0	0	0
Departure	0	0	0	0	0	0	0	0	0	0
Total	0	0	0	0	0	0	0	0	0	0
East Leg										
Approach	375	4	379	1	380	314	3	317	20	337
Departure	411	10	421	2	423	220	9	229	20	249
Total	786	14	800	3	803	534	12	546	40	586
West Leg										
Approach	598	10	608	7	615	417	9	426	80	506
Departure	436	4	440	5	445	338	3	341	80	421
Total	1,034	14	1,048	12	1,060	755	12	767	160	927
Total Approaches										
Approach	1,236	14	1,250	12	1,262	942	12	954	160	1,114
Departure	1,236	14	1,250	12	1,262	942	12	954	160	1,114
Total	2,472	28	2,500	24	2,524	1,884	24	1,908	320	2,228

Table B-15 - Forecast CTP Traffic Model Peak Hour Link Volume Worksheet
(Year 2030 Base Conditions)

		Existing Ground Count		Existing Link Volume	Growth Rate	"New" Link Volume	Future Link Volume	Balanced Link Volume
1	**North Road/SR-189**							
Saturday Peak Hour								
Northbound	Left	0	Approach	0	122.2%	0	0	0
	Through	0	Departure	0	122.2%	0	0	0
	Right	0						
Southbound	Left	162	Approach	211	122.2%	258	469	373
	Through	0	Departure	170	122.2%	208	378	301
	Right	49						
Eastbound	Left	36	Approach	198	31.0%	61	259	276
	Through	162	Departure	201	31.0%	62	263	286
	Right	0						
Westbound	Left	0	Approach	286	31.0%	89	375	436
	Through	152	Departure	324	31.0%	100	424	498
	Right	134						
Sunday Peak Hour								
Northbound	Left	0	Approach	0	122.2%	0	0	0
	Through	0	Departure	0	122.2%	0	0	0
	Right	0						
Southbound	Left	87	Approach	137	122.2%	167	304	242
	Through	0	Departure	110	122.2%	134	244	195
	Right	50						
Eastbound	Left	35	Approach	114	31.0%	35	149	165
	Through	79	Departure	195	31.0%	60	255	278
	Right	0						
Westbound	Left	0	Approach	220	31.0%	68	288	323
	Through	145	Departure	166	31.0%	51	217	257
	Right	75						

Table B-15 - Forecast CTP Traffic Model Peak Hour Link Volume Worksheet
(Year 2030 Base Conditions)

		Existing Ground Count		Existing Link Volume	Growth Rate	"New" Link Volume	Future Link Volume	Balanced Link Volume
2	**Bear Springs Road/SR-189**							
Saturday Peak Hour								
Northbound	Left	20	Approach	47	122.2%	57	104	89
	Through	13	Departure	51	122.2%	62	113	95
	Right	14						
Southbound	Left	34	Approach	103	122.2%	126	229	187
	Through	10	Departure	107	122.2%	131	238	196
	Right	59						
Eastbound	Left	63	Approach	308	31.0%	95	403	447
	Through	214	Departure	287	31.0%	89	376	411
	Right	31						
Westbound	Left	10	Approach	249	31.0%	77	326	345
	Through	208	Departure	262	31.0%	81	343	366
	Right	31						
Sunday Peak Hour								
Northbound	Left	11	Approach	33	122.2%	40	73	64
	Through	13	Departure	41	122.2%	50	91	76
	Right	9						
Southbound	Left	33	Approach	99	122.2%	121	220	179
	Through	10	Departure	71	122.2%	87	158	132
	Right	56						
Eastbound	Left	40	Approach	202	31.0%	63	265	292
	Through	142	Departure	243	31.0%	75	318	349
	Right	20						
Westbound	Left	11	Approach	205	31.0%	64	269	282
	Through	176	Departure	184	31.0%	57	241	260
	Right	18						

Table B-15 - Forecast CTP Traffic Model Peak Hour Link Volume Worksheet
(Year 2030 Base Conditions)

		Existing Ground Count		Existing Link Volume	Growth Rate	"New" Link Volume	Future Link Volume	Balanced Link Volume
3	**Grass Valley Road/SR-189**							
Saturday Peak Hour								
Northbound	Left	0	Approach	0	122.2%	0	0	0
	Through	0	Departure	0	122.2%	0	0	0
	Right	0						
Southbound	Left	256	Approach	488	122.2%	596	1,084	862
	Through	0	Departure	257	122.2%	314	571	454
	Right	232						
Eastbound	Left	114	Approach	320	31.0%	99	419	471
	Through	206	Departure	316	31.0%	98	414	520
	Right	0						
Westbound	Left	0	Approach	227	31.0%	70	297	363
	Through	84	Departure	462	31.0%	143	605	722
	Right	143						
Sunday Peak Hour								
Northbound	Left	0	Approach	0	122.2%	0	0	0
	Through	0	Departure	0	122.2%	0	0	0
	Right	0						
Southbound	Left	228	Approach	385	122.2%	470	855	681
	Through	0	Departure	148	122.2%	181	329	262
	Right	157						
Eastbound	Left	64	Approach	220	31.0%	68	288	317
	Through	156	Departure	210	31.0%	65	275	347
	Right	0						
Westbound	Left	0	Approach	137	31.0%	42	179	218
	Through	53	Departure	384	31.0%	119	503	607
	Right	84						

Table B-15 - Forecast CTP Traffic Model Peak Hour Link Volume Worksheet
(Year 2030 Base Conditions)

		Existing Ground Count		Existing Link Volume	Growth Rate	"New" Link Volume	Future Link Volume	Balanced Link Volume
4	**Daley Canyon Road/SR-189**							
Saturday Peak Hour								
Northbound	Left	151	Approach	475	122.2%	580	1,055	839
	Through	324	Departure	424	122.2%	518	942	750
	Right	0						
Southbound	Left	0	Approach	315	31.0%	98	413	523
	Through	241	Departure	630	31.0%	195	825	973
	Right	74						
Eastbound	Left	306	Approach	489	31.0%	152	641	725
	Through	0	Departure	225	31.0%	70	295	364
	Right	183						
Westbound	Left	0	Approach	0	31.0%	0	0	0
	Through	0	Departure	0	31.0%	0	0	0
	Right	0						
Sunday Peak Hour								
Northbound	Left	88	Approach	242	122.2%	296	538	428
	Through	154	Departure	449	122.2%	549	998	794
	Right	0						
Southbound	Left	0	Approach	302	31.0%	94	396	516
	Through	263	Departure	337	31.0%	104	441	512
	Right	39						
Eastbound	Left	183	Approach	369	31.0%	114	483	569
	Through	0	Departure	127	31.0%	39	166	207
	Right	186						
Westbound	Left	0	Approach	0	31.0%	0	0	0
	Through	0	Departure	0	31.0%	0	0	0
	Right	0						

Table B-15 - Forecast CTP Traffic Model Peak Hour Link Volume Worksheet
(Year 2030 Base Conditions)

		Existing Ground Count		Existing Link Volume	Growth Rate	"New" Link Volume	Future Link Volume	Balanced Link Volume
5	**North Bay Road/SR-189**							
Saturday Peak Hour								
Northbound	Left	0	Approach	0	122.2%	0	0	0
	Through	0	Departure	0	122.2%	0	0	0
	Right	0						
Southbound	Left	133	Approach	398	122.2%	486	884	703
	Through	0	Departure	381	122.2%	465	846	673
	Right	265						
Eastbound	Left	281	Approach	591	31.0%	183	774	902
	Through	310	Departure	478	31.0%	148	626	747
	Right	0						
Westbound	Left	0	Approach	313	31.0%	97	410	456
	Through	213	Departure	443	31.0%	137	580	641
	Right	100						
Sunday Peak Hour								
Northbound	Left	0	Approach	0	122.2%	0	0	0
	Through	0	Departure	0	122.2%	0	0	0
	Right	0						
Southbound	Left	71	Approach	303	122.2%	370	673	536
	Through	0	Departure	244	122.2%	298	542	431
	Right	232						
Eastbound	Left	166	Approach	355	31.0%	110	465	541
	Through	189	Departure	418	31.0%	130	548	654
	Right	0						
Westbound	Left	0	Approach	264	31.0%	82	346	382
	Through	186	Departure	260	31.0%	81	341	374
	Right	78						

Table B-15 - Forecast CTP Traffic Model Peak Hour Link Volume Worksheet
(Year 2030 Base Conditions)

		Existing Ground Count		Existing Link Volume	Growth Rate	"New" Link Volume	Future Link Volume	Balanced Link Volume
6	**Lake Gregory Drive/SR-189**							
Saturday Peak Hour								
Northbound	Left	0	Approach	262	31.0%	81	343	343
	Through	196	Departure	339	31.0%	105	444	444
	Right	66						
Southbound	Left	100	Approach	368	31.0%	114	482	482
	Through	268	Departure	278	31.0%	86	364	364
	Right	0						
Eastbound	Left	0	Approach	0	31.0%	0	0	0
	Through	0	Departure	0	31.0%	0	0	0
	Right	0						
Westbound	Left	71	Approach	153	31.0%	47	200	200
	Through	0	Departure	166	31.0%	51	217	217
	Right	82						
Sunday Peak Hour								
Northbound	Left	0	Approach	156	31.0%	48	204	204
	Through	117	Departure	289	31.0%	90	379	379
	Right	39						
Southbound	Left	64	Approach	202	31.0%	63	265	265
	Through	138	Departure	190	31.0%	59	249	249
	Right	0						
Eastbound	Left	0	Approach	0	31.0%	0	0	0
	Through	0	Departure	0	31.0%	0	0	0
	Right	0						
Westbound	Left	151	Approach	224	31.0%	69	293	293
	Through	0	Departure	103	31.0%	32	135	135
	Right	73						

Table B-15 - Forecast CTP Traffic Model Peak Hour Link Volume Worksheet
(Year 2030 Base Conditions)

		Existing Ground Count		Existing Link Volume	Growth Rate	"New" Link Volume	Future Link Volume	Balanced Link Volume
7	**Lake Gregory Drive/SR-18**							
Saturday Peak Hour								
Northbound	Left	0	Approach	0	31.0%	0	0	0
	Through	0	Departure	0	31.0%	0	0	0
	Right	0						
Southbound	Left	250	Approach	340	31.0%	105	445	445
	Through	0	Departure	262	31.0%	81	343	343
	Right	90						
Eastbound	Left	113	Approach	523	31.0%	162	685	685
	Through	410	Departure	457	31.0%	142	599	599
	Right	0						
Westbound	Left	0	Approach	516	31.0%	160	676	676
	Through	367	Departure	660	31.0%	205	865	865
	Right	149						
Sunday Peak Hour								
Northbound	Left	0	Approach	0	31.0%	0	0	0
	Through	0	Departure	0	31.0%	0	0	0
	Right	0						
Southbound	Left	137	Approach	289	31.0%	90	379	379
	Through	0	Departure	156	31.0%	48	204	204
	Right	152						
Eastbound	Left	54	Approach	286	31.0%	89	375	375
	Through	232	Departure	568	31.0%	176	744	744
	Right	0						
Westbound	Left	0	Approach	518	31.0%	161	679	679
	Through	416	Departure	369	31.0%	114	483	483
	Right	102						

Table B-15 - Forecast CTP Traffic Model Peak Hour Link Volume Worksheet
(Year 2030 Base Conditions)

		Existing Ground Count		Existing Link Volume	Growth Rate	"New" Link Volume	Future Link Volume	Balanced Link Volume
8	**Bear Springs Road/SR-18**							
Saturday Peak Hour								
Northbound	Left	1	Approach	5	122.2%	6	11	9
	Through	0	Departure	10	122.2%	12	22	18
	Right	4						
Southbound	Left	41	Approach	71	122.2%	87	158	126
	Through	0	Departure	71	122.2%	87	158	126
	Right	30						
Eastbound	Left	46	Approach	762	31.0%	236	998	1,020
	Through	715	Departure	637	31.0%	197	834	849
	Right	1						
Westbound	Left	9	Approach	640	31.0%	198	838	855
	Through	606	Departure	760	31.0%	236	996	1,017
	Right	25						
Sunday Peak Hour								
Northbound	Left	15	Approach	30	122.2%	37	67	54
	Through	0	Departure	26	122.2%	32	58	48
	Right	15						
Southbound	Left	13	Approach	35	122.2%	43	78	64
	Through	3	Departure	30	122.2%	37	67	54
	Right	19						
Eastbound	Left	16	Approach	501	31.0%	155	656	670
	Through	472	Departure	503	31.0%	156	659	675
	Right	13						
Westbound	Left	10	Approach	493	31.0%	153	646	657
	Through	469	Departure	500	31.0%	155	655	668
	Right	14						

Table B-15 - Forecast CTP Traffic Model Peak Hour Link Volume Worksheet
(Year 2030 Base Conditions)

10/11/12 Daley Canyon Road/Daley Canyon Access Road/SR-18 Combined

Saturday Peak Hour

		Existing Ground Count		Existing Link Volume	Growth Rate	"New" Link Volume	Future Link Volume	Balanced Link Volume
Northbound	Left	0	Approach	0	122.2%	0	0	0
	Through	0	Departure	0	122.2%	0	0	0
	Right	0						
Southbound	Left	153	Approach	434	122.2%	530	964	766
	Through	0	Departure	457	122.2%	558	1,015	807
	Right	281						
Eastbound	Left	304	Approach	771	31.0%	239	1,010	1,149
	Through	467	Departure	612	31.0%	190	802	930
	Right	0						
Westbound	Left	0	Approach	484	31.0%	150	634	704
	Through	331	Departure	620	31.0%	192	812	882
	Right	153						

Sunday Peak Hour

Northbound	Left	0	Approach	0	122.2%	0	0	0
	Through	0	Departure	0	122.2%	0	0	0
	Right	0						
Southbound	Left	169	Approach	454	122.2%	555	1,009	801
	Through	0	Departure	310	122.2%	379	689	548
	Right	285						
Eastbound	Left	171	Approach	434	31.0%	135	569	647
	Through	263	Departure	578	31.0%	179	757	887
	Right	0						
Westbound	Left	0	Approach	432	31.0%	134	566	630
	Through	293	Departure	432	31.0%	134	566	643
	Right	139						

Table B-15 - Forecast CTP Traffic Model Peak Hour Link Volume Worksheet
(Year 2030 Base Conditions)

		Existing Ground Count		Existing Link Volume	Growth Rate	"New" Link Volume	Future Link Volume	Balanced Link Volume
13 SR-173/SR-18								
Saturday Peak Hour								
Northbound	Left	0	Approach	0	122.2%	0	0	0
	Through	0	Departure	0	122.2%	0	0	0
	Right	0						
Southbound	Left	85	Approach	228	122.2%	279	507	403
	Through	0	Departure	337	122.2%	412	749	596
	Right	143						
Eastbound	Left	247	Approach	539	31.0%	167	706	820
	Through	292	Departure	396	31.0%	123	519	584
	Right	0						
Westbound	Left	0	Approach	343	31.0%	106	449	490
	Through	253	Departure	377	31.0%	117	494	533
	Right	90						
Sunday Peak Hour								
Northbound	Left	0	Approach	0	122.2%	0	0	0
	Through	0	Departure	0	122.2%	0	0	0
	Right	0						
Southbound	Left	45	Approach	183	122.2%	224	407	324
	Through	0	Departure	333	122.2%	407	740	589
	Right	138						
Eastbound	Left	216	Approach	373	31.0%	116	489	588
	Through	157	Departure	305	31.0%	95	400	463
	Right	0						
Westbound	Left	0	Approach	284	31.0%	88	372	426
	Through	167	Departure	202	31.0%	63	265	286
	Right	117						

Table B-16 - Calculation of Future Directional Turn Volumes From Future Directional Link Volumes (NCHRP 255)
Year 2030 Without Project Conditions

Approach Direction		Base Year Count	Forecast Future Year Link Volume		Forecast Future Year Turn Volume	
1 North Road/SR-189						
Saturday Peak Hour						
Northbound	Left	0	Approach	0	Left	0
	Through	0	Departure	0	Through	0
	Right	0			Right	0
Southbound	Left	162	Approach	373	Left	286
	Through	0	Departure	301	Through	0
	Right	49			Right	87
Eastbound	Left	36	Approach	276	Left	64
	Through	162	Departure	286	Through	212
	Right	0			Right	0
Westbound	Left	0	Approach	436	Left	0
	Through	152	Departure	498	Through	199
	Right	134			Right	237
Sunday Peak Hour						
Northbound	Left	0	Approach	0	Left	0
	Through	0	Departure	0	Through	0
	Right	0			Right	0
Southbound	Left	87	Approach	242	Left	154
	Through	0	Departure	195	Through	0
	Right	50			Right	88
Eastbound	Left	35	Approach	165	Left	62
	Through	79	Departure	278	Through	103
	Right	0			Right	0
Westbound	Left	0	Approach	323	Left	0
	Through	145	Departure	257	Through	190
	Right	75			Right	133

Table B-16 - Calculation of Future Directional Turn Volumes From Future Directional Link Volumes (NCHRP 255)
Year 2030 Without Project Conditions

Approach Direction		Base Year Count	Forecast Future Year Link Volume		Forecast Future Year Turn Volume	
2 Bear Springs Road/SR-189						
Saturday Peak Hour						
Northbound	Left	20	Approach	89	Left	35
	Through	13	Departure	95	Through	30
	Right	14			Right	24
Southbound	Left	34	Approach	187	Left	60
	Through	10	Departure	196	Through	23
	Right	59			Right	104
Eastbound	Left	63	Approach	447	Left	111
	Through	214	Departure	411	Through	282
	Right	31			Right	54
Westbound	Left	10	Approach	345	Left	17
	Through	208	Departure	366	Through	273
	Right	31			Right	55
Sunday Peak Hour						
Northbound	Left	11	Approach	64	Left	19
	Through	13	Departure	76	Through	30
	Right	9			Right	15
Southbound	Left	33	Approach	179	Left	58
	Through	10	Departure	132	Through	23
	Right	56			Right	99
Eastbound	Left	40	Approach	292	Left	71
	Through	142	Departure	349	Through	187
	Right	20			Right	34
Westbound	Left	11	Approach	282	Left	19
	Through	176	Departure	260	Through	232
	Right	18			Right	32

Table B-16 - Calculation of Future Directional Turn Volumes From Future Directional Link Volumes (NCHRP 255)
Year 2030 Without Project Conditions

Approach Direction		Base Year Count	Forecast Future Year Link Volume		Forecast Future Year Turn Volume	
3	**Grass Valley Road/SR-189**					
Saturday Peak Hour						
Northbound	Left	0	Approach	0	Left	0
	Through	0	Departure	0	Through	0
	Right	0			Right	0
Southbound	Left	256	Approach	862	Left	452
	Through	0	Departure	454	Through	0
	Right	232			Right	410
Eastbound	Left	114	Approach	471	Left	201
	Through	206	Departure	520	Through	270
	Right	0			Right	0
Westbound	Left	0	Approach	363	Left	0
	Through	84	Departure	722	Through	110
	Right	143			Right	253
Sunday Peak Hour						
Northbound	Left	0	Approach	0	Left	0
	Through	0	Departure	0	Through	0
	Right	0			Right	0
Southbound	Left	228	Approach	681	Left	403
	Through	0	Departure	262	Through	0
	Right	157			Right	278
Eastbound	Left	64	Approach	317	Left	113
	Through	156	Departure	347	Through	204
	Right	0			Right	0
Westbound	Left	0	Approach	218	Left	0
	Through	53	Departure	607	Through	69
	Right	84			Right	149

Table B-16 - Calculation of Future Directional Turn Volumes From Future Directional Link Volumes (NCHRP 255)
Year 2030 Without Project Conditions

Approach Direction		Base Year Count	Forecast Future Year Link Volume		Forecast Future Year Turn Volume	
4	**Daley Canyon Road/SR-189**					
Saturday Peak Hour						
Northbound	Left	151	Approach	839	Left	267
	Through	324	Departure	750	Through	572
	Right	0			Right	0
Southbound	Left	0	Approach	523	Left	0
	Through	241	Departure	973	Through	426
	Right	74			Right	97
Eastbound	Left	306	Approach	725	Left	401
	Through	0	Departure	364	Through	0
	Right	183			Right	324
Westbound	Left	0	Approach	0	Left	0
	Through	0	Departure	0	Through	0
	Right	0			Right	0
Sunday Peak Hour						
Northbound	Left	88	Approach	428	Left	156
	Through	154	Departure	794	Through	272
	Right	0			Right	0
Southbound	Left	0	Approach	516	Left	0
	Through	263	Departure	512	Through	465
	Right	39			Right	51
Eastbound	Left	183	Approach	569	Left	240
	Through	0	Departure	207	Through	0
	Right	186			Right	329
Westbound	Left	0	Approach	0	Left	0
	Through	0	Departure	0	Through	0
	Right	0			Right	0

Table B-16 - Calculation of Future Directional Turn Volumes From Future Directional Link Volumes (NCHRP 255)
Year 2030 Without Project Conditions

Approach Direction		Base Year Count	Forecast Future Year Link Volume		Forecast Future Year Turn Volume	
5 North Bay Road/SR-189						
Saturday Peak Hour						
Northbound	Left	0	Approach	0	Left	0
	Through	0	Departure	0	Through	0
	Right	0			Right	0
Southbound	Left	133	Approach	703	Left	235
	Through	0	Departure	673	Through	0
	Right	265			Right	468
Eastbound	Left	281	Approach	902	Left	496
	Through	310	Departure	747	Through	406
	Right	0			Right	0
Westbound	Left	0	Approach	456	Left	0
	Through	213	Departure	641	Through	279
	Right	100			Right	177
Sunday Peak Hour						
Northbound	Left	0	Approach	0	Left	0
	Through	0	Departure	0	Through	0
	Right	0			Right	0
Southbound	Left	71	Approach	536	Left	126
	Through	0	Departure	431	Through	0
	Right	232			Right	410
Eastbound	Left	166	Approach	541	Left	293
	Through	189	Departure	654	Through	248
	Right	0			Right	0
Westbound	Left	0	Approach	382	Left	0
	Through	186	Departure	374	Through	244
	Right	78			Right	138

Table B-16 - Calculation of Future Directional Turn Volumes From Future Directional Link Volumes (NCHRP 255)
Year 2030 Without Project Conditions

Approach Direction		Base Year Count	Forecast Future Year Link Volume		Forecast Future Year Turn Volume	
6 Lake Gregory Drive/SR-189						
Saturday Peak Hour						
Northbound	Left	0	Approach	343	Left	0
	Through	196	Departure	444	Through	257
	Right	66			Right	86
Southbound	Left	100	Approach	482	Left	131
	Through	268	Departure	364	Through	351
	Right	0			Right	0
Eastbound	Left	0	Approach	0	Left	0
	Through	0	Departure	0	Through	0
	Right	0			Right	0
Westbound	Left	71	Approach	200	Left	93
	Through	0	Departure	217	Through	0
	Right	82			Right	107
Sunday Peak Hour						
Northbound	Left	0	Approach	204	Left	0
	Through	117	Departure	379	Through	153
	Right	39			Right	51
Southbound	Left	64	Approach	265	Left	84
	Through	138	Departure	249	Through	181
	Right	0			Right	0
Eastbound	Left	0	Approach	0	Left	0
	Through	0	Departure	0	Through	0
	Right	0			Right	0
Westbound	Left	151	Approach	293	Left	198
	Through	0	Departure	135	Through	0
	Right	73			Right	96

Table B-16 - Calculation of Future Directional Turn Volumes From Future Directional Link Volumes (NCHRP 255)
Year 2030 Without Project Conditions

Approach Direction		Base Year Count	Forecast Future Year Link Volume		Forecast Future Year Turn Volume	
7 Lake Gregory Drive/SR-18						
Saturday Peak Hour						
Northbound	Left	0	Approach	0	Left	0
	Through	0	Departure	0	Through	0
	Right	0			Right	0
Southbound	Left	250	Approach	445	Left	327
	Through	0	Departure	343	Through	0
	Right	90			Right	118
Eastbound	Left	113	Approach	685	Left	148
	Through	410	Departure	599	Through	538
	Right	0			Right	0
Westbound	Left	0	Approach	676	Left	0
	Through	367	Departure	865	Through	481
	Right	149			Right	195
Sunday Peak Hour						
Northbound	Left	0	Approach	0	Left	0
	Through	0	Departure	0	Through	0
	Right	0			Right	0
Southbound	Left	137	Approach	379	Left	179
	Through	0	Departure	204	Through	0
	Right	152			Right	199
Eastbound	Left	54	Approach	375	Left	71
	Through	232	Departure	744	Through	304
	Right	0			Right	0
Westbound	Left	0	Approach	679	Left	0
	Through	416	Departure	483	Through	545
	Right	102			Right	133

Table B-16 - Calculation of Future Directional Turn Volumes From Future Directional Link Volumes (NCHRP 255)
Year 2030 Without Project Conditions

Approach Direction		Base Year Count	Forecast Future Year Link Volume		Forecast Future Year Turn Volume	
8 Bear Springs Road/SR-18						
Saturday Peak Hour						
Northbound	Left	1	Approach	9	Left	2
	Through	0	Departure	18	Through	0
	Right	4			Right	7
Southbound	Left	41	Approach	126	Left	73
	Through	0	Departure	126	Through	0
	Right	30			Right	53
Eastbound	Left	46	Approach	1,020	Left	82
	Through	715	Departure	849	Through	937
	Right	1			Right	2
Westbound	Left	9	Approach	855	Left	16
	Through	606	Departure	1,017	Through	794
	Right	25			Right	44
Sunday Peak Hour						
Northbound	Left	15	Approach	54	Left	27
	Through	0	Departure	48	Through	0
	Right	15			Right	27
Southbound	Left	13	Approach	64	Left	23
	Through	3	Departure	54	Through	7
	Right	19			Right	34
Eastbound	Left	16	Approach	670	Left	29
	Through	472	Departure	675	Through	618
	Right	13			Right	23
Westbound	Left	10	Approach	657	Left	18
	Through	469	Departure	668	Through	614
	Right	14			Right	25

Table B-16 - Calculation of Future Directional Turn Volumes From Future Directional Link Volumes (NCHRP 255)
Year 2030 Without Project Conditions

Approach Direction		Base Year Count	Forecast Future Year Link Volume		Forecast Future Year Turn Volume	
10/11/12 Daley Canyon Road/Daley Canyon Access Road/SR-18 Combined						
Saturday Peak Hour						
Northbound	Left	0	Approach	0	Left	0
	Through	0	Departure	0	Through	0
	Right	0			Right	0
Southbound	Left	153	Approach	766	Left	270
	Through	0	Departure	807	Through	0
	Right	281			Right	496
Eastbound	Left	304	Approach	1,149	Left	537
	Through	467	Departure	930	Through	612
	Right	0			Right	0
Westbound	Left	0	Approach	704	Left	0
	Through	331	Departure	882	Through	434
	Right	153			Right	270
Sunday Peak Hour						
Northbound	Left	0	Approach	0	Left	0
	Through	0	Departure	0	Through	0
	Right	0			Right	0
Southbound	Left	169	Approach	801	Left	298
	Through	0	Departure	548	Through	0
	Right	285			Right	503
Eastbound	Left	171	Approach	647	Left	302
	Through	263	Departure	887	Through	345
	Right	0			Right	0
Westbound	Left	0	Approach	630	Left	0
	Through	293	Departure	643	Through	384
	Right	139			Right	246

Table B-16 - Calculation of Future Directional Turn Volumes From Future Directional Link Volumes (NCHRP 255)
Year 2030 Without Project Conditions

Approach Direction		Base Year Count	Forecast Future Year Link Volume		Forecast Future Year Turn Volume	
13 SR-173/SR-18						
Saturday Peak Hour						
Northbound	Left	0	Approach	0	Left	0
	Through	0	Departure	0	Through	0
	Right	0			Right	0
Southbound	Left	85	Approach	403	Left	150
	Through	0	Departure	596	Through	0
	Right	143			Right	253
Eastbound	Left	247	Approach	820	Left	437
	Through	292	Departure	584	Through	383
	Right	0			Right	0
Westbound	Left	0	Approach	490	Left	0
	Through	253	Departure	533	Through	331
	Right	90			Right	159
Sunday Peak Hour						
Northbound	Left	0	Approach	0	Left	0
	Through	0	Departure	0	Through	0
	Right	0			Right	0
Southbound	Left	45	Approach	324	Left	80
	Through	0	Departure	589	Through	0
	Right	138			Right	244
Eastbound	Left	216	Approach	588	Left	382
	Through	157	Departure	463	Through	206
	Right	0			Right	0
Westbound	Left	0	Approach	426	Left	0
	Through	167	Departure	286	Through	219
	Right	117			Right	207

Table B-17 - Year 2030 Intersection Turning Movements

	Saturday Peak Hour Volumes					Sunday Peak Hour Volumes				
	2030 Base	TT 15612	2030 Without Project	New Project Trips	Total Volume	2030 Base	TT 15612	2030 Without Project	New Project Trips	Total Volume
1 North Road/SR-189										
NBL	0		0	0	0	0		0	0	0
NBT	0		0	0	0	0		0	0	0
NBR	0		0	0	0	0		0	0	0
SBL	286		286	1	287	154		154	20	174
SBT	0		0	0	0	0		0	0	0
SBR	87		87	0	87	88		88	0	88
EBL	64		64	0	64	62		62	0	62
EBT	212	2	214	0	214	103	2	105	0	105
EBR	0		0	0	0	0		0	0	0
WBL	0		0	0	0	0		0	0	0
WBT	199	6	205	0	205	190	5	195	0	195
WBR	237		237	2	239	133		133	20	153
North Leg										
Approach	373	0	373	1	374	242	0	242	20	262
Departure	301	0	301	2	303	195	0	195	20	215
Total	674	0	674	3	677	437	0	437	40	477
South Leg										
Approach	0	0	0	0	0	0	0	0	0	0
Departure	0	0	0	0	0	0	0	0	0	0
Total	0	0	0	0	0	0	0	0	0	0
East Leg										
Approach	436	6	442	2	444	323	5	328	20	348
Departure	498	2	500	1	501	257	2	259	20	279
Total	934	8	942	3	945	580	7	587	40	627
West Leg										
Approach	276	2	278	0	278	165	2	167	0	167
Departure	286	6	292	0	292	278	5	283	0	283
Total	562	8	570	0	570	443	7	450	0	450
Total Approaches										
Approach	1,085	8	1,093	3	1,096	730	7	737	40	777
Departure	1,085	8	1,093	3	1,096	730	7	737	40	777
Total	2,170	16	2,186	6	2,192	1,460	14	1,474	80	1,554

Table B-17 - Year 2030 Intersection Turning Movements

	Saturday Peak Hour Volumes					Sunday Peak Hour Volumes				
	2030 Base	TT 15612	2030 Without Project	New Project Trips	Total Volume	2030 Base	TT 15612	2030 Without Project	New Project Trips	Total Volume
2 Bear Springs Road/SR-189										
NBL	35		35	2	37	19		19	20	39
NBT	30		30	0	30	30		30	0	30
NBR	24		24	0	24	15		15	0	15
SBL	60		60	0	60	58		58	0	58
SBT	23		23	0	23	23		23	0	23
SBR	104		104	0	104	99		99	0	99
EBL	111		111	0	111	71		71	0	71
EBT	282	2	284	0	284	187	2	189	0	189
EBR	54		54	1	55	34		34	20	54
WBL	17		17	0	17	19		19	0	19
WBT	273	6	279	0	279	232	5	237	0	237
WBR	55		55	0	55	32		32	0	32
North Leg										
Approach	187	0	187	0	187	180	0	180	0	180
Departure	196	0	196	0	196	133	0	133	0	133
Total	383	0	383	0	383	313	0	313	0	313
South Leg										
Approach	89	0	89	2	91	64	0	64	20	84
Departure	94	0	94	1	95	76	0	76	20	96
Total	183	0	183	3	186	140	0	140	40	180
East Leg										
Approach	345	6	351	0	351	283	5	288	0	288
Departure	366	2	368	0	368	260	2	262	0	262
Total	711	8	719	0	719	543	7	550	0	550
West Leg										
Approach	447	2	449	1	450	292	2	294	20	314
Departure	412	6	418	2	420	350	5	355	20	375
Total	859	8	867	3	870	642	7	649	40	689
Total Approaches										
Approach	1,068	8	1,076	3	1,079	819	7	826	40	866
Departure	1,068	8	1,076	3	1,079	819	7	826	40	866
Total	2,136	16	2,152	6	2,158	1,638	14	1,652	80	1,732

Table B-17 - Year 2030 Intersection Turning Movements

	Saturday Peak Hour Volumes					Sunday Peak Hour Volumes				
	2030 Base	TT 15612	2030 Without Project	New Project Trips	Total Volume	2030 Base	TT 15612	2030 Without Project	New Project Trips	Total Volume
3 Grass Valley Road/SR-189										
NBL	0		0	0	0	0		0	0	0
NBT	0		0	0	0	0		0	0	0
NBR	0		0	0	0	0		0	0	0
SBL	452	91	543	4	547	403	83	486	60	546
SBT	0		0	0	0	0		0	0	0
SBR	410	6	416	0	416	278	5	283	0	283
EBL	201	2	203	0	203	113	2	115	0	115
EBT	270		270	0	270	204		204	0	204
EBR	0		0	0	0	0		0	0	0
WBL	0		0	0	0	0		0	0	0
WBT	110		110	0	110	69		69	0	69
WBR	253	35	288	5	293	149	32	181	60	241
North Leg										
Approach	862	97	959	4	963	681	88	769	60	829
Departure	454	37	491	5	496	262	34	296	60	356
Total	1,316	134	1,450	9	1,459	943	122	1,065	120	1,185
South Leg										
Approach	0	0	0	0	0	0	0	0	0	0
Departure	0	0	0	0	0	0	0	0	0	0
Total	0	0	0	0	0	0	0	0	0	0
East Leg										
Approach	363	35	398	5	403	218	32	250	60	310
Departure	722	91	813	4	817	607	83	690	60	750
Total	1,085	126	1,211	9	1,220	825	115	940	120	1,060
West Leg										
Approach	471	2	473	0	473	317	2	319	0	319
Departure	520	6	526	0	526	347	5	352	0	352
Total	991	8	999	0	999	664	7	671	0	671
Total Approaches										
Approach	1,696	134	1,830	9	1,839	1,216	122	1,338	120	1,458
Departure	1,696	134	1,830	9	1,839	1,216	122	1,338	120	1,458
Total	3,392	268	3,660	18	3,678	2,432	244	2,676	240	2,916

Table B-17 - Year 2030 Intersection Turning Movements

	Saturday Peak Hour Volumes					Sunday Peak Hour Volumes				
	2030 Base	TT 15612	2030 Without Project	New Project Trips	Total Volume	2030 Base	TT 15612	2030 Without Project	New Project Trips	Total Volume
4 Daley Canyon Road/SR-189										
NBL	267	31	298	5	303	156	28	184	60	244
NBT	572		572	8	580	272		272	100	372
NBR	0		0	0	0	0		0	0	0
SBL	0		0	0	0	0		0	0	0
SBT	426		426	7	433	465		465	100	565
SBR	97		97	0	97	51		51	0	51
EBL	401		401	0	401	240		240	0	240
EBT	0		0	0	0	0		0	0	0
EBR	324	91	415	4	419	329	83	412	60	472
WBL	0		0	0	0	0		0	0	0
WBT	0		0	0	0	0		0	0	0
WBR	0		0	0	0	0		0	0	0
North Leg										
Approach	523	0	523	7	530	516	0	516	100	616
Departure	973	0	973	8	981	512	0	512	100	612
Total	1,496	0	1,496	15	1,511	1,028	0	1,028	200	1,228
South Leg										
Approach	839	31	870	13	883	428	28	456	160	616
Departure	750	91	841	11	852	794	83	877	160	1,037
Total	1,589	122	1,711	24	1,735	1,222	111	1,333	320	1,653
East Leg										
Approach	0	0	0	0	0	0	0	0	0	0
Departure	0	0	0	0	0	0	0	0	0	0
Total	0	0	0	0	0	0	0	0	0	0
West Leg										
Approach	725	91	816	4	820	569	83	652	60	712
Departure	364	31	395	5	400	207	28	235	60	295
Total	1,089	122	1,211	9	1,220	776	111	887	120	1,007
Total Approaches										
Approach	2,087	122	2,209	24	2,233	1,513	111	1,624	320	1,944
Departure	2,087	122	2,209	24	2,233	1,513	111	1,624	320	1,944
Total	4,174	244	4,418	48	4,466	3,026	222	3,248	640	3,888

Table B-17 - Year 2030 Intersection Turning Movements

	Saturday Peak Hour Volumes					Sunday Peak Hour Volumes				
	2030 Base	TT 15612	2030 Without Project	New Project Trips	Total Volume	2030 Base	TT 15612	2030 Without Project	New Project Trips	Total Volume
5 North Bay Road/SR-189										
NBL	0		0	0	0	0		0	0	0
NBT	0		0	0	0	0		0	0	0
NBR	0		0	0	0	0		0	0	0
SBL	235		235	0	235	126		126	0	126
SBT	0		0	0	0	0		0	0	0
SBR	468		468	3	471	410		410	40	450
EBL	496		496	3	499	293		293	40	333
EBT	406	6	412	5	417	248	5	253	60	313
EBR	0		0	0	0	0		0	0	0
WBL	0		0	0	0	0		0	0	0
WBT	279	2	281	4	285	244	2	246	60	306
WBR	177		177	0	177	138		138	0	138
North Leg										
Approach	703	0	703	3	706	536	0	536	40	576
Departure	673	0	673	3	676	431	0	431	40	471
Total	1,376	0	1,376	6	1,382	967	0	967	80	1,047
South Leg										
Approach	0	0	0	0	0	0	0	0	0	0
Departure	0	0	0	0	0	0	0	0	0	0
Total	0	0	0	0	0	0	0	0	0	0
East Leg										
Approach	456	2	458	4	462	382	2	384	60	444
Departure	641	6	647	5	652	374	5	379	60	439
Total	1,097	8	1,105	9	1,114	756	7	763	120	883
West Leg										
Approach	902	6	908	8	916	541	5	546	100	646
Departure	747	2	749	7	756	654	2	656	100	756
Total	1,649	8	1,657	15	1,672	1,195	7	1,202	200	1,402
Total Approaches										
Approach	2,061	8	2,069	15	2,084	1,459	7	1,466	200	1,666
Departure	2,061	8	2,069	15	2,084	1,459	7	1,466	200	1,666
Total	4,122	16	4,138	30	4,168	2,918	14	2,932	400	3,332

Table B-17 - Year 2030 Intersection Turning Movements

	Saturday Peak Hour Volumes					Sunday Peak Hour Volumes				
	2030 Base	TT 15612	2030 Without Project	New Project Trips	Total Volume	2030 Base	TT 15612	2030 Without Project	New Project Trips	Total Volume
6 Lake Gregory Drive/SR-189										
NBL	0		0	0	0	0		0	0	0
NBT	257		257	5	262	153		153	60	213
NBR	86		86	0	86	51		51	0	51
SBL	131		131	0	131	84		84	0	84
SBT	351		351	4	355	181		181	60	241
SBR	0		0	0	0	0		0	0	0
EBL	0		0	0	0	0		0	0	0
EBT	0		0	0	0	0		0	0	0
EBR	0		0	0	0	0		0	0	0
WBL	93		93	0	93	198		198	0	198
WBT	0		0	0	0	0		0	0	0
WBR	107		107	0	107	96		96	0	96
North Leg										
Approach	482	0	482	4	486	265	0	265	60	325
Departure	364	0	364	5	369	249	0	249	60	309
Total	846	0	846	9	855	514	0	514	120	634
South Leg										
Approach	343	0	343	5	348	204	0	204	60	264
Departure	444	0	444	4	448	379	0	379	60	439
Total	787	0	787	9	796	583	0	583	120	703
East Leg										
Approach	200	0	200	0	200	294	0	294	0	294
Departure	217	0	217	0	217	135	0	135	0	135
Total	417	0	417	0	417	429	0	429	0	429
West Leg										
Approach	0	0	0	0	0	0	0	0	0	0
Departure	0	0	0	0	0	0	0	0	0	0
Total	0	0	0	0	0	0	0	0	0	0
Total Approaches										
Approach	1,025	0	1,025	9	1,034	763	0	763	120	883
Departure	1,025	0	1,025	9	1,034	763	0	763	120	883
Total	2,050	0	2,050	18	2,068	1,526	0	1,526	240	1,766

Table B-17 - Year 2030 Intersection Turning Movements

	Saturday Peak Hour Volumes					Sunday Peak Hour Volumes				
	2030 Base	TT 15612	2030 Without Project	New Project Trips	Total Volume	2030 Base	TT 15612	2030 Without Project	New Project Trips	Total Volume
7 Lake Gregory Drive/SR-18										
NBL	0		0	0	0	0		0	0	0
NBT	0		0	0	0	0		0	0	0
NBR	0		0	0	0	0		0	0	0
SBL	327		327	4	331	179		179	60	239
SBT	0		0	0	0	0		0	0	0
SBR	118		118	0	118	199		199	0	199
EBL	148		148	0	148	71		71	0	71
EBT	538	27	565	3	568	304	25	329	40	369
EBR	0		0	0	0	0		0	0	0
WBL	0		0	0	0	0		0	0	0
WBT	481	81	562	3	565	545	74	619	40	659
WBR	195		195	5	200	133		133	60	193
North Leg										
Approach	445	0	445	4	449	378	0	378	60	438
Departure	343	0	343	5	348	204	0	204	60	264
Total	788	0	788	9	797	582	0	582	120	702
South Leg										
Approach	0	0	0	0	0	0	0	0	0	0
Departure	0	0	0	0	0	0	0	0	0	0
Total	0	0	0	0	0	0	0	0	0	0
East Leg										
Approach	676	81	757	8	765	678	74	752	100	852
Departure	865	27	892	7	899	483	25	508	100	608
Total	1,541	108	1,649	15	1,664	1,161	99	1,260	200	1,460
West Leg										
Approach	686	27	713	3	716	375	25	400	40	440
Departure	599	81	680	3	683	744	74	818	40	858
Total	1,285	108	1,393	6	1,399	1,119	99	1,218	80	1,298
Total Approaches										
Approach	1,807	108	1,915	15	1,930	1,431	99	1,530	200	1,730
Departure	1,807	108	1,915	15	1,930	1,431	99	1,530	200	1,730
Total	3,614	216	3,830	30	3,860	2,862	198	3,060	400	3,460

Table B-17 - Year 2030 Intersection Turning Movements

	Saturday Peak Hour Volumes					Sunday Peak Hour Volumes				
	2030 Base	TT 15612	2030 Without Project	New Project Trips	Total Volume	2030 Base	TT 15612	2030 Without Project	New Project Trips	Total Volume
8 Bear Springs Road/SR-18										
NBL	2		2	0	2	27		27	0	27
NBT	0		0	0	0	0		0	0	0
NBR	7		7	0	7	27		27	0	27
SBL	73		73	3	76	23		23	40	63
SBT	0		0	0	0	7		7	0	7
SBR	53		53	0	53	34		34	0	34
EBL	82		82	0	82	29		29	0	29
EBT	937	27	964	7	971	618	25	643	100	743
EBR	2		2	0	2	23		23	0	23
WBL	16		16	0	16	18		18	0	18
WBT	794	81	875	8	883	614	74	688	100	788
WBR	44		44	3	47	25		25	40	65
North Leg										
Approach	126	0	126	3	129	64	0	64	40	104
Departure	126	0	126	3	129	54	0	54	40	94
Total	252	0	252	6	258	118	0	118	80	198
South Leg										
Approach	9	0	9	0	9	54	0	54	0	54
Departure	18	0	18	0	18	48	0	48	0	48
Total	27	0	27	0	27	102	0	102	0	102
East Leg										
Approach	854	81	935	11	946	657	74	731	140	871
Departure	1,017	27	1,044	10	1,054	668	25	693	140	833
Total	1,871	108	1,979	21	2,000	1,325	99	1,424	280	1,704
West Leg										
Approach	1,021	27	1,048	7	1,055	670	25	695	100	795
Departure	849	81	930	8	938	675	74	749	100	849
Total	1,870	108	1,978	15	1,993	1,345	99	1,444	200	1,644
Total Approaches										
Approach	2,010	108	2,118	21	2,139	1,445	99	1,544	280	1,824
Departure	2,010	108	2,118	21	2,139	1,445	99	1,544	280	1,824
Total	4,020	216	4,236	42	4,278	2,890	198	3,088	560	3,648

Table B-17 - Year 2030 Intersection Turning Movements

	Saturday Peak Hour Volumes					Sunday Peak Hour Volumes				
	2030 Base	TT 15612	2030 Without Project	New Project Trips	Total Volume	2030 Base	TT 15612	2030 Without Project	New Project Trips	Total Volume
9 Project Access/SR-18										
NBL	0	0	0	0	0	0	0	0	0	0
NBT	0	0	0	0	0	0	0	0	0	0
NBR	0	0	0	0	0	0	0	0	0	0
SBL	0	0	0	20	20	0	0	0	260	260
SBT	0	0	0	0	0	0	0	0	0	0
SBR	0	0	0	11	11	0	0	0	140	140
EBL	0	0	0	10	10	0	0	0	140	140
EBT	1,149	27	1,176	0	1,176	647	25	672	0	672
EBR	0	0	0	0	0	0	0	0	0	0
WBL	0	0	0	0	0	0	0	0	0	0
WBT	930	81	1,011	0	1,011	887	74	961	0	961
WBR	0	0	0	18	18	0	0	0	260	260
North Leg										
Approach	0	0	0	31	31	0	0	0	400	400
Departure	0	0	0	28	28	0	0	0	400	400
Total	0	0	0	59	59	0	0	0	800	800
South Leg										
Approach	0	0	0	0	0	0	0	0	0	0
Departure	0	0	0	0	0	0	0	0	0	0
Total	0	0	0	0	0	0	0	0	0	0
East Leg										
Approach	930	81	1,011	18	1,029	887	74	961	260	1,221
Departure	1,149	27	1,176	20	1,196	647	25	672	260	932
Total	2,079	108	2,187	38	2,225	1,534	99	1,633	520	2,153
West Leg										
Approach	1,149	27	1,176	10	1,186	647	25	672	140	812
Departure	930	81	1,011	11	1,022	887	74	961	140	1,101
Total	2,079	108	2,187	21	2,208	1,534	99	1,633	280	1,913
Total Approaches										
Approach	2,079	108	2,187	59	2,246	1,534	99	1,633	800	2,433
Departure	2,079	108	2,187	59	2,246	1,534	99	1,633	800	2,433
Total	4,158	216	4,374	118	4,492	3,068	198	3,266	1,600	4,866

Table B-17 - Year 2030 Intersection Turning Movements

	Saturday Peak Hour Volumes					Sunday Peak Hour Volumes				
	2030 Base	TT 15612	2030 Without Project	New Project Trips	Total Volume	2030 Base	TT 15612	2030 Without Project	New Project Trips	Total Volume
10 Daley Canyon Road/SR-18										
NBL	0		0	0	0	0		0	0	0
NBT	0		0	0	0	0		0	0	0
NBR	0		0	0	0	0		0	0	0
SBL	0		0	0	0	0		0	0	0
SBT	0		0	0	0	0		0	0	0
SBR	496	81	577	11	588	503	74	577	160	737
EBL	537	27	564	12	576	302	25	327	160	487
EBT	612		612	8	620	345		345	100	445
EBR	0		0	0	0	0		0	0	0
WBL	0		0	0	0	0		0	0	0
WBT	434		434	7	441	384		384	100	484
WBR	0		0	0	0	0		0	0	0
North Leg										
Approach	496	81	577	11	588	503	74	577	160	737
Departure	537	27	564	12	576	302	25	327	160	487
Total	1,033	108	1,141	23	1,164	805	99	904	320	1,224
South Leg										
Approach	0	0	0	0	0	0	0	0	0	0
Departure	0	0	0	0	0	0	0	0	0	0
Total	0	0	0	0	0	0	0	0	0	0
East Leg										
Approach	434	0	434	7	441	384	0	384	100	484
Departure	612	0	612	8	620	345	0	345	100	445
Total	1,046	0	1,046	15	1,061	729	0	729	200	929
West Leg										
Approach	1,149	27	1,176	20	1,196	647	25	672	260	932
Departure	930	81	1,011	18	1,029	887	74	961	260	1,221
Total	2,079	108	2,187	38	2,225	1,534	99	1,633	520	2,153
Total Approaches										
Approach	2,079	108	2,187	38	2,225	1,534	99	1,633	520	2,153
Departure	2,079	108	2,187	38	2,225	1,534	99	1,633	520	2,153
Total	4,158	216	4,374	76	4,450	3,068	198	3,266	1,040	4,306

Table B-17 - Year 2030 Intersection Turning Movements

	Saturday Peak Hour Volumes					Sunday Peak Hour Volumes				
	2030 Base	TT 15612	2030 Without Project	New Project Trips	Total Volume	2030 Base	TT 15612	2030 Without Project	New Project Trips	Total Volume
11 Daley Cnyn Rd/Daley Cnyn Access										
NBL	0		0	0	0	0		0	0	0
NBT	537	27	564	12	576	302	25	327	160	487
NBR	0		0	0	0	0		0	0	0
SBL	270	10	280	0	280	298	9	307	0	307
SBT	496	81	577	11	588	503	74	577	160	737
SBR	0		0	0	0	0		0	0	0
EBL	0		0	0	0	0		0	0	0
EBT	0		0	0	0	0		0	0	0
EBR	0		0	0	0	0		0	0	0
WBL	0		0	0	0	0		0	0	0
WBT	0		0	0	0	0		0	0	0
WBR	270	4	274	0	274	246	3	249	0	249
North Leg										
Approach	766	91	857	11	868	801	83	884	160	1,044
Departure	807	31	838	12	850	548	28	576	160	736
Total	1,573	122	1,695	23	1,718	1,349	111	1,460	320	1,780
South Leg										
Approach	537	27	564	12	576	302	25	327	160	487
Departure	496	81	577	11	588	503	74	577	160	737
Total	1,033	108	1,141	23	1,164	805	99	904	320	1,224
East Leg										
Approach	270	4	274	0	274	246	3	249	0	249
Departure	270	10	280	0	280	298	9	307	0	307
Total	540	14	554	0	554	544	12	556	0	556
West Leg										
Approach	0	0	0	0	0	0	0	0	0	0
Departure	0	0	0	0	0	0	0	0	0	0
Total	0	0	0	0	0	0	0	0	0	0
Total Approaches										
Approach	1,573	122	1,695	23	1,718	1,349	111	1,460	320	1,780
Departure	1,573	122	1,695	23	1,718	1,349	111	1,460	320	1,780
Total	3,146	244	3,390	46	3,436	2,698	222	2,920	640	3,560

Table B-17 - Year 2030 Intersection Turning Movements

	Saturday Peak Hour Volumes					Sunday Peak Hour Volumes				
	2030 Base	TT 15612	2030 Without Project	New Project Trips	Total Volume	2030 Base	TT 15612	2030 Without Project	New Project Trips	Total Volume
12 Daley Canyon Access Road/SR-18										
NBL	0		0	0	0	0		0	0	0
NBT	0		0	0	0	0		0	0	0
NBR	0		0	0	0	0		0	0	0
SBL	270	10	280	0	280	298	9	307	0	307
SBT	0		0	0	0	0		0	0	0
SBR	0		0	0	0	0		0	0	0
EBL	0		0	0	0	0		0	0	0
EBT	612		612	8	620	345		345	100	445
EBR	0		0	0	0	0		0	0	0
WBL	0		0	0	0	0		0	0	0
WBT	434		434	7	441	384		384	100	484
WBR	270	4	274	0	274	246	3	249	0	249
North Leg										
Approach	270	10	280	0	280	298	9	307	0	307
Departure	270	4	274	0	274	246	3	249	0	249
Total	540	14	554	0	554	544	12	556	0	556
South Leg										
Approach	0	0	0	0	0	0	0	0	0	0
Departure	0	0	0	0	0	0	0	0	0	0
Total	0	0	0	0	0	0	0	0	0	0
East Leg										
Approach	704	4	708	7	715	630	3	633	100	733
Departure	882	10	892	8	900	643	9	652	100	752
Total	1,586	14	1,600	15	1,615	1,273	12	1,285	200	1,485
West Leg										
Approach	612	0	612	8	620	345	0	345	100	445
Departure	434	0	434	7	441	384	0	384	100	484
Total	1,046	0	1,046	15	1,061	729	0	729	200	929
Total Approaches										
Approach	1,586	14	1,600	15	1,615	1,273	12	1,285	200	1,485
Departure	1,586	14	1,600	15	1,615	1,273	12	1,285	200	1,485
Total	3,172	28	3,200	30	3,230	2,546	24	2,570	400	2,970

Table B-17 - Year 2030 Intersection Turning Movements

	Saturday Peak Hour Volumes					Sunday Peak Hour Volumes				
	2030 Base	TT 15612	2030 Without Project	New Project Trips	Total Volume	2030 Base	TT 15612	2030 Without Project	New Project Trips	Total Volume
13 SR-173/SR-18										
NBL	0		0	0	0	0		0	0	0
NBT	0		0	0	0	0		0	0	0
NBR	0		0	0	0	0		0	0	0
SBL	150		150	0	150	80		80	0	80
SBT	0		0	0	0	0		0	0	0
SBR	253		253	4	257	244		244	60	304
EBL	437		437	5	442	382		382	60	442
EBT	383	10	393	2	395	206	9	215	20	235
EBR	0		0	0	0	0		0	0	0
WBL	0		0	0	0	0		0	0	0
WBT	331	4	335	1	336	219	3	222	20	242
WBR	159		159	0	159	207		207	0	207
North Leg										
Approach	403	0	403	4	407	324	0	324	60	384
Departure	596	0	596	5	601	589	0	589	60	649
Total	999	0	999	9	1,008	913	0	913	120	1,033
South Leg										
Approach	0	0	0	0	0	0	0	0	0	0
Departure	0	0	0	0	0	0	0	0	0	0
Total	0	0	0	0	0	0	0	0	0	0
East Leg										
Approach	490	4	494	1	495	426	3	429	20	449
Departure	533	10	543	2	545	286	9	295	20	315
Total	1,023	14	1,037	3	1,040	712	12	724	40	764
West Leg										
Approach	820	10	830	7	837	588	9	597	80	677
Departure	584	4	588	5	593	463	3	466	80	546
Total	1,404	14	1,418	12	1,430	1,051	12	1,063	160	1,223
Total Approaches										
Approach	1,713	14	1,727	12	1,739	1,338	12	1,350	160	1,510
Departure	1,713	14	1,727	12	1,739	1,338	12	1,350	160	1,510
Total	3,426	28	3,454	24	3,478	2,676	24	2,700	320	3,020

Table B-17 - Year 2030 Intersection Turning Movements

	Saturday Peak Hour Volumes					Sunday Peak Hour Volumes				
	2030 Base	TT 15612	2030 Without Project	New Project Trips	Total Volume	2030 Base	TT 15612	2030 Without Project	New Project Trips	Total Volume
Daley Canyon Road/SR-18 Reconfiguration										
NBL	0			0	0	0			0	0
NBT	0			0	0	0			0	0
NBR	0			0	0	0			0	0
SBL	270			0	270	298			0	0
SBT	0			0	0	0			0	0
SBR	496			11	507	503			160	160
EBL	537			12	549	302			160	160
EBT	612			8	620	345			100	100
EBR	0			0	0	0			0	0
WBL	0			0	0	0			0	0
WBT	434			7	441	384			100	100
WBR	270			0	270	246			0	0
North Leg										
Approach	766			11	777	801			160	160
Departure	807			12	819	548			160	160
Total	1,573			23	1,596	1,349			320	320
South Leg										
Approach	0			0	0	0			0	0
Departure	0			0	0	0			0	0
Total	0			0	0	0			0	0
East Leg										
Approach	704			7	711	630			100	100
Departure	882			8	890	643			100	100
Total	1,586			15	1,601	1,273			200	200
West Leg										
Approach	1,149			20	1,169	647			260	260
Departure	930			18	948	887			260	260
Total	2,079			38	2,117	1,534			520	520
Total Approaches										
Approach	2,619			38	2,657	2,078			520	520
Departure	2,619			38	2,657	2,078			520	520
Total	5,238			76	5,314	4,156			1,040	1,040

APPENDIX C

LEVEL OF SERVICE CALCULATION WORKSHEETS

EXISTING (2007) CONDITIONS

Church of the Woods
Existing (2007) Traffic Conditions
Saturday Peak Hour

Level Of Service Computation Report
2000 HCM Unsignalized Method (Base Volume Alternative)

Intersection #1 North Road/State Route 189

Average Delay (sec/veh): 7.0 Worst Case Level Of Service: C[19.0]

Approach:	North Bound					South Bound					East Bound					West Bound				
Movement:	L	-	T	-	R	L	-	T	-	R	L	-	T	-	R	L	-	T	-	R
Control:	Stop Sign					Stop Sign					Uncontrolled					Uncontrolled				
Rights:	Include					Include					Include					Include				
Lanes:	0	0	0	0	0	0	0	1!	0	0	0	1	0	0	0	0	0	0	1	0
Volume Module:																				
Base Vol:	0	0	0	162	0	49	36	162	0	0	152	134								
Growth Adj:	1.00	1.00	1.00	1.00	1.00	1.00	1.00	1.00	1.00	1.00	1.00	1.00								
Initial Bse:	0	0	0	162	0	49	36	162	0	0	152	134								
User Adj:	1.00	1.00	1.00	1.00	1.00	1.00	1.00	1.00	1.00	1.00	1.00	1.00								
PHF Adj:	1.00	1.00	1.00	0.71	0.71	0.71	0.82	0.82	0.82	0.90	0.90	0.90								
PHF Volume:	0	0	0	228	0	69	44	197	0	0	168	148								
Reduct Vol:	0	0	0	0	0	0	0	0	0	0	0	0								
FinalVolume:	0	0	0	228	0	69	44	197	0	0	168	148								
Critical Gap Module:																				
Critical Gp:	xxxxx	xxxx	xxxxx	6.4	6.5	6.2	4.1	xxxx	xxxxx	xxxxx	xxxx	xxxxx								
FollowUpTim:	xxxxx	xxxx	xxxxx	3.5	4.0	3.3	2.2	xxxx	xxxxx	xxxxx	xxxx	xxxxx								
Capacity Module:																				
Cnflict Vol:	xxxx	xxxx	xxxxx	527	527	243	317	xxxx	xxxxx	xxxx	xxxx	xxxxx								
Potent Cap.:	xxxx	xxxx	xxxxx	515	459	801	1255	xxxx	xxxxx	xxxx	xxxx	xxxxx								
Move Cap.:	xxxx	xxxx	xxxxx	501	443	801	1255	xxxx	xxxxx	xxxx	xxxx	xxxxx								
Volume/Cap:	xxxx	xxxx	xxxx	0.45	0.00	0.09	0.03	xxxx	xxxx	xxxx	xxxx	xxxx								
Level Of Service Module:																				
2Way95thQ:	xxxx	xxxx	xxxxx	xxxx	xxxx	xxxxx	0.1	xxxx	xxxxx	xxxx	xxxx	xxxxx								
Control Del:	xxxxx	xxxx	xxxxx	xxxxx	xxxx	xxxxx	8.0	xxxx	xxxxx	xxxxx	xxxx	xxxxx								
LOS by Move:	*	*	*	*	*	*	A	*	*	*	*	*								
Movement:	LT	-	LTR	-	RT	LT	-	LTR	-	RT	LT	-	LTR	-	RT	LT	-	LTR	-	RT
Shared Cap.:	xxxx	xxxx	xxxxx	xxxx	549	xxxxx	xxxx	xxxx	xxxxx	xxxx	xxxx	xxxxx								
SharedQueue:	xxxxx	xxxx	xxxxx	xxxxx	3.2	xxxxx	0.1	xxxx	xxxxx	xxxxx	xxxx	xxxxx								
Shrd ConDel:	xxxxx	xxxx	xxxxx	xxxxx	19.0	xxxxx	8.0	xxxx	xxxxx	xxxxx	xxxx	xxxxx								
Shared LOS:	*	*	*	*	C	*	A	*	*	*	*	*								
ApproachDel:	xxxxxx			19.0			xxxxxx			xxxxxx										
ApproachLOS:	*			C			*			*										

Note: Queue reported is the number of cars per lane.

Church of the Woods
Existing (2007) Traffic Conditions
Saturday Peak Hour

Level Of Service Computation Report
2000 HCM Unsignalized Method (Base Volume Alternative)

Intersection #2 Bear Springs Road/State Route 189

Average Delay (sec/veh): 4.6 Worst Case Level Of Service: C[16.8]

Approach:	North Bound						South Bound						East Bound						West Bound					
Movement:	L	-	T	-	R		L	-	T	-	R		L	-	T	-	R		L	-	T	-	R	
Control:	Stop Sign						Stop Sign						Uncontrolled						Uncontrolled					
Rights:	Include						Include						Include						Include					
Lanes:	0	0	1!	0	0		0	0	1!	0	0		0	0	1!	0	0		0	0	1!	0	0	
Volume Module:																								
Base Vol:	20	13	14	34	10	59	63	214	31	10	208	31												
Growth Adj:	1.00	1.00	1.00	1.00	1.00	1.00	1.00	1.00	1.00	1.00	1.00	1.00												
Initial Bse:	20	13	14	34	10	59	63	214	31	10	208	31												
User Adj:	1.00	1.00	1.00	1.00	1.00	1.00	1.00	1.00	1.00	1.00	1.00	1.00												
PHF Adj:	0.66	0.66	0.66	0.80	0.80	0.80	0.86	0.86	0.86	0.91	0.91	0.91												
PHF Volume:	30	20	21	43	13	74	73	248	36	11	229	34												
Reduct Vol:	0	0	0	0	0	0	0	0	0	0	0	0												
FinalVolume:	30	20	21	43	13	74	73	248	36	11	229	34												
Critical Gap Module:																								
Critical Gp:	7.1	6.5	6.2	7.1	6.5	6.2	4.1	xxxx	xxxxx	4.1	xxxx	xxxxx												
FollowUpTim:	3.5	4.0	3.3	3.5	4.0	3.3	2.2	xxxx	xxxxx	2.2	xxxx	xxxxx												
Capacity Module:																								
Cnflict Vol:	723	697	266	700	698	246	264	xxxx	xxxxx	284	xxxx	xxxxx												
Potent Cap.:	344	367	778	356	367	797	1312	xxxx	xxxxx	1290	xxxx	xxxxx												
Move Cap.:	288	343	778	315	343	797	1312	xxxx	xxxxx	1290	xxxx	xxxxx												
Volume/Cap:	0.10	0.06	0.03	0.13	0.04	0.09	0.06	xxxx	xxxx	0.01	xxxx	xxxx												
Level Of Service Module:																								
2Way95thQ:	xxxx	xxxx	xxxxx	xxxx	xxxx	xxxxx	0.2	xxxx	xxxxx	0.0	xxxx	xxxxx												
Control Del:	xxxxx	xxxx	xxxxx	xxxxx	xxxx	xxxxx	7.9	xxxx	xxxxx	7.8	xxxx	xxxxx												
LOS by Move:	*	*	*	*	*	*	A	*	*	A	*	*												
Movement:	LT	-	LTR	-	RT		LT	-	LTR	-	RT		LT	-	LTR	-	RT		LT	-	LTR	-	RT	
Shared Cap.:	xxxx	375	xxxxx	xxxx	488	xxxxx	xxxx	xxxx	xxxxx	xxxx	xxxx	xxxxx												
SharedQueue:	xxxxx	0.7	xxxxx	xxxxx	1.1	xxxxx	xxxxx	xxxx	xxxxx	xxxxx	xxxx	xxxxx												
Shrd ConDel:	xxxxx	16.8	xxxxx	xxxxx	15.0	xxxxx	xxxxx	xxxx	xxxxx	xxxxx	xxxx	xxxxx												
Shared LOS:	*	C	*	*	C	*	*	*	*	*	*	*												
ApproachDel:	16.8			15.0			xxxxxx			xxxxxx														
ApproachLOS:	C			C			*			*														

Note: Queue reported is the number of cars per lane.

Church of the Woods
Existing (2007) Traffic Conditions
Saturday Peak Hour

Level Of Service Computation Report
2000 HCM Unsignalized Method (Base Volume Alternative)

Intersection #3 Grass Valley Road/State Route 189

Average Delay (sec/veh): 39.7 Worst Case Level Of Service: F[82.9]

Approach:	North Bound					South Bound					East Bound					West Bound				
Movement:	L	-	T	-	R	L	-	T	-	R	L	-	T	-	R	L	-	T	-	R
Control:	Stop Sign					Stop Sign					Uncontrolled					Uncontrolled				
Rights:	Include					Include					Include					Include				
Lanes:	0	0	0	0	0	0	0	1!	0	0	1	0	1	0	0	0	0	0	1	0
Volume Module:																				
Base Vol:	0	0	0			256	0			232	114	206		0		0		84		143
Growth Adj:	1.00	1.00	1.00			1.00	1.00			1.00	1.00	1.00		1.00		1.00		1.00		1.00
Initial Bse:	0	0	0			256	0			232	114	206		0		0		84		143
User Adj:	1.00	1.00	1.00			1.00	1.00			1.00	1.00	1.00		1.00		1.00		1.00		1.00
PHF Adj:	1.00	1.00	1.00			0.81	0.81			0.81	0.78	0.78		0.78		0.83		0.83		0.83
PHF Volume:	0	0	0			316	0			286	147	265		0		0		101		172
Reduct Vol:	0	0	0			0	0			0	0	0		0		0		0		0
FinalVolume:	0	0	0			316	0			286	147	265		0		0		101		172
Critical Gap Module:																				
Critical Gp:	xxxxx	xxxx	xxxxx			6.4	6.5			6.2	4.1	xxxx	xxxxx	xxxxx		xxxx		xxxxx		
FollowUpTim:	xxxxx	xxxx	xxxxx			3.5	4.0			3.3	2.2	xxxx	xxxxx	xxxxx		xxxx		xxxxx		
Capacity Module:																				
Cnflict Vol:	xxxx	xxxx	xxxxx			745	745			187	273	xxxx	xxxxx	xxxx		xxxx		xxxxx		
Potent Cap.:	xxxx	xxxx	xxxxx			384	345			860	1302	xxxx	xxxxx	xxxx		xxxx		xxxxx		
Move Cap.:	xxxx	xxxx	xxxxx			351	306			860	1302	xxxx	xxxxx	xxxx		xxxx		xxxxx		
Total Cap:	239	348	xxxxx			431	382			xxxxx	xxxx	xxxx	xxxxx	xxxx		xxxx		xxxxx		
Volume/Cap:	xxxx	xxxx	xxxx			0.73	0.00			0.33	0.11	xxxx	xxxx	xxxx		xxxx		xxxx		
Level Of Service Module:																				
2Way95thQ:	xxxx	xxxx	xxxxx			xxxx	xxxx			xxxxx	0.4	xxxx	xxxxx	xxxx		xxxx		xxxxx		
Control Del:	xxxxx	xxxx	xxxxx			xxxxx	xxxx			xxxxx	8.1	xxxx	xxxxx	xxxxx		xxxx		xxxxx		
LOS by Move:	*	*	*			*	*			*	A	*	*	*		*		*		
Movement:	LT	-	LTR	-	RT	LT	-	LTR	-	RT	LT	-	LTR	-	RT	LT	-	LTR	-	RT
Shared Cap.:	xxxx	xxxx	xxxxx			xxxx	565			xxxxx	xxxx	xxxx	xxxxx	xxxx		xxxx		xxxxx		
SharedQueue:	xxxxx	xxxx	xxxxx			xxxxx	17.5			xxxxx	xxxxx	xxxx	xxxxx	xxxxx		xxxx		xxxxx		
Shrd ConDel:	xxxxx	xxxx	xxxxx			xxxxx	82.9			xxxxx	xxxxx	xxxx	xxxxx	xxxxx		xxxx		xxxxx		
Shared LOS:	*	*	*			*	F			*	*	*	*	*		*		*		
ApproachDel:	xxxxxx					82.9					xxxxxx					xxxxxx				
ApproachLOS:	*					F					*					*				

Note: Queue reported is the number of cars per lane.

Church of the Woods
Existing (2007) Traffic Conditions
Saturday Peak Hour

Level Of Service Computation Report
2000 HCM 4-Way Stop Method (Base Volume Alternative)

Intersection #4 Daley Canyon Road/State Route 189

Cycle (sec):	100	Critical Vol./Cap.(X):	0.945
Loss Time (sec):	0 (Y+R=4.0 sec)	Average Delay (sec/veh):	41.0
Optimal Cycle:	0	Level Of Service:	E

Approach:	North Bound				South Bound				East Bound				West Bound			
Movement:	L	- T	- R		L	- T	- R		L	- T	- R		L	- T	- R	
Control:	Stop Sign				Stop Sign				Stop Sign				Stop Sign			
Rights:	Include				Include				Include				Include			
Min. Green:	10	10	10	10	10	10	10	10	10	10	10	10	10	10	10	10
Lanes:	0	1	0	0	0	0	0	0	1	0	0	0	1!	0	0	0
Volume Module:																
Base Vol:	151	324	0	0	241	74	306	0	183	0	0	0				
Growth Adj:	1.00	1.00	1.00	1.00	1.00	1.00	1.00	1.00	1.00	1.00	1.00	1.00				
Initial Bse:	151	324	0	0	241	74	306	0	183	0	0	0				
User Adj:	1.00	1.00	1.00	1.00	1.00	1.00	1.00	1.00	1.00	1.00	1.00	1.00				
PHF Adj:	0.91	0.91	0.91	0.90	0.90	0.90	0.89	0.89	0.89	1.00	1.00	1.00				
PHF Volume:	167	358	0	0	267	82	342	0	205	0	0	0				
Reduct Vol:	0	0	0	0	0	0	0	0	0	0	0	0				
Reduced Vol:	167	358	0	0	267	82	342	0	205	0	0	0				
PCE Adj:	1.00	1.00	1.00	1.00	1.00	1.00	1.00	1.00	1.00	1.00	1.00	1.00				
MLF Adj:	1.00	1.00	1.00	1.00	1.00	1.00	1.00	1.00	1.00	1.00	1.00	1.00				
FinalVolume:	167	358	0	0	267	82	342	0	205	0	0	0				
Saturation Flow Module:																
Adjustment:	1.00	1.00	1.00	1.00	1.00	1.00	1.00	1.00	1.00	1.00	1.00	1.00				
Lanes:	0.32	0.68	0.00	0.00	0.77	0.23	0.63	0.00	0.37	0.00	0.00	0.00				
Final Sat.:	178	383	0	0	411	126	362	0	217	0	0	0				
Capacity Analysis Module:																
Vol/Sat:	0.94	0.94	xxxx	xxxx	0.65	0.65	0.95	xxxx	0.95	xxxx	xxxx	xxxx				
Crit Moves:		****			****		****									
Delay/Veh:	47.6	47.6	0.0	0.0	19.9	19.9	48.1	0.0	48.1	0.0	0.0	0.0				
Delay Adj:	1.00	1.00	1.00	1.00	1.00	1.00	1.00	1.00	1.00	1.00	1.00	1.00				
AdjDel/Veh:	47.6	47.6	0.0	0.0	19.9	19.9	48.1	0.0	48.1	0.0	0.0	0.0				
LOS by Move:	E	E	*	*	C	C	E	*	E	*	*	*				
ApproachDel:	47.6				19.9		48.1			xxxxxx						
Delay Adj:	1.00				1.00		1.00			xxxxx						
ApprAdjDel:	47.6				19.9		48.1			xxxxxx						
LOS by Appr:	E				C		E			*						
AllWayAvgQ:	6.0	6.0	6.0	1.6	1.6	1.6	6.3	6.3	6.3	0.0	0.0	0.0				

Note: Queue reported is the number of cars per lane.

Church of the Woods
Existing (2007) Traffic Conditions
Saturday Peak Hour

Level Of Service Computation Report
2000 HCM 4-Way Stop Method (Base Volume Alternative)

Intersection #5 North Bay Road/State Route 189

Cycle (sec):	100	Critical Vol./Cap.(X):	0.632
Loss Time (sec):	0 (Y+R=4.0 sec)	Average Delay (sec/veh):	17.5
Optimal Cycle:	0	Level Of Service:	C

Approach:	North Bound			South Bound			East Bound			West Bound		
Movement:	L -	T -	R	L -	T -	R	L -	T -	R	L -	T -	R
Control:	Stop Sign			Stop Sign			Stop Sign			Stop Sign		
Rights:	Include			Include			Include			Include		
Min. Green:	10	10	10	10	10	10	10	10	10	10	10	10
Lanes:	0 0	0 0	0	1 0	0 0	1	1 0	1 0	0	0 0	0 1	0
Volume Module:												
Base Vol:	0	0	0	133	0	265	281	310	0	0	213	100
Growth Adj:	1.00	1.00	1.00	1.00	1.00	1.00	1.00	1.00	1.00	1.00	1.00	1.00
Initial Bse:	0	0	0	133	0	265	281	310	0	0	213	100
User Adj:	1.00	1.00	1.00	1.00	1.00	1.00	1.00	1.00	1.00	1.00	1.00	1.00
PHF Adj:	1.00	1.00	1.00	0.95	0.95	0.95	0.86	0.86	0.86	0.87	0.87	0.87
PHF Volume:	0	0	0	141	0	280	326	359	0	0	245	115
Reduct Vol:	0	0	0	0	0	0	0	0	0	0	0	0
Reduced Vol:	0	0	0	141	0	280	326	359	0	0	245	115
PCE Adj:	1.00	1.00	1.00	1.00	1.00	1.00	1.00	1.00	1.00	1.00	1.00	1.00
MLF Adj:	1.00	1.00	1.00	1.00	1.00	1.00	1.00	1.00	1.00	1.00	1.00	1.00
FinalVolume:	0	0	0	141	0	280	326	359	0	0	245	115
Saturation Flow Module:												
Adjustment:	1.00	1.00	1.00	1.00	1.00	1.00	1.00	1.00	1.00	1.00	1.00	1.00
Lanes:	0.00	0.00	0.00	1.00	0.00	1.00	1.00	1.00	0.00	0.00	0.68	0.32
Final Sat.:	0	0	0	473	0	561	527	568	0	0	394	185
Capacity Analysis Module:												
Vol/Sat:	xxxx	xxxx	xxxx	0.30	xxxx	0.50	0.62	0.63	xxxx	xxxx	0.62	0.62
Crit Moves:						****		****			****	
Delay/Veh:	0.0	0.0	0.0	13.1	0.0	14.6	19.5	18.8	0.0	0.0	18.3	18.3
Delay Adj:	1.00	1.00	1.00	1.00	1.00	1.00	1.00	1.00	1.00	1.00	1.00	1.00
AdjDel/Veh:	0.0	0.0	0.0	13.1	0.0	14.6	19.5	18.8	0.0	0.0	18.3	18.3
LOS by Move:	*	*	*	B	*	B	C	C	*	*	C	C
ApproachDel:	xxxxxx			14.1			19.2			18.3		
Delay Adj:	xxxxx			1.00			1.00			1.00		
ApprAdjDel:	xxxxxx			14.1			19.2			18.3		
LOS by Appr:	*			B			C			C		
AllWayAvgQ:	0.0	0.0	0.0	0.4	0.0	0.9	1.5	1.6	0.0	1.5	1.5	1.5

Note: Queue reported is the number of cars per lane.

Church of the Woods
Existing (2007) Traffic Conditions
Saturday Peak Hour

Level Of Service Computation Report
2000 HCM Unsignalized Method (Base Volume Alternative)

Intersection #6 Lake Gregory Road/State Route 189

Average Delay (sec/veh): 4.7 Worst Case Level Of Service: C[18.8]

Approach:	North Bound					South Bound					East Bound					West Bound				
Movement:	L	-	T	-	R	L	-	T	-	R	L	-	T	-	R	L	-	T	-	R
Control:	Uncontrolled					Uncontrolled					Stop Sign					Stop Sign				
Rights:	Include					Include					Include					Include				
Lanes:	0	0	0	1	0	0	1	0	0	0	0	0	0	0	0	0	0	1!	0	0
Volume Module:																				
Base Vol:	0	196		66		100	268		0		0		0		0	71		0		82
Growth Adj:	1.00	1.00		1.00		1.00	1.00		1.00		1.00		1.00		1.00	1.00		1.00		1.00
Initial Bse:	0	196		66		100	268		0		0		0		0	71		0		82
User Adj:	1.00	1.00		1.00		1.00	1.00		1.00		1.00		1.00		1.00	1.00		1.00		1.00
PHF Adj:	0.86	0.86		0.86		0.78	0.78		0.78		1.00		1.00		1.00	0.82		0.82		0.82
PHF Volume:	0	229		77		128	343		0		0		0		0	87		0		100
Reduct Vol:	0	0		0		0	0		0		0		0		0	0		0		0
FinalVolume:	0	229		77		128	343		0		0		0		0	87		0		100
Critical Gap Module:																				
Critical Gp:	xxxxx	xxxx		xxxxx		4.1	xxxx		xxxxx		xxxxx		xxxx		xxxxx	6.4		6.5		6.2
FollowUpTim:	xxxxx	xxxx		xxxxx		2.2	xxxx		xxxxx		xxxxx		xxxx		xxxxx	3.5		4.0		3.3
Capacity Module:																				
Cnflict Vol:	xxxx	xxxx		xxxxx		306	xxxx		xxxxx		xxxx		xxxx		xxxxx	866		866		267
Potent Cap.:	xxxx	xxxx		xxxxx		1267	xxxx		xxxxx		xxxx		xxxx		xxxxx	326		294		776
Move Cap.:	xxxx	xxxx		xxxxx		1267	xxxx		xxxxx		xxxx		xxxx		xxxxx	299		262		776
Volume/Cap:	xxxx	xxxx		xxxx		0.10	xxxx		xxxx		xxxx		xxxx		xxxx	0.29		0.00		0.13
Level Of Service Module:																				
2Way95thQ:	xxxx	xxxx		xxxxx		0.3	xxxx		xxxxx		xxxx		xxxx		xxxxx	xxxx		xxxx		xxxxx
Control Del:	xxxxx	xxxx		xxxxx		8.2	xxxx		xxxxx		xxxxx		xxxx		xxxxx	xxxxx		xxxx		xxxxx
LOS by Move:	*	*		*		A	*		*		*		*		*	*		*		*
Movement:	LT	-	LTR	-	RT	LT	-	LTR	-	RT	LT	-	LTR	-	RT	LT	-	LTR	-	RT
Shared Cap.:	xxxx	xxxx		xxxxx		xxxx	xxxx		xxxxx		xxxx		xxxx		xxxxx	xxxx		446		xxxxx
SharedQueue:	xxxxx	xxxx		xxxxx		0.3	xxxx		xxxxx		xxxxx		xxxx		xxxxx	xxxxx		2.0		xxxxx
Shrd ConDel:	xxxxx	xxxx		xxxxx		8.2	xxxx		xxxxx		xxxxx		xxxx		xxxxx	xxxxx		18.8		xxxxx
Shared LOS:	*	*		*		A	*		*		*		*		*	*		C		*
ApproachDel:	xxxxxx					xxxxxx					xxxxxx					18.8				
ApproachLOS:	*					*					*					C				

Note: Queue reported is the number of cars per lane.

Church of the Woods
Existing (2007) Traffic Conditions
Saturday Peak Hour

Level Of Service Computation Report
2000 HCM Unsignalized Method (Base Volume Alternative)

Intersection #7 Lake Gregory Drive/State Route 18

Average Delay (sec/veh): 7.4 Worst Case Level Of Service: D[29.8]

Approach:	North Bound			South Bound			East Bound			West Bound		
Movement:	L	T	R	L	T	R	L	T	R	L	T	R
Control:	Stop Sign			Stop Sign			Uncontrolled			Uncontrolled		
Rights:	Include			Include			Include			Include		
Lanes:	0 0 0 0 0			1 0 0 0 1			1 0 1 0 0			0 0 1 0 1		
Volume Module:												
Base Vol:	0	0	0	250	0	90	113	410	0	0	367	149
Growth Adj:	1.00	1.00	1.00	1.00	1.00	1.00	1.00	1.00	1.00	1.00	1.00	1.00
Initial Bse:	0	0	0	250	0	90	113	410	0	0	367	149
User Adj:	1.00	1.00	1.00	1.00	1.00	1.00	1.00	1.00	1.00	1.00	1.00	1.00
PHF Adj:	1.00	1.00	1.00	0.97	0.97	0.97	0.85	0.85	0.85	0.85	0.85	0.85
PHF Volume:	0	0	0	257	0	92	133	483	0	0	430	174
Reduct Vol:	0	0	0	0	0	0	0	0	0	0	0	0
FinalVolume:	0	0	0	257	0	92	133	483	0	0	430	174
Critical Gap Module:												
Critical Gp:	xxxxx	xxxx	xxxxx	6.4	xxxx	6.2	4.1	xxxx	xxxxx	xxxxx	xxxx	xxxxx
FollowUpTim:	xxxxx	xxxx	xxxxx	3.5	xxxx	3.3	2.2	xxxx	xxxxx	xxxxx	xxxx	xxxxx
Capacity Module:												
Cnflict Vol:	xxxx	xxxx	xxxxx	1180	xxxx	430	604	xxxx	xxxxx	xxxx	xxxx	xxxxx
Potent Cap.:	xxxx	xxxx	xxxxx	212	xxxx	630	983	xxxx	xxxxx	xxxx	xxxx	xxxxx
Move Cap.:	xxxx	xxxx	xxxxx	190	xxxx	630	983	xxxx	xxxxx	xxxx	xxxx	xxxxx
Total Cap:	239	270	xxxxx	360	321	xxxxx	xxxx	xxxx	xxxxx	xxxx	xxxx	xxxxx
Volume/Cap:	xxxx	xxxx	xxxx	0.71	xxxx	0.15	0.14	xxxx	xxxx	xxxx	xxxx	xxxx
Level Of Service Module:												
2Way95thQ:	xxxx	xxxx	xxxxx	5.3	xxxx	0.5	0.5	xxxx	xxxxx	xxxx	xxxx	xxxxx
Control Del:	xxxxx	xxxx	xxxxx	36.3	xxxx	11.7	9.2	xxxx	xxxxx	xxxxx	xxxx	xxxxx
LOS by Move:	*	*	*	E	*	B	A	*	*	*	*	*
Movement:	LT	LTR	RT	LT	LTR	RT	LT	LTR	RT	LT	LTR	RT
Shared Cap.:	xxxx	xxxx	xxxxx	xxxx	xxxx	xxxxx	xxxx	xxxx	xxxxx	xxxx	xxxx	xxxxx
SharedQueue:	xxxxx	xxxx	xxxxx	xxxxx	xxxx	xxxxx	xxxxx	xxxx	xxxxx	xxxxx	xxxx	xxxxx
Shrd ConDel:	xxxxx	xxxx	xxxxx	xxxxx	xxxx	xxxxx	xxxxx	xxxx	xxxxx	xxxxx	xxxx	xxxxx
Shared LOS:	*	*	*	*	*	*	*	*	*	*	*	*
ApproachDel:	xxxxxx			29.8			xxxxxx			xxxxxx		
ApproachLOS:	*			D			*			*		

Note: Queue reported is the number of cars per lane.

Church of the Woods
Existing (2007) Traffic Conditions
Saturday Peak Hour

Level Of Service Computation Report
2000 HCM Unsignalized Method (Base Volume Alternative)

Intersection #8 Bear Springs Road/State Route 18

Average Delay (sec/veh): 1.7 Worst Case Level Of Service: C[24.7]

Approach:	North Bound						South Bound						East Bound						West Bound					
Movement:	L	-	T	-	R		L	-	T	-	R		L	-	T	-	R		L	-	T	-	R	
Control:	Stop Sign						Stop Sign						Uncontrolled						Uncontrolled					
Rights:	Include						Include						Include						Include					
Lanes:	0	0	1!	0	0		0	0	1!	0	0		1	0	0	1	0		1	0	0	1	0	
Volume Module:																								
Base Vol:	1	0	4				41	0	30				46	715	1				9	606	25			
Growth Adj:	1.00	1.00	1.00				1.00	1.00	1.00				1.00	1.00	1.00				1.00	1.00	1.00			
Initial Bse:	1	0	4				41	0	30				46	715	1				9	606	25			
User Adj:	1.00	1.00	1.00				1.00	1.00	1.00				1.00	1.00	1.00				1.00	1.00	1.00			
PHF Adj:	0.50	0.50	0.50				0.84	0.84	0.84				0.92	0.92	0.92				0.94	0.94	0.94			
PHF Volume:	2	0	8				49	0	36				50	779	1				10	648	27			
Reduct Vol:	0	0	0				0	0	0				0	0	0				0	0	0			
FinalVolume:	2	0	8				49	0	36				50	779	1				10	648	27			
Critical Gap Module:																								
Critical Gp:	7.1	6.5	6.2				7.1	6.5	6.2				4.1	xxxx	xxxxx				4.1	xxxx	xxxxx			
FollowUpTim:	3.5	4.0	3.3				3.5	4.0	3.3				2.2	xxxx	xxxxx				2.2	xxxx	xxxxx			
Capacity Module:																								
Cnflict Vol:	1578	1574	779				1564	1561	661				675	xxxx	xxxxx				780	xxxx	xxxxx			
Potent Cap.:	89	111	399				92	113	466				926	xxxx	xxxxx				846	xxxx	xxxxx			
Move Cap.:	79	104	399				85	106	466				926	xxxx	xxxxx				846	xxxx	xxxxx			
Total Cap:	189	215	xxxxx				203	223	xxxxx				xxxx	xxxx	xxxxx				xxxx	xxxx	xxxxx			
Volume/Cap:	0.01	0.00	0.02				0.24	0.00	0.08				0.05	xxxx	xxxx				0.01	xxxx	xxxx			
Level Of Service Module:																								
2Way95thQ:	xxxx	xxxx	xxxxx				xxxx	xxxx	xxxxx				0.2	xxxx	xxxxx				0.0	xxxx	xxxxx			
Control Del:	xxxxx	xxxx	xxxxx				xxxxx	xxxx	xxxxx				9.1	xxxx	xxxxx				9.3	xxxx	xxxxx			
LOS by Move:	*	*	*				*	*	*				A	*	*				A	*	*			
Movement:	LT	-	LTR	-	RT		LT	-	LTR	-	RT		LT	-	LTR	-	RT		LT	-	LTR	-	RT	
Shared Cap.:	xxxx	326	xxxxx				xxxx	266	xxxxx				xxxx	xxxx	xxxxx				xxxx	xxxx	xxxxx			
SharedQueue:	xxxxx	0.1	xxxxx				xxxxx	1.3	xxxxx				xxxxx	xxxx	xxxxx				xxxxx	xxxx	xxxxx			
Shrd ConDel:	xxxxx	16.4	xxxxx				xxxxx	24.7	xxxxx				xxxxx	xxxx	xxxxx				xxxxx	xxxx	xxxxx			
Shared LOS:	*	C	*				*	C	*				*	*	*				*	*	*			
ApproachDel:	16.4						24.7						xxxxxx						xxxxxx					
ApproachLOS:	C						C						*						*					

Note: Queue reported is the number of cars per lane.

Church of the Woods
Existing (2007) Traffic Conditions
Saturday Peak Hour

Level Of Service Computation Report
2000 HCM Unsignalized Method (Base Volume Alternative)

Intersection #10 Daley Canyon Road/State Route 18

Average Delay (sec/veh): 4.9 Worst Case Level Of Service: B[14.4]

Approach:	North Bound					South Bound					East Bound					West Bound				
Movement:	L	-	T	-	R	L	-	T	-	R	L	-	T	-	R	L	-	T	-	R
Control:	Stop Sign					Stop Sign					Uncontrolled					Uncontrolled				
Rights:	Include					Include					Include					Include				
Lanes:	0	0	0	0	0	0	0	0	0	1	1	0	1	0	0	0	0	1	0	0
Volume Module:																				
Base Vol:	0	0	0	0	0	281	304	467	0	0	331	0								
Growth Adj:	1.00	1.00	1.00	1.00	1.00	1.00	1.00	1.00	1.00	1.00	1.00	1.00								
Initial Bse:	0	0	0	0	0	281	304	467	0	0	331	0								
User Adj:	1.00	1.00	1.00	1.00	1.00	1.00	1.00	1.00	1.00	1.00	1.00	1.00								
PHF Adj:	1.00	1.00	1.00	1.00	1.00	0.93	0.94	0.91	1.00	1.00	0.90	1.00								
PHF Volume:	0	0	0	0	0	304	323	513	0	0	367	0								
Reduct Vol:	0	0	0	0	0	0	0	0	0	0	0	0								
FinalVolume:	0	0	0	0	0	304	323	513	0	0	367	0								
Critical Gap Module:																				
Critical Gp:	xxxxx	xxxx	xxxxx	xxxxx	xxxx	6.2	4.1	xxxx	xxxxx	xxxxx	xxxx	xxxxx								
FollowUpTim:	xxxxx	xxxx	xxxxx	xxxxx	xxxx	3.3	2.2	xxxx	xxxxx	xxxxx	xxxx	xxxxx								
Capacity Module:																				
Cnflict Vol:	xxxx	xxxx	xxxxx	xxxx	xxxx	367	367	xxxx	xxxxx	xxxx	xxxx	xxxxx								
Potent Cap.:	xxxx	xxxx	xxxxx	xxxx	xxxx	683	1203	xxxx	xxxxx	xxxx	xxxx	xxxxx								
Move Cap.:	xxxx	xxxx	xxxxx	xxxx	xxxx	683	1203	xxxx	xxxxx	xxxx	xxxx	xxxxx								
Volume/Cap:	xxxx	xxxx	xxxx	xxxx	xxxx	0.44	0.27	xxxx	xxxx	xxxx	xxxx	xxxx								
Level Of Service Module:																				
2Way95thQ:	xxxx	xxxx	xxxxx	xxxx	xxxx	2.3	1.1	xxxx	xxxxx	xxxx	xxxx	xxxxx								
Control Del:	xxxxx	xxxx	xxxxx	xxxxx	xxxx	14.4	9.1	xxxx	xxxxx	xxxxx	xxxx	xxxxx								
LOS by Move:	*	*	*	*	*	B	A	*	*	*	*	*								
Movement:	LT	-	LTR	-	RT	LT	-	LTR	-	RT	LT	-	LTR	-	RT	LT	-	LTR	-	RT
Shared Cap.:	xxxx	xxxx	xxxxx	xxxx	xxxx	xxxxx	xxxx	xxxx	xxxxx	xxxx	xxxx	xxxxx								
SharedQueue:	xxxxx	xxxx	xxxxx	xxxxx	xxxx	xxxxx	xxxxx	xxxx	xxxxx	xxxxx	xxxx	xxxxx								
Shrd ConDel:	xxxxx	xxxx	xxxxx	xxxxx	xxxx	xxxxx	xxxxx	xxxx	xxxxx	xxxxx	xxxx	xxxxx								
Shared LOS:	*	*	*	*	*	*	*	*	*	*	*	*								
ApproachDel:	xxxxxx					14.4	xxxxxx				xxxxxx									
ApproachLOS:	*					B	*				*									

Note: Queue reported is the number of cars per lane.

Church of the Woods
Existing (2007) Traffic Conditions
Saturday Peak Hour

Level Of Service Computation Report
2000 HCM Unsignalized Method (Base Volume Alternative)

Intersection #11 Daley Canyon Road/Daley Canyon Access Road

Average Delay (sec/veh): 3.7 Worst Case Level Of Service: B[11.5]

Approach:	North Bound			South Bound			East Bound			West Bound		
Movement:	L	T	R	L	T	R	L	T	R	L	T	R
Control:	Uncontrolled			Uncontrolled			Stop Sign			Stop Sign		
Rights:	Include			Include			Include			Include		
Lanes:	0 0 1	0	0	0 1	0 0	0	0 0 0	0	0	0 0 0	0	1
Volume Module:												
Base Vol:	0	304	0	153	281	0	0	0	0	0	0	153
Growth Adj:	1.00	1.00	1.00	1.00	1.00	1.00	1.00	1.00	1.00	1.00	1.00	1.00
Initial Bse:	0	304	0	153	281	0	0	0	0	0	0	153
User Adj:	1.00	1.00	1.00	1.00	1.00	1.00	1.00	1.00	1.00	1.00	1.00	1.00
PHF Adj:	1.00	0.94	1.00	0.79	0.93	1.00	1.00	1.00	1.00	1.00	1.00	0.88
PHF Volume:	0	323	0	194	304	0	0	0	0	0	0	173
Reduct Vol:	0	0	0	0	0	0	0	0	0	0	0	0
FinalVolume:	0	323	0	194	304	0	0	0	0	0	0	173
Critical Gap Module:												
Critical Gp:	xxxxx	xxxx	xxxxx	4.1	xxxx	xxxxx	xxxxx	xxxx	xxxxx	xxxxx	xxxx	6.2
FollowUpTim:	xxxxx	xxxx	xxxxx	2.2	xxxx	xxxxx	xxxxx	xxxx	xxxxx	xxxxx	xxxx	3.3
Capacity Module:												
Cnflict Vol:	xxxx	xxxx	xxxxx	323	xxxx	xxxxx	xxxx	xxxx	xxxxx	xxxx	xxxx	323
Potent Cap.:	xxxx	xxxx	xxxxx	1248	xxxx	xxxxx	xxxx	xxxx	xxxxx	xxxx	xxxx	723
Move Cap.:	xxxx	xxxx	xxxxx	1248	xxxx	xxxxx	xxxx	xxxx	xxxxx	xxxx	xxxx	723
Volume/Cap:	xxxx	xxxx	xxxx	0.16	xxxx	xxxx	xxxx	xxxx	xxxx	xxxx	xxxx	0.24
Level Of Service Module:												
2Way95thQ:	xxxx	xxxx	xxxxx	0.5	xxxx	xxxxx	xxxx	xxxx	xxxxx	xxxx	xxxx	0.9
Control Del:	xxxxx	xxxx	xxxxx	8.4	xxxx	xxxxx	xxxxx	xxxx	xxxxx	xxxxx	xxxx	11.5
LOS by Move:	*	*	*	A	*	*	*	*	*	*	*	B
Movement:	LT	LTR	RT	LT	LTR	RT	LT	LTR	RT	LT	LTR	RT
Shared Cap.:	xxxx	xxxx	xxxxx	xxxx	xxxx	xxxxx	xxxx	xxxx	xxxxx	xxxx	xxxx	xxxxx
SharedQueue:	xxxxx	xxxx	xxxxx	0.5	xxxx	xxxxx	xxxxx	xxxx	xxxxx	xxxxx	xxxx	xxxxx
Shrd ConDel:	xxxxx	xxxx	xxxxx	8.4	xxxx	xxxxx	xxxxx	xxxx	xxxxx	xxxxx	xxxx	xxxxx
Shared LOS:	*	*	*	A	*	*	*	*	*	*	*	*
ApproachDel:	xxxxxx			xxxxxx			xxxxxx			11.5		
ApproachLOS:	*			*			*			B		

Note: Queue reported is the number of cars per lane.

Church of the Woods
Existing (2007) Traffic Conditions
Saturday Peak Hour

Level Of Service Computation Report
2000 HCM Unsignalized Method (Base Volume Alternative)

Intersection #12 Daley Canyon Access Road/State Route 18

Average Delay (sec/veh): 5.0 Worst Case Level Of Service: D[32.1]

Approach:	North Bound					South Bound					East Bound					West Bound				
Movement:	L	-	T	-	R	L	-	T	-	R	L	-	T	-	R	L	-	T	-	R
Control:	Stop Sign					Stop Sign					Uncontrolled					Uncontrolled				
Rights:	Include					Include					Include					Include				
Lanes:	0	0	0	0	0	1	0	0	0	0	0	0	1	0	0	0	0	1	0	1
Volume Module:																				
Base Vol:	0	0	0			153	0	0			0	467	0			0	331	153		
Growth Adj:	1.00	1.00	1.00			1.00	1.00	1.00			1.00	1.00	1.00			1.00	1.00	1.00		
Initial Bse:	0	0	0			153	0	0			0	467	0			0	331	153		
User Adj:	1.00	1.00	1.00			1.00	1.00	1.00			1.00	1.00	1.00			1.00	1.00	1.00		
PHF Adj:	1.00	1.00	1.00			0.79	1.00	1.00			1.00	0.91	1.00			1.00	0.90	0.88		
PHF Volume:	0	0	0			194	0	0			0	513	0			0	367	173		
Reduct Vol:	0	0	0			0	0	0			0	0	0			0	0	0		
FinalVolume:	0	0	0			194	0	0			0	513	0			0	367	173		
Critical Gap Module:																				
Critical Gp:	xxxxx	xxxx	xxxxx			6.4	xxxx	xxxxx			xxxxx	xxxx	xxxxx			xxxxx	xxxx	xxxxx		
FollowUpTim:	xxxxx	xxxx	xxxxx			3.5	xxxx	xxxxx			xxxxx	xxxx	xxxxx			xxxxx	xxxx	xxxxx		
Capacity Module:																				
Cnflict Vol:	xxxx	xxxx	xxxxx			880	xxxx	xxxxx			xxxx	xxxx	xxxxx			xxxx	xxxx	xxxxx		
Potent Cap.:	xxxx	xxxx	xxxxx			320	xxxx	xxxxx			xxxx	xxxx	xxxxx			xxxx	xxxx	xxxxx		
Move Cap.:	xxxx	xxxx	xxxxx			320	xxxx	xxxxx			xxxx	xxxx	xxxxx			xxxx	xxxx	xxxxx		
Volume/Cap:	xxxx	xxxx	xxxx			0.61	xxxx	xxxx			xxxx	xxxx	xxxx			xxxx	xxxx	xxxx		
Level Of Service Module:																				
2Way95thQ:	xxxx	xxxx	xxxxx			3.7	xxxx	xxxxx			xxxx	xxxx	xxxxx			xxxx	xxxx	xxxxx		
Control Del:	xxxxx	xxxx	xxxxx			32.1	xxxx	xxxxx			xxxxx	xxxx	xxxxx			xxxxx	xxxx	xxxxx		
LOS by Move:	*	*	*			D	*	*			*	*	*			*	*	*		
Movement:	LT	-	LTR	-	RT	LT	-	LTR	-	RT	LT	-	LTR	-	RT	LT	-	LTR	-	RT
Shared Cap.:	xxxx	xxxx	xxxxx			xxxx	xxxx	xxxxx			xxxx	xxxx	xxxxx			xxxx	xxxx	xxxxx		
SharedQueue:	xxxxx	xxxx	xxxxx			xxxxx	xxxx	xxxxx			xxxxx	xxxx	xxxxx			xxxxx	xxxx	xxxxx		
Shrd ConDel:	xxxxx	xxxx	xxxxx			xxxxx	xxxx	xxxxx			xxxxx	xxxx	xxxxx			xxxxx	xxxx	xxxxx		
Shared LOS:	*	*	*			*	*	*			*	*	*			*	*	*		
ApproachDel:	xxxxxx					32.1					xxxxxx					xxxxxx				
ApproachLOS:	*					D					*					*				

Note: Queue reported is the number of cars per lane.

Church of the Woods
Existing (2007) Traffic Conditions
Saturday Peak Hour

Level Of Service Computation Report
2000 HCM Unsignalized Method (Base Volume Alternative)

Intersection #13 State Route 173/State Route 18

Average Delay (sec/veh): 17.3 Worst Case Level Of Service: F[68.9]

Approach:	North Bound						South Bound						East Bound						West Bound					
Movement:	L	-	T	-	R		L	-	T	-	R		L	-	T	-	R		L	-	T	-	R	
Control:	Stop Sign						Stop Sign						Uncontrolled						Uncontrolled					
Rights:	Include						Include						Include						Include					
Lanes:	0	0	0	0	0		0	0	1!	0	0		1	0	1	0	0		0	0	1	0	1	
Volume Module:																								
Base Vol:	0	0	0				85	0			143		247		292	0			0		253		90	
Growth Adj:	1.00	1.00	1.00				1.00	1.00			1.00		1.00		1.00	1.00			1.00		1.00		1.00	
Initial Bse:	0	0	0				85	0			143		247		292	0			0		253		90	
User Adj:	1.00	1.00	1.00				1.00	1.00			1.00		1.00		1.00	1.00			1.00		1.00		1.00	
PHF Adj:	1.00	1.00	1.00				0.79	0.79			0.79		0.82		0.82	0.82			0.94		0.94		0.94	
PHF Volume:	0	0	0				108	0			182		303		358	0			0		270		96	
Reduct Vol:	0	0	0				0	0			0		0		0	0			0		0		0	
FinalVolume:	0	0	0				108	0			182		303		358	0			0		270		96	
Critical Gap Module:																								
Critical Gp:	xxxxx	xxxx	xxxxx				6.4		6.5		6.2		4.1	xxxx	xxxxx	xxxxx			xxxx		xxxxx			
FollowUpTim:	xxxxx	xxxx	xxxxx				3.5		4.0		3.3		2.2	xxxx	xxxxx	xxxxx			xxxx		xxxxx			
Capacity Module:																								
Cnflict Vol:	xxxx	xxxx	xxxxx				1234		1234		270		366	xxxx	xxxxx				xxxx		xxxx		xxxxx	
Potent Cap.:	xxxx	xxxx	xxxxx				197		178		774		1204	xxxx	xxxxx				xxxx		xxxx		xxxxx	
Move Cap.:	xxxx	xxxx	xxxxx				159		133		774		1204	xxxx	xxxxx				xxxx		xxxx		xxxxx	
Volume/Cap:	xxxx	xxxx	xxxx				0.68		0.00		0.24		0.25	xxxx	xxxx				xxxx		xxxx		xxxx	
Level Of Service Module:																								
2Way95thQ:	xxxx	xxxx	xxxxx				xxxx		xxxx		xxxxx		1.0	xxxx	xxxxx				xxxx		xxxx		xxxxx	
Control Del:	xxxxx	xxxx	xxxxx				xxxxx		xxxx		xxxxx		9.0	xxxx	xxxxx				xxxxx		xxxx		xxxxx	
LOS by Move:	*	*	*				*		*		*		A	*	*				*		*		*	
Movement:	LT	-	LTR	-	RT		LT	-	LTR	-	RT		LT	-	LTR	-	RT		LT	-	LTR	-	RT	
Shared Cap.:	xxxx	xxxx	xxxxx				xxxx		316		xxxxx		xxxx	xxxx	xxxxx				xxxx		xxxx		xxxxx	
SharedQueue:	xxxxx	xxxx	xxxxx				xxxxx		8.9		xxxxx		xxxxx	xxxx	xxxxx				xxxxx		xxxx		xxxxx	
Shrd ConDel:	xxxxx	xxxx	xxxxx				xxxxx		68.9		xxxxx		xxxxx	xxxx	xxxxx				xxxxx		xxxx		xxxxx	
Shared LOS:	*	*	*				*		F		*		*	*	*				*		*		*	
ApproachDel:	xxxxxx						68.9						xxxxxx						xxxxxx					
ApproachLOS:	*						F						*						*					

Note: Queue reported is the number of cars per lane.

```
------------------------------------------------------------------------------
                              Church of the Woods
                       Existing (2007) Traffic Conditions
                                Sunday Peak Hour
------------------------------------------------------------------------------
                       Level Of Service Computation Report
             2000 HCM Unsignalized Method (Base Volume Alternative)
******************************************************************************
Intersection #1 North Road/State Route 189
******************************************************************************
Average Delay (sec/veh):      4.4       Worst Case Level Of Service: B[ 12.3]
******************************************************************************
Approach:      North Bound      South Bound       East Bound       West Bound
Movement:     L  -  T  -  R    L  -  T  -  R    L  -  T  -  R    L  -  T  -  R
------------|---------------||---------------||---------------||---------------|
Control:        Stop Sign        Stop Sign       Uncontrolled     Uncontrolled
Rights:           Include          Include          Include          Include
Lanes:        0  0  0  0  0    0  0  1! 0  0    0  1  0  0  0    0  0  0  1  0
------------|---------------||---------------||---------------||---------------|
Volume Module:
Base Vol:       0    0     0    87    0    50    35   79     0     0  145    75
Growth Adj:  1.00 1.00  1.00  1.00 1.00  1.00  1.00 1.00  1.00  1.00 1.00  1.00
Initial Bse:    0    0     0    87    0    50    35   79     0     0  145    75
User Adj:    1.00 1.00  1.00  1.00 1.00  1.00  1.00 1.00  1.00  1.00 1.00  1.00
PHF Adj:     1.00 1.00  1.00  0.77 0.77  0.77  0.86 0.86  0.86  0.85 0.85  0.85
PHF Volume:     0    0     0   113    0    65    41   92     0     0  170    88
Reduct Vol:     0    0     0     0    0     0     0    0     0     0    0     0
FinalVolume:    0    0     0   113    0    65    41   92     0     0  170    88
------------|---------------||---------------||---------------||---------------|
Critical Gap Module:
Critical Gp:xxxxx xxxx xxxxx   6.4  6.5   6.2   4.1 xxxx xxxxx xxxxx xxxx xxxxx
FollowUpTim:xxxxx xxxx xxxxx   3.5  4.0   3.3   2.2 xxxx xxxxx xxxxx xxxx xxxxx
------------|---------------||---------------||---------------||---------------|
Capacity Module:
Cnflict Vol: xxxx xxxx xxxxx   387  387   214   258 xxxx xxxxx  xxxx xxxx xxxxx
Potent Cap.: xxxx xxxx xxxxx   620  551   831  1319 xxxx xxxxx  xxxx xxxx xxxxx
Move Cap.:   xxxx xxxx xxxxx   605  533   831  1319 xxxx xxxxx  xxxx xxxx xxxxx
Volume/Cap:  xxxx xxxx  xxxx  0.19 0.00  0.08  0.03 xxxx  xxxx  xxxx xxxx  xxxx
------------|---------------||---------------||---------------||---------------|
Level Of Service Module:
2Way95thQ:   xxxx xxxx xxxxx  xxxx xxxx xxxxx   0.1 xxxx xxxxx  xxxx xxxx xxxxx
Control Del:xxxxx xxxx xxxxx xxxxx xxxx xxxxx   7.8 xxxx xxxxx xxxxx xxxx xxxxx
LOS by Move:   *    *     *     *    *     *     A    *     *     *    *     *
Movement:     LT - LTR - RT    LT - LTR - RT    LT - LTR - RT    LT - LTR - RT
Shared Cap.: xxxx xxxx xxxxx  xxxx  672 xxxxx  xxxx xxxx xxxxx  xxxx xxxx xxxxx
SharedQueue:xxxxx xxxx xxxxx xxxxx  1.1 xxxxx   0.1 xxxx xxxxx xxxxx xxxx xxxxx
Shrd ConDel:xxxxx xxxx xxxxx xxxxx 12.3 xxxxx   7.8 xxxx xxxxx xxxxx xxxx xxxxx
Shared LOS:    *    *     *     *    B     *     A    *     *     *    *     *
ApproachDel:    xxxxxx             12.3           xxxxxx           xxxxxx
ApproachLOS:        *               B                *                *
******************************************************************************
Note: Queue reported is the number of cars per lane.
******************************************************************************
```

Church of the Woods
Existing (2007) Traffic Conditions
Sunday Peak Hour

Level Of Service Computation Report
2000 HCM Unsignalized Method (Base Volume Alternative)

Intersection #2 Bear Springs Road/State Route 189

Average Delay (sec/veh): 4.1 Worst Case Level Of Service: B[12.9]

Approach:	North Bound			South Bound			East Bound			West Bound		
Movement:	L - T - R			L - T - R			L - T - R			L - T - R		
Control:	Stop Sign			Stop Sign			Uncontrolled			Uncontrolled		
Rights:	Include			Include			Include			Include		
Lanes:	0 0 1! 0 0			0 0 1! 0 0			0 0 1! 0 0			0 0 1! 0 0		
Volume Module:												
Base Vol:	11	13	9	33	10	56	40	142	20	11	176	18
Growth Adj:	1.00	1.00	1.00	1.00	1.00	1.00	1.00	1.00	1.00	1.00	1.00	1.00
Initial Bse:	11	13	9	33	10	56	40	142	20	11	176	18
User Adj:	1.00	1.00	1.00	1.00	1.00	1.00	1.00	1.00	1.00	1.00	1.00	1.00
PHF Adj:	0.81	0.81	0.81	0.79	0.79	0.79	0.83	0.83	0.83	0.96	0.96	0.96
PHF Volume:	14	16	11	42	13	71	48	170	24	11	183	19
Reduct Vol:	0	0	0	0	0	0	0	0	0	0	0	0
FinalVolume:	14	16	11	42	13	71	48	170	24	11	183	19
Critical Gap Module:												
Critical Gp:	7.1	6.5	6.2	7.1	6.5	6.2	4.1	xxxx	xxxxx	4.1	xxxx	xxxxx
FollowUpTim:	3.5	4.0	3.3	3.5	4.0	3.3	2.2	xxxx	xxxxx	2.2	xxxx	xxxxx
Capacity Module:												
Cnflict Vol:	535	503	182	507	505	192	201	xxxx	xxxxx	194	xxxx	xxxxx
Potent Cap.:	459	474	865	479	472	855	1383	xxxx	xxxxx	1391	xxxx	xxxxx
Move Cap.:	398	453	865	445	452	855	1383	xxxx	xxxxx	1391	xxxx	xxxxx
Volume/Cap:	0.03	0.04	0.01	0.09	0.03	0.08	0.03	xxxx	xxxx	0.01	xxxx	xxxx
Level Of Service Module:												
2Way95thQ:	xxxx	xxxx	xxxxx	xxxx	xxxx	xxxxx	0.1	xxxx	xxxxx	0.0	xxxx	xxxxx
Control Del:	xxxxx	xxxx	xxxxx	xxxxx	xxxx	xxxxx	7.7	xxxx	xxxxx	7.6	xxxx	xxxxx
LOS by Move:	*	*	*	*	*	*	A	*	*	A	*	*
Movement:	LT - LTR - RT			LT - LTR - RT			LT - LTR - RT			LT - LTR - RT		
Shared Cap.:	xxxx	495	xxxxx	xxxx	612	xxxxx	xxxx	xxxx	xxxxx	xxxx	xxxx	xxxxx
SharedQueue:	xxxxx	0.3	xxxxx	xxxxx	0.8	xxxxx	xxxxx	xxxx	xxxxx	xxxxx	xxxx	xxxxx
Shrd ConDel:	xxxxx	12.9	xxxxx	xxxxx	12.4	xxxxx	xxxxx	xxxx	xxxxx	xxxxx	xxxx	xxxxx
Shared LOS:	*	B	*	*	B	*	*	*	*	*	*	*
ApproachDel:	12.9			12.4			xxxxxx			xxxxxx		
ApproachLOS:	B			B			*			*		

Note: Queue reported is the number of cars per lane.

Church of the Woods
Existing (2007) Traffic Conditions
Sunday Peak Hour

Level Of Service Computation Report
2000 HCM Unsignalized Method (Base Volume Alternative)

Intersection #3 Grass Valley Road/State Route 189

Average Delay (sec/veh): 9.5 Worst Case Level Of Service: C[17.3]

Approach:	North Bound					South Bound					East Bound					West Bound				
Movement:	L	-	T	-	R	L	-	T	-	R	L	-	T	-	R	L	-	T	-	R
Control:	Stop Sign					Stop Sign					Uncontrolled					Uncontrolled				
Rights:	Include					Include					Include					Include				
Lanes:	0	0	0	0	0	0	0	1!	0	0	1	0	1	0	0	0	0	0	1	0
Volume Module:																				
Base Vol:	0	0	0			228	0		157		64	156		0		0	53		84	
Growth Adj:	1.00	1.00	1.00			1.00	1.00		1.00		1.00	1.00		1.00		1.00	1.00		1.00	
Initial Bse:	0	0	0			228	0		157		64	156		0		0	53		84	
User Adj:	1.00	1.00	1.00			1.00	1.00		1.00		1.00	1.00		1.00		1.00	1.00		1.00	
PHF Adj:	1.00	1.00	1.00			0.90	0.90		0.90		0.91	0.91		0.91		0.83	0.83		0.83	
PHF Volume:	0	0	0			253	0		174		70	171		0		0	64		102	
Reduct Vol:	0	0	0			0	0		0		0	0		0		0	0		0	
FinalVolume:	0	0	0			253	0		174		70	171		0		0	64		102	
Critical Gap Module:																				
Critical Gp:	xxxxx	xxxx	xxxxx			6.4	6.5		6.2		4.1	xxxx	xxxxx	xxxxx		xxxx	xxxxx			
FollowUpTim:	xxxxx	xxxx	xxxxx			3.5	4.0		3.3		2.2	xxxx	xxxxx	xxxxx		xxxx	xxxxx			
Capacity Module:																				
Cnflict Vol:	xxxx	xxxx	xxxxx			427	427		115		166	xxxx	xxxxx	xxxx		xxxx	xxxxx			
Potent Cap.:	xxxx	xxxx	xxxxx			588	523		943		1425	xxxx	xxxxx	xxxx		xxxx	xxxxx			
Move Cap.:	xxxx	xxxx	xxxxx			566	497		943		1425	xxxx	xxxxx	xxxx		xxxx	xxxxx			
Total Cap:	453	512	xxxxx			610	538		xxxxx		xxxx	xxxx	xxxxx	xxxx		xxxx	xxxxx			
Volume/Cap:	xxxx	xxxx	xxxx			0.42	0.00		0.19		0.05	xxxx	xxxx	xxxx		xxxx	xxxx			
Level Of Service Module:																				
2Way95thQ:	xxxx	xxxx	xxxxx			xxxx	xxxx		xxxxx		0.2	xxxx	xxxxx	xxxx		xxxx	xxxxx			
Control Del:	xxxxx	xxxx	xxxxx			xxxxx	xxxx		xxxxx		7.7	xxxx	xxxxx	xxxxx		xxxx	xxxxx			
LOS by Move:	*	*	*			*	*		*		A	*	*	*		*	*			
Movement:	LT	-	LTR	-	RT	LT	-	LTR	-	RT	LT	-	LTR	-	RT	LT	-	LTR	-	RT
Shared Cap.:	xxxx	xxxx	xxxxx			xxxx	712		xxxxx		xxxx	xxxx	xxxxx	xxxx		xxxx	xxxxx			
SharedQueue:	xxxxx	xxxx	xxxxx			xxxxx	4.0		xxxxx		xxxxx	xxxx	xxxxx	xxxxx		xxxx	xxxxx			
Shrd ConDel:	xxxxx	xxxx	xxxxx			xxxxx	17.3		xxxxx		xxxxx	xxxx	xxxxx	xxxxx		xxxx	xxxxx			
Shared LOS:	*	*	*			*	C		*		*	*		*		*	*			
ApproachDel:	xxxxxx					17.3			xxxxxx					xxxxxx						
ApproachLOS:	*					C			*					*						

Note: Queue reported is the number of cars per lane.

Church of the Woods
Existing (2007) Traffic Conditions
Sunday Peak Hour

Level Of Service Computation Report
2000 HCM 4-Way Stop Method (Base Volume Alternative)

Intersection #4 Daley Canyon Road/State Route 189

Cycle (sec):	100	Critical Vol./Cap.(X):	0.584
Loss Time (sec):	0 (Y+R=4.0 sec)	Average Delay (sec/veh):	13.7
Optimal Cycle:	0	Level Of Service:	B

Approach:	North Bound				South Bound				East Bound				West Bound			
Movement:	L	- T	- R		L	- T	- R		L	- T	- R		L	- T	- R	
Control:	Stop Sign				Stop Sign				Stop Sign				Stop Sign			
Rights:	Include				Include				Include				Include			
Min. Green:	10	10	10	10	10	10	10	10	10	10	10	10	10	10	10	10
Lanes:	0	1	0	0	0	0	0	0	1	0	0	0	1!	0	0	0
Volume Module:																
Base Vol:	88	154	0	0	263	39	183	0	186	0	0	0				
Growth Adj:	1.00	1.00	1.00	1.00	1.00	1.00	1.00	1.00	1.00	1.00	1.00	1.00				
Initial Bse:	88	154	0	0	263	39	183	0	186	0	0	0				
User Adj:	1.00	1.00	1.00	1.00	1.00	1.00	1.00	1.00	1.00	1.00	1.00	1.00				
PHF Adj:	0.86	0.86	0.86	0.87	0.87	0.87	0.96	0.96	0.96	1.00	1.00	1.00				
PHF Volume:	102	179	0	0	304	45	190	0	194	0	0	0				
Reduct Vol:	0	0	0	0	0	0	0	0	0	0	0	0				
Reduced Vol:	102	179	0	0	304	45	190	0	194	0	0	0				
PCE Adj:	1.00	1.00	1.00	1.00	1.00	1.00	1.00	1.00	1.00	1.00	1.00	1.00				
MLF Adj:	1.00	1.00	1.00	1.00	1.00	1.00	1.00	1.00	1.00	1.00	1.00	1.00				
FinalVolume:	102	179	0	0	304	45	190	0	194	0	0	0				
Saturation Flow Module:																
Adjustment:	1.00	1.00	1.00	1.00	1.00	1.00	1.00	1.00	1.00	1.00	1.00	1.00				
Lanes:	0.36	0.64	0.00	0.00	0.87	0.13	0.50	0.00	0.50	0.00	0.00	0.00				
Final Sat.:	227	398	0	0	571	85	326	0	332	0	0	0				
Capacity Analysis Module:																
Vol/Sat:	0.45	0.45	xxxx	xxxx	0.53	0.53	0.58	xxxx	0.58	xxxx	xxxx	xxxx				
Crit Moves:	****				****		****									
Delay/Veh:	12.6	12.6	0.0	0.0	13.6	13.6	14.6	0.0	14.6	0.0	0.0	0.0				
Delay Adj:	1.00	1.00	1.00	1.00	1.00	1.00	1.00	1.00	1.00	1.00	1.00	1.00				
AdjDel/Veh:	12.6	12.6	0.0	0.0	13.6	13.6	14.6	0.0	14.6	0.0	0.0	0.0				
LOS by Move:	B	B	*	*	B	B	B	*	B	*	*	*				
ApproachDel:	12.6				13.6			14.6			xxxxxx					
Delay Adj:	1.00				1.00			1.00			xxxxx					
ApprAdjDel:	12.6				13.6			14.6			xxxxxx					
LOS by Appr:	B				B			B			*					
AllWayAvgQ:	0.7	0.7	0.7	1.0	1.0	1.0	1.2	1.2	1.2	0.0	0.0	0.0				

Note: Queue reported is the number of cars per lane.

Church of the Woods
Existing (2007) Traffic Conditions
Sunday Peak Hour

Level Of Service Computation Report
2000 HCM 4-Way Stop Method (Base Volume Alternative)

Intersection #5 North Bay Road/State Route 189

Cycle (sec):	100	Critical Vol./Cap.(X):	0.485
Loss Time (sec):	0 (Y+R=4.0 sec)	Average Delay (sec/veh):	12.9
Optimal Cycle:	0	Level Of Service:	B

Approach:	North Bound			South Bound			East Bound			West Bound		
Movement:	L -	T -	R	L -	T -	R	L -	T -	R	L -	T -	R
Control:	Stop Sign			Stop Sign			Stop Sign			Stop Sign		
Rights:	Include			Include			Include			Include		
Min. Green:	10	10	10	10	10	10	10	10	10	10	10	10
Lanes:	0 0	0 0	0	1 0	0 0	1	1 0	1 0	0	0 0	0 1	0
Volume Module:												
Base Vol:	0	0	0	71	0	232	166	189	0	0	186	78
Growth Adj:	1.00	1.00	1.00	1.00	1.00	1.00	1.00	1.00	1.00	1.00	1.00	1.00
Initial Bse:	0	0	0	71	0	232	166	189	0	0	186	78
User Adj:	1.00	1.00	1.00	1.00	1.00	1.00	1.00	1.00	1.00	1.00	1.00	1.00
PHF Adj:	1.00	1.00	1.00	0.78	0.78	0.78	0.81	0.81	0.81	0.90	0.90	0.90
PHF Volume:	0	0	0	91	0	299	206	234	0	0	207	87
Reduct Vol:	0	0	0	0	0	0	0	0	0	0	0	0
Reduced Vol:	0	0	0	91	0	299	206	234	0	0	207	87
PCE Adj:	1.00	1.00	1.00	1.00	1.00	1.00	1.00	1.00	1.00	1.00	1.00	1.00
MLF Adj:	1.00	1.00	1.00	1.00	1.00	1.00	1.00	1.00	1.00	1.00	1.00	1.00
FinalVolume:	0	0	0	91	0	299	206	234	0	0	207	87
Saturation Flow Module:												
Adjustment:	1.00	1.00	1.00	1.00	1.00	1.00	1.00	1.00	1.00	1.00	1.00	1.00
Lanes:	0.00	0.00	0.00	1.00	0.00	1.00	1.00	1.00	0.00	0.00	0.70	0.30
Final Sat.:	0	0	0	511	0	617	544	588	0	0	430	180
Capacity Analysis Module:												
Vol/Sat:	xxxx	xxxx	xxxx	0.18	xxxx	0.48	0.38	0.40	xxxx	xxxx	0.48	0.48
Crit Moves:						****		****			****	
Delay/Veh:	0.0	0.0	0.0	10.9	0.0	13.1	12.9	12.4	0.0	0.0	13.7	13.7
Delay Adj:	1.00	1.00	1.00	1.00	1.00	1.00	1.00	1.00	1.00	1.00	1.00	1.00
AdjDel/Veh:	0.0	0.0	0.0	10.9	0.0	13.1	12.9	12.4	0.0	0.0	13.7	13.7
LOS by Move:	*	*	*	B	*	B	B	B	*	*	B	B
ApproachDel:	xxxxxx			12.6			12.6			13.7		
Delay Adj:	xxxxx			1.00			1.00			1.00		
ApprAdjDel:	xxxxxx			12.6			12.6			13.7		
LOS by Appr:	*			B			B			B		
AllWayAvgQ:	0.0	0.0	0.0	0.2	0.0	0.8	0.6	0.6	0.0	0.8	0.8	0.8

Note: Queue reported is the number of cars per lane.

Church of the Woods
Existing (2007) Traffic Conditions
Sunday Peak Hour

Level Of Service Computation Report
2000 HCM Unsignalized Method (Base Volume Alternative)

Intersection #6 Lake Gregory Road/State Route 189

Average Delay (sec/veh): 9.0 Worst Case Level Of Service: C[20.3]

Approach:	North Bound					South Bound					East Bound					West Bound				
Movement:	L	-	T	-	R	L	-	T	-	R	L	-	T	-	R	L	-	T	-	R
Control:	Uncontrolled					Uncontrolled					Stop Sign					Stop Sign				
Rights:	Include					Include					Include					Include				
Lanes:	0	0	0	1	0	0	1	0	0	0	0	0	0	0	0	0	0	1!	0	0
Volume Module:																				
Base Vol:	0	117		39		64	138		0		0		0		0	151		0		73
Growth Adj:	1.00	1.00		1.00		1.00	1.00		1.00		1.00		1.00		1.00	1.00		1.00		1.00
Initial Bse:	0	117		39		64	138		0		0		0		0	151		0		73
User Adj:	1.00	1.00		1.00		1.00	1.00		1.00		1.00		1.00		1.00	1.00		1.00		1.00
PHF Adj:	0.81	0.81		0.81		0.69	0.69		0.69		1.00		1.00		1.00	0.69		0.69		0.69
PHF Volume:	0	145		48		93	200		0		0		0		0	219		0		106
Reduct Vol:	0	0		0		0	0		0		0		0		0	0		0		0
FinalVolume:	0	145		48		93	200		0		0		0		0	219		0		106
Critical Gap Module:																				
Critical Gp:	xxxxx	xxxx		xxxxx		4.1	xxxx		xxxxx		xxxxx		xxxx		xxxxx	6.4		6.5		6.2
FollowUpTim:	xxxxx	xxxx		xxxxx		2.2	xxxx		xxxxx		xxxxx		xxxx		xxxxx	3.5		4.0		3.3
Capacity Module:																				
Cnflict Vol:	xxxx	xxxx		xxxxx		193	xxxx		xxxxx		xxxx		xxxx		xxxxx	554		554		169
Potent Cap.:	xxxx	xxxx		xxxxx		1393	xxxx		xxxxx		xxxx		xxxx		xxxxx	497		443		881
Move Cap.:	xxxx	xxxx		xxxxx		1393	xxxx		xxxxx		xxxx		xxxx		xxxxx	470		412		881
Volume/Cap:	xxxx	xxxx		xxxx		0.07	xxxx		xxxx		xxxx		xxxx		xxxx	0.47		0.00		0.12
Level Of Service Module:																				
2Way95thQ:	xxxx	xxxx		xxxxx		0.2	xxxx		xxxxx		xxxx		xxxx		xxxxx	xxxx		xxxx		xxxxx
Control Del:	xxxxx	xxxx		xxxxx		7.8	xxxx		xxxxx		xxxxx		xxxx		xxxxx	xxxxx		xxxx		xxxxx
LOS by Move:	*	*		*		A	*		*		*		*		*	*		*		*
Movement:	LT	-	LTR	-	RT	LT	-	LTR	-	RT	LT	-	LTR	-	RT	LT	-	LTR	-	RT
Shared Cap.:	xxxx	xxxx		xxxxx		xxxx	xxxx		xxxxx		xxxx		xxxx		xxxxx	xxxx		554		xxxxx
SharedQueue:	xxxxx	xxxx		xxxxx		0.2	xxxx		xxxxx		xxxxx		xxxx		xxxxx	xxxxx		3.8		xxxxx
Shrd ConDel:	xxxxx	xxxx		xxxxx		7.8	xxxx		xxxxx		xxxxx		xxxx		xxxxx	xxxxx		20.3		xxxxx
Shared LOS:	*	*		*		A	*		*		*		*		*	*		C		*
ApproachDel:	xxxxxx					xxxxxx					xxxxxx					20.3				
ApproachLOS:	*					*					*					C				

Note: Queue reported is the number of cars per lane.

Church of the Woods
Existing (2007) Traffic Conditions
Sunday Peak Hour

Level Of Service Computation Report
2000 HCM Unsignalized Method (Base Volume Alternative)

Intersection #7 Lake Gregory Drive/State Route 18

Average Delay (sec/veh): 4.2 Worst Case Level Of Service: B[14.5]

Approach:	North Bound			South Bound			East Bound			West Bound		
Movement:	L	T	R	L	T	R	L	T	R	L	T	R
Control:	Stop Sign			Stop Sign			Uncontrolled			Uncontrolled		
Rights:	Include			Include			Include			Include		
Lanes:	0 0 0 0 0			1 0 0 0 1			1 0 1 0 0			0 0 1 0 1		
Volume Module:												
Base Vol:	0	0	0	137	0	152	54	232	0	0	416	102
Growth Adj:	1.00	1.00	1.00	1.00	1.00	1.00	1.00	1.00	1.00	1.00	1.00	1.00
Initial Bse:	0	0	0	137	0	152	54	232	0	0	416	102
User Adj:	1.00	1.00	1.00	1.00	1.00	1.00	1.00	1.00	1.00	1.00	1.00	1.00
PHF Adj:	1.00	1.00	1.00	0.89	0.89	0.89	0.92	0.92	0.92	0.84	0.84	0.84
PHF Volume:	0	0	0	154	0	171	59	251	0	0	497	122
Reduct Vol:	0	0	0	0	0	0	0	0	0	0	0	0
FinalVolume:	0	0	0	154	0	171	59	251	0	0	497	122
Critical Gap Module:												
Critical Gp:	xxxxx	xxxx	xxxxx	6.4	xxxx	6.2	4.1	xxxx	xxxxx	xxxxx	xxxx	xxxxx
FollowUpTim:	xxxxx	xxxx	xxxxx	3.5	xxxx	3.3	2.2	xxxx	xxxxx	xxxxx	xxxx	xxxxx
Capacity Module:												
Cnflict Vol:	xxxx	xxxx	xxxxx	865	xxxx	497	619	xxxx	xxxxx	xxxx	xxxx	xxxxx
Potent Cap.:	xxxx	xxxx	xxxxx	327	xxxx	577	971	xxxx	xxxxx	xxxx	xxxx	xxxxx
Move Cap.:	xxxx	xxxx	xxxxx	312	xxxx	577	971	xxxx	xxxxx	xxxx	xxxx	xxxxx
Total Cap:	249	375	xxxxx	501	445	xxxxx	xxxx	xxxx	xxxxx	xxxx	xxxx	xxxxx
Volume/Cap:	xxxx	xxxx	xxxx	0.31	xxxx	0.30	0.06	xxxx	xxxx	xxxx	xxxx	xxxx
Level Of Service Module:												
2Way95thQ:	xxxx	xxxx	xxxxx	1.3	xxxx	1.2	0.2	xxxx	xxxxx	xxxx	xxxx	xxxxx
Control Del:	xxxxx	xxxx	xxxxx	15.3	xxxx	13.8	8.9	xxxx	xxxxx	xxxxx	xxxx	xxxxx
LOS by Move:	*	*	*	C	*	B	A	*	*	*	*	*
Movement:	LT	LTR	RT	LT	LTR	RT	LT	LTR	RT	LT	LTR	RT
Shared Cap.:	xxxx	xxxx	xxxxx	xxxx	xxxx	xxxxx	xxxx	xxxx	xxxxx	xxxx	xxxx	xxxxx
SharedQueue:	xxxxx	xxxx	xxxxx	xxxxx	xxxx	xxxxx	xxxxx	xxxx	xxxxx	xxxxx	xxxx	xxxxx
Shrd ConDel:	xxxxx	xxxx	xxxxx	xxxxx	xxxx	xxxxx	xxxxx	xxxx	xxxxx	xxxxx	xxxx	xxxxx
Shared LOS:	*	*	*	*	*	*	*	*	*	*	*	*
ApproachDel:	xxxxxx			14.5			xxxxxx			xxxxxx		
ApproachLOS:	*			B			*			*		

Note: Queue reported is the number of cars per lane.

Church of the Woods
Existing (2007) Traffic Conditions
Sunday Peak Hour

Level Of Service Computation Report
2000 HCM Unsignalized Method (Base Volume Alternative)

Intersection #8 Bear Springs Road/State Route 18

Average Delay (sec/veh): 2.1 Worst Case Level Of Service: C[17.3]

Approach:	North Bound						South Bound						East Bound						West Bound					
Movement:	L	-	T	-	R		L	-	T	-	R		L	-	T	-	R		L	-	T	-	R	
Control:	Stop Sign						Stop Sign						Uncontrolled						Uncontrolled					
Rights:	Include						Include						Include						Include					
Lanes:	0	0	1!	0	0		0	0	1!	0	0		1	0	0	1	0		1	0	0	1	0	
Volume Module:																								
Base Vol:	15		0		15		13		3		19		16		472		13		10		469		14	
Growth Adj:	1.00	1.00		1.00		1.00	1.00	1.00		1.00		1.00	1.00	1.00		1.00		1.00	1.00	1.00		1.00		1.00
Initial Bse:	15		0		15		13		3		19		16		472		13		10		469		14	
User Adj:	1.00	1.00		1.00		1.00	1.00	1.00		1.00		1.00	1.00	1.00		1.00		1.00	1.00	1.00		1.00		1.00
PHF Adj:	0.50	0.50		0.50		0.40	0.40		0.40			0.40	0.89	0.89		0.89		0.83	0.83		0.83			0.83
PHF Volume:	30		0		30		33		8		48		18		530		15		12		564		17	
Reduct Vol:	0		0		0		0		0		0		0		0		0		0		0		0	
FinalVolume:	30		0		30		33		8		48		18		530		15		12		564		17	
Critical Gap Module:																								
Critical Gp:	7.1	6.5		6.2		7.1	6.5		6.2			4.1	xxxx	xxxxx				4.1	xxxx	xxxxx				
FollowUpTim:	3.5	4.0		3.3		3.5	4.0		3.3			2.2	xxxx	xxxxx				2.2	xxxx	xxxxx				
Capacity Module:																								
Cnflict Vol:	1198	1179		538		1185	1178		573			581	xxxx	xxxxx				545	xxxx	xxxxx				
Potent Cap.:	164	192		547		167	192		523			1003	xxxx	xxxxx				1034	xxxx	xxxxx				
Move Cap.:	141	187		547		155	187		523			1003	xxxx	xxxxx				1034	xxxx	xxxxx				
Total Cap:	267	305		xxxxx		284	307		xxxxx			xxxx	xxxx	xxxxx				xxxx	xxxx	xxxxx				
Volume/Cap:	0.11	0.00		0.05		0.12	0.02		0.09			0.02	xxxx		xxxx			0.01	xxxx		xxxx			
Level Of Service Module:																								
2Way95thQ:	xxxx	xxxx		xxxxx		xxxx	xxxx		xxxxx			0.1	xxxx	xxxxx				0.0	xxxx	xxxxx				
Control Del:	xxxxx	xxxx		xxxxx		xxxxx	xxxx		xxxxx			8.7	xxxx	xxxxx				8.5	xxxx	xxxxx				
LOS by Move:	*	*		*		*	*		*			A	*		*			A	*		*			
Movement:	LT	-	LTR	-	RT		LT	-	LTR	-	RT		LT	-	LTR	-	RT		LT	-	LTR	-	RT	
Shared Cap.:	xxxx		359		xxxxx		xxxx		381		xxxxx		xxxx	xxxx		xxxxx			xxxx	xxxx		xxxxx		
SharedQueue:	xxxxx		0.6		xxxxx		xxxxx		0.9		xxxxx		xxxxx	xxxx		xxxxx			xxxxx	xxxx		xxxxx		
Shrd ConDel:	xxxxx		17.0		xxxxx		xxxxx		17.3		xxxxx		xxxxx	xxxx		xxxxx			xxxxx	xxxx		xxxxx		
Shared LOS:	*		C		*		*		C		*		*		*		*		*		*		*	
ApproachDel:			17.0						17.3						xxxxxx						xxxxxx			
ApproachLOS:			C						C						*						*			

Note: Queue reported is the number of cars per lane.

Church of the Woods
Existing (2007) Traffic Conditions
Sunday Peak Hour

Level Of Service Computation Report
2000 HCM Unsignalized Method (Base Volume Alternative)

Intersection #10 Daley Canyon Road/State Route 18

Average Delay (sec/veh): 6.2 Worst Case Level Of Service: C[15.5]

Approach:	North Bound					South Bound					East Bound					West Bound				
Movement:	L	-	T	-	R	L	-	T	-	R	L	-	T	-	R	L	-	T	-	R
Control:	Stop Sign					Stop Sign					Uncontrolled					Uncontrolled				
Rights:	Include					Include					Include					Include				
Lanes:	0	0	0	0	0	0	0	0	0	1	1	0	1	0	0	0	0	1	0	0
Volume Module:																				
Base Vol:	0	0	0	0	0	285	171	263	0	0	293	0								
Growth Adj:	1.00	1.00	1.00	1.00	1.00	1.00	1.00	1.00	1.00	1.00	1.00	1.00								
Initial Bse:	0	0	0	0	0	285	171	263	0	0	293	0								
User Adj:	1.00	1.00	1.00	1.00	1.00	1.00	1.00	1.00	1.00	1.00	1.00	1.00								
PHF Adj:	1.00	1.00	1.00	1.00	1.00	0.76	0.86	0.85	1.00	1.00	0.89	1.00								
PHF Volume:	0	0	0	0	0	376	200	309	0	0	331	0								
Reduct Vol:	0	0	0	0	0	0	0	0	0	0	0	0								
FinalVolume:	0	0	0	0	0	376	200	309	0	0	331	0								
Critical Gap Module:																				
Critical Gp:	xxxxx	xxxx	xxxxx	xxxxx	xxxx	6.2	4.1	xxxx	xxxxx	xxxxx	xxxx	xxxxx								
FollowUpTim:	xxxxx	xxxx	xxxxx	xxxxx	xxxx	3.3	2.2	xxxx	xxxxx	xxxxx	xxxx	xxxxx								
Capacity Module:																				
Cnflict Vol:	xxxx	xxxx	xxxxx	xxxx	xxxx	331	331	xxxx	xxxxx	xxxx	xxxx	xxxxx								
Potent Cap.:	xxxx	xxxx	xxxxx	xxxx	xxxx	715	1240	xxxx	xxxxx	xxxx	xxxx	xxxxx								
Move Cap.:	xxxx	xxxx	xxxxx	xxxx	xxxx	715	1240	xxxx	xxxxx	xxxx	xxxx	xxxxx								
Volume/Cap:	xxxx	xxxx	xxxx	xxxx	xxxx	0.53	0.16	xxxx	xxxx	xxxx	xxxx	xxxx								
Level Of Service Module:																				
2Way95thQ:	xxxx	xxxx	xxxxx	xxxx	xxxx	3.1	0.6	xxxx	xxxxx	xxxx	xxxx	xxxxx								
Control Del:	xxxxx	xxxx	xxxxx	xxxxx	xxxx	15.5	8.5	xxxx	xxxxx	xxxxx	xxxx	xxxxx								
LOS by Move:	*	*	*	*	*	C	A	*	*	*	*	*								
Movement:	LT	-	LTR	-	RT	LT	-	LTR	-	RT	LT	-	LTR	-	RT	LT	-	LTR	-	RT
Shared Cap.:	xxxx	xxxx	xxxxx	xxxx	xxxx	xxxxx	xxxx	xxxx	xxxxx	xxxx	xxxx	xxxxx								
SharedQueue:	xxxxx	xxxx	xxxxx	xxxxx	xxxx	xxxxx	xxxxx	xxxx	xxxxx	xxxxx	xxxx	xxxxx								
Shrd ConDel:	xxxxx	xxxx	xxxxx	xxxxx	xxxx	xxxxx	xxxxx	xxxx	xxxxx	xxxxx	xxxx	xxxxx								
Shared LOS:	*	*	*	*	*	*	*	*	*	*	*	*								
ApproachDel:	xxxxxx					15.5	xxxxxx				xxxxxx									
ApproachLOS:	*					C	*				*									

Note: Queue reported is the number of cars per lane.

Church of the Woods
Existing (2007) Traffic Conditions
Sunday Peak Hour

Level Of Service Computation Report
2000 HCM Unsignalized Method (Base Volume Alternative)

Intersection #11 Daley Canyon Road/Daley Canyon Access Road

Average Delay (sec/veh): 4.7 Worst Case Level Of Service: B[11.2]

Approach:	North Bound			South Bound			East Bound			West Bound		
Movement:	L	T	R	L	T	R	L	T	R	L	T	R
Control:	Uncontrolled			Uncontrolled			Stop Sign			Stop Sign		
Rights:	Include			Include			Include			Include		
Lanes:	0 0 1	0	0	0 1	0 0	0	0 0 0	0	0	0 0 0	0	1
Volume Module:												
Base Vol:	0	171	0	169	285	0	0	0	0	0	0	139
Growth Adj:	1.00	1.00	1.00	1.00	1.00	1.00	1.00	1.00	1.00	1.00	1.00	1.00
Initial Bse:	0	171	0	169	285	0	0	0	0	0	0	139
User Adj:	1.00	1.00	1.00	1.00	1.00	1.00	1.00	1.00	1.00	1.00	1.00	1.00
PHF Adj:	1.00	0.86	1.00	0.60	0.76	1.00	1.00	1.00	1.00	1.00	1.00	0.52
PHF Volume:	0	200	0	280	376	0	0	0	0	0	0	270
Reduct Vol:	0	0	0	0	0	0	0	0	0	0	0	0
FinalVolume:	0	200	0	280	376	0	0	0	0	0	0	270
Critical Gap Module:												
Critical Gp:	xxxxx	xxxx	xxxxx	4.1	xxxx	xxxxx	xxxxx	xxxx	xxxxx	xxxxx	xxxx	6.2
FollowUpTim:	xxxxx	xxxx	xxxxx	2.2	xxxx	xxxxx	xxxxx	xxxx	xxxxx	xxxxx	xxxx	3.3
Capacity Module:												
Cnflict Vol:	xxxx	xxxx	xxxxx	200	xxxx	xxxxx	xxxx	xxxx	xxxxx	xxxx	xxxx	200
Potent Cap.:	xxxx	xxxx	xxxxx	1385	xxxx	xxxxx	xxxx	xxxx	xxxxx	xxxx	xxxx	846
Move Cap.:	xxxx	xxxx	xxxxx	1385	xxxx	xxxxx	xxxx	xxxx	xxxxx	xxxx	xxxx	846
Volume/Cap:	xxxx	xxxx	xxxx	0.20	xxxx	xxxx	xxxx	xxxx	xxxx	xxxx	xxxx	0.32
Level Of Service Module:												
2Way95thQ:	xxxx	xxxx	xxxxx	0.8	xxxx	xxxxx	xxxx	xxxx	xxxxx	xxxx	xxxx	1.4
Control Del:	xxxxx	xxxx	xxxxx	8.3	xxxx	xxxxx	xxxxx	xxxx	xxxxx	xxxxx	xxxx	11.2
LOS by Move:	*	*	*	A	*	*	*	*	*	*	*	B
Movement:	LT -	LTR -	RT	LT -	LTR -	RT	LT -	LTR -	RT	LT -	LTR -	RT
Shared Cap.:	xxxx	xxxx	xxxxx	xxxx	xxxx	xxxxx	xxxx	xxxx	xxxxx	xxxx	xxxx	xxxxx
SharedQueue:	xxxxx	xxxx	xxxxx	0.8	xxxx	xxxxx	xxxxx	xxxx	xxxxx	xxxxx	xxxx	xxxxx
Shrd ConDel:	xxxxx	xxxx	xxxxx	8.3	xxxx	xxxxx	xxxxx	xxxx	xxxxx	xxxxx	xxxx	xxxxx
Shared LOS:	*	*	*	A	*	*	*	*	*	*	*	*
ApproachDel:	xxxxxx			xxxxxx			xxxxxx			11.2		
ApproachLOS:	*			*			*			B		

Note: Queue reported is the number of cars per lane.

Church of the Woods
Existing (2007) Traffic Conditions
Sunday Peak Hour

Level Of Service Computation Report
2000 HCM Unsignalized Method (Base Volume Alternative)

Intersection #12 Daley Canyon Access Road/State Route 18

Average Delay (sec/veh): 6.1 Worst Case Level Of Service: D[26.1]

Approach:	North Bound					South Bound					East Bound					West Bound				
Movement:	L	-	T	-	R	L	-	T	-	R	L	-	T	-	R	L	-	T	-	R
Control:	Stop Sign					Stop Sign					Uncontrolled					Uncontrolled				
Rights:	Include					Include					Include					Include				
Lanes:	0	0	0	0	0	1	0	0	0	0	0	0	1	0	0	0	0	1	0	1
Volume Module:																				
Base Vol:	0	0	0			169	0	0			0	263	0			0	293	139		
Growth Adj:	1.00	1.00	1.00			1.00	1.00	1.00			1.00	1.00	1.00			1.00	1.00	1.00		
Initial Bse:	0	0	0			169	0	0			0	263	0			0	293	139		
User Adj:	1.00	1.00	1.00			1.00	1.00	1.00			1.00	1.00	1.00			1.00	1.00	1.00		
PHF Adj:	1.00	1.00	1.00			0.60	1.00	1.00			1.00	0.85	1.00			1.00	0.89	0.52		
PHF Volume:	0	0	0			280	0	0			0	309	0			0	331	270		
Reduct Vol:	0	0	0			0	0	0			0	0	0			0	0	0		
FinalVolume:	0	0	0			280	0	0			0	309	0			0	331	270		
Critical Gap Module:																				
Critical Gp:	xxxxx	xxxx	xxxxx			6.4	xxxx	xxxxx			xxxxx	xxxx	xxxxx			xxxxx	xxxx	xxxxx		
FollowUpTim:	xxxxx	xxxx	xxxxx			3.5	xxxx	xxxxx			xxxxx	xxxx	xxxxx			xxxxx	xxxx	xxxxx		
Capacity Module:																				
Cnflict Vol:	xxxx	xxxx	xxxxx			640	xxxx	xxxxx			xxxx	xxxx	xxxxx			xxxx	xxxx	xxxxx		
Potent Cap.:	xxxx	xxxx	xxxxx			443	xxxx	xxxxx			xxxx	xxxx	xxxxx			xxxx	xxxx	xxxxx		
Move Cap.:	xxxx	xxxx	xxxxx			443	xxxx	xxxxx			xxxx	xxxx	xxxxx			xxxx	xxxx	xxxxx		
Volume/Cap:	xxxx	xxxx	xxxx			0.63	xxxx	xxxx			xxxx	xxxx	xxxx			xxxx	xxxx	xxxx		
Level Of Service Module:																				
2Way95thQ:	xxxx	xxxx	xxxxx			4.3	xxxx	xxxxx			xxxx	xxxx	xxxxx			xxxx	xxxx	xxxxx		
Control Del:	xxxxx	xxxx	xxxxx			26.1	xxxx	xxxxx			xxxxx	xxxx	xxxxx			xxxxx	xxxx	xxxxx		
LOS by Move:	*	*	*			D	*	*			*	*	*			*	*	*		
Movement:	LT	-	LTR	-	RT	LT	-	LTR	-	RT	LT	-	LTR	-	RT	LT	-	LTR	-	RT
Shared Cap.:	xxxx	xxxx	xxxxx			xxxx	xxxx	xxxxx			xxxx	xxxx	xxxxx			xxxx	xxxx	xxxxx		
SharedQueue:	xxxxx	xxxx	xxxxx			xxxxx	xxxx	xxxxx			xxxxx	xxxx	xxxxx			xxxxx	xxxx	xxxxx		
Shrd ConDel:	xxxxx	xxxx	xxxxx			xxxxx	xxxx	xxxxx			xxxxx	xxxx	xxxxx			xxxxx	xxxx	xxxxx		
Shared LOS:	*	*	*			*	*	*			*	*	*			*	*	*		
ApproachDel:	xxxxxx					26.1					xxxxxx					xxxxxx				
ApproachLOS:	*					D					*					*				

Note: Queue reported is the number of cars per lane.

Church of the Woods
Existing (2007) Traffic Conditions
Sunday Peak Hour

Level Of Service Computation Report
2000 HCM Unsignalized Method (Base Volume Alternative)

Intersection #13 State Route 173/State Route 18

Average Delay (sec/veh): 5.9 Worst Case Level Of Service: C[16.6]

Approach:	North Bound						South Bound						East Bound						West Bound					
Movement:	L	-	T	-	R		L	-	T	-	R		L	-	T	-	R		L	-	T	-	R	
Control:	Stop Sign						Stop Sign						Uncontrolled						Uncontrolled					
Rights:	Include						Include						Include						Include					
Lanes:	0	0	0	0	0		0	0	1!	0	0		1	0	1	0	0		0	0	1	0	1	
Volume Module:																								
Base Vol:	0	0	0				45	0			138		216		157		0		0		167		117	
Growth Adj:	1.00	1.00	1.00				1.00	1.00			1.00		1.00		1.00		1.00		1.00		1.00		1.00	
Initial Bse:	0	0	0				45	0			138		216		157		0		0		167		117	
User Adj:	1.00	1.00	1.00				1.00	1.00			1.00		1.00		1.00		1.00		1.00		1.00		1.00	
PHF Adj:	1.00	1.00	1.00				0.82	0.82			0.82		0.80		0.80		0.80		0.85		0.85		0.85	
PHF Volume:	0	0	0				55	0			167		271		197		0		0		197		138	
Reduct Vol:	0	0	0				0	0			0		0		0		0		0		0		0	
FinalVolume:	0	0	0				55	0			167		271		197		0		0		197		138	
Critical Gap Module:																								
Critical Gp:	xxxxx	xxxx	xxxxx				6.4		6.5		6.2		4.1	xxxx	xxxxx	xxxxx	xxxx	xxxxx						
FollowUpTim:	xxxxx	xxxx	xxxxx				3.5		4.0		3.3		2.2	xxxx	xxxxx	xxxxx	xxxx	xxxxx						
Capacity Module:																								
Cnflict Vol:	xxxx	xxxx	xxxxx				935		935		197		335	xxxx	xxxxx	xxxx	xxxx	xxxxx						
Potent Cap.:	xxxx	xxxx	xxxxx				297		267		849		1236	xxxx	xxxxx	xxxx	xxxx	xxxxx						
Move Cap.:	xxxx	xxxx	xxxxx				247		209		849		1236	xxxx	xxxxx	xxxx	xxxx	xxxxx						
Volume/Cap:	xxxx	xxxx	xxxx				0.22		0.00		0.20		0.22	xxxx	xxxx	xxxx	xxxx	xxxx						
Level Of Service Module:																								
2Way95thQ:	xxxx	xxxx	xxxxx				xxxx	xxxx	xxxxx				0.8	xxxx	xxxxx	xxxx	xxxx	xxxxx						
Control Del:	xxxxx	xxxx	xxxxx				xxxxx	xxxx	xxxxx				8.7	xxxx	xxxxx	xxxxx	xxxx	xxxxx						
LOS by Move:	*	*	*				*	*	*				A	*	*	*	*	*						
Movement:	LT	-	LTR	-	RT		LT	-	LTR	-	RT		LT	-	LTR	-	RT		LT	-	LTR	-	RT	
Shared Cap.:	xxxx	xxxx	xxxxx				xxxx		531		xxxxx		xxxx	xxxx	xxxxx				xxxx	xxxx	xxxxx			
SharedQueue:	xxxxx	xxxx	xxxxx				xxxxx		2.0		xxxxx		xxxxx	xxxx	xxxxx				xxxxx	xxxx	xxxxx			
Shrd ConDel:	xxxxx	xxxx	xxxxx				xxxxx		16.6		xxxxx		xxxxx	xxxx	xxxxx				xxxxx	xxxx	xxxxx			
Shared LOS:	*	*	*				*		C		*		*	*	*				*	*	*			
ApproachDel:	xxxxxx						16.6						xxxxxx						xxxxxx					
ApproachLOS:	*						C						*						*					

Note: Queue reported is the number of cars per lane.

OPENING YEAR (2009) WITHOUT PROJECT CONDITIONS

Church of the Woods
Opening Year (2009) Without Project Traffic Conditions
Saturday Peak Hour

Level Of Service Computation Report
2000 HCM Unsignalized Method (Base Volume Alternative)

Intersection #1 North Road/State Route 189

Average Delay (sec/veh): 7.7 Worst Case Level Of Service: C[21.0]

Approach:	North Bound					South Bound					East Bound					West Bound				
Movement:	L	-	T	-	R	L	-	T	-	R	L	-	T	-	R	L	-	T	-	R
Control:	Stop Sign					Stop Sign					Uncontrolled					Uncontrolled				
Rights:	Include					Include					Include					Include				
Lanes:	0	0	0	0	0	0	0	1!	0	0	0	1	0	0	0	0	0	0	1	0
Volume Module:																				
Base Vol:	0	0	0	170	0	52	38	168	0	0	162	141								
Growth Adj:	1.00	1.00	1.00	1.00	1.00	1.00	1.00	1.00	1.00	1.00	1.00	1.00								
Initial Bse:	0	0	0	170	0	52	38	168	0	0	162	141								
User Adj:	1.00	1.00	1.00	1.00	1.00	1.00	1.00	1.00	1.00	1.00	1.00	1.00								
PHF Adj:	1.00	1.00	1.00	0.71	0.71	0.71	0.82	0.82	0.82	0.90	0.90	0.90								
PHF Volume:	0	0	0	239	0	73	46	204	0	0	179	156								
Reduct Vol:	0	0	0	0	0	0	0	0	0	0	0	0								
FinalVolume:	0	0	0	239	0	73	46	204	0	0	179	156								
Critical Gap Module:																				
Critical Gp:	xxxxx	xxxx	xxxxx	6.4	6.5	6.2	4.1	xxxx	xxxxx	xxxxx	xxxx	xxxxx								
FollowUpTim:	xxxxx	xxxx	xxxxx	3.5	4.0	3.3	2.2	xxxx	xxxxx	xxxxx	xxxx	xxxxx								
Capacity Module:																				
Cnflict Vol:	xxxx	xxxx	xxxxx	554	554	257	336	xxxx	xxxxx	xxxx	xxxx	xxxxx								
Potent Cap.:	xxxx	xxxx	xxxxx	497	443	786	1235	xxxx	xxxxx	xxxx	xxxx	xxxxx								
Move Cap.:	xxxx	xxxx	xxxxx	483	427	786	1235	xxxx	xxxxx	xxxx	xxxx	xxxxx								
Volume/Cap:	xxxx	xxxx	xxxx	0.50	0.00	0.09	0.04	xxxx	xxxx	xxxx	xxxx	xxxx								
Level Of Service Module:																				
2Way95thQ:	xxxx	xxxx	xxxxx	xxxx	xxxx	xxxxx	0.1	xxxx	xxxxx	xxxx	xxxx	xxxxx								
Control Del:	xxxxx	xxxx	xxxxx	xxxxx	xxxx	xxxxx	8.0	xxxx	xxxxx	xxxxx	xxxx	xxxxx								
LOS by Move:	*	*	*	*	*	*	A	*	*	*	*	*								
Movement:	LT	-	LTR	-	RT	LT	-	LTR	-	RT	LT	-	LTR	-	RT	LT	-	LTR	-	RT
Shared Cap.:	xxxx	xxxx	xxxxx	xxxx	531	xxxxx	xxxx	xxxx	xxxxx	xxxx	xxxx	xxxxx								
SharedQueue:	xxxxx	xxxx	xxxxx	xxxxx	3.8	xxxxx	0.1	xxxx	xxxxx	xxxxx	xxxx	xxxxx								
Shrd ConDel:	xxxxx	xxxx	xxxxx	xxxxx	21.0	xxxxx	8.0	xxxx	xxxxx	xxxxx	xxxx	xxxxx								
Shared LOS:	*	*	*	*	C	*	A	*	*	*	*	*								
ApproachDel:	xxxxxx				21.0		xxxxxx				xxxxxx									
ApproachLOS:	*				C		*				*									

Note: Queue reported is the number of cars per lane.

Church of the Woods
Opening Year (2009) Without Project Traffic Conditions
Saturday Peak Hour

Level Of Service Computation Report
2000 HCM Unsignalized Method (Base Volume Alternative)

Intersection #2 Bear Springs Road/State Route 189

Average Delay (sec/veh): 4.8 Worst Case Level Of Service: C[17.8]

Approach:	North Bound						South Bound						East Bound						West Bound					
Movement:	L	-	T	-	R		L	-	T	-	R		L	-	T	-	R		L	-	T	-	R	
Control:	Stop Sign						Stop Sign						Uncontrolled						Uncontrolled					
Rights:	Include						Include						Include						Include					
Lanes:	0	0	1!	0	0		0	0	1!	0	0		0	0	1!	0	0		0	0	1!	0	0	
Volume Module:																								
Base Vol:	21	14	15	36	11	62	66	221	33	11	219	33												
Growth Adj:	1.00	1.00	1.00	1.00	1.00	1.00	1.00	1.00	1.00	1.00	1.00	1.00												
Initial Bse:	21	14	15	36	11	62	66	221	33	11	219	33												
User Adj:	1.00	1.00	1.00	1.00	1.00	1.00	1.00	1.00	1.00	1.00	1.00	1.00												
PHF Adj:	0.66	0.66	0.66	0.80	0.80	0.80	0.86	0.86	0.86	0.91	0.91	0.91												
PHF Volume:	32	21	23	45	14	78	76	256	38	12	241	36												
Reduct Vol:	0	0	0	0	0	0	0	0	0	0	0	0												
FinalVolume:	32	21	23	45	14	78	76	256	38	12	241	36												
Critical Gap Module:																								
Critical Gp:	7.1	6.5	6.2	7.1	6.5	6.2	4.1	xxxx	xxxxx	4.1	xxxx	xxxxx												
FollowUpTim:	3.5	4.0	3.3	3.5	4.0	3.3	2.2	xxxx	xxxxx	2.2	xxxx	xxxxx												
Capacity Module:																								
Cnflict Vol:	757	730	275	734	731	260	278	xxxx	xxxxx	294	xxxx	xxxxx												
Potent Cap.:	326	352	769	339	351	784	1297	xxxx	xxxxx	1279	xxxx	xxxxx												
Move Cap.:	269	327	769	296	327	784	1297	xxxx	xxxxx	1279	xxxx	xxxxx												
Volume/Cap:	0.12	0.06	0.03	0.15	0.04	0.10	0.06	xxxx	xxxx	0.01	xxxx	xxxx												
Level Of Service Module:																								
2Way95thQ:	xxxx	xxxx	xxxxx	xxxx	xxxx	xxxxx	0.2	xxxx	xxxxx	0.0	xxxx	xxxxx												
Control Del:	xxxxx	xxxx	xxxxx	xxxxx	xxxx	xxxxx	8.0	xxxx	xxxxx	7.8	xxxx	xxxxx												
LOS by Move:	*	*	*	*	*	*	A	*	*	A	*	*												
Movement:	LT	-	LTR	-	RT		LT	-	LTR	-	RT		LT	-	LTR	-	RT		LT	-	LTR	-	RT	
Shared Cap.:	xxxx	356	xxxxx	xxxx	465	xxxxx	xxxx	xxxx	xxxxx	xxxx	xxxx	xxxxx												
SharedQueue:	xxxxx	0.8	xxxxx	xxxxx	1.2	xxxxx	xxxxx	xxxx	xxxxx	xxxxx	xxxx	xxxxx												
Shrd ConDel:	xxxxx	17.8	xxxxx	xxxxx	15.9	xxxxx	xxxxx	xxxx	xxxxx	xxxxx	xxxx	xxxxx												
Shared LOS:	*	C	*	*	C	*	*	*	*	*	*	*												
ApproachDel:	17.8			15.9			xxxxxx			xxxxxx														
ApproachLOS:	C			C			*			*														

Note: Queue reported is the number of cars per lane.

Church of the Woods
Opening Year (2009) Without Project Traffic Conditions
Saturday Peak Hour

Level Of Service Computation Report
2000 HCM Unsignalized Method (Base Volume Alternative)

Intersection #3 Grass Valley Road/State Route 189

Average Delay (sec/veh): 118.8 Worst Case Level Of Service: F[236.4]

Approach:	North Bound			South Bound			East Bound			West Bound		
Movement:	L	T	R	L	T	R	L	T	R	L	T	R
Control:	Stop Sign			Stop Sign			Uncontrolled			Uncontrolled		
Rights:	Include			Include			Include			Include		
Lanes:	0 0 0 0 0			0 0 1! 0 0			1 0 1 0 0			0 0 0 1 0		
Volume Module:												
Base Vol:	0	0	0	359	0	250	122	211	0	0	86	185
Growth Adj:	1.00	1.00	1.00	1.00	1.00	1.00	1.00	1.00	1.00	1.00	1.00	1.00
Initial Bse:	0	0	0	359	0	250	122	211	0	0	86	185
User Adj:	1.00	1.00	1.00	1.00	1.00	1.00	1.00	1.00	1.00	1.00	1.00	1.00
PHF Adj:	1.00	1.00	1.00	0.81	0.81	0.81	0.78	0.78	0.78	0.83	0.83	0.83
PHF Volume:	0	0	0	443	0	308	157	272	0	0	103	222
Reduct Vol:	0	0	0	0	0	0	0	0	0	0	0	0
FinalVolume:	0	0	0	443	0	308	157	272	0	0	103	222
Critical Gap Module:												
Critical Gp:	xxxxx	xxxx	xxxxx	6.4	6.5	6.2	4.1	xxxx	xxxxx	xxxxx	xxxx	xxxxx
FollowUpTim:	xxxxx	xxxx	xxxxx	3.5	4.0	3.3	2.2	xxxx	xxxxx	xxxxx	xxxx	xxxxx
Capacity Module:												
Cnflict Vol:	xxxx	xxxx	xxxxx	800	800	215	326	xxxx	xxxxx	xxxx	xxxx	xxxxx
Potent Cap.:	xxxx	xxxx	xxxxx	357	320	830	1245	xxxx	xxxxx	xxxx	xxxx	xxxxx
Move Cap.:	xxxx	xxxx	xxxxx	322	280	830	1245	xxxx	xxxxx	xxxx	xxxx	xxxxx
Total Cap:	202	321	xxxxx	409	362	xxxxx	xxxx	xxxx	xxxxx	xxxx	xxxx	xxxxx
Volume/Cap:	xxxx	xxxx	xxxx	1.08	0.00	0.37	0.13	xxxx	xxxx	xxxx	xxxx	xxxx
Level Of Service Module:												
2Way95thQ:	xxxx	xxxx	xxxxx	xxxx	xxxx	xxxxx	0.4	xxxx	xxxxx	xxxx	xxxx	xxxxx
Control Del:	xxxxx	xxxx	xxxxx	xxxxx	xxxx	xxxxx	8.3	xxxx	xxxxx	xxxxx	xxxx	xxxxx
LOS by Move:	*	*	*	*	*	*	A	*	*	*	*	*
Movement:	LT	LTR	RT	LT	LTR	RT	LT	LTR	RT	LT	LTR	RT
Shared Cap.:	xxxx	xxxx	xxxxx	xxxx	517	xxxxx	xxxx	xxxx	xxxxx	xxxx	xxxx	xxxxx
SharedQueue:	xxxxx	xxxx	xxxxx	xxxxx	36.9	xxxxx	xxxxx	xxxx	xxxxx	xxxxx	xxxx	xxxxx
Shrd ConDel:	xxxxx	xxxx	xxxxx	xxxxx	236	xxxxx	xxxxx	xxxx	xxxxx	xxxxx	xxxx	xxxxx
Shared LOS:	*	*	*	*	F	*	*	*	*	*	*	*
ApproachDel:	xxxxxx			236.4			xxxxxx			xxxxxx		
ApproachLOS:	*			F			*			*		

Note: Queue reported is the number of cars per lane.

Church of the Woods
Opening Year (2009) Without Project Traffic Conditions
Saturday Peak Hour

Level Of Service Computation Report
2000 HCM 4-Way Stop Method (Base Volume Alternative)

Intersection #4 Daley Canyon Road/State Route 189

Cycle (sec): 100 | Critical Vol./Cap.(X): 1.156
Loss Time (sec): 0 (Y+R=4.0 sec) | Average Delay (sec/veh): 81.2
Optimal Cycle: 0 | Level Of Service: F

Approach:	North Bound				South Bound				East Bound				West Bound			
Movement:	L	- T	- R		L	- T	- R		L	- T	- R		L	- T	- R	
Control:	Stop Sign				Stop Sign				Stop Sign				Stop Sign			
Rights:	Include				Include				Include				Include			
Min. Green:	10	10	10	10	10	10	10	10	10	10	10	10	10	10	10	10
Lanes:	0 1	0 0	0	0 0	0	0 0	1	0	0 0	1!	0	0 0	0	0 0	0	0
Volume Module:																
Base Vol:	190	340	0	0	253	76	313	0	283	0	0	0				
Growth Adj:	1.00	1.00	1.00	1.00	1.00	1.00	1.00	1.00	1.00	1.00	1.00	1.00				
Initial Bse:	190	340	0	0	253	76	313	0	283	0	0	0				
User Adj:	1.00	1.00	1.00	1.00	1.00	1.00	1.00	1.00	1.00	1.00	1.00	1.00				
PHF Adj:	0.91	0.91	0.91	0.90	0.90	0.90	0.89	0.89	0.89	1.00	1.00	1.00				
PHF Volume:	210	376	0	0	280	84	350	0	317	0	0	0				
Reduct Vol:	0	0	0	0	0	0	0	0	0	0	0	0				
Reduced Vol:	210	376	0	0	280	84	350	0	317	0	0	0				
PCE Adj:	1.00	1.00	1.00	1.00	1.00	1.00	1.00	1.00	1.00	1.00	1.00	1.00				
MLF Adj:	1.00	1.00	1.00	1.00	1.00	1.00	1.00	1.00	1.00	1.00	1.00	1.00				
FinalVolume:	210	376	0	0	280	84	350	0	317	0	0	0				
Saturation Flow Module:																
Adjustment:	1.00	1.00	1.00	1.00	1.00	1.00	1.00	1.00	1.00	1.00	1.00	1.00				
Lanes:	0.36	0.64	0.00	0.00	0.77	0.23	0.53	0.00	0.47	0.00	0.00	0.00				
Final Sat.:	196	352	0	0	413	124	303	0	274	0	0	0				
Capacity Analysis Module:																
Vol/Sat:	1.07	1.07	xxxx	xxxx	0.68	0.68	1.16	xxxx	1.16	xxxx	xxxx	xxxx				
Crit Moves:	****				****		****									
Delay/Veh:	83.3	83.3	0.0	0.0	22.8	22.8	111.2	0.0	111.2	0.0	0.0	0.0				
Delay Adj:	1.00	1.00	1.00	1.00	1.00	1.00	1.00	1.00	1.00	1.00	1.00	1.00				
AdjDel/Veh:	83.3	83.3	0.0	0.0	22.8	22.8	111.2	0.0	111.2	0.0	0.0	0.0				
LOS by Move:	F	F	*	*	C	C	F	*	F	*	*	*				
ApproachDel:	83.3				22.8		111.2			xxxxxx						
Delay Adj:	1.00				1.00		1.00			xxxxx						
ApprAdjDel:	83.3				22.8		111.2			xxxxxx						
LOS by Appr:	F				C		F			*						
AllWayAvgQ:	11.2	11.2	11.2	1.9	1.9	1.9	16.3	16.3	16.3	0.0	0.0	0.0				

Note: Queue reported is the number of cars per lane.

Church of the Woods
Opening Year (2009) Without Project Traffic Conditions
Saturday Peak Hour

Level Of Service Computation Report
2000 HCM 4-Way Stop Method (Base Volume Alternative)

Intersection #5 North Bay Road/State Route 189

Cycle (sec): 100 | Critical Vol./Cap.(X): 0.669
Loss Time (sec): 0 (Y+R=4.0 sec) | Average Delay (sec/veh): 18.9
Optimal Cycle: 0 | Level Of Service: C

Approach:	North Bound						South Bound						East Bound						West Bound					
Movement:	L	-	T	-	R		L	-	T	-	R		L	-	T	-	R		L	-	T	-	R	
Control:	Stop Sign						Stop Sign						Stop Sign						Stop Sign					
Rights:	Include						Include						Include						Include					
Min. Green:	10	10	10	10	10	10	10	10	10	10	10	10	10	10	10	10	10	10	10	10	10	10	10	10
Lanes:	0	0	0	0	0		1	0	0	0	1		1	0	1	0	0		0	0	0	1	0	
Volume Module:																								
Base Vol:	0	0	0	140	0	278	295	323	0	0	220	105												
Growth Adj:	1.00	1.00	1.00	1.00	1.00	1.00	1.00	1.00	1.00	1.00	1.00	1.00												
Initial Bse:	0	0	0	140	0	278	295	323	0	0	220	105												
User Adj:	1.00	1.00	1.00	1.00	1.00	1.00	1.00	1.00	1.00	1.00	1.00	1.00												
PHF Adj:	1.00	1.00	1.00	0.95	0.95	0.95	0.86	0.86	0.86	0.87	0.87	0.87												
PHF Volume:	0	0	0	148	0	294	342	374	0	0	253	121												
Reduct Vol:	0	0	0	0	0	0	0	0	0	0	0	0												
Reduced Vol:	0	0	0	148	0	294	342	374	0	0	253	121												
PCE Adj:	1.00	1.00	1.00	1.00	1.00	1.00	1.00	1.00	1.00	1.00	1.00	1.00												
MLF Adj:	1.00	1.00	1.00	1.00	1.00	1.00	1.00	1.00	1.00	1.00	1.00	1.00												
FinalVolume:	0	0	0	148	0	294	342	374	0	0	253	121												
Saturation Flow Module:																								
Adjustment:	1.00	1.00	1.00	1.00	1.00	1.00	1.00	1.00	1.00	1.00	1.00	1.00												
Lanes:	0.00	0.00	0.00	1.00	0.00	1.00	1.00	1.00	0.00	0.00	0.68	0.32												
Final Sat.:	0	0	0	469	0	555	519	560	0	0	387	185												
Capacity Analysis Module:																								
Vol/Sat:	xxxx	xxxx	xxxx	0.32	xxxx	0.53	0.66	0.67	xxxx	xxxx	0.65	0.65												
Crit Moves:						****		****			****													
Delay/Veh:	0.0	0.0	0.0	13.5	0.0	15.5	21.5	20.6	0.0	0.0	19.8	19.8												
Delay Adj:	1.00	1.00	1.00	1.00	1.00	1.00	1.00	1.00	1.00	1.00	1.00	1.00												
AdjDel/Veh:	0.0	0.0	0.0	13.5	0.0	15.5	21.5	20.6	0.0	0.0	19.8	19.8												
LOS by Move:	*	*	*	B	*	C	C	C	*	*	C	C												
ApproachDel:	xxxxxx			14.8			21.1			19.8														
Delay Adj:	xxxxx			1.00			1.00			1.00														
ApprAdjDel:	xxxxxx			14.8			21.1			19.8														
LOS by Appr:	*			B			C			C														
AllWayAvgQ:	0.0	0.0	0.0	0.4	0.0	1.0	1.7	1.8	0.0	1.7	1.7	1.7												

Note: Queue reported is the number of cars per lane.

Church of the Woods
Opening Year (2009) Without Project Traffic Conditions
Saturday Peak Hour

Level Of Service Computation Report
2000 HCM Unsignalized Method (Base Volume Alternative)

Intersection #6 Lake Gregory Road/State Route 189

Average Delay (sec/veh): 4.9 Worst Case Level Of Service: C[19.7]

Approach:	North Bound					South Bound					East Bound					West Bound				
Movement:	L	-	T	-	R	L	-	T	-	R	L	-	T	-	R	L	-	T	-	R
Control:	Uncontrolled					Uncontrolled					Stop Sign					Stop Sign				
Rights:	Include					Include					Include					Include				
Lanes:	0	0	0	1	0	0	1	0	0	0	0	0	0	0	0	0	0	1!	0	0
Volume Module:																				
Base Vol:	0	201		67		103	274		0		0		0		0	73		0		84
Growth Adj:	1.00	1.00		1.00		1.00	1.00		1.00		1.00		1.00		1.00	1.00		1.00		1.00
Initial Bse:	0	201		67		103	274		0		0		0		0	73		0		84
User Adj:	1.00	1.00		1.00		1.00	1.00		1.00		1.00		1.00		1.00	1.00		1.00		1.00
PHF Adj:	0.86	0.86		0.86		0.78	0.78		0.78		1.00		1.00		1.00	0.82		0.82		0.82
PHF Volume:	0	235		78		132	350		0		0		0		0	89		0		103
Reduct Vol:	0	0		0		0	0		0		0		0		0	0		0		0
FinalVolume:	0	235		78		132	350		0		0		0		0	89		0		103
Critical Gap Module:																				
Critical Gp:	xxxxx	xxxx		xxxxx		4.1	xxxx		xxxxx		xxxxx		xxxx		xxxxx	6.4		6.5		6.2
FollowUpTim:	xxxxx	xxxx		xxxxx		2.2	xxxx		xxxxx		xxxxx		xxxx		xxxxx	3.5		4.0		3.3
Capacity Module:																				
Cnflict Vol:	xxxx	xxxx		xxxxx		313	xxxx		xxxxx		xxxx		xxxx		xxxxx	887		887		274
Potent Cap.:	xxxx	xxxx		xxxxx		1259	xxxx		xxxxx		xxxx		xxxx		xxxxx	317		285		770
Move Cap.:	xxxx	xxxx		xxxxx		1259	xxxx		xxxxx		xxxx		xxxx		xxxxx	290		253		770
Volume/Cap:	xxxx	xxxx		xxxx		0.10	xxxx		xxxx		xxxx		xxxx		xxxx	0.31		0.00		0.13
Level Of Service Module:																				
2Way95thQ:	xxxx	xxxx		xxxxx		0.3	xxxx		xxxxx		xxxx		xxxx		xxxxx	xxxx		xxxx		xxxxx
Control Del:	xxxxx	xxxx		xxxxx		8.2	xxxx		xxxxx		xxxxx		xxxx		xxxxx	xxxxx		xxxx		xxxxx
LOS by Move:	*	*		*		A	*		*		*		*		*	*		*		*
Movement:	LT	-	LTR	-	RT	LT	-	LTR	-	RT	LT	-	LTR	-	RT	LT	-	LTR	-	RT
Shared Cap.:	xxxx	xxxx		xxxxx		xxxx	xxxx		xxxxx		xxxx		xxxx		xxxxx	xxxx		435		xxxxx
SharedQueue:	xxxxx	xxxx		xxxxx		0.3	xxxx		xxxxx		xxxxx		xxxx		xxxxx	xxxxx		2.2		xxxxx
Shrd ConDel:	xxxxx	xxxx		xxxxx		8.2	xxxx		xxxxx		xxxxx		xxxx		xxxxx	xxxxx		19.7		xxxxx
Shared LOS:	*	*		*		A	*		*		*		*		*	*		C		*
ApproachDel:	xxxxxx					xxxxxx					xxxxxx					19.7				
ApproachLOS:	*					*					*					C				

Note: Queue reported is the number of cars per lane.

Church of the Woods
Opening Year (2009) Without Project Traffic Conditions
Saturday Peak Hour

Level Of Service Computation Report
2000 HCM Unsignalized Method (Base Volume Alternative)

Intersection #7 Lake Gregory Drive/State Route 18

Average Delay (sec/veh): 8.9 Worst Case Level Of Service: E[39.6]

Approach:	North Bound			South Bound			East Bound			West Bound		
Movement:	L	T	R	L	T	R	L	T	R	L	T	R
Control:	Stop Sign			Stop Sign			Uncontrolled			Uncontrolled		
Rights:	Include			Include			Include			Include		
Lanes:	0 0 0 0 0			1 0 0 0 1			1 0 1 0 0			0 0 1 0 1		
Volume Module:												
Base Vol:	0	0	0	256	0	92	116	447	0	0	457	152
Growth Adj:	1.00	1.00	1.00	1.00	1.00	1.00	1.00	1.00	1.00	1.00	1.00	1.00
Initial Bse:	0	0	0	256	0	92	116	447	0	0	457	152
User Adj:	1.00	1.00	1.00	1.00	1.00	1.00	1.00	1.00	1.00	1.00	1.00	1.00
PHF Adj:	1.00	1.00	1.00	0.97	0.97	0.97	0.85	0.85	0.85	0.85	0.85	0.85
PHF Volume:	0	0	0	263	0	94	137	527	0	0	535	178
Reduct Vol:	0	0	0	0	0	0	0	0	0	0	0	0
FinalVolume:	0	0	0	263	0	94	137	527	0	0	535	178
Critical Gap Module:												
Critical Gp:	xxxxx	xxxx	xxxxx	6.4	xxxx	6.2	4.1	xxxx	xxxxx	xxxxx	xxxx	xxxxx
FollowUpTim:	xxxxx	xxxx	xxxxx	3.5	xxxx	3.3	2.2	xxxx	xxxxx	xxxxx	xxxx	xxxxx
Capacity Module:												
Cnflict Vol:	xxxx	xxxx	xxxxx	1336	xxxx	535	713	xxxx	xxxxx	xxxx	xxxx	xxxxx
Potent Cap.:	xxxx	xxxx	xxxxx	171	xxxx	549	896	xxxx	xxxxx	xxxx	xxxx	xxxxx
Move Cap.:	xxxx	xxxx	xxxxx	151	xxxx	549	896	xxxx	xxxxx	xxxx	xxxx	xxxxx
Total Cap:	193	234	xxxxx	326	291	xxxxx	xxxx	xxxx	xxxxx	xxxx	xxxx	xxxxx
Volume/Cap:	xxxx	xxxx	xxxx	0.81	xxxx	0.17	0.15	xxxx	xxxx	xxxx	xxxx	xxxx
Level Of Service Module:												
2Way95thQ:	xxxx	xxxx	xxxxx	6.7	xxxx	0.6	0.5	xxxx	xxxxx	xxxx	xxxx	xxxxx
Control Del:	xxxxx	xxxx	xxxxx	49.2	xxxx	12.9	9.7	xxxx	xxxxx	xxxxx	xxxx	xxxxx
LOS by Move:	*	*	*	E	*	B	A	*	*	*	*	*
Movement:	LT	LTR	RT	LT	LTR	RT	LT	LTR	RT	LT	LTR	RT
Shared Cap.:	xxxx	xxxx	xxxxx	xxxx	xxxx	xxxxx	xxxx	xxxx	xxxxx	xxxx	xxxx	xxxxx
SharedQueue:	xxxxx	xxxx	xxxxx	xxxxx	xxxx	xxxxx	xxxxx	xxxx	xxxxx	xxxxx	xxxx	xxxxx
Shrd ConDel:	xxxxx	xxxx	xxxxx	xxxxx	xxxx	xxxxx	xxxxx	xxxx	xxxxx	xxxxx	xxxx	xxxxx
Shared LOS:	*	*	*	*	*	*	*	*	*	*	*	*
ApproachDel:	xxxxxx			39.6			xxxxxx			xxxxxx		
ApproachLOS:	*			E			*			*		

Note: Queue reported is the number of cars per lane.

Church of the Woods
Opening Year (2009) Without Project Traffic Conditions
Saturday Peak Hour

Level Of Service Computation Report
2000 HCM Unsignalized Method (Base Volume Alternative)

Intersection #8 Bear Springs Road/State Route 18

Average Delay (sec/veh): 1.9 Worst Case Level Of Service: D[29.6]

Approach:	North Bound						South Bound						East Bound						West Bound					
Movement:	L	-	T	-	R		L	-	T	-	R		L	-	T	-	R		L	-	T	-	R	
Control:	Stop Sign						Stop Sign						Uncontrolled						Uncontrolled					
Rights:	Include						Include						Include						Include					
Lanes:	0	0	1!	0	0		0	0	1!	0	0		1	0	0	1	0		1	0	0	1	0	
Volume Module:																								
Base Vol:	1	0		4		43	0		32		48	759		1		10	701		27					
Growth Adj:	1.00	1.00		1.00		1.00	1.00		1.00		1.00	1.00		1.00		1.00	1.00		1.00					
Initial Bse:	1	0		4		43	0		32		48	759		1		10	701		27					
User Adj:	1.00	1.00		1.00		1.00	1.00		1.00		1.00	1.00		1.00		1.00	1.00		1.00					
PHF Adj:	0.50	0.50		0.50		0.84	0.84		0.84		0.92	0.92		0.92		0.94	0.94		0.94					
PHF Volume:	2	0		8		51	0		38		52	827		1		11	750		29					
Reduct Vol:	0	0		0		0	0		0		0	0		0		0	0		0					
FinalVolume:	2	0		8		51	0		38		52	827		1		11	750		29					
Critical Gap Module:																								
Critical Gp:	7.1	6.5		6.2		7.1	6.5		6.2		4.1	xxxx		xxxxx		4.1	xxxx		xxxxx					
FollowUpTim:	3.5	4.0		3.3		3.5	4.0		3.3		2.2	xxxx		xxxxx		2.2	xxxx		xxxxx					
Capacity Module:																								
Cnflict Vol:	1737	1732		827		1721	1718		764		779	xxxx		xxxxx		828	xxxx		xxxxx					
Potent Cap.:	69	89		374		71	91		407		847	xxxx		xxxxx		812	xxxx		xxxxx					
Move Cap.:	59	82		374		66	84		407		847	xxxx		xxxxx		812	xxxx		xxxxx					
Total Cap:	161	190		xxxxx		178	199		xxxxx		xxxx	xxxx		xxxxx		xxxx	xxxx		xxxxx					
Volume/Cap:	0.01	0.00		0.02		0.29	0.00		0.09		0.06	xxxx		xxxx		0.01	xxxx		xxxx					
Level Of Service Module:																								
2Way95thQ:	xxxx	xxxx		xxxxx		xxxx	xxxx		xxxxx		0.2	xxxx		xxxxx		0.0	xxxx		xxxxx					
Control Del:	xxxxx	xxxx		xxxxx		xxxxx	xxxx		xxxxx		9.5	xxxx		xxxxx		9.5	xxxx		xxxxx					
LOS by Move:	*	*		*		*	*		*		A	*		*		A	*		*					
Movement:	LT	-	LTR	-	RT		LT	-	LTR	-	RT		LT	-	LTR	-	RT		LT	-	LTR	-	RT	
Shared Cap.:	xxxx	296		xxxxx		xxxx	234		xxxxx		xxxx	xxxx		xxxxx		xxxx	xxxx		xxxxx					
SharedQueue:	xxxxx	0.1		xxxxx		xxxxx	1.7		xxxxx		xxxxx	xxxx		xxxxx		xxxxx	xxxx		xxxxx					
Shrd ConDel:	xxxxx	17.6		xxxxx		xxxxx	29.6		xxxxx		xxxxx	xxxx		xxxxx		xxxxx	xxxx		xxxxx					
Shared LOS:	*	C		*		*	D		*		*	*		*		*	*		*					
ApproachDel:	17.6					29.6					xxxxxx					xxxxxx								
ApproachLOS:	C					D					*					*								

Note: Queue reported is the number of cars per lane.

Church of the Woods
Opening Year (2009) Without Project Traffic Conditions
Saturday Peak Hour

Level Of Service Computation Report
2000 HCM Unsignalized Method (Base Volume Alternative)

Intersection #10 Daley Canyon Road/State Route 18

Average Delay (sec/veh): 6.4 Worst Case Level Of Service: C[18.1]

Approach:	North Bound					South Bound					East Bound					West Bound				
Movement:	L	-	T	-	R	L	-	T	-	R	L	-	T	-	R	L	-	T	-	R
Control:	Stop Sign					Stop Sign					Uncontrolled					Uncontrolled				
Rights:	Include					Include					Include					Include				
Lanes:	0	0	0	0	0	0	0	0	0	1	1	0	1	0	0	0	0	1	0	0
Volume Module:																				
Base Vol:	0	0	0	0	0	0	0	0	0	376	346	478	0	0	0	0	339	0		
Growth Adj:	1.00	1.00	1.00	1.00	1.00	1.00	1.00	1.00	1.00	1.00	1.00	1.00	1.00	1.00	1.00	1.00	1.00	1.00		
Initial Bse:	0	0	0	0	0	0	0	0	0	376	346	478	0	0	0	0	339	0		
User Adj:	1.00	1.00	1.00	1.00	1.00	1.00	1.00	1.00	1.00	1.00	1.00	1.00	1.00	1.00	1.00	1.00	1.00	1.00		
PHF Adj:	1.00	1.00	1.00	1.00	1.00	1.00	1.00	1.00	1.00	0.93	0.94	0.91	1.00	1.00	0.90	1.00				
PHF Volume:	0	0	0	0	0	0	0	0	0	406	368	525	0	0	375	0				
Reduct Vol:	0	0	0	0	0	0	0	0	0	0	0	0	0	0	0	0				
FinalVolume:	0	0	0	0	0	0	0	0	0	406	368	525	0	0	375	0				
Critical Gap Module:																				
Critical Gp:	xxxxx	xxxx	xxxxx	xxxxx	xxxx					6.2	4.1	xxxx	xxxxx	xxxxx	xxxx	xxxxx				
FollowUpTim:	xxxxx	xxxx	xxxxx	xxxxx	xxxx					3.3	2.2	xxxx	xxxxx	xxxxx	xxxx	xxxxx				
Capacity Module:																				
Cnflict Vol:	xxxx	xxxx	xxxxx	xxxx	xxxx					375	375	xxxx	xxxxx	xxxx	xxxx	xxxxx				
Potent Cap.:	xxxx	xxxx	xxxxx	xxxx	xxxx					675	1194	xxxx	xxxxx	xxxx	xxxx	xxxxx				
Move Cap.:	xxxx	xxxx	xxxxx	xxxx	xxxx					675	1194	xxxx	xxxxx	xxxx	xxxx	xxxxx				
Volume/Cap:	xxxx	xxxx	xxxx	xxxx	xxxx					0.60	0.31	xxxx	xxxx	xxxx	xxxx	xxxx				
Level Of Service Module:																				
2Way95thQ:	xxxx	xxxx	xxxxx	xxxx	xxxx					4.0	1.3	xxxx	xxxxx	xxxx	xxxx	xxxxx				
Control Del:	xxxxx	xxxx	xxxxx	xxxxx	xxxx					18.1	9.4	xxxx	xxxxx	xxxxx	xxxx	xxxxx				
LOS by Move:	*	*	*	*	*					C	A	*	*	*	*	*				
Movement:	LT	-	LTR	-	RT	LT	-	LTR	-	RT	LT	-	LTR	-	RT	LT	-	LTR	-	RT
Shared Cap.:	xxxx	xxxx	xxxxx	xxxx	xxxx	xxxxx					xxxx	xxxx	xxxxx	xxxx	xxxx	xxxxx				
SharedQueue:	xxxxx	xxxx	xxxxx	xxxxx	xxxx	xxxxx					xxxxx	xxxx	xxxxx	xxxxx	xxxx	xxxxx				
Shrd ConDel:	xxxxx	xxxx	xxxxx	xxxxx	xxxx	xxxxx					xxxxx	xxxx	xxxxx	xxxxx	xxxx	xxxxx				
Shared LOS:	*	*	*	*	*	*					*	*	*	*	*	*				
ApproachDel:	xxxxxx					18.1					xxxxxx					xxxxxx				
ApproachLOS:	*					C					*					*				

Note: Queue reported is the number of cars per lane.

Church of the Woods
Opening Year (2009) Without Project Traffic Conditions
Saturday Peak Hour

Level Of Service Computation Report
2000 HCM Unsignalized Method (Base Volume Alternative)

Intersection #11 Daley Canyon Road/Daley Canyon Access Road

Average Delay (sec/veh): 3.5 Worst Case Level Of Service: B[12.3]

Approach:	North Bound			South Bound			East Bound			West Bound		
Movement:	L	T	R	L	T	R	L	T	R	L	T	R
Control:	Uncontrolled			Uncontrolled			Stop Sign			Stop Sign		
Rights:	Include			Include			Include			Include		
Lanes:	0 0 1	0	0	0 1	0 0	0	0 0 0	0	0	0 0 0	0	1
Volume Module:												
Base Vol:	0	346	0	171	376	0	0	0	0	0	0	165
Growth Adj:	1.00	1.00	1.00	1.00	1.00	1.00	1.00	1.00	1.00	1.00	1.00	1.00
Initial Bse:	0	346	0	171	376	0	0	0	0	0	0	165
User Adj:	1.00	1.00	1.00	1.00	1.00	1.00	1.00	1.00	1.00	1.00	1.00	1.00
PHF Adj:	1.00	0.94	1.00	0.79	0.93	1.00	1.00	1.00	1.00	1.00	1.00	0.88
PHF Volume:	0	368	0	217	406	0	0	0	0	0	0	187
Reduct Vol:	0	0	0	0	0	0	0	0	0	0	0	0
FinalVolume:	0	368	0	217	406	0	0	0	0	0	0	187
Critical Gap Module:												
Critical Gp:	xxxxx	xxxx	xxxxx	4.1	xxxx	xxxxx	xxxxx	xxxx	xxxxx	xxxxx	xxxx	6.2
FollowUpTim:	xxxxx	xxxx	xxxxx	2.2	xxxx	xxxxx	xxxxx	xxxx	xxxxx	xxxxx	xxxx	3.3
Capacity Module:												
Cnflict Vol:	xxxx	xxxx	xxxxx	368	xxxx	xxxxx	xxxx	xxxx	xxxxx	xxxx	xxxx	368
Potent Cap.:	xxxx	xxxx	xxxxx	1202	xxxx	xxxxx	xxxx	xxxx	xxxxx	xxxx	xxxx	682
Move Cap.:	xxxx	xxxx	xxxxx	1202	xxxx	xxxxx	xxxx	xxxx	xxxxx	xxxx	xxxx	682
Volume/Cap:	xxxx	xxxx	xxxx	0.18	xxxx	xxxx	xxxx	xxxx	xxxx	xxxx	xxxx	0.27
Level Of Service Module:												
2Way95thQ:	xxxx	xxxx	xxxxx	0.7	xxxx	xxxxx	xxxx	xxxx	xxxxx	xxxx	xxxx	1.1
Control Del:	xxxxx	xxxx	xxxxx	8.7	xxxx	xxxxx	xxxxx	xxxx	xxxxx	xxxxx	xxxx	12.3
LOS by Move:	*	*	*	A	*	*	*	*	*	*	*	B
Movement:	LT -	LTR -	RT	LT -	LTR -	RT	LT -	LTR -	RT	LT -	LTR -	RT
Shared Cap.:	xxxx	xxxx	xxxxx	xxxx	xxxx	xxxxx	xxxx	xxxx	xxxxx	xxxx	xxxx	xxxxx
SharedQueue:	xxxxx	xxxx	xxxxx	0.7	xxxx	xxxxx	xxxxx	xxxx	xxxxx	xxxxx	xxxx	xxxxx
Shrd ConDel:	xxxxx	xxxx	xxxxx	8.7	xxxx	xxxxx	xxxxx	xxxx	xxxxx	xxxxx	xxxx	xxxxx
Shared LOS:	*	*	*	A	*	*	*	*	*	*	*	*
ApproachDel:	xxxxxx			xxxxxx			xxxxxx			12.3		
ApproachLOS:	*			*			*			B		

Note: Queue reported is the number of cars per lane.

Church of the Woods
Opening Year (2009) Without Project Traffic Conditions
Saturday Peak Hour

Level Of Service Computation Report
2000 HCM Unsignalized Method (Base Volume Alternative)

Intersection #12 Daley Canyon Access Road/State Route 18

Average Delay (sec/veh): 6.5 Worst Case Level Of Service: E[39.3]

Approach:	North Bound					South Bound					East Bound					West Bound				
Movement:	L	-	T	-	R	L	-	T	-	R	L	-	T	-	R	L	-	T	-	R
Control:	Stop Sign					Stop Sign					Uncontrolled					Uncontrolled				
Rights:	Include					Include					Include					Include				
Lanes:	0	0	0	0	0	1	0	0	0	0	0	0	1	0	0	0	0	1	0	1
Volume Module:																				
Base Vol:	0	0	0			171	0	0			0	478	0			0	339	165		
Growth Adj:	1.00	1.00	1.00			1.00	1.00	1.00			1.00	1.00	1.00			1.00	1.00	1.00		
Initial Bse:	0	0	0			171	0	0			0	478	0			0	339	165		
User Adj:	1.00	1.00	1.00			1.00	1.00	1.00			1.00	1.00	1.00			1.00	1.00	1.00		
PHF Adj:	1.00	1.00	1.00			0.79	1.00	1.00			1.00	0.91	1.00			1.00	0.90	0.88		
PHF Volume:	0	0	0			217	0	0			0	525	0			0	375	187		
Reduct Vol:	0	0	0			0	0	0			0	0	0			0	0	0		
FinalVolume:	0	0	0			217	0	0			0	525	0			0	375	187		
Critical Gap Module:																				
Critical Gp:	xxxxx	xxxx	xxxxx			6.4	xxxx	xxxxx			xxxxx	xxxx	xxxxx			xxxxx	xxxx	xxxxx		
FollowUpTim:	xxxxx	xxxx	xxxxx			3.5	xxxx	xxxxx			xxxxx	xxxx	xxxxx			xxxxx	xxxx	xxxxx		
Capacity Module:																				
Cnflict Vol:	xxxx	xxxx	xxxxx			901	xxxx	xxxxx			xxxx	xxxx	xxxxx			xxxx	xxxx	xxxxx		
Potent Cap.:	xxxx	xxxx	xxxxx			311	xxxx	xxxxx			xxxx	xxxx	xxxxx			xxxx	xxxx	xxxxx		
Move Cap.:	xxxx	xxxx	xxxxx			311	xxxx	xxxxx			xxxx	xxxx	xxxxx			xxxx	xxxx	xxxxx		
Volume/Cap:	xxxx	xxxx	xxxx			0.70	xxxx	xxxx			xxxx	xxxx	xxxx			xxxx	xxxx	xxxx		
Level Of Service Module:																				
2Way95thQ:	xxxx	xxxx	xxxxx			4.9	xxxx	xxxxx			xxxx	xxxx	xxxxx			xxxx	xxxx	xxxxx		
Control Del:	xxxxx	xxxx	xxxxx			39.3	xxxx	xxxxx			xxxxx	xxxx	xxxxx			xxxxx	xxxx	xxxxx		
LOS by Move:	*	*	*			E	*	*			*	*	*			*	*	*		
Movement:	LT	-	LTR	-	RT	LT	-	LTR	-	RT	LT	-	LTR	-	RT	LT	-	LTR	-	RT
Shared Cap.:	xxxx	xxxx	xxxxx			xxxx	xxxx	xxxxx			xxxx	xxxx	xxxxx			xxxx	xxxx	xxxxx		
SharedQueue:	xxxxx	xxxx	xxxxx			xxxxx	xxxx	xxxxx			xxxxx	xxxx	xxxxx			xxxxx	xxxx	xxxxx		
Shrd ConDel:	xxxxx	xxxx	xxxxx			xxxxx	xxxx	xxxxx			xxxxx	xxxx	xxxxx			xxxxx	xxxx	xxxxx		
Shared LOS:	*	*	*			*	*	*			*	*	*			*	*	*		
ApproachDel:	xxxxxx					39.3					xxxxxx					xxxxxx				
ApproachLOS:	*					E					*					*				

Note: Queue reported is the number of cars per lane.

Church of the Woods
Opening Year (2009) Without Project Traffic Conditions
Saturday Peak Hour

Level Of Service Computation Report
2000 HCM Unsignalized Method (Base Volume Alternative)

Intersection #13 State Route 173/State Route 18

Average Delay (sec/veh): 24.7 Worst Case Level Of Service: F[102.7]

Approach:	North Bound					South Bound					East Bound					West Bound				
Movement:	L	-	T	-	R	L	-	T	-	R	L	-	T	-	R	L	-	T	-	R
Control:	Stop Sign					Stop Sign					Uncontrolled					Uncontrolled				
Rights:	Include					Include					Include					Include				
Lanes:	0	0	0	0	0	0	0	1!	0	0	1	0	1	0	0	0	0	1	0	1
Volume Module:																				
Base Vol:	0	0	0			89	0	150			259	309	0			0	263	94		
Growth Adj:	1.00	1.00	1.00			1.00	1.00	1.00			1.00	1.00	1.00			1.00	1.00	1.00		
Initial Bse:	0	0	0			89	0	150			259	309	0			0	263	94		
User Adj:	1.00	1.00	1.00			1.00	1.00	1.00			1.00	1.00	1.00			1.00	1.00	1.00		
PHF Adj:	1.00	1.00	1.00			0.79	0.79	0.79			0.82	0.82	0.82			0.94	0.94	0.94		
PHF Volume:	0	0	0			113	0	191			318	379	0			0	280	100		
Reduct Vol:	0	0	0			0	0	0			0	0	0			0	0	0		
FinalVolume:	0	0	0			113	0	191			318	379	0			0	280	100		
Critical Gap Module:																				
Critical Gp:	xxxxx	xxxx	xxxxx			6.4	6.5	6.2			4.1	xxxx	xxxxx			xxxxx	xxxx	xxxxx		
FollowUpTim:	xxxxx	xxxx	xxxxx			3.5	4.0	3.3			2.2	xxxx	xxxxx			xxxxx	xxxx	xxxxx		
Capacity Module:																				
Cnflict Vol:	xxxx	xxxx	xxxxx			1295	1295	280			381	xxxx	xxxxx			xxxx	xxxx	xxxxx		
Potent Cap.:	xxxx	xxxx	xxxxx			181	164	763			1189	xxxx	xxxxx			xxxx	xxxx	xxxxx		
Move Cap.:	xxxx	xxxx	xxxxx			144	120	763			1189	xxxx	xxxxx			xxxx	xxxx	xxxxx		
Volume/Cap:	xxxx	xxxx	xxxx			0.79	0.00	0.25			0.27	xxxx	xxxx			xxxx	xxxx	xxxx		
Level Of Service Module:																				
2Way95thQ:	xxxx	xxxx	xxxxx			xxxx	xxxx	xxxxx			1.1	xxxx	xxxxx			xxxx	xxxx	xxxxx		
Control Del:	xxxxx	xxxx	xxxxx			xxxxx	xxxx	xxxxx			9.1	xxxx	xxxxx			xxxxx	xxxx	xxxxx		
LOS by Move:	*	*	*			*	*	*			A	*	*			*	*	*		
Movement:	LT	-	LTR	-	RT	LT	-	LTR	-	RT	LT	-	LTR	-	RT	LT	-	LTR	-	RT
Shared Cap.:	xxxx	xxxx	xxxxx			xxxx	293	xxxxx			xxxx	xxxx	xxxxx			xxxx	xxxx	xxxxx		
SharedQueue:	xxxxx	xxxx	xxxxx			xxxxx	11.4	xxxxx			xxxxx	xxxx	xxxxx			xxxxx	xxxx	xxxxx		
Shrd ConDel:	xxxxx	xxxx	xxxxx			xxxxx	103	xxxxx			xxxxx	xxxx	xxxxx			xxxxx	xxxx	xxxxx		
Shared LOS:	*	*	*			*	F	*			*	*	*			*	*	*		
ApproachDel:	xxxxxx					102.7					xxxxxx					xxxxxx				
ApproachLOS:	*					F					*					*				

Note: Queue reported is the number of cars per lane.

Church of the Woods
Opening Year (2009) Without Project Traffic Conditions
Sunday Peak Hour

Level Of Service Computation Report
2000 HCM Unsignalized Method (Base Volume Alternative)

Intersection #1 North Road/State Route 189

Average Delay (sec/veh): 4.5 Worst Case Level Of Service: B[12.7]

Approach:	North Bound			South Bound			East Bound			West Bound		
Movement:	L -	T -	R	L -	T -	R	L -	T -	R	L -	T -	R
Control:	Stop Sign			Stop Sign			Uncontrolled			Uncontrolled		
Rights:	Include			Include			Include			Include		
Lanes:	0 0 0	0 0		0 0	1! 0	0	0 1	0 0	0	0 0	0 1	0
Volume Module:												
Base Vol:	0	0	0	91	0	53	37	83	0	0	153	79
Growth Adj:	1.00	1.00	1.00	1.00	1.00	1.00	1.00	1.00	1.00	1.00	1.00	1.00
Initial Bse:	0	0	0	91	0	53	37	83	0	0	153	79
User Adj:	1.00	1.00	1.00	1.00	1.00	1.00	1.00	1.00	1.00	1.00	1.00	1.00
PHF Adj:	1.00	1.00	1.00	0.77	0.77	0.77	0.86	0.86	0.86	0.85	0.85	0.85
PHF Volume:	0	0	0	118	0	69	43	96	0	0	179	93
Reduct Vol:	0	0	0	0	0	0	0	0	0	0	0	0
FinalVolume:	0	0	0	118	0	69	43	96	0	0	179	93
Critical Gap Module:												
Critical Gp:	xxxxx	xxxx	xxxxx	6.4	6.5	6.2	4.1	xxxx	xxxxx	xxxxx	xxxx	xxxxx
FollowUpTim:	xxxxx	xxxx	xxxxx	3.5	4.0	3.3	2.2	xxxx	xxxxx	xxxxx	xxxx	xxxxx
Capacity Module:												
Cnflict Vol:	xxxx	xxxx	xxxxx	408	408	226	272	xxxx	xxxxx	xxxx	xxxx	xxxxx
Potent Cap.:	xxxx	xxxx	xxxxx	603	536	819	1303	xxxx	xxxxx	xxxx	xxxx	xxxxx
Move Cap.:	xxxx	xxxx	xxxxx	588	518	819	1303	xxxx	xxxxx	xxxx	xxxx	xxxxx
Volume/Cap:	xxxx	xxxx	xxxx	0.20	0.00	0.08	0.03	xxxx	xxxx	xxxx	xxxx	xxxx
Level Of Service Module:												
2Way95thQ:	xxxx	xxxx	xxxxx	xxxx	xxxx	xxxxx	0.1	xxxx	xxxxx	xxxx	xxxx	xxxxx
Control Del:	xxxxx	xxxx	xxxxx	xxxxx	xxxx	xxxxx	7.9	xxxx	xxxxx	xxxxx	xxxx	xxxxx
LOS by Move:	*	*	*	*	*	*	A	*	*	*	*	*
Movement:	LT -	LTR -	RT	LT -	LTR -	RT	LT -	LTR -	RT	LT -	LTR -	RT
Shared Cap.:	xxxx	xxxx	xxxxx	xxxx	656	xxxxx	xxxx	xxxx	xxxxx	xxxx	xxxx	xxxxx
SharedQueue:	xxxxx	xxxx	xxxxx	xxxxx	1.2	xxxxx	0.1	xxxx	xxxxx	xxxxx	xxxx	xxxxx
Shrd ConDel:	xxxxx	xxxx	xxxxx	xxxxx	12.7	xxxxx	7.9	xxxx	xxxxx	xxxxx	xxxx	xxxxx
Shared LOS:	*	*	*	*	B	*	A	*	*	*	*	*
ApproachDel:	xxxxxx			12.7			xxxxxx			xxxxxx		
ApproachLOS:	*			B			*			*		

Note: Queue reported is the number of cars per lane.

Church of the Woods
Opening Year (2009) Without Project Traffic Conditions
Sunday Peak Hour

Level Of Service Computation Report
2000 HCM Unsignalized Method (Base Volume Alternative)

Intersection #2 Bear Springs Road/State Route 189

Average Delay (sec/veh): 4.3 Worst Case Level Of Service: B[13.3]

Approach:	North Bound						South Bound						East Bound						West Bound					
Movement:	L	-	T	-	R		L	-	T	-	R		L	-	T	-	R		L	-	T	-	R	
Control:	Stop Sign						Stop Sign						Uncontrolled						Uncontrolled					
Rights:	Include						Include						Include						Include					
Lanes:	0	0	1!	0	0		0	0	1!	0	0		0	0	1!	0	0		0	0	1!	0	0	
Volume Module:																								
Base Vol:	12	14		10			35	11		59			42	147		21			12	185		19		
Growth Adj:	1.00	1.00		1.00			1.00	1.00		1.00			1.00	1.00		1.00			1.00	1.00		1.00		
Initial Bse:	12	14		10			35	11		59			42	147		21			12	185		19		
User Adj:	1.00	1.00		1.00			1.00	1.00		1.00			1.00	1.00		1.00			1.00	1.00		1.00		
PHF Adj:	0.81	0.81		0.81			0.79	0.79		0.79			0.83	0.83		0.83			0.96	0.96		0.96		
PHF Volume:	15	17		12			44	14		75			50	176		25			12	192		20		
Reduct Vol:	0	0		0			0	0		0			0	0		0			0	0		0		
FinalVolume:	15	17		12			44	14		75			50	176		25			12	192		20		
Critical Gap Module:																								
Critical Gp:	7.1	6.5		6.2			7.1	6.5		6.2			4.1	xxxx		xxxxx			4.1	xxxx		xxxxx		
FollowUpTim:	3.5	4.0		3.3			3.5	4.0		3.3			2.2	xxxx		xxxxx			2.2	xxxx		xxxxx		
Capacity Module:																								
Cnflict Vol:	561	526		189			531	529		202			212	xxxx		xxxxx			202	xxxx		xxxxx		
Potent Cap.:	441	460		858			462	458		844			1371	xxxx		xxxxx			1382	xxxx		xxxxx		
Move Cap.:	379	438		858			426	437		844			1371	xxxx		xxxxx			1382	xxxx		xxxxx		
Volume/Cap:	0.04	0.04		0.01			0.10	0.03		0.09			0.04	xxxx		xxxx			0.01	xxxx		xxxx		
Level Of Service Module:																								
2Way95thQ:	xxxx	xxxx		xxxxx			xxxx	xxxx		xxxxx			0.1	xxxx		xxxxx			0.0	xxxx		xxxxx		
Control Del:	xxxxx	xxxx		xxxxx			xxxxx	xxxx		xxxxx			7.7	xxxx		xxxxx			7.6	xxxx		xxxxx		
LOS by Move:	*	*		*			*	*		*			A	*		*			A	*		*		
Movement:	LT	-	LTR	-	RT		LT	-	LTR	-	RT		LT	-	LTR	-	RT		LT	-	LTR	-	RT	
Shared Cap.:	xxxx		478	xxxxx			xxxx		592	xxxxx			xxxx	xxxx		xxxxx			xxxx	xxxx		xxxxx		
SharedQueue:	xxxxx		0.3	xxxxx			xxxxx		0.9	xxxxx			xxxxx	xxxx		xxxxx			xxxxx	xxxx		xxxxx		
Shrd ConDel:	xxxxx		13.3	xxxxx			xxxxx		12.8	xxxxx			xxxxx	xxxx		xxxxx			xxxxx	xxxx		xxxxx		
Shared LOS:	*		B	*			*		B	*			*	*		*			*	*		*		
ApproachDel:			13.3						12.8					xxxxxx						xxxxxx				
ApproachLOS:			B						B					*						*				

Note: Queue reported is the number of cars per lane.

Church of the Woods
Opening Year (2009) Without Project Traffic Conditions
Sunday Peak Hour

Level Of Service Computation Report
2000 HCM Unsignalized Method (Base Volume Alternative)

Intersection #3 Grass Valley Road/State Route 189

Average Delay (sec/veh): 16.6 Worst Case Level Of Service: D[29.6]

Approach:	North Bound			South Bound			East Bound			West Bound		
Movement:	L	T	R	L	T	R	L	T	R	L	T	R
Control:	Stop Sign			Stop Sign			Uncontrolled			Uncontrolled		
Rights:	Include			Include			Include			Include		
Lanes:	0 0 0 0 0			0 0 1! 0 0			1 0 1 0 0			0 0 0 1 0		
Volume Module:												
Base Vol:	0	0	0	322	0	170	70	160	0	0	54	120
Growth Adj:	1.00	1.00	1.00	1.00	1.00	1.00	1.00	1.00	1.00	1.00	1.00	1.00
Initial Bse:	0	0	0	322	0	170	70	160	0	0	54	120
User Adj:	1.00	1.00	1.00	1.00	1.00	1.00	1.00	1.00	1.00	1.00	1.00	1.00
PHF Adj:	1.00	1.00	1.00	0.90	0.90	0.90	0.91	0.91	0.91	0.83	0.83	0.83
PHF Volume:	0	0	0	358	0	189	77	176	0	0	65	145
Reduct Vol:	0	0	0	0	0	0	0	0	0	0	0	0
FinalVolume:	0	0	0	358	0	189	77	176	0	0	65	145
Critical Gap Module:												
Critical Gp:	xxxxx	xxxx	xxxxx	6.4	6.5	6.2	4.1	xxxx	xxxxx	xxxxx	xxxx	xxxxx
FollowUpTim:	xxxxx	xxxx	xxxxx	3.5	4.0	3.3	2.2	xxxx	xxxxx	xxxxx	xxxx	xxxxx
Capacity Module:												
Cnflict Vol:	xxxx	xxxx	xxxxx	467	467	138	211	xxxx	xxxxx	xxxx	xxxx	xxxxx
Potent Cap.:	xxxx	xxxx	xxxxx	558	496	916	1372	xxxx	xxxxx	xxxx	xxxx	xxxxx
Move Cap.:	xxxx	xxxx	xxxxx	534	468	916	1372	xxxx	xxxxx	xxxx	xxxx	xxxxx
Total Cap:	418	483	xxxxx	588	518	xxxxx	xxxx	xxxx	xxxxx	xxxx	xxxx	xxxxx
Volume/Cap:	xxxx	xxxx	xxxx	0.61	0.00	0.21	0.06	xxxx	xxxx	xxxx	xxxx	xxxx
Level Of Service Module:												
2Way95thQ:	xxxx	xxxx	xxxxx	xxxx	xxxx	xxxxx	0.2	xxxx	xxxxx	xxxx	xxxx	xxxxx
Control Del:	xxxxx	xxxx	xxxxx	xxxxx	xxxx	xxxxx	7.8	xxxx	xxxxx	xxxxx	xxxx	xxxxx
LOS by Move:	*	*	*	*	*	*	A	*	*	*	*	*
Movement:	LT	LTR	RT	LT	LTR	RT	LT	LTR	RT	LT	LTR	RT
Shared Cap.:	xxxx	xxxx	xxxxx	xxxx	671	xxxxx	xxxx	xxxx	xxxxx	xxxx	xxxx	xxxxx
SharedQueue:	xxxxx	xxxx	xxxxx	xxxxx	8.5	xxxxx	xxxxx	xxxx	xxxxx	xxxxx	xxxx	xxxxx
Shrd ConDel:	xxxxx	xxxx	xxxxx	xxxxx	29.6	xxxxx	xxxxx	xxxx	xxxxx	xxxxx	xxxx	xxxxx
Shared LOS:	*	*	*	*	D	*	*	*	*	*	*	*
ApproachDel:	xxxxxx				29.6		xxxxxx			xxxxxx		
ApproachLOS:	*				D		*			*		

Note: Queue reported is the number of cars per lane.

Church of the Woods
Opening Year (2009) Without Project Traffic Conditions
Sunday Peak Hour

Level Of Service Computation Report
2000 HCM 4-Way Stop Method (Base Volume Alternative)

Intersection #4 Daley Canyon Road/State Route 189

Cycle (sec): 100 | Critical Vol./Cap.(X): 0.749
Loss Time (sec): 0 (Y+R=4.0 sec) | Average Delay (sec/veh): 18.2
Optimal Cycle: 0 | Level Of Service: C

Approach:	North Bound				South Bound				East Bound				West Bound			
Movement:	L	- T	- R		L	- T	- R		L	- T	- R		L	- T	- R	
Control:	Stop Sign				Stop Sign				Stop Sign				Stop Sign			
Rights:	Include				Include				Include				Include			
Min. Green:	10	10	10		10	10	10		10	10	10		10	10	10	
Lanes:	0 1	0 0	0		0 0	0 1	0		0 0	1! 0	0		0 0	0 0	0	
Volume Module:																
Base Vol:	120	162	0	0	276	40	187	0	278	0	0	0				
Growth Adj:	1.00	1.00	1.00	1.00	1.00	1.00	1.00	1.00	1.00	1.00	1.00	1.00				
Initial Bse:	120	162	0	0	276	40	187	0	278	0	0	0				
User Adj:	1.00	1.00	1.00	1.00	1.00	1.00	1.00	1.00	1.00	1.00	1.00	1.00				
PHF Adj:	0.86	0.86	0.86	0.87	0.87	0.87	0.96	0.96	0.96	1.00	1.00	1.00				
PHF Volume:	140	189	0	0	319	46	195	0	289	0	0	0				
Reduct Vol:	0	0	0	0	0	0	0	0	0	0	0	0				
Reduced Vol:	140	189	0	0	319	46	195	0	289	0	0	0				
PCE Adj:	1.00	1.00	1.00	1.00	1.00	1.00	1.00	1.00	1.00	1.00	1.00	1.00				
MLF Adj:	1.00	1.00	1.00	1.00	1.00	1.00	1.00	1.00	1.00	1.00	1.00	1.00				
FinalVolume:	140	189	0	0	319	46	195	0	289	0	0	0				
Saturation Flow Module:																
Adjustment:	1.00	1.00	1.00	1.00	1.00	1.00	1.00	1.00	1.00	1.00	1.00	1.00				
Lanes:	0.43	0.57	0.00	0.00	0.87	0.13	0.40	0.00	0.60	0.00	0.00	0.00				
Final Sat.:	248	335	0	0	529	77	260	0	386	0	0	0				
Capacity Analysis Module:																
Vol/Sat:	0.56	0.56	xxxx	xxxx	0.60	0.60	0.75	xxxx	0.75	xxxx	xxxx	xxxx				
Crit Moves:		****			****		****									
Delay/Veh:	15.6	15.6	0.0	0.0	16.3	16.3	21.4	0.0	21.4	0.0	0.0	0.0				
Delay Adj:	1.00	1.00	1.00	1.00	1.00	1.00	1.00	1.00	1.00	1.00	1.00	1.00				
AdjDel/Veh:	15.6	15.6	0.0	0.0	16.3	16.3	21.4	0.0	21.4	0.0	0.0	0.0				
LOS by Move:	C	C	*	*	C	C	C	*	C	*	*	*				
ApproachDel:	15.6				16.3			21.4			xxxxxx					
Delay Adj:	1.00				1.00			1.00			xxxxx					
ApprAdjDel:	15.6				16.3			21.4			xxxxxx					
LOS by Appr:	C				C			C			*					
AllWayAvgQ:	1.1	1.1	1.1	1.3	1.3	1.3	2.3	2.3	2.3	0.0	0.0	0.0				

Note: Queue reported is the number of cars per lane.

Church of the Woods
Opening Year (2009) Without Project Traffic Conditions
Sunday Peak Hour

Level Of Service Computation Report
2000 HCM 4-Way Stop Method (Base Volume Alternative)

Intersection #5 North Bay Road/State Route 189

Cycle (sec): 100 Critical Vol./Cap.(X): 0.516
Loss Time (sec): 0 (Y+R=4.0 sec) Average Delay (sec/veh): 13.5
Optimal Cycle: 0 Level Of Service: B

Approach:	North Bound				South Bound				East Bound				West Bound			
Movement:	L	- T	- R		L	- T	- R		L	- T	- R		L	- T	- R	
Control:	Stop Sign				Stop Sign				Stop Sign				Stop Sign			
Rights:	Include				Include				Include				Include			
Min. Green:	10	10	10		10	10	10		10	10	10		10	10	10	
Lanes:	0 0	0 0	0		1 0	0 0	1		1 0	1 0	0		0 0	0 1	0	
Volume Module:																
Base Vol:	0	0	0		75	0	244		174	198	0		0	192	82	
Growth Adj:	1.00	1.00	1.00		1.00	1.00	1.00		1.00	1.00	1.00		1.00	1.00	1.00	
Initial Bse:	0	0	0		75	0	244		174	198	0		0	192	82	
User Adj:	1.00	1.00	1.00		1.00	1.00	1.00		1.00	1.00	1.00		1.00	1.00	1.00	
PHF Adj:	1.00	1.00	1.00		0.78	0.78	0.78		0.81	0.81	0.81		0.90	0.90	0.90	
PHF Volume:	0	0	0		97	0	314		216	245	0		0	214	91	
Reduct Vol:	0	0	0		0	0	0		0	0	0		0	0	0	
Reduced Vol:	0	0	0		97	0	314		216	245	0		0	214	91	
PCE Adj:	1.00	1.00	1.00		1.00	1.00	1.00		1.00	1.00	1.00		1.00	1.00	1.00	
MLF Adj:	1.00	1.00	1.00		1.00	1.00	1.00		1.00	1.00	1.00		1.00	1.00	1.00	
FinalVolume:	0	0	0		97	0	314		216	245	0		0	214	91	
Saturation Flow Module:																
Adjustment:	1.00	1.00	1.00		1.00	1.00	1.00		1.00	1.00	1.00		1.00	1.00	1.00	
Lanes:	0.00	0.00	0.00		1.00	0.00	1.00		1.00	1.00	0.00		0.00	0.70	0.30	
Final Sat.:	0	0	0		506	0	609		536	580	0		0	421	180	
Capacity Analysis Module:																
Vol/Sat:	xxxx	xxxx	xxxx		0.19	xxxx	0.52		0.40	0.42	xxxx		xxxx	0.51	0.51	
Crit Moves:							****			****				****		
Delay/Veh:	0.0	0.0	0.0		11.1	0.0	13.9		13.4	12.9	0.0		0.0	14.4	14.4	
Delay Adj:	1.00	1.00	1.00		1.00	1.00	1.00		1.00	1.00	1.00		1.00	1.00	1.00	
AdjDel/Veh:	0.0	0.0	0.0		11.1	0.0	13.9		13.4	12.9	0.0		0.0	14.4	14.4	
LOS by Move:	*	*	*		B	*	B		B	B	*		*	B	B	
ApproachDel:	xxxxxx				13.2				13.2				14.4			
Delay Adj:	xxxxx				1.00				1.00				1.00			
ApprAdjDel:	xxxxxx				13.2				13.2				14.4			
LOS by Appr:	*				B				B				B			
AllWayAvgQ:	0.0	0.0	0.0		0.2	0.0	0.9		0.6	0.7	0.0		0.9	0.9	0.9	

Note: Queue reported is the number of cars per lane.

Church of the Woods
Opening Year (2009) Without Project Traffic Conditions
Sunday Peak Hour

Level Of Service Computation Report
2000 HCM Unsignalized Method (Base Volume Alternative)

Intersection #6 Lake Gregory Road/State Route 189

Average Delay (sec/veh): 9.4 Worst Case Level Of Service: C[21.3]

Approach:	North Bound					South Bound					East Bound					West Bound				
Movement:	L	-	T	-	R	L	-	T	-	R	L	-	T	-	R	L	-	T	-	R
Control:	Uncontrolled					Uncontrolled					Stop Sign					Stop Sign				
Rights:	Include					Include					Include					Include				
Lanes:	0	0	0	1	0	0	1	0	0	0	0	0	0	0	0	0	0	1!	0	0
Volume Module:																				
Base Vol:	0	120		40		65	142		0		0		0		0	154		0		75
Growth Adj:	1.00	1.00		1.00		1.00	1.00		1.00		1.00		1.00		1.00	1.00		1.00		1.00
Initial Bse:	0	120		40		65	142		0		0		0		0	154		0		75
User Adj:	1.00	1.00		1.00		1.00	1.00		1.00		1.00		1.00		1.00	1.00		1.00		1.00
PHF Adj:	0.81	0.81		0.81		0.69	0.69		0.69		1.00		1.00		1.00	0.69		0.69		0.69
PHF Volume:	0	148		49		94	206		0		0		0		0	224		0		109
Reduct Vol:	0	0		0		0	0		0		0		0		0	0		0		0
FinalVolume:	0	148		49		94	206		0		0		0		0	224		0		109
Critical Gap Module:																				
Critical Gp:	xxxxx	xxxx		xxxxx		4.1	xxxx		xxxxx		xxxxx		xxxx		xxxxx	6.4		6.5		6.2
FollowUpTim:	xxxxx	xxxx		xxxxx		2.2	xxxx		xxxxx		xxxxx		xxxx		xxxxx	3.5		4.0		3.3
Capacity Module:																				
Cnflict Vol:	xxxx	xxxx		xxxxx		198	xxxx		xxxxx		xxxx		xxxx		xxxxx	567		567		173
Potent Cap.:	xxxx	xxxx		xxxxx		1387	xxxx		xxxxx		xxxx		xxxx		xxxxx	488		436		876
Move Cap.:	xxxx	xxxx		xxxxx		1387	xxxx		xxxxx		xxxx		xxxx		xxxxx	461		404		876
Volume/Cap:	xxxx	xxxx		xxxx		0.07	xxxx		xxxx		xxxx		xxxx		xxxx	0.49		0.00		0.12
Level Of Service Module:																				
2Way95thQ:	xxxx	xxxx		xxxxx		0.2	xxxx		xxxxx		xxxx		xxxx		xxxxx	xxxx		xxxx		xxxxx
Control Del:	xxxxx	xxxx		xxxxx		7.8	xxxx		xxxxx		xxxxx		xxxx		xxxxx	xxxxx		xxxx		xxxxx
LOS by Move:	*	*		*		A	*		*		*		*		*	*		*		*
Movement:	LT	-	LTR	-	RT	LT	-	LTR	-	RT	LT	-	LTR	-	RT	LT	-	LTR	-	RT
Shared Cap.:	xxxx	xxxx		xxxxx		xxxx	xxxx		xxxxx		xxxx		xxxx		xxxxx	xxxx		546		xxxxx
SharedQueue:	xxxxx	xxxx		xxxxx		0.2	xxxx		xxxxx		xxxxx		xxxx		xxxxx	xxxxx		4.1		xxxxx
Shrd ConDel:	xxxxx	xxxx		xxxxx		7.8	xxxx		xxxxx		xxxxx		xxxx		xxxxx	xxxxx		21.3		xxxxx
Shared LOS:	*	*		*		A	*		*		*		*		*	*		C		*
ApproachDel:	xxxxxx					xxxxxx					xxxxxx					21.3				
ApproachLOS:	*					*					*					C				

Note: Queue reported is the number of cars per lane.

Church of the Woods
Opening Year (2009) Without Project Traffic Conditions
Sunday Peak Hour

Level Of Service Computation Report
2000 HCM Unsignalized Method (Base Volume Alternative)

Intersection #7 Lake Gregory Drive/State Route 18

Average Delay (sec/veh): 4.3 Worst Case Level Of Service: C[16.4]

Approach:	North Bound			South Bound			East Bound			West Bound		
Movement:	L	T	R	L	T	R	L	T	R	L	T	R
Control:	Stop Sign			Stop Sign			Uncontrolled			Uncontrolled		
Rights:	Include			Include			Include			Include		
Lanes:	0 0 0 0 0			1 0 0 0 1			1 0 1 0 0			0 0 1 0 1		
Volume Module:												
Base Vol:	0	0	0	140	0	156	55	263	0	0	499	105
Growth Adj:	1.00	1.00	1.00	1.00	1.00	1.00	1.00	1.00	1.00	1.00	1.00	1.00
Initial Bse:	0	0	0	140	0	156	55	263	0	0	499	105
User Adj:	1.00	1.00	1.00	1.00	1.00	1.00	1.00	1.00	1.00	1.00	1.00	1.00
PHF Adj:	1.00	1.00	1.00	0.89	0.89	0.89	0.92	0.92	0.92	0.84	0.84	0.84
PHF Volume:	0	0	0	157	0	175	60	285	0	0	596	125
Reduct Vol:	0	0	0	0	0	0	0	0	0	0	0	0
FinalVolume:	0	0	0	157	0	175	60	285	0	0	596	125
Critical Gap Module:												
Critical Gp:	xxxxx	xxxx	xxxxx	6.4	xxxx	6.2	4.1	xxxx	xxxxx	xxxxx	xxxx	xxxxx
FollowUpTim:	xxxxx	xxxx	xxxxx	3.5	xxxx	3.3	2.2	xxxx	xxxxx	xxxxx	xxxx	xxxxx
Capacity Module:												
Cnflict Vol:	xxxx	xxxx	xxxxx	1000	xxxx	596	722	xxxx	xxxxx	xxxx	xxxx	xxxxx
Potent Cap.:	xxxx	xxxx	xxxxx	272	xxxx	507	890	xxxx	xxxxx	xxxx	xxxx	xxxxx
Move Cap.:	xxxx	xxxx	xxxxx	258	xxxx	507	890	xxxx	xxxxx	xxxx	xxxx	xxxxx
Total Cap:	194	332	xxxxx	453	404	xxxxx	xxxx	xxxx	xxxxx	xxxx	xxxx	xxxxx
Volume/Cap:	xxxx	xxxx	xxxx	0.35	xxxx	0.35	0.07	xxxx	xxxx	xxxx	xxxx	xxxx
Level Of Service Module:												
2Way95thQ:	xxxx	xxxx	xxxxx	1.5	xxxx	1.5	0.2	xxxx	xxxxx	xxxx	xxxx	xxxxx
Control Del:	xxxxx	xxxx	xxxxx	17.1	xxxx	15.8	9.3	xxxx	xxxxx	xxxxx	xxxx	xxxxx
LOS by Move:	*	*	*	C	*	C	A	*	*	*	*	*
Movement:	LT	LTR	RT	LT	LTR	RT	LT	LTR	RT	LT	LTR	RT
Shared Cap.:	xxxx	xxxx	xxxxx	xxxx	xxxx	xxxxx	xxxx	xxxx	xxxxx	xxxx	xxxx	xxxxx
SharedQueue:	xxxxx	xxxx	xxxxx	xxxxx	xxxx	xxxxx	xxxxx	xxxx	xxxxx	xxxxx	xxxx	xxxxx
Shrd ConDel:	xxxxx	xxxx	xxxxx	xxxxx	xxxx	xxxxx	xxxxx	xxxx	xxxxx	xxxxx	xxxx	xxxxx
Shared LOS:	*	*	*	*	*	*	*	*	*	*	*	*
ApproachDel:	xxxxxx			16.4			xxxxxx			xxxxxx		
ApproachLOS:	*			C			*			*		

Note: Queue reported is the number of cars per lane.

Church of the Woods
Opening Year (2009) Without Project Traffic Conditions
Sunday Peak Hour

Level Of Service Computation Report
2000 HCM Unsignalized Method (Base Volume Alternative)

Intersection #8 Bear Springs Road/State Route 18

Average Delay (sec/veh): 2.3 Worst Case Level Of Service: C[20.0]

Approach:	North Bound						South Bound						East Bound						West Bound					
Movement:	L	-	T	-	R		L	-	T	-	R		L	-	T	-	R		L	-	T	-	R	
Control:	Stop Sign						Stop Sign						Uncontrolled						Uncontrolled					
Rights:	Include						Include						Include						Include					
Lanes:	0	0	1!	0	0		0	0	1!	0	0		1	0	0	1	0		1	0	0	1	0	
Volume Module:																								
Base Vol:	16		0		16		14		3		20		17		508		14		11		554		15	
Growth Adj:	1.00	1.00		1.00		1.00		1.00		1.00		1.00	1.00	1.00		1.00		1.00	1.00	1.00		1.00		1.00
Initial Bse:	16		0		16		14		3		20		17		508		14		11		554		15	
User Adj:	1.00	1.00		1.00		1.00		1.00		1.00		1.00	1.00	1.00		1.00		1.00	1.00	1.00		1.00		1.00
PHF Adj:	0.50	0.50		0.50		0.40		0.40		0.40		0.89	0.89		0.89		0.83	0.83		0.83				
PHF Volume:	32		0		32		35		8		50		19		571		16		13		667		18	
Reduct Vol:	0		0		0		0		0		0		0		0		0		0		0		0	
FinalVolume:	32		0		32		35		8		50		19		571		16		13		667		18	
Critical Gap Module:																								
Critical Gp:	7.1	6.5		6.2		7.1	6.5		6.2			4.1	xxxx	xxxxx			4.1	xxxx	xxxxx					
FollowUpTim:	3.5	4.0		3.3		3.5	4.0		3.3			2.2	xxxx	xxxxx			2.2	xxxx	xxxxx					
Capacity Module:																								
Cnflict Vol:	1348	1328		579		1335	1327		676			685	xxxx	xxxxx			587	xxxx	xxxxx					
Potent Cap.:	129	157		519		132	157		457			918	xxxx	xxxxx			998	xxxx	xxxxx					
Move Cap.:	108	151		519		121	151		457			918	xxxx	xxxxx			998	xxxx	xxxxx					
Total Cap:	228	270		xxxxx		248	273		xxxxx			xxxx	xxxx	xxxxx			xxxx	xxxx	xxxxx					
Volume/Cap:	0.14	0.00		0.06		0.14	0.03		0.11			0.02	xxxx		xxxx		0.01	xxxx		xxxx				
Level Of Service Module:																								
2Way95thQ:	xxxx	xxxx		xxxxx		xxxx	xxxx		xxxxx			0.1	xxxx	xxxxx			0.0	xxxx	xxxxx					
Control Del:	xxxxx	xxxx		xxxxx		xxxxx	xxxx		xxxxx			9.0	xxxx	xxxxx			8.7	xxxx	xxxxx					
LOS by Move:	*	*		*		*	*		*			A	*		*		A	*		*				
Movement:	LT	-	LTR	-	RT		LT	-	LTR	-	RT		LT	-	LTR	-	RT		LT	-	LTR	-	RT	
Shared Cap.:	xxxx		317		xxxxx		xxxx		333		xxxxx		xxxx	xxxx	xxxxx			xxxx	xxxx	xxxxx				
SharedQueue:	xxxxx		0.7		xxxxx		xxxxx		1.1		xxxxx		xxxxx	xxxx	xxxxx			xxxxx	xxxx	xxxxx				
Shrd ConDel:	xxxxx		19.2		xxxxx		xxxxx		20.0		xxxxx		xxxxx	xxxx	xxxxx			xxxxx	xxxx	xxxxx				
Shared LOS:	*		C		*		*		C		*		*	*			*		*	*				
ApproachDel:	19.2						20.0						xxxxxx						xxxxxx					
ApproachLOS:	C						C						*						*					

Note: Queue reported is the number of cars per lane.

Church of the Woods
Opening Year (2009) Without Project Traffic Conditions
Sunday Peak Hour

Level Of Service Computation Report
2000 HCM Unsignalized Method (Base Volume Alternative)

Intersection #10 Daley Canyon Road/State Route 18

Average Delay (sec/veh): 8.9 Worst Case Level Of Service: C[20.9]

Approach:	North Bound					South Bound					East Bound					West Bound				
Movement:	L	-	T	-	R	L	-	T	-	R	L	-	T	-	R	L	-	T	-	R
Control:	Stop Sign					Stop Sign					Uncontrolled					Uncontrolled				
Rights:	Include					Include					Include					Include				
Lanes:	0	0	0	0	0	0	0	0	0	1	1	0	1	0	0	0	0	1	0	0
Volume Module:																				
Base Vol:	0	0	0	0	0	373	204	269	0	0	300	0								
Growth Adj:	1.00	1.00	1.00	1.00	1.00	1.00	1.00	1.00	1.00	1.00	1.00	1.00								
Initial Bse:	0	0	0	0	0	373	204	269	0	0	300	0								
User Adj:	1.00	1.00	1.00	1.00	1.00	1.00	1.00	1.00	1.00	1.00	1.00	1.00								
PHF Adj:	1.00	1.00	1.00	1.00	1.00	0.76	0.86	0.85	1.00	1.00	0.89	1.00								
PHF Volume:	0	0	0	0	0	493	238	316	0	0	339	0								
Reduct Vol:	0	0	0	0	0	0	0	0	0	0	0	0								
FinalVolume:	0	0	0	0	0	493	238	316	0	0	339	0								
Critical Gap Module:																				
Critical Gp:	xxxxx	xxxx	xxxxx	xxxxx	xxxx	6.2	4.1	xxxx	xxxxx	xxxxx	xxxx	xxxxx								
FollowUpTim:	xxxxx	xxxx	xxxxx	xxxxx	xxxx	3.3	2.2	xxxx	xxxxx	xxxxx	xxxx	xxxxx								
Capacity Module:																				
Cnflict Vol:	xxxx	xxxx	xxxxx	xxxx	xxxx	339	339	xxxx	xxxxx	xxxx	xxxx	xxxxx								
Potent Cap.:	xxxx	xxxx	xxxxx	xxxx	xxxx	708	1232	xxxx	xxxxx	xxxx	xxxx	xxxxx								
Move Cap.:	xxxx	xxxx	xxxxx	xxxx	xxxx	708	1232	xxxx	xxxxx	xxxx	xxxx	xxxxx								
Volume/Cap:	xxxx	xxxx	xxxx	xxxx	xxxx	0.70	0.19	xxxx	xxxx	xxxx	xxxx	xxxx								
Level Of Service Module:																				
2Way95thQ:	xxxx	xxxx	xxxxx	xxxx	xxxx	5.7	0.7	xxxx	xxxxx	xxxx	xxxx	xxxxx								
Control Del:	xxxxx	xxxx	xxxxx	xxxxx	xxxx	20.9	8.6	xxxx	xxxxx	xxxxx	xxxx	xxxxx								
LOS by Move:	*	*	*	*	*	C	A	*	*	*	*	*								
Movement:	LT	-	LTR	-	RT	LT	-	LTR	-	RT	LT	-	LTR	-	RT	LT	-	LTR	-	RT
Shared Cap.:	xxxx	xxxx	xxxxx	xxxx	xxxx	xxxxx	xxxx	xxxx	xxxxx	xxxx	xxxx	xxxxx								
SharedQueue:	xxxxx	xxxx	xxxxx	xxxxx	xxxx	xxxxx	xxxxx	xxxx	xxxxx	xxxxx	xxxx	xxxxx								
Shrd ConDel:	xxxxx	xxxx	xxxxx	xxxxx	xxxx	xxxxx	xxxxx	xxxx	xxxxx	xxxxx	xxxx	xxxxx								
Shared LOS:	*	*	*	*	*	*	*	*	*	*	*	*								
ApproachDel:	xxxxxx			20.9			xxxxxx				xxxxxx									
ApproachLOS:	*			C			*				*									

Note: Queue reported is the number of cars per lane.

Church of the Woods
Opening Year (2009) Without Project Traffic Conditions
Sunday Peak Hour

Level Of Service Computation Report
2000 HCM Unsignalized Method (Base Volume Alternative)

Intersection #11 Daley Canyon Road/Daley Canyon Access Road

Average Delay (sec/veh): 4.6 Worst Case Level Of Service: B[12.0]

Approach:	North Bound					South Bound					East Bound					West Bound				
Movement:	L	-	T	-	R	L	-	T	-	R	L	-	T	-	R	L	-	T	-	R
Control:	Uncontrolled					Uncontrolled					Stop Sign					Stop Sign				
Rights:	Include					Include					Include					Include				
Lanes:	0	0	1	0	0	0	1	0	0	0	0	0	0	0	0	0	0	0	0	1
Volume Module:																				
Base Vol:	0	204		0		186	373		0		0		0		0	0		0		149
Growth Adj:	1.00	1.00		1.00		1.00	1.00		1.00		1.00		1.00		1.00	1.00		1.00		1.00
Initial Bse:	0	204		0		186	373		0		0		0		0	0		0		149
User Adj:	1.00	1.00		1.00		1.00	1.00		1.00		1.00		1.00		1.00	1.00		1.00		1.00
PHF Adj:	1.00	0.86		1.00		0.60	0.76		1.00		1.00		1.00		1.00	1.00		1.00		0.52
PHF Volume:	0	238		0		308	493		0		0		0		0	0		0		289
Reduct Vol:	0	0		0		0	0		0		0		0		0	0		0		0
FinalVolume:	0	238		0		308	493		0		0		0		0	0		0		289
Critical Gap Module:																				
Critical Gp:	xxxxx	xxxx		xxxxx		4.1	xxxx		xxxxx		xxxxx		xxxx		xxxxx	xxxxx		xxxx		6.2
FollowUpTim:	xxxxx	xxxx		xxxxx		2.2	xxxx		xxxxx		xxxxx		xxxx		xxxxx	xxxxx		xxxx		3.3
Capacity Module:																				
Cnflict Vol:	xxxx	xxxx		xxxxx		238	xxxx		xxxxx		xxxx		xxxx		xxxxx	xxxx		xxxx		238
Potent Cap.:	xxxx	xxxx		xxxxx		1340	xxxx		xxxxx		xxxx		xxxx		xxxxx	xxxx		xxxx		806
Move Cap.:	xxxx	xxxx		xxxxx		1340	xxxx		xxxxx		xxxx		xxxx		xxxxx	xxxx		xxxx		806
Volume/Cap:	xxxx	xxxx		xxxx		0.23	xxxx		xxxx		xxxx		xxxx		xxxx	xxxx		xxxx		0.36
Level Of Service Module:																				
2Way95thQ:	xxxx	xxxx		xxxxx		0.9	xxxx		xxxxx		xxxx		xxxx		xxxxx	xxxx		xxxx		1.6
Control Del:	xxxxx	xxxx		xxxxx		8.5	xxxx		xxxxx		xxxxx		xxxx		xxxxx	xxxxx		xxxx		12.0
LOS by Move:	*	*		*		A	*		*		*		*		*	*		*		B
Movement:	LT	-	LTR	-	RT	LT	-	LTR	-	RT	LT	-	LTR	-	RT	LT	-	LTR	-	RT
Shared Cap.:	xxxx	xxxx		xxxxx		xxxx	xxxx		xxxxx		xxxx		xxxx		xxxxx	xxxx		xxxx		xxxxx
SharedQueue:	xxxxx	xxxx		xxxxx		0.9	xxxx		xxxxx		xxxxx		xxxx		xxxxx	xxxxx		xxxx		xxxxx
Shrd ConDel:	xxxxx	xxxx		xxxxx		8.5	xxxx		xxxxx		xxxxx		xxxx		xxxxx	xxxxx		xxxx		xxxxx
Shared LOS:	*	*		*		A	*		*		*		*		*	*		*		*
ApproachDel:	xxxxxx					xxxxxx					xxxxxx					12.0				
ApproachLOS:	*					*					*					B				

Note: Queue reported is the number of cars per lane.

Church of the Woods
Opening Year (2009) Without Project Traffic Conditions
Sunday Peak Hour

Level Of Service Computation Report
2000 HCM Unsignalized Method (Base Volume Alternative)

Intersection #12 Daley Canyon Access Road/State Route 18

Average Delay (sec/veh): 7.7 Worst Case Level Of Service: D[31.2]

Approach:	North Bound					South Bound					East Bound					West Bound				
Movement:	L	-	T	-	R	L	-	T	-	R	L	-	T	-	R	L	-	T	-	R
Control:	Stop Sign					Stop Sign					Uncontrolled					Uncontrolled				
Rights:	Include					Include					Include					Include				
Lanes:	0	0	0	0	0	1	0	0	0	0	0	0	1	0	0	0	0	1	0	1
Volume Module:																				
Base Vol:	0	0	0			186	0	0			0	269	0			0	300	149		
Growth Adj:	1.00	1.00	1.00			1.00	1.00	1.00			1.00	1.00	1.00			1.00	1.00	1.00		
Initial Bse:	0	0	0			186	0	0			0	269	0			0	300	149		
User Adj:	1.00	1.00	1.00			1.00	1.00	1.00			1.00	1.00	1.00			1.00	1.00	1.00		
PHF Adj:	1.00	1.00	1.00			0.60	1.00	1.00			1.00	0.85	1.00			1.00	0.89	0.52		
PHF Volume:	0	0	0			308	0	0			0	316	0			0	339	289		
Reduct Vol:	0	0	0			0	0	0			0	0	0			0	0	0		
FinalVolume:	0	0	0			308	0	0			0	316	0			0	339	289		
Critical Gap Module:																				
Critical Gp:	xxxxx	xxxx	xxxxx			6.4	xxxx	xxxxx			xxxxx	xxxx	xxxxx			xxxxx	xxxx	xxxxx		
FollowUpTim:	xxxxx	xxxx	xxxxx			3.5	xxxx	xxxxx			xxxxx	xxxx	xxxxx			xxxxx	xxxx	xxxxx		
Capacity Module:																				
Cnflict Vol:	xxxx	xxxx	xxxxx			655	xxxx	xxxxx			xxxx	xxxx	xxxxx			xxxx	xxxx	xxxxx		
Potent Cap.:	xxxx	xxxx	xxxxx			434	xxxx	xxxxx			xxxx	xxxx	xxxxx			xxxx	xxxx	xxxxx		
Move Cap.:	xxxx	xxxx	xxxxx			434	xxxx	xxxxx			xxxx	xxxx	xxxxx			xxxx	xxxx	xxxxx		
Volume/Cap:	xxxx	xxxx	xxxx			0.71	xxxx	xxxx			xxxx	xxxx	xxxx			xxxx	xxxx	xxxx		
Level Of Service Module:																				
2Way95thQ:	xxxx	xxxx	xxxxx			5.5	xxxx	xxxxx			xxxx	xxxx	xxxxx			xxxx	xxxx	xxxxx		
Control Del:	xxxxx	xxxx	xxxxx			31.2	xxxx	xxxxx			xxxxx	xxxx	xxxxx			xxxxx	xxxx	xxxxx		
LOS by Move:	*	*	*			D	*	*			*	*	*			*	*	*		
Movement:	LT	-	LTR	-	RT	LT	-	LTR	-	RT	LT	-	LTR	-	RT	LT	-	LTR	-	RT
Shared Cap.:	xxxx	xxxx	xxxxx			xxxx	xxxx	xxxxx			xxxx	xxxx	xxxxx			xxxx	xxxx	xxxxx		
SharedQueue:	xxxxx	xxxx	xxxxx			xxxxx	xxxx	xxxxx			xxxxx	xxxx	xxxxx			xxxxx	xxxx	xxxxx		
Shrd ConDel:	xxxxx	xxxx	xxxxx			xxxxx	xxxx	xxxxx			xxxxx	xxxx	xxxxx			xxxxx	xxxx	xxxxx		
Shared LOS:	*	*	*			*	*	*			*	*	*			*	*	*		
ApproachDel:	xxxxxx					31.2					xxxxxx					xxxxxx				
ApproachLOS:	*					D					*					*				

Note: Queue reported is the number of cars per lane.

Church of the Woods
Opening Year (2009) Without Project Traffic Conditions
Sunday Peak Hour

Level Of Service Computation Report
2000 HCM Unsignalized Method (Base Volume Alternative)

Intersection #13 State Route 173/State Route 18

Average Delay (sec/veh): 6.2 Worst Case Level Of Service: C[18.1]

Approach:	North Bound					South Bound					East Bound					West Bound				
Movement:	L	-	T	-	R	L	-	T	-	R	L	-	T	-	R	L	-	T	-	R
Control:	Stop Sign					Stop Sign					Uncontrolled					Uncontrolled				
Rights:	Include					Include					Include					Include				
Lanes:	0	0	0	0	0	0	0	1!	0	0	1	0	1	0	0	0	0	1	0	1
Volume Module:																				
Base Vol:	0	0	0	47	0	145	227	170	0	0	174	123								
Growth Adj:	1.00	1.00	1.00	1.00	1.00	1.00	1.00	1.00	1.00	1.00	1.00	1.00								
Initial Bse:	0	0	0	47	0	145	227	170	0	0	174	123								
User Adj:	1.00	1.00	1.00	1.00	1.00	1.00	1.00	1.00	1.00	1.00	1.00	1.00								
PHF Adj:	1.00	1.00	1.00	0.82	0.82	0.82	0.80	0.80	0.80	0.85	0.85	0.85								
PHF Volume:	0	0	0	57	0	176	284	213	0	0	205	145								
Reduct Vol:	0	0	0	0	0	0	0	0	0	0	0	0								
FinalVolume:	0	0	0	57	0	176	284	213	0	0	205	145								
Critical Gap Module:																				
Critical Gp:	xxxxx	xxxx	xxxxx	6.4	6.5	6.2	4.1	xxxx	xxxxx	xxxxx	xxxx	xxxxx								
FollowUpTim:	xxxxx	xxxx	xxxxx	3.5	4.0	3.3	2.2	xxxx	xxxxx	xxxxx	xxxx	xxxxx								
Capacity Module:																				
Cnflict Vol:	xxxx	xxxx	xxxxx	987	987	205	350	xxxx	xxxxx	xxxx	xxxx	xxxxx								
Potent Cap.:	xxxx	xxxx	xxxxx	277	249	840	1220	xxxx	xxxxx	xxxx	xxxx	xxxxx								
Move Cap.:	xxxx	xxxx	xxxxx	227	191	840	1220	xxxx	xxxxx	xxxx	xxxx	xxxxx								
Volume/Cap:	xxxx	xxxx	xxxx	0.25	0.00	0.21	0.23	xxxx	xxxx	xxxx	xxxx	xxxx								
Level Of Service Module:																				
2Way95thQ:	xxxx	xxxx	xxxxx	xxxx	xxxx	xxxxx	0.9	xxxx	xxxxx	xxxx	xxxx	xxxxx								
Control Del:	xxxxx	xxxx	xxxxx	xxxxx	xxxx	xxxxx	8.8	xxxx	xxxxx	xxxxx	xxxx	xxxxx								
LOS by Move:	*	*	*	*	*	*	A	*	*	*	*	*								
Movement:	LT	-	LTR	-	RT	LT	-	LTR	-	RT	LT	-	LTR	-	RT	LT	-	LTR	-	RT
Shared Cap.:	xxxx	xxxx	xxxxx	xxxx	506	xxxxx	xxxx	xxxx	xxxxx	xxxx	xxxx	xxxxx								
SharedQueue:	xxxxx	xxxx	xxxxx	xxxxx	2.4	xxxxx	xxxxx	xxxx	xxxxx	xxxxx	xxxx	xxxxx								
Shrd ConDel:	xxxxx	xxxx	xxxxx	xxxxx	18.1	xxxxx	xxxxx	xxxx	xxxxx	xxxxx	xxxx	xxxxx								
Shared LOS:	*	*	*	*	C	*	*	*	*	*	*	*								
ApproachDel:	xxxxxx				18.1		xxxxxx				xxxxxx									
ApproachLOS:	*				C		*				*									

Note: Queue reported is the number of cars per lane.

OPENING YEAR (2009) WITH PROJECT CONDITIONS

Church of the Woods
Opening Year (2009) With Project Traffic Conditions
Saturday Peak Hour

Level Of Service Computation Report
2000 HCM Unsignalized Method (Base Volume Alternative)

Intersection #1 North Road/State Route 189

Average Delay (sec/veh): 7.8 Worst Case Level Of Service: C[21.2]

Approach:	North Bound					South Bound					East Bound					West Bound				
Movement:	L	-	T	-	R	L	-	T	-	R	L	-	T	-	R	L	-	T	-	R
Control:	Stop Sign					Stop Sign					Uncontrolled					Uncontrolled				
Rights:	Include					Include					Include					Include				
Lanes:	0	0	0	0	0	0	0	1!	0	0	0	1	0	0	0	0	0	0	1	0
Volume Module:																				
Base Vol:	0	0	0	171	0	52	38	168	0	0	162	143								
Growth Adj:	1.00	1.00	1.00	1.00	1.00	1.00	1.00	1.00	1.00	1.00	1.00	1.00								
Initial Bse:	0	0	0	171	0	52	38	168	0	0	162	143								
User Adj:	1.00	1.00	1.00	1.00	1.00	1.00	1.00	1.00	1.00	1.00	1.00	1.00								
PHF Adj:	1.00	1.00	1.00	0.71	0.71	0.71	0.82	0.82	0.82	0.90	0.90	0.90								
PHF Volume:	0	0	0	241	0	73	46	204	0	0	179	158								
Reduct Vol:	0	0	0	0	0	0	0	0	0	0	0	0								
FinalVolume:	0	0	0	241	0	73	46	204	0	0	179	158								
Critical Gap Module:																				
Critical Gp:	xxxxx	xxxx	xxxxx	6.4	6.5	6.2	4.1	xxxx	xxxxx	xxxxx	xxxx	xxxxx								
FollowUpTim:	xxxxx	xxxx	xxxxx	3.5	4.0	3.3	2.2	xxxx	xxxxx	xxxxx	xxxx	xxxxx								
Capacity Module:																				
Cnflict Vol:	xxxx	xxxx	xxxxx	555	555	259	338	xxxx	xxxxx	xxxx	xxxx	xxxxx								
Potent Cap.:	xxxx	xxxx	xxxxx	496	443	785	1233	xxxx	xxxxx	xxxx	xxxx	xxxxx								
Move Cap.:	xxxx	xxxx	xxxxx	482	426	785	1233	xxxx	xxxxx	xxxx	xxxx	xxxxx								
Volume/Cap:	xxxx	xxxx	xxxx	0.50	0.00	0.09	0.04	xxxx	xxxx	xxxx	xxxx	xxxx								
Level Of Service Module:																				
2Way95thQ:	xxxx	xxxx	xxxxx	xxxx	xxxx	xxxxx	0.1	xxxx	xxxxx	xxxx	xxxx	xxxxx								
Control Del:	xxxxx	xxxx	xxxxx	xxxxx	xxxx	xxxxx	8.0	xxxx	xxxxx	xxxxx	xxxx	xxxxx								
LOS by Move:	*	*	*	*	*	*	A	*	*	*	*	*								
Movement:	LT	-	LTR	-	RT	LT	-	LTR	-	RT	LT	-	LTR	-	RT	LT	-	LTR	-	RT
Shared Cap.:	xxxx	xxxx	xxxxx	xxxx	530	xxxxx	xxxx	xxxx	xxxxx	xxxx	xxxx	xxxxx								
SharedQueue:	xxxxx	xxxx	xxxxx	xxxxx	3.8	xxxxx	0.1	xxxx	xxxxx	xxxxx	xxxx	xxxxx								
Shrd ConDel:	xxxxx	xxxx	xxxxx	xxxxx	21.2	xxxxx	8.0	xxxx	xxxxx	xxxxx	xxxx	xxxxx								
Shared LOS:	*	*	*	*	C	*	A	*	*	*	*	*								
ApproachDel:	xxxxxx				21.2		xxxxxx				xxxxxx									
ApproachLOS:	*				C		*				*									

Note: Queue reported is the number of cars per lane.

Church of the Woods
Opening Year (2009) With Project Traffic Conditions
Saturday Peak Hour

Level Of Service Computation Report
2000 HCM Unsignalized Method (Base Volume Alternative)

Intersection #2 Bear Springs Road/State Route 189

Average Delay (sec/veh): 4.9 Worst Case Level Of Service: C[18.2]

Approach:	North Bound						South Bound						East Bound						West Bound					
Movement:	L	-	T	-	R		L	-	T	-	R		L	-	T	-	R		L	-	T	-	R	
Control:	Stop Sign						Stop Sign						Uncontrolled						Uncontrolled					
Rights:	Include						Include						Include						Include					
Lanes:	0	0	1!	0	0		0	0	1!	0	0		0	0	1!	0	0		0	0	1!	0	0	
Volume Module:																								
Base Vol:	23		14		15		36		11		62		66		221		34		11		219		33	
Growth Adj:	1.00	1.00		1.00		1.00	1.00	1.00		1.00		1.00	1.00	1.00		1.00		1.00	1.00	1.00		1.00		1.00
Initial Bse:	23		14		15		36		11		62		66		221		34		11		219		33	
User Adj:	1.00	1.00		1.00		1.00	1.00	1.00		1.00		1.00	1.00	1.00		1.00		1.00	1.00	1.00		1.00		1.00
PHF Adj:	0.66	0.66		0.66		0.80	0.80	0.80		0.80		0.86	0.86	0.86		0.86		0.91	0.91	0.91		0.91		0.91
PHF Volume:	35		21		23		45		14		78		76		256		39		12		241		36	
Reduct Vol:	0		0		0		0		0		0		0		0		0		0		0		0	
FinalVolume:	35		21		23		45		14		78		76		256		39		12		241		36	
Critical Gap Module:																								
Critical Gp:	7.1		6.5		6.2		7.1		6.5		6.2		4.1	xxxx	xxxxx				4.1	xxxx	xxxxx			
FollowUpTim:	3.5		4.0		3.3		3.5		4.0		3.3		2.2	xxxx	xxxxx				2.2	xxxx	xxxxx			
Capacity Module:																								
Cnflict Vol:	758		730		275		734		732		260		278	xxxx	xxxxx				295	xxxx	xxxxx			
Potent Cap.:	326		351		768		338		351		784		1297	xxxx	xxxxx				1278	xxxx	xxxxx			
Move Cap.:	269		327		768		295		326		784		1297	xxxx	xxxxx				1278	xxxx	xxxxx			
Volume/Cap:	0.13	0.06		0.03		0.15	0.04		0.10			0.06	xxxx		xxxx			0.01	xxxx		xxxx			
Level Of Service Module:																								
2Way95thQ:	xxxx	xxxx	xxxxx				xxxx	xxxx	xxxxx				0.2	xxxx	xxxxx				0.0	xxxx	xxxxx			
Control Del:	xxxxx	xxxx	xxxxx				xxxxx	xxxx	xxxxx				8.0	xxxx	xxxxx				7.8	xxxx	xxxxx			
LOS by Move:	*		*		*		*		*		*		A		*		*		A		*		*	
Movement:	LT	-	LTR	-	RT		LT	-	LTR	-	RT		LT	-	LTR	-	RT		LT	-	LTR	-	RT	
Shared Cap.:	xxxx		352	xxxxx			xxxx		464	xxxxx			xxxx	xxxx	xxxxx				xxxx	xxxx	xxxxx			
SharedQueue:	xxxxx		0.8	xxxxx			xxxxx		1.2	xxxxx			xxxxx	xxxx	xxxxx				xxxxx	xxxx	xxxxx			
Shrd ConDel:	xxxxx		18.2	xxxxx			xxxxx		15.9	xxxxx			xxxxx	xxxx	xxxxx				xxxxx	xxxx	xxxxx			
Shared LOS:	*		C		*		*		C		*		*		*		*		*		*		*	
ApproachDel:			18.2						15.9					xxxxxx						xxxxxx				
ApproachLOS:			C						C						*						*			

Note: Queue reported is the number of cars per lane.

Church of the Woods
Opening Year (2009) With Project Traffic Conditions
Saturday Peak Hour

Level Of Service Computation Report
2000 HCM Unsignalized Method (Base Volume Alternative)

Intersection #3 Grass Valley Road/State Route 189

Average Delay (sec/veh): 122.1 Worst Case Level Of Service: F[243.2]

Approach:	North Bound			South Bound			East Bound			West Bound		
Movement:	L	T	R	L	T	R	L	T	R	L	T	R
Control:	Stop Sign			Stop Sign			Uncontrolled			Uncontrolled		
Rights:	Include			Include			Include			Include		
Lanes:	0 0 0 0 0			0 0 1! 0 0			1 0 1 0 0			0 0 0 1 0		
Volume Module:												
Base Vol:	0	0	0	363	0	250	122	211	0	0	86	190
Growth Adj:	1.00	1.00	1.00	1.00	1.00	1.00	1.00	1.00	1.00	1.00	1.00	1.00
Initial Bse:	0	0	0	363	0	250	122	211	0	0	86	190
User Adj:	1.00	1.00	1.00	1.00	1.00	1.00	1.00	1.00	1.00	1.00	1.00	1.00
PHF Adj:	1.00	1.00	1.00	0.81	0.81	0.81	0.78	0.78	0.78	0.83	0.83	0.83
PHF Volume:	0	0	0	448	0	308	157	272	0	0	103	228
Reduct Vol:	0	0	0	0	0	0	0	0	0	0	0	0
FinalVolume:	0	0	0	448	0	308	157	272	0	0	103	228
Critical Gap Module:												
Critical Gp:	xxxxx	xxxx	xxxxx	6.4	6.5	6.2	4.1	xxxx	xxxxx	xxxxx	xxxx	xxxxx
FollowUpTim:	xxxxx	xxxx	xxxxx	3.5	4.0	3.3	2.2	xxxx	xxxxx	xxxxx	xxxx	xxxxx
Capacity Module:												
Cnflict Vol:	xxxx	xxxx	xxxxx	803	803	218	332	xxxx	xxxxx	xxxx	xxxx	xxxxx
Potent Cap.:	xxxx	xxxx	xxxxx	355	319	827	1239	xxxx	xxxxx	xxxx	xxxx	xxxxx
Move Cap.:	xxxx	xxxx	xxxxx	321	279	827	1239	xxxx	xxxxx	xxxx	xxxx	xxxxx
Total Cap:	201	320	xxxxx	408	361	xxxxx	xxxx	xxxx	xxxxx	xxxx	xxxx	xxxxx
Volume/Cap:	xxxx	xxxx	xxxx	1.10	0.00	0.37	0.13	xxxx	xxxx	xxxx	xxxx	xxxx
Level Of Service Module:												
2Way95thQ:	xxxx	xxxx	xxxxx	xxxx	xxxx	xxxxx	0.4	xxxx	xxxxx	xxxx	xxxx	xxxxx
Control Del:	xxxxx	xxxx	xxxxx	xxxxx	xxxx	xxxxx	8.3	xxxx	xxxxx	xxxxx	xxxx	xxxxx
LOS by Move:	*	*	*	*	*	*	A	*	*	*	*	*
Movement:	LT	LTR	RT	LT	LTR	RT	LT	LTR	RT	LT	LTR	RT
Shared Cap.:	xxxx	xxxx	xxxxx	xxxx	514	xxxxx	xxxx	xxxx	xxxxx	xxxx	xxxx	xxxxx
SharedQueue:	xxxxx	xxxx	xxxxx	xxxxx	37.7	xxxxx	xxxxx	xxxx	xxxxx	xxxxx	xxxx	xxxxx
Shrd ConDel:	xxxxx	xxxx	xxxxx	xxxxx	243	xxxxx	xxxxx	xxxx	xxxxx	xxxxx	xxxx	xxxxx
Shared LOS:	*	*	*	*	F	*	*	*	*	*	*	*
ApproachDel:	xxxxxx			243.2			xxxxxx			xxxxxx		
ApproachLOS:	*			F			*			*		

Note: Queue reported is the number of cars per lane.

Church of the Woods
Opening Year (2009) With Project Traffic Conditions
Saturday Peak Hour

Level Of Service Computation Report
2000 HCM 4-Way Stop Method (Base Volume Alternative)

Intersection #4 Daley Canyon Road/State Route 189

Cycle (sec):	100	Critical Vol./Cap.(X):	1.166
Loss Time (sec):	0 (Y+R=4.0 sec)	Average Delay (sec/veh):	86.1
Optimal Cycle:	0	Level Of Service:	F

Approach:	North Bound				South Bound				East Bound				West Bound			
Movement:	L	- T	- R		L	- T	- R		L	- T	- R		L	- T	- R	
Control:	Stop Sign				Stop Sign				Stop Sign				Stop Sign			
Rights:	Include				Include				Include				Include			
Min. Green:	10	10	10	10	10	10	10	10	10	10	10	10	10	10	10	10
Lanes:	0	1	0	0	0	0	0	0	1	0	0	0	1!	0	0	0
Volume Module:																
Base Vol:	195	348	0	0	260	76	313	0	287	0	0	0				
Growth Adj:	1.00	1.00	1.00	1.00	1.00	1.00	1.00	1.00	1.00	1.00	1.00	1.00				
Initial Bse:	195	348	0	0	260	76	313	0	287	0	0	0				
User Adj:	1.00	1.00	1.00	1.00	1.00	1.00	1.00	1.00	1.00	1.00	1.00	1.00				
PHF Adj:	0.91	0.91	0.91	0.90	0.90	0.90	0.89	0.89	0.89	1.00	1.00	1.00				
PHF Volume:	215	385	0	0	288	84	350	0	321	0	0	0				
Reduct Vol:	0	0	0	0	0	0	0	0	0	0	0	0				
Reduced Vol:	215	385	0	0	288	84	350	0	321	0	0	0				
PCE Adj:	1.00	1.00	1.00	1.00	1.00	1.00	1.00	1.00	1.00	1.00	1.00	1.00				
MLF Adj:	1.00	1.00	1.00	1.00	1.00	1.00	1.00	1.00	1.00	1.00	1.00	1.00				
FinalVolume:	215	385	0	0	288	84	350	0	321	0	0	0				
Saturation Flow Module:																
Adjustment:	1.00	1.00	1.00	1.00	1.00	1.00	1.00	1.00	1.00	1.00	1.00	1.00				
Lanes:	0.36	0.64	0.00	0.00	0.77	0.23	0.52	0.00	0.48	0.00	0.00	0.00				
Final Sat.:	196	350	0	0	415	121	300	0	275	0	0	0				
Capacity Analysis Module:																
Vol/Sat:	1.10	1.10	xxxx	xxxx	0.69	0.69	1.17	xxxx	1.17	xxxx	xxxx	xxxx				
Crit Moves:		****			****		****									
Delay/Veh:	92.7	92.7	0.0	0.0	23.6	23.6	115.0	0.0	115.0	0.0	0.0	0.0				
Delay Adj:	1.00	1.00	1.00	1.00	1.00	1.00	1.00	1.00	1.00	1.00	1.00	1.00				
AdjDel/Veh:	92.7	92.7	0.0	0.0	23.6	23.6	115.0	0.0	115.0	0.0	0.0	0.0				
LOS by Move:	F	F	*	*	C	C	F	*	F	*	*	*				
ApproachDel:	92.7				23.6		115.0			xxxxxx						
Delay Adj:	1.00				1.00		1.00			xxxxx						
ApprAdjDel:	92.7				23.6		115.0			xxxxxx						
LOS by Appr:	F				C		F			*						
AllWayAvgQ:	12.6	12.6	12.6	2.1	2.1	2.1	16.9	16.9	16.9	0.0	0.0	0.0				

Note: Queue reported is the number of cars per lane.

Church of the Woods
Opening Year (2009) With Project Traffic Conditions
Saturday Peak Hour

Level Of Service Computation Report
2000 HCM 4-Way Stop Method (Base Volume Alternative)

Intersection #5 North Bay Road/State Route 189

Cycle (sec): 100 | Critical Vol./Cap.(X): 0.680
Loss Time (sec): 0 (Y+R=4.0 sec) | Average Delay (sec/veh): 19.4
Optimal Cycle: 0 | Level Of Service: C

Approach:	North Bound						South Bound						East Bound						West Bound					
Movement:	L	-	T	-	R		L	-	T	-	R		L	-	T	-	R		L	-	T	-	R	
Control:	Stop Sign						Stop Sign						Stop Sign						Stop Sign					
Rights:	Include						Include						Include						Include					
Min. Green:	10	10		10			10	10		10			10	10		10			10	10		10		
Lanes:	0	0	0	0	0		1	0	0	0	1		1	0	1	0	0		0	0	0	1	0	
Volume Module:																								
Base Vol:	0	0		0			140	0		281			298	328		0			0	224		105		
Growth Adj:	1.00	1.00		1.00			1.00	1.00		1.00			1.00	1.00		1.00			1.00	1.00		1.00		
Initial Bse:	0	0		0			140	0		281			298	328		0			0	224		105		
User Adj:	1.00	1.00		1.00			1.00	1.00		1.00			1.00	1.00		1.00			1.00	1.00		1.00		
PHF Adj:	1.00	1.00		1.00			0.95	0.95		0.95			0.86	0.86		0.86			0.87	0.87		0.87		
PHF Volume:	0	0		0			148	0		297			345	380		0			0	257		121		
Reduct Vol:	0	0		0			0	0		0			0	0		0			0	0		0		
Reduced Vol:	0	0		0			148	0		297			345	380		0			0	257		121		
PCE Adj:	1.00	1.00		1.00			1.00	1.00		1.00			1.00	1.00		1.00			1.00	1.00		1.00		
MLF Adj:	1.00	1.00		1.00			1.00	1.00		1.00			1.00	1.00		1.00			1.00	1.00		1.00		
FinalVolume:	0	0		0			148	0		297			345	380		0			0	257		121		
Saturation Flow Module:																								
Adjustment:	1.00	1.00		1.00			1.00	1.00		1.00			1.00	1.00		1.00			1.00	1.00		1.00		
Lanes:	0.00	0.00		0.00			1.00	0.00		1.00			1.00	1.00		0.00			0.00	0.68		0.32		
Final Sat.:	0	0		0			468	0		553			519	559		0			0	388		182		
Capacity Analysis Module:																								
Vol/Sat:	xxxx	xxxx		xxxx			0.32	xxxx		0.54			0.67	0.68		xxxx			xxxx	0.66		0.66		
Crit Moves:										****				****								****		
Delay/Veh:	0.0	0.0		0.0			13.5	0.0		15.7			22.0	21.3		0.0			0.0	20.3		20.3		
Delay Adj:	1.00	1.00		1.00			1.00	1.00		1.00			1.00	1.00		1.00			1.00	1.00		1.00		
AdjDel/Veh:	0.0	0.0		0.0			13.5	0.0		15.7			22.0	21.3		0.0			0.0	20.3		20.3		
LOS by Move:	*	*		*			B	*		C			C	C		*			*	C		C		
ApproachDel:	xxxxxx						15.0						21.6						20.3					
Delay Adj:	xxxxx						1.00						1.00						1.00					
ApprAdjDel:	xxxxxx						15.0						21.6						20.3					
LOS by Appr:	*						B						C						C					
AllWayAvgQ:	0.0	0.0		0.0			0.4	0.0		1.0			1.8	1.9		0.0			1.7	1.7		1.7		

Note: Queue reported is the number of cars per lane.

Church of the Woods
Opening Year (2009) With Project Traffic Conditions
Saturday Peak Hour

Level Of Service Computation Report
2000 HCM Unsignalized Method (Base Volume Alternative)

Intersection #6 Lake Gregory Road/State Route 189

Average Delay (sec/veh): 4.9 Worst Case Level Of Service: C[20.0]

Approach:	North Bound					South Bound					East Bound					West Bound				
Movement:	L	-	T	-	R	L	-	T	-	R	L	-	T	-	R	L	-	T	-	R
Control:	Uncontrolled					Uncontrolled					Stop Sign					Stop Sign				
Rights:	Include					Include					Include					Include				
Lanes:	0	0	0	1	0	0	1	0	0	0	0	0	0	0	0	0	0	1!	0	0
Volume Module:																				
Base Vol:	0	206		67		103	278		0		0		0		0	73		0		84
Growth Adj:	1.00	1.00		1.00		1.00	1.00		1.00		1.00		1.00		1.00	1.00		1.00		1.00
Initial Bse:	0	206		67		103	278		0		0		0		0	73		0		84
User Adj:	1.00	1.00		1.00		1.00	1.00		1.00		1.00		1.00		1.00	1.00		1.00		1.00
PHF Adj:	0.86	0.86		0.86		0.78	0.78		0.78		1.00		1.00		1.00	0.82		0.82		0.82
PHF Volume:	0	240		78		132	355		0		0		0		0	89		0		103
Reduct Vol:	0	0		0		0	0		0		0		0		0	0		0		0
FinalVolume:	0	240		78		132	355		0		0		0		0	89		0		103
Critical Gap Module:																				
Critical Gp:	xxxxx	xxxx		xxxxx		4.1	xxxx		xxxxx		xxxxx		xxxx		xxxxx	6.4		6.5		6.2
FollowUpTim:	xxxxx	xxxx		xxxxx		2.2	xxxx		xxxxx		xxxxx		xxxx		xxxxx	3.5		4.0		3.3
Capacity Module:																				
Cnflict Vol:	xxxx	xxxx		xxxxx		319	xxxx		xxxxx		xxxx		xxxx		xxxxx	898		898		279
Potent Cap.:	xxxx	xxxx		xxxxx		1253	xxxx		xxxxx		xxxx		xxxx		xxxxx	312		281		764
Move Cap.:	xxxx	xxxx		xxxxx		1253	xxxx		xxxxx		xxxx		xxxx		xxxxx	285		249		764
Volume/Cap:	xxxx	xxxx		xxxx		0.11	xxxx		xxxx		xxxx		xxxx		xxxx	0.31		0.00		0.13
Level Of Service Module:																				
2Way95thQ:	xxxx	xxxx		xxxxx		0.4	xxxx		xxxxx		xxxx		xxxx		xxxxx	xxxx		xxxx		xxxxx
Control Del:	xxxxx	xxxx		xxxxx		8.2	xxxx		xxxxx		xxxxx		xxxx		xxxxx	xxxxx		xxxx		xxxxx
LOS by Move:	*	*		*		A	*		*		*		*		*	*		*		*
Movement:	LT	-	LTR	-	RT	LT	-	LTR	-	RT	LT	-	LTR	-	RT	LT	-	LTR	-	RT
Shared Cap.:	xxxx	xxxx		xxxxx		xxxx	xxxx		xxxxx		xxxx		xxxx		xxxxx	xxxx		429		xxxxx
SharedQueue:	xxxxx	xxxx		xxxxx		0.4	xxxx		xxxxx		xxxxx		xxxx		xxxxx	xxxxx		2.3		xxxxx
Shrd ConDel:	xxxxx	xxxx		xxxxx		8.2	xxxx		xxxxx		xxxxx		xxxx		xxxxx	xxxxx		20.0		xxxxx
Shared LOS:	*	*		*		A	*		*		*		*		*	*		C		*
ApproachDel:	xxxxxx					xxxxxx					xxxxxx							20.0		
ApproachLOS:	*					*					*							C		

Note: Queue reported is the number of cars per lane.

Church of the Woods
Opening Year (2009) With Project Traffic Conditions
Saturday Peak Hour

Level Of Service Computation Report
2000 HCM Unsignalized Method (Base Volume Alternative)

Intersection #7 Lake Gregory Drive/State Route 18

Average Delay (sec/veh): 9.3 Worst Case Level Of Service: E[41.6]

Approach:	North Bound			South Bound			East Bound			West Bound		
Movement:	L	T	R	L	T	R	L	T	R	L	T	R
Control:	Stop Sign			Stop Sign			Uncontrolled			Uncontrolled		
Rights:	Include			Include			Include			Include		
Lanes:	0 0 0 0 0			1 0 0 0 1			1 0 1 0 0			0 0 1 0 1		
Volume Module:												
Base Vol:	0	0	0	260	0	92	116	450	0	0	460	157
Growth Adj:	1.00	1.00	1.00	1.00	1.00	1.00	1.00	1.00	1.00	1.00	1.00	1.00
Initial Bse:	0	0	0	260	0	92	116	450	0	0	460	157
User Adj:	1.00	1.00	1.00	1.00	1.00	1.00	1.00	1.00	1.00	1.00	1.00	1.00
PHF Adj:	1.00	1.00	1.00	0.97	0.97	0.97	0.85	0.85	0.85	0.85	0.85	0.85
PHF Volume:	0	0	0	267	0	94	137	531	0	0	539	184
Reduct Vol:	0	0	0	0	0	0	0	0	0	0	0	0
FinalVolume:	0	0	0	267	0	94	137	531	0	0	539	184
Critical Gap Module:												
Critical Gp:	xxxxx	xxxx	xxxxx	6.4	xxxx	6.2	4.1	xxxx	xxxxx	xxxxx	xxxx	xxxxx
FollowUpTim:	xxxxx	xxxx	xxxxx	3.5	xxxx	3.3	2.2	xxxx	xxxxx	xxxxx	xxxx	xxxxx
Capacity Module:												
Cnflict Vol:	xxxx	xxxx	xxxxx	1343	xxxx	539	722	xxxx	xxxxx	xxxx	xxxx	xxxxx
Potent Cap.:	xxxx	xxxx	xxxxx	169	xxxx	547	889	xxxx	xxxxx	xxxx	xxxx	xxxxx
Move Cap.:	xxxx	xxxx	xxxxx	149	xxxx	547	889	xxxx	xxxxx	xxxx	xxxx	xxxxx
Total Cap:	191	231	xxxxx	324	290	xxxxx	xxxx	xxxx	xxxxx	xxxx	xxxx	xxxxx
Volume/Cap:	xxxx	xxxx	xxxx	0.82	xxxx	0.17	0.15	xxxx	xxxx	xxxx	xxxx	xxxx
Level Of Service Module:												
2Way95thQ:	xxxx	xxxx	xxxxx	7.0	xxxx	0.6	0.5	xxxx	xxxxx	xxxx	xxxx	xxxxx
Control Del:	xxxxx	xxxx	xxxxx	51.7	xxxx	13.0	9.8	xxxx	xxxxx	xxxxx	xxxx	xxxxx
LOS by Move:	*	*	*	F	*	B	A	*	*	*	*	*
Movement:	LT	LTR	RT	LT	LTR	RT	LT	LTR	RT	LT	LTR	RT
Shared Cap.:	xxxx	xxxx	xxxxx	xxxx	xxxx	xxxxx	xxxx	xxxx	xxxxx	xxxx	xxxx	xxxxx
SharedQueue:	xxxxx	xxxx	xxxxx	xxxxx	xxxx	xxxxx	xxxxx	xxxx	xxxxx	xxxxx	xxxx	xxxxx
Shrd ConDel:	xxxxx	xxxx	xxxxx	xxxxx	xxxx	xxxxx	xxxxx	xxxx	xxxxx	xxxxx	xxxx	xxxxx
Shared LOS:	*	*	*	*	*	*	*	*	*	*	*	*
ApproachDel:	xxxxxx			41.6			xxxxxx			xxxxxx		
ApproachLOS:	*			E			*			*		

Note: Queue reported is the number of cars per lane.

Church of the Woods
Opening Year (2009) With Project Traffic Conditions
Saturday Peak Hour

Level Of Service Computation Report
2000 HCM Unsignalized Method (Base Volume Alternative)

Intersection #8 Bear Springs Road/State Route 18

Average Delay (sec/veh): 2.1 Worst Case Level Of Service: D[31.3]

Approach:	North Bound			South Bound			East Bound			West Bound		
Movement:	L -	T -	R	L -	T -	R	L -	T -	R	L -	T -	R
Control:	Stop Sign			Stop Sign			Uncontrolled			Uncontrolled		
Rights:	Include			Include			Include			Include		
Lanes:	0 0	1! 0	0	0 0	1! 0	0	1 0	0 1	0	1 0	0 1	0
Volume Module:												
Base Vol:	1	0	4	46	0	32	48	766	1	10	709	30
Growth Adj:	1.00	1.00	1.00	1.00	1.00	1.00	1.00	1.00	1.00	1.00	1.00	1.00
Initial Bse:	1	0	4	46	0	32	48	766	1	10	709	30
User Adj:	1.00	1.00	1.00	1.00	1.00	1.00	1.00	1.00	1.00	1.00	1.00	1.00
PHF Adj:	0.50	0.50	0.50	0.84	0.84	0.84	0.92	0.92	0.92	0.94	0.94	0.94
PHF Volume:	2	0	8	55	0	38	52	834	1	11	758	32
Reduct Vol:	0	0	0	0	0	0	0	0	0	0	0	0
FinalVolume:	2	0	8	55	0	38	52	834	1	11	758	32
Critical Gap Module:												
Critical Gp:	7.1	6.5	6.2	7.1	6.5	6.2	4.1	xxxx	xxxxx	4.1	xxxx	xxxxx
FollowUpTim:	3.5	4.0	3.3	3.5	4.0	3.3	2.2	xxxx	xxxxx	2.2	xxxx	xxxxx
Capacity Module:												
Cnflict Vol:	1754	1751	835	1739	1736	774	790	xxxx	xxxxx	836	xxxx	xxxxx
Potent Cap.:	67	87	371	69	88	401	839	xxxx	xxxxx	807	xxxx	xxxxx
Move Cap.:	57	80	371	64	82	401	839	xxxx	xxxxx	807	xxxx	xxxxx
Total Cap:	159	187	xxxxx	175	196	xxxxx	xxxx	xxxx	xxxxx	xxxx	xxxx	xxxxx
Volume/Cap:	0.01	0.00	0.02	0.31	0.00	0.10	0.06	xxxx	xxxx	0.01	xxxx	xxxx
Level Of Service Module:												
2Way95thQ:	xxxx	xxxx	xxxxx	xxxx	xxxx	xxxxx	0.2	xxxx	xxxxx	0.0	xxxx	xxxxx
Control Del:	xxxxx	xxxx	xxxxx	xxxxx	xxxx	xxxxx	9.6	xxxx	xxxxx	9.5	xxxx	xxxxx
LOS by Move:	*	*	*	*	*	*	A	*	*	A	*	*
Movement:	LT -	LTR -	RT	LT -	LTR -	RT	LT -	LTR -	RT	LT -	LTR -	RT
Shared Cap.:	xxxx	293	xxxxx	xxxx	228	xxxxx	xxxx	xxxx	xxxxx	xxxx	xxxx	xxxxx
SharedQueue:	xxxxx	0.1	xxxxx	xxxxx	1.9	xxxxx	xxxxx	xxxx	xxxxx	xxxxx	xxxx	xxxxx
Shrd ConDel:	xxxxx	17.7	xxxxx	xxxxx	31.3	xxxxx	xxxxx	xxxx	xxxxx	xxxxx	xxxx	xxxxx
Shared LOS:	*	C	*	*	D	*	*	*	*	*	*	*
ApproachDel:	17.7			31.3			xxxxxx			xxxxxx		
ApproachLOS:	C			D			*			*		

Note: Queue reported is the number of cars per lane.

Church of the Woods
Opening Year (2009) With Project Traffic Conditions
Saturday Peak Hour

Level Of Service Computation Report
2000 HCM Unsignalized Method (Base Volume Alternative)

Intersection #9 Project Access/State Route 18

Average Delay (sec/veh): 0.4 Worst Case Level Of Service: C[16.9]

Approach:	North Bound			South Bound			East Bound			West Bound		
Movement:	L	T	R	L	T	R	L	T	R	L	T	R
Control:	Stop Sign			Stop Sign			Uncontrolled			Uncontrolled		
Rights:	Include			Include			Include			Include		
Lanes:	0 0 0 0 0			1 0 0 0 1			1 0 1 0 0			0 0 1 0 1		
Volume Module:												
Base Vol:	0	0	0	20	0	11	10	824	0	0	715	18
Growth Adj:	1.00	1.00	1.00	1.00	1.00	1.00	1.00	1.00	1.00	1.00	1.00	1.00
Initial Bse:	0	0	0	20	0	11	10	824	0	0	715	18
User Adj:	1.00	1.00	1.00	1.00	1.00	1.00	1.00	1.00	1.00	1.00	1.00	1.00
PHF Adj:	1.00	1.00	1.00	0.95	0.95	0.95	0.95	0.91	1.00	1.00	0.90	0.95
PHF Volume:	0	0	0	21	0	12	11	905	0	0	792	19
Reduct Vol:	0	0	0	0	0	0	0	0	0	0	0	0
FinalVolume:	0	0	0	21	0	12	11	905	0	0	792	19
Critical Gap Module:												
Critical Gp:	xxxxx	xxxx	xxxxx	6.4	xxxx	6.2	4.1	xxxx	xxxxx	xxxxx	xxxx	xxxxx
FollowUpTim:	xxxxx	xxxx	xxxxx	3.5	xxxx	3.3	2.2	xxxx	xxxxx	xxxxx	xxxx	xxxxx
Capacity Module:												
Cnflict Vol:	xxxx	xxxx	xxxxx	1718	xxxx	792	811	xxxx	xxxxx	xxxx	xxxx	xxxxx
Potent Cap.:	xxxx	xxxx	xxxxx	100	xxxx	392	824	xxxx	xxxxx	xxxx	xxxx	xxxxx
Move Cap.:	xxxx	xxxx	xxxxx	99	xxxx	392	824	xxxx	xxxxx	xxxx	xxxx	xxxxx
Total Cap:	234	258	xxxxx	292	263	xxxxx	xxxx	xxxx	xxxxx	xxxx	xxxx	xxxxx
Volume/Cap:	xxxx	xxxx	xxxx	0.07	xxxx	0.03	0.01	xxxx	xxxx	xxxx	xxxx	xxxx
Level Of Service Module:												
2Way95thQ:	xxxx	xxxx	xxxxx	0.2	xxxx	0.1	0.0	xxxx	xxxxx	xxxx	xxxx	xxxxx
Control Del:	xxxxx	xxxx	xxxxx	18.3	xxxx	14.5	9.4	xxxx	xxxxx	xxxxx	xxxx	xxxxx
LOS by Move:	*	*	*	C	*	B	A	*	*	*	*	*
Movement:	LT - LTR - RT			LT - LTR - RT			LT - LTR - RT			LT - LTR - RT		
Shared Cap.:	xxxx	xxxx	xxxxx	xxxx	xxxx	xxxxx	xxxx	xxxx	xxxxx	xxxx	xxxx	xxxxx
SharedQueue:	xxxxx	xxxx	xxxxx	xxxxx	xxxx	xxxxx	xxxxx	xxxx	xxxxx	xxxxx	xxxx	xxxxx
Shrd ConDel:	xxxxx	xxxx	xxxxx	xxxxx	xxxx	xxxxx	xxxxx	xxxx	xxxxx	xxxxx	xxxx	xxxxx
Shared LOS:	*	*	*	*	*	*	*	*	*	*	*	*
ApproachDel:	xxxxxx			16.9			xxxxxx			xxxxxx		
ApproachLOS:	*			C			*			*		

Note: Queue reported is the number of cars per lane.

Church of the Woods
Opening Year (2009) With Project Traffic Conditions
Saturday Peak Hour

Level Of Service Computation Report
2000 HCM Unsignalized Method (Base Volume Alternative)

Intersection #10 Daley Canyon Road/State Route 18

Average Delay (sec/veh): 6.7 Worst Case Level Of Service: C[18.9]

Approach:	North Bound					South Bound					East Bound					West Bound				
Movement:	L	-	T	-	R	L	-	T	-	R	L	-	T	-	R	L	-	T	-	R
Control:	Stop Sign					Stop Sign					Uncontrolled					Uncontrolled				
Rights:	Include					Include					Include					Include				
Lanes:	0	0	0	0	0	0	0	0	0	1	1	0	1	0	0	0	0	1	0	0
Volume Module:																				
Base Vol:	0	0	0	0	0	387	358	486	0	0	346	0								
Growth Adj:	1.00	1.00	1.00	1.00	1.00	1.00	1.00	1.00	1.00	1.00	1.00	1.00								
Initial Bse:	0	0	0	0	0	387	358	486	0	0	346	0								
User Adj:	1.00	1.00	1.00	1.00	1.00	1.00	1.00	1.00	1.00	1.00	1.00	1.00								
PHF Adj:	1.00	1.00	1.00	1.00	1.00	0.93	0.94	0.91	1.00	1.00	0.90	1.00								
PHF Volume:	0	0	0	0	0	418	380	534	0	0	383	0								
Reduct Vol:	0	0	0	0	0	0	0	0	0	0	0	0								
FinalVolume:	0	0	0	0	0	418	380	534	0	0	383	0								
Critical Gap Module:																				
Critical Gp:	xxxxx	xxxx	xxxxx	xxxxx	xxxx	6.2	4.1	xxxx	xxxxx	xxxxx	xxxx	xxxxx								
FollowUpTim:	xxxxx	xxxx	xxxxx	xxxxx	xxxx	3.3	2.2	xxxx	xxxxx	xxxxx	xxxx	xxxxx								
Capacity Module:																				
Cnflict Vol:	xxxx	xxxx	xxxxx	xxxx	xxxx	383	383	xxxx	xxxxx	xxxx	xxxx	xxxxx								
Potent Cap.:	xxxx	xxxx	xxxxx	xxxx	xxxx	669	1186	xxxx	xxxxx	xxxx	xxxx	xxxxx								
Move Cap.:	xxxx	xxxx	xxxxx	xxxx	xxxx	669	1186	xxxx	xxxxx	xxxx	xxxx	xxxxx								
Volume/Cap:	xxxx	xxxx	xxxx	xxxx	xxxx	0.63	0.32	xxxx	xxxx	xxxx	xxxx	xxxx								
Level Of Service Module:																				
2Way95thQ:	xxxx	xxxx	xxxxx	xxxx	xxxx	4.4	1.4	xxxx	xxxxx	xxxx	xxxx	xxxxx								
Control Del:	xxxxx	xxxx	xxxxx	xxxxx	xxxx	18.9	9.5	xxxx	xxxxx	xxxxx	xxxx	xxxxx								
LOS by Move:	*	*	*	*	*	C	A	*	*	*	*	*								
Movement:	LT	-	LTR	-	RT	LT	-	LTR	-	RT	LT	-	LTR	-	RT	LT	-	LTR	-	RT
Shared Cap.:	xxxx	xxxx	xxxxx	xxxx	xxxx	xxxxx	xxxx	xxxx	xxxxx	xxxx	xxxx	xxxxx								
SharedQueue:	xxxxx	xxxx	xxxxx	xxxxx	xxxx	xxxxx	xxxxx	xxxx	xxxxx	xxxxx	xxxx	xxxxx								
Shrd ConDel:	xxxxx	xxxx	xxxxx	xxxxx	xxxx	xxxxx	xxxxx	xxxx	xxxxx	xxxxx	xxxx	xxxxx								
Shared LOS:	*	*	*	*	*	*	*	*	*	*	*	*								
ApproachDel:	xxxxxx					18.9			xxxxxx				xxxxxx							
ApproachLOS:	*					C			*				*							

Note: Queue reported is the number of cars per lane.

Church of the Woods
Opening Year (2009) With Project Traffic Conditions
Saturday Peak Hour

Level Of Service Computation Report
2000 HCM Unsignalized Method (Base Volume Alternative)

Intersection #11 Daley Canyon Road/Daley Canyon Access Road

Average Delay (sec/veh): 3.5 Worst Case Level Of Service: B[12.4]

Approach:	North Bound			South Bound			East Bound			West Bound		
Movement:	L	T	R	L	T	R	L	T	R	L	T	R
Control:	Uncontrolled			Uncontrolled			Stop Sign			Stop Sign		
Rights:	Include			Include			Include			Include		
Lanes:	0 0 1	0	0	0 1	0 0	0	0 0 0	0	0	0 0 0	0	1
Volume Module:												
Base Vol:	0	358	0	171	387	0	0	0	0	0	0	165
Growth Adj:	1.00	1.00	1.00	1.00	1.00	1.00	1.00	1.00	1.00	1.00	1.00	1.00
Initial Bse:	0	358	0	171	387	0	0	0	0	0	0	165
User Adj:	1.00	1.00	1.00	1.00	1.00	1.00	1.00	1.00	1.00	1.00	1.00	1.00
PHF Adj:	1.00	0.94	1.00	0.79	0.93	1.00	1.00	1.00	1.00	1.00	1.00	0.88
PHF Volume:	0	380	0	217	418	0	0	0	0	0	0	187
Reduct Vol:	0	0	0	0	0	0	0	0	0	0	0	0
FinalVolume:	0	380	0	217	418	0	0	0	0	0	0	187
Critical Gap Module:												
Critical Gp:	xxxxx	xxxx	xxxxx	4.1	xxxx	xxxxx	xxxxx	xxxx	xxxxx	xxxxx	xxxx	6.2
FollowUpTim:	xxxxx	xxxx	xxxxx	2.2	xxxx	xxxxx	xxxxx	xxxx	xxxxx	xxxxx	xxxx	3.3
Capacity Module:												
Cnflict Vol:	xxxx	xxxx	xxxxx	380	xxxx	xxxxx	xxxx	xxxx	xxxxx	xxxx	xxxx	380
Potent Cap.:	xxxx	xxxx	xxxxx	1189	xxxx	xxxxx	xxxx	xxxx	xxxxx	xxxx	xxxx	671
Move Cap.:	xxxx	xxxx	xxxxx	1189	xxxx	xxxxx	xxxx	xxxx	xxxxx	xxxx	xxxx	671
Volume/Cap:	xxxx	xxxx	xxxx	0.18	xxxx	xxxx	xxxx	xxxx	xxxx	xxxx	xxxx	0.28
Level Of Service Module:												
2Way95thQ:	xxxx	xxxx	xxxxx	0.7	xxxx	xxxxx	xxxx	xxxx	xxxxx	xxxx	xxxx	1.1
Control Del:	xxxxx	xxxx	xxxxx	8.7	xxxx	xxxxx	xxxxx	xxxx	xxxxx	xxxxx	xxxx	12.4
LOS by Move:	*	*	*	A	*	*	*	*	*	*	*	B
Movement:	LT -	LTR -	RT	LT -	LTR -	RT	LT -	LTR -	RT	LT -	LTR -	RT
Shared Cap.:	xxxx	xxxx	xxxxx	xxxx	xxxx	xxxxx	xxxx	xxxx	xxxxx	xxxx	xxxx	xxxxx
SharedQueue:	xxxxx	xxxx	xxxxx	0.7	xxxx	xxxxx	xxxxx	xxxx	xxxxx	xxxxx	xxxx	xxxxx
Shrd ConDel:	xxxxx	xxxx	xxxxx	8.7	xxxx	xxxxx	xxxxx	xxxx	xxxxx	xxxxx	xxxx	xxxxx
Shared LOS:	*	*	*	A	*	*	*	*	*	*	*	*
ApproachDel:	xxxxxx			xxxxxx			xxxxxx			12.4		
ApproachLOS:	*			*			*			B		

Note: Queue reported is the number of cars per lane.

Church of the Woods
Opening Year (2009) With Project Traffic Conditions
Saturday Peak Hour

Level Of Service Computation Report
2000 HCM Unsignalized Method (Base Volume Alternative)

Intersection #12 Daley Canyon Access Road/State Route 18

Average Delay (sec/veh): 6.8 Worst Case Level Of Service: E[41.4]

Approach:	North Bound					South Bound					East Bound					West Bound				
Movement:	L	-	T	-	R	L	-	T	-	R	L	-	T	-	R	L	-	T	-	R
Control:	Stop Sign					Stop Sign					Uncontrolled					Uncontrolled				
Rights:	Include					Include					Include					Include				
Lanes:	0	0	0	0	0	1	0	0	0	0	0	0	1	0	0	0	0	1	0	1
Volume Module:																				
Base Vol:	0	0	0			171	0	0			0	486	0			0	346	165		
Growth Adj:	1.00	1.00	1.00			1.00	1.00	1.00			1.00	1.00	1.00			1.00	1.00	1.00		
Initial Bse:	0	0	0			171	0	0			0	486	0			0	346	165		
User Adj:	1.00	1.00	1.00			1.00	1.00	1.00			1.00	1.00	1.00			1.00	1.00	1.00		
PHF Adj:	1.00	1.00	1.00			0.79	1.00	1.00			1.00	0.91	1.00			1.00	0.90	0.88		
PHF Volume:	0	0	0			217	0	0			0	534	0			0	383	187		
Reduct Vol:	0	0	0			0	0	0			0	0	0			0	0	0		
FinalVolume:	0	0	0			217	0	0			0	534	0			0	383	187		
Critical Gap Module:																				
Critical Gp:	xxxxx	xxxx	xxxxx			6.4	xxxx	xxxxx			xxxxx	xxxx	xxxxx			xxxxx	xxxx	xxxxx		
FollowUpTim:	xxxxx	xxxx	xxxxx			3.5	xxxx	xxxxx			xxxxx	xxxx	xxxxx			xxxxx	xxxx	xxxxx		
Capacity Module:																				
Cnflict Vol:	xxxx	xxxx	xxxxx			917	xxxx	xxxxx			xxxx	xxxx	xxxxx			xxxx	xxxx	xxxxx		
Potent Cap.:	xxxx	xxxx	xxxxx			304	xxxx	xxxxx			xxxx	xxxx	xxxxx			xxxx	xxxx	xxxxx		
Move Cap.:	xxxx	xxxx	xxxxx			304	xxxx	xxxxx			xxxx	xxxx	xxxxx			xxxx	xxxx	xxxxx		
Volume/Cap:	xxxx	xxxx	xxxx			0.71	xxxx	xxxx			xxxx	xxxx	xxxx			xxxx	xxxx	xxxx		
Level Of Service Module:																				
2Way95thQ:	xxxx	xxxx	xxxxx			5.1	xxxx	xxxxx			xxxx	xxxx	xxxxx			xxxx	xxxx	xxxxx		
Control Del:	xxxxx	xxxx	xxxxx			41.4	xxxx	xxxxx			xxxxx	xxxx	xxxxx			xxxxx	xxxx	xxxxx		
LOS by Move:	*	*	*			E	*	*			*	*	*			*	*	*		
Movement:	LT	-	LTR	-	RT	LT	-	LTR	-	RT	LT	-	LTR	-	RT	LT	-	LTR	-	RT
Shared Cap.:	xxxx	xxxx	xxxxx			xxxx	xxxx	xxxxx			xxxx	xxxx	xxxxx			xxxx	xxxx	xxxxx		
SharedQueue:	xxxxx	xxxx	xxxxx			xxxxx	xxxx	xxxxx			xxxxx	xxxx	xxxxx			xxxxx	xxxx	xxxxx		
Shrd ConDel:	xxxxx	xxxx	xxxxx			xxxxx	xxxx	xxxxx			xxxxx	xxxx	xxxxx			xxxxx	xxxx	xxxxx		
Shared LOS:	*	*	*			*	*	*			*	*	*			*	*	*		
ApproachDel:	xxxxxx					41.4					xxxxxx					xxxxxx				
ApproachLOS:	*					E					*					*				

Note: Queue reported is the number of cars per lane.

Church of the Woods
Opening Year (2009) With Project Traffic Conditions
Saturday Peak Hour

Level Of Service Computation Report
2000 HCM Unsignalized Method (Base Volume Alternative)

Intersection #13 State Route 173/State Route 18

Average Delay (sec/veh): 26.9 Worst Case Level Of Service: F[111.9]

Approach:	North Bound					South Bound					East Bound					West Bound				
Movement:	L	-	T	-	R	L	-	T	-	R	L	-	T	-	R	L	-	T	-	R
Control:	Stop Sign					Stop Sign					Uncontrolled					Uncontrolled				
Rights:	Include					Include					Include					Include				
Lanes:	0	0	0	0	0	0	0	1!	0	0	1	0	1	0	0	0	0	1	0	1
Volume Module:																				
Base Vol:	0	0	0			89	0				154	264	311	0		0	264		94	
Growth Adj:	1.00	1.00	1.00			1.00	1.00				1.00	1.00	1.00	1.00		1.00	1.00		1.00	
Initial Bse:	0	0	0			89	0				154	264	311	0		0	264		94	
User Adj:	1.00	1.00	1.00			1.00	1.00				1.00	1.00	1.00	1.00		1.00	1.00		1.00	
PHF Adj:	1.00	1.00	1.00			0.79	0.79				0.79	0.82	0.82	0.82		0.94	0.94		0.94	
PHF Volume:	0	0	0			113	0				196	324	382	0		0	281		100	
Reduct Vol:	0	0	0			0	0				0	0	0	0		0	0		0	
FinalVolume:	0	0	0			113	0				196	324	382	0		0	281		100	
Critical Gap Module:																				
Critical Gp:	xxxxx	xxxx	xxxxx			6.4	6.5				6.2	4.1	xxxx	xxxxx		xxxxx	xxxx		xxxxx	
FollowUpTim:	xxxxx	xxxx	xxxxx			3.5	4.0				3.3	2.2	xxxx	xxxxx		xxxxx	xxxx		xxxxx	
Capacity Module:																				
Cnflict Vol:	xxxx	xxxx	xxxxx			1311	1311				281	382	xxxx	xxxxx		xxxx	xxxx		xxxxx	
Potent Cap.:	xxxx	xxxx	xxxxx			177	160				762	1188	xxxx	xxxxx		xxxx	xxxx		xxxxx	
Move Cap.:	xxxx	xxxx	xxxxx			140	117				762	1188	xxxx	xxxxx		xxxx	xxxx		xxxxx	
Volume/Cap:	xxxx	xxxx	xxxx			0.81	0.00				0.26	0.27	xxxx	xxxx		xxxx	xxxx		xxxx	
Level Of Service Module:																				
2Way95thQ:	xxxx	xxxx	xxxxx			xxxx	xxxx				xxxxx	1.1	xxxx	xxxxx		xxxx	xxxx		xxxxx	
Control Del:	xxxxx	xxxx	xxxxx			xxxxx	xxxx				xxxxx	9.2	xxxx	xxxxx		xxxxx	xxxx		xxxxx	
LOS by Move:	*	*	*			*	*				*	A	*	*		*	*		*	
Movement:	LT	-	LTR	-	RT	LT	-	LTR	-	RT	LT	-	LTR	-	RT	LT	-	LTR	-	RT
Shared Cap.:	xxxx	xxxx	xxxxx			xxxx	290				xxxxx	xxxx	xxxx	xxxxx		xxxx	xxxx		xxxxx	
SharedQueue:	xxxxx	xxxx	xxxxx			xxxxx	12.1				xxxxx	xxxxx	xxxx	xxxxx		xxxxx	xxxx		xxxxx	
Shrd ConDel:	xxxxx	xxxx	xxxxx			xxxxx	112				xxxxx	xxxxx	xxxx	xxxxx		xxxxx	xxxx		xxxxx	
Shared LOS:	*	*	*			*	F				*	*	*	*		*	*		*	
ApproachDel:	xxxxxx					111.9					xxxxxx					xxxxxx				
ApproachLOS:	*					F					*					*				

Note: Queue reported is the number of cars per lane.

Church of the Woods
Opening Year (2008) With Project Traffic Conditions
Sunday Peak Hour

Level Of Service Computation Report
2000 HCM Unsignalized Method (Base Volume Alternative)

Intersection #1 North Road/State Route 189

Average Delay (sec/veh): 4.7 Worst Case Level Of Service: B[13.0]

Approach:	North Bound			South Bound			East Bound			West Bound		
Movement:	L -	T -	R	L -	T -	R	L -	T -	R	L -	T -	R
Control:	Stop Sign			Stop Sign			Uncontrolled			Uncontrolled		
Rights:	Include			Include			Include			Include		
Lanes:	0 0 0 0 0			0 0 1! 0 0			0 1 0 0 0			0 0 0 1 0		
Volume Module:												
Base Vol:	0	0	0	99	0	53	37	83	0	0	153	87
Growth Adj:	1.00	1.00	1.00	1.00	1.00	1.00	1.00	1.00	1.00	1.00	1.00	1.00
Initial Bse:	0	0	0	99	0	53	37	83	0	0	153	87
User Adj:	1.00	1.00	1.00	1.00	1.00	1.00	1.00	1.00	1.00	1.00	1.00	1.00
PHF Adj:	1.00	1.00	1.00	0.77	0.77	0.77	0.86	0.86	0.86	0.85	0.85	0.85
PHF Volume:	0	0	0	128	0	69	43	96	0	0	179	102
Reduct Vol:	0	0	0	0	0	0	0	0	0	0	0	0
FinalVolume:	0	0	0	128	0	69	43	96	0	0	179	102
Critical Gap Module:												
Critical Gp:	xxxxx	xxxx	xxxxx	6.4	6.5	6.2	4.1	xxxx	xxxxx	xxxxx	xxxx	xxxxx
FollowUpTim:	xxxxx	xxxx	xxxxx	3.5	4.0	3.3	2.2	xxxx	xxxxx	xxxxx	xxxx	xxxxx
Capacity Module:												
Cnflict Vol:	xxxx	xxxx	xxxxx	413	413	230	281	xxxx	xxxxx	xxxx	xxxx	xxxxx
Potent Cap.:	xxxx	xxxx	xxxxx	600	533	814	1293	xxxx	xxxxx	xxxx	xxxx	xxxxx
Move Cap.:	xxxx	xxxx	xxxxx	584	514	814	1293	xxxx	xxxxx	xxxx	xxxx	xxxxx
Volume/Cap:	xxxx	xxxx	xxxx	0.22	0.00	0.08	0.03	xxxx	xxxx	xxxx	xxxx	xxxx
Level Of Service Module:												
2Way95thQ:	xxxx	xxxx	xxxxx	xxxx	xxxx	xxxxx	0.1	xxxx	xxxxx	xxxx	xxxx	xxxxx
Control Del:	xxxxx	xxxx	xxxxx	xxxxx	xxxx	xxxxx	7.9	xxxx	xxxxx	xxxxx	xxxx	xxxxx
LOS by Move:	*	*	*	*	*	*	A	*	*	*	*	*
Movement:	LT -	LTR -	RT	LT -	LTR -	RT	LT -	LTR -	RT	LT -	LTR -	RT
Shared Cap.:	xxxx	xxxx	xxxxx	xxxx	648	xxxxx	xxxx	xxxx	xxxxx	xxxx	xxxx	xxxxx
SharedQueue:	xxxxx	xxxx	xxxxx	xxxxx	1.3	xxxxx	0.1	xxxx	xxxxx	xxxxx	xxxx	xxxxx
Shrd ConDel:	xxxxx	xxxx	xxxxx	xxxxx	13.0	xxxxx	7.9	xxxx	xxxxx	xxxxx	xxxx	xxxxx
Shared LOS:	*	*	*	*	B	*	A	*	*	*	*	*
ApproachDel:	xxxxxx			13.0			xxxxxx			xxxxxx		
ApproachLOS:	*			B			*			*		

Note: Queue reported is the number of cars per lane.

Church of the Woods
Opening Year (2008) With Project Traffic Conditions
Sunday Peak Hour

Level Of Service Computation Report
2000 HCM Unsignalized Method (Base Volume Alternative)

Intersection #2 Bear Springs Road/State Route 189

Average Delay (sec/veh): 4.4 Worst Case Level Of Service: B[14.0]

Approach:	North Bound						South Bound						East Bound						West Bound					
Movement:	L	-	T	-	R		L	-	T	-	R		L	-	T	-	R		L	-	T	-	R	
Control:	Stop Sign						Stop Sign						Uncontrolled						Uncontrolled					
Rights:	Include						Include						Include						Include					
Lanes:	0	0	1!	0	0		0	0	1!	0	0		0	0	1!	0	0		0	0	1!	0	0	
Volume Module:																								
Base Vol:	20	14		10			35	11		59			42	147		29			12	185		19		
Growth Adj:	1.00	1.00		1.00			1.00	1.00		1.00			1.00	1.00		1.00			1.00	1.00		1.00		
Initial Bse:	20	14		10			35	11		59			42	147		29			12	185		19		
User Adj:	1.00	1.00		1.00			1.00	1.00		1.00			1.00	1.00		1.00			1.00	1.00		1.00		
PHF Adj:	0.81	0.81		0.81			0.79	0.79		0.79			0.83	0.83		0.83			0.96	0.96		0.96		
PHF Volume:	25	17		12			44	14		75			50	176		35			12	192		20		
Reduct Vol:	0	0		0			0	0		0			0	0		0			0	0		0		
FinalVolume:	25	17		12			44	14		75			50	176		35			12	192		20		
Critical Gap Module:																								
Critical Gp:	7.1	6.5		6.2			7.1	6.5		6.2			4.1	xxxx		xxxxx			4.1	xxxx		xxxxx		
FollowUpTim:	3.5	4.0		3.3			3.5	4.0		3.3			2.2	xxxx		xxxxx			2.2	xxxx		xxxxx		
Capacity Module:																								
Cnflict Vol:	566	531		194			536	539		202			212	xxxx		xxxxx			211	xxxx		xxxxx		
Potent Cap.:	438	457		853			458	452		844			1371	xxxx		xxxxx			1371	xxxx		xxxxx		
Move Cap.:	376	435		853			423	431		844			1371	xxxx		xxxxx			1371	xxxx		xxxxx		
Volume/Cap:	0.07	0.04		0.01			0.10	0.03		0.09			0.04	xxxx		xxxx			0.01	xxxx		xxxx		
Level Of Service Module:																								
2Way95thQ:	xxxx	xxxx		xxxxx			xxxx	xxxx		xxxxx			0.1	xxxx		xxxxx			0.0	xxxx		xxxxx		
Control Del:	xxxxx	xxxx		xxxxx			xxxxx	xxxx		xxxxx			7.7	xxxx		xxxxx			7.6	xxxx		xxxxx		
LOS by Move:	*	*		*			*	*		*			A	*		*			A	*		*		
Movement:	LT	-	LTR	-	RT		LT	-	LTR	-	RT		LT	-	LTR	-	RT		LT	-	LTR	-	RT	
Shared Cap.:	xxxx	453		xxxxx			xxxx	589		xxxxx			xxxx	xxxx		xxxxx			xxxx	xxxx		xxxxx		
SharedQueue:	xxxxx	0.4		xxxxx			xxxxx	0.9		xxxxx			xxxxx	xxxx		xxxxx			xxxxx	xxxx		xxxxx		
Shrd ConDel:	xxxxx	14.0		xxxxx			xxxxx	12.9		xxxxx			xxxxx	xxxx		xxxxx			xxxxx	xxxx		xxxxx		
Shared LOS:	*	B		*			*	B		*			*	*		*			*	*		*		
ApproachDel:	14.0						12.9						xxxxxx						xxxxxx					
ApproachLOS:	B						B						*						*					

Note: Queue reported is the number of cars per lane.

Church of the Woods
Opening Year (2008) With Project Traffic Conditions
Sunday Peak Hour

Level Of Service Computation Report
2000 HCM Unsignalized Method (Base Volume Alternative)

Intersection #3 Grass Valley Road/State Route 189

Average Delay (sec/veh): 20.1 Worst Case Level Of Service: E[36.4]

Approach:	North Bound			South Bound			East Bound			West Bound		
Movement:	L - T - R			L - T - R			L - T - R			L - T - R		
Control:	Stop Sign			Stop Sign			Uncontrolled			Uncontrolled		
Rights:	Include			Include			Include			Include		
Lanes:	0 0 0 0 0			0 0 1! 0 0			1 0 1 0 0			0 0 0 1 0		
Volume Module:												
Base Vol:	0	0	0	347	0	170	70	160	0	0	54	145
Growth Adj:	1.00	1.00	1.00	1.00	1.00	1.00	1.00	1.00	1.00	1.00	1.00	1.00
Initial Bse:	0	0	0	347	0	170	70	160	0	0	54	145
User Adj:	1.00	1.00	1.00	1.00	1.00	1.00	1.00	1.00	1.00	1.00	1.00	1.00
PHF Adj:	1.00	1.00	1.00	0.90	0.90	0.90	0.91	0.91	0.91	0.83	0.83	0.83
PHF Volume:	0	0	0	386	0	189	77	176	0	0	65	176
Reduct Vol:	0	0	0	0	0	0	0	0	0	0	0	0
FinalVolume:	0	0	0	386	0	189	77	176	0	0	65	176
Critical Gap Module:												
Critical Gp:	xxxxx	xxxx	xxxxx	6.4	6.5	6.2	4.1	xxxx	xxxxx	xxxxx	xxxx	xxxxx
FollowUpTim:	xxxxx	xxxx	xxxxx	3.5	4.0	3.3	2.2	xxxx	xxxxx	xxxxx	xxxx	xxxxx
Capacity Module:												
Cnflict Vol:	xxxx	xxxx	xxxxx	482	482	153	241	xxxx	xxxxx	xxxx	xxxx	xxxxx
Potent Cap.:	xxxx	xxxx	xxxxx	547	487	898	1338	xxxx	xxxxx	xxxx	xxxx	xxxxx
Move Cap.:	xxxx	xxxx	xxxxx	523	459	898	1338	xxxx	xxxxx	xxxx	xxxx	xxxxx
Total Cap:	409	471	xxxxx	582	513	xxxxx	xxxx	xxxx	xxxxx	xxxx	xxxx	xxxxx
Volume/Cap:	xxxx	xxxx	xxxx	0.66	0.00	0.21	0.06	xxxx	xxxx	xxxx	xxxx	xxxx
Level Of Service Module:												
2Way95thQ:	xxxx	xxxx	xxxxx	xxxx	xxxx	xxxxx	0.2	xxxx	xxxxx	xxxx	xxxx	xxxxx
Control Del:	xxxxx	xxxx	xxxxx	xxxxx	xxxx	xxxxx	7.9	xxxx	xxxxx	xxxxx	xxxx	xxxxx
LOS by Move:	*	*	*	*	*	*	A	*	*	*	*	*
Movement:	LT - LTR - RT			LT - LTR - RT			LT - LTR - RT			LT - LTR - RT		
Shared Cap.:	xxxx	xxxx	xxxxx	xxxx	658	xxxxx	xxxx	xxxx	xxxxx	xxxx	xxxx	xxxxx
SharedQueue:	xxxxx	xxxx	xxxxx	xxxxx	10.4	xxxxx	xxxxx	xxxx	xxxxx	xxxxx	xxxx	xxxxx
Shrd ConDel:	xxxxx	xxxx	xxxxx	xxxxx	36.4	xxxxx	xxxxx	xxxx	xxxxx	xxxxx	xxxx	xxxxx
Shared LOS:	*	*	*	*	E	*	*	*	*	*	*	*
ApproachDel:	xxxxxx				36.4		xxxxxx			xxxxxx		
ApproachLOS:	*				E		*			*		

Note: Queue reported is the number of cars per lane.

Church of the Woods
Opening Year (2008) With Project Traffic Conditions
Sunday Peak Hour

Level Of Service Computation Report
2000 HCM 4-Way Stop Method (Base Volume Alternative)

Intersection #4 Daley Canyon Road/State Route 189

Cycle (sec):	100	Critical Vol./Cap.(X):	0.833
Loss Time (sec):	0 (Y+R=4.0 sec)	Average Delay (sec/veh):	24.9
Optimal Cycle:	0	Level Of Service:	C

Approach:	North Bound				South Bound				East Bound				West Bound			
Movement:	L	- T	- R		L	- T	- R		L	- T	- R		L	- T	- R	
Control:	Stop Sign				Stop Sign				Stop Sign				Stop Sign			
Rights:	Include				Include				Include				Include			
Min. Green:	10	10	10	10	10	10	10	10	10	10	10	10	10	10	10	10
Lanes:	0	1	0	0	0	0	0	0	1	0	0	0	1!	0	0	0
Volume Module:																
Base Vol:	145	204	0	0	318	40	187	0	303	0	0	0				
Growth Adj:	1.00	1.00	1.00	1.00	1.00	1.00	1.00	1.00	1.00	1.00	1.00	1.00				
Initial Bse:	145	204	0	0	318	40	187	0	303	0	0	0				
User Adj:	1.00	1.00	1.00	1.00	1.00	1.00	1.00	1.00	1.00	1.00	1.00	1.00				
PHF Adj:	0.86	0.86	0.86	0.87	0.87	0.87	0.96	0.96	0.96	1.00	1.00	1.00				
PHF Volume:	169	237	0	0	367	46	195	0	315	0	0	0				
Reduct Vol:	0	0	0	0	0	0	0	0	0	0	0	0				
Reduced Vol:	169	237	0	0	367	46	195	0	315	0	0	0				
PCE Adj:	1.00	1.00	1.00	1.00	1.00	1.00	1.00	1.00	1.00	1.00	1.00	1.00				
MLF Adj:	1.00	1.00	1.00	1.00	1.00	1.00	1.00	1.00	1.00	1.00	1.00	1.00				
FinalVolume:	169	237	0	0	367	46	195	0	315	0	0	0				
Saturation Flow Module:																
Adjustment:	1.00	1.00	1.00	1.00	1.00	1.00	1.00	1.00	1.00	1.00	1.00	1.00				
Lanes:	0.42	0.58	0.00	0.00	0.89	0.11	0.38	0.01	0.61	0.00	0.00	0.00				
Final Sat.:	234	329	0	0	512	64	234	0	378	0	0	0				
Capacity Analysis Module:																
Vol/Sat:	0.72	0.72	xxxx	xxxx	0.72	0.72	0.83	0.00	0.83	xxxx	xxxx	xxxx				
Crit Moves:	****				****				****							
Delay/Veh:	22.5	22.5	0.0	0.0	21.9	21.9	29.3	29.3	29.3	0.0	0.0	0.0				
Delay Adj:	1.00	1.00	1.00	1.00	1.00	1.00	1.00	1.00	1.00	1.00	1.00	1.00				
AdjDel/Veh:	22.5	22.5	0.0	0.0	21.9	21.9	29.3	29.3	29.3	0.0	0.0	0.0				
LOS by Move:	C	C	*	*	C	C	D	D	D	*	*	*				
ApproachDel:	22.5				21.9			29.3			xxxxxx					
Delay Adj:	1.00				1.00			1.00			xxxxx					
ApprAdjDel:	22.5				21.9			29.3			xxxxxx					
LOS by Appr:	C				C			D			*					
AllWayAvgQ:	2.1	2.1	2.1	2.0	2.0	2.0	3.5	3.5	3.5	0.0	0.0	0.0				

Note: Queue reported is the number of cars per lane.

Church of the Woods
Opening Year (2008) With Project Traffic Conditions
Sunday Peak Hour

Level Of Service Computation Report
2000 HCM 4-Way Stop Method (Base Volume Alternative)

Intersection #5 North Bay Road/State Route 189

Cycle (sec):	100	Critical Vol./Cap.(X):	0.569
Loss Time (sec):	0 (Y+R=4.0 sec)	Average Delay (sec/veh):	15.0
Optimal Cycle:	0	Level Of Service:	B

Approach:	North Bound			South Bound			East Bound			West Bound		
Movement:	L -	T -	R	L -	T -	R	L -	T -	R	L -	T -	R
Control:	Stop Sign			Stop Sign			Stop Sign			Stop Sign		
Rights:	Include			Include			Include			Include		
Min. Green:	10	10	10	10	10	10	10	10	10	10	10	10
Lanes:	0 0	0 0	0	1 0	0 0	1	1 0	1 0	0	0 0	0 1	0
Volume Module:												
Base Vol:	0	0	0	75	0	261	191	223	0	0	217	82
Growth Adj:	1.00	1.00	1.00	1.00	1.00	1.00	1.00	1.00	1.00	1.00	1.00	1.00
Initial Bse:	0	0	0	75	0	261	191	223	0	0	217	82
User Adj:	1.00	1.00	1.00	1.00	1.00	1.00	1.00	1.00	1.00	1.00	1.00	1.00
PHF Adj:	1.00	1.00	1.00	0.78	0.78	0.78	0.81	0.81	0.81	0.90	0.90	0.90
PHF Volume:	0	0	0	97	0	336	237	276	0	0	242	91
Reduct Vol:	0	0	0	0	0	0	0	0	0	0	0	0
Reduced Vol:	0	0	0	97	0	336	237	276	0	0	242	91
PCE Adj:	1.00	1.00	1.00	1.00	1.00	1.00	1.00	1.00	1.00	1.00	1.00	1.00
MLF Adj:	1.00	1.00	1.00	1.00	1.00	1.00	1.00	1.00	1.00	1.00	1.00	1.00
FinalVolume:	0	0	0	97	0	336	237	276	0	0	242	91
Saturation Flow Module:												
Adjustment:	1.00	1.00	1.00	1.00	1.00	1.00	1.00	1.00	1.00	1.00	1.00	1.00
Lanes:	0.00	0.00	0.00	1.00	0.00	1.00	1.00	1.00	0.00	0.00	0.73	0.27
Final Sat.:	0	0	0	494	0	592	525	567	0	0	425	161
Capacity Analysis Module:												
Vol/Sat:	xxxx	xxxx	xxxx	0.20	xxxx	0.57	0.45	0.49	xxxx	xxxx	0.57	0.57
Crit Moves:						****		****			****	
Delay/Veh:	0.0	0.0	0.0	11.4	0.0	15.5	14.6	14.4	0.0	0.0	16.3	16.3
Delay Adj:	1.00	1.00	1.00	1.00	1.00	1.00	1.00	1.00	1.00	1.00	1.00	1.00
AdjDel/Veh:	0.0	0.0	0.0	11.4	0.0	15.5	14.6	14.4	0.0	0.0	16.3	16.3
LOS by Move:	*	*	*	B	*	C	B	B	*	*	C	C
ApproachDel:	xxxxxx			14.6			14.5			16.3		
Delay Adj:	xxxxx			1.00			1.00			1.00		
ApprAdjDel:	xxxxxx			14.6			14.5			16.3		
LOS by Appr:	*			B			B			C		
AllWayAvgQ:	0.0	0.0	0.0	0.2	0.0	1.1	0.8	0.9	0.0	1.2	1.2	1.2

Note: Queue reported is the number of cars per lane.

Church of the Woods
Opening Year (2008) With Project Traffic Conditions
Sunday Peak Hour

Level Of Service Computation Report
2000 HCM Unsignalized Method (Base Volume Alternative)

Intersection #6 Lake Gregory Road/State Route 189

Average Delay (sec/veh): 10.1 Worst Case Level Of Service: D[25.0]

Approach:	North Bound					South Bound					East Bound					West Bound				
Movement:	L	-	T	-	R	L	-	T	-	R	L	-	T	-	R	L	-	T	-	R
Control:	Uncontrolled					Uncontrolled					Stop Sign					Stop Sign				
Rights:	Include					Include					Include					Include				
Lanes:	0	0	0	1	0	0	1	0	0	0	0	0	0	0	0	0	0	1!	0	0
Volume Module:																				
Base Vol:	0	145		40		65	167		0		0		0		0	154		0		75
Growth Adj:	1.00	1.00		1.00		1.00	1.00		1.00		1.00		1.00		1.00	1.00		1.00		1.00
Initial Bse:	0	145		40		65	167		0		0		0		0	154		0		75
User Adj:	1.00	1.00		1.00		1.00	1.00		1.00		1.00		1.00		1.00	1.00		1.00		1.00
PHF Adj:	0.81	0.81		0.81		0.69	0.69		0.69		1.00		1.00		1.00	0.69		0.69		0.69
PHF Volume:	0	179		49		94	242		0		0		0		0	224		0		109
Reduct Vol:	0	0		0		0	0		0		0		0		0	0		0		0
FinalVolume:	0	179		49		94	242		0		0		0		0	224		0		109
Critical Gap Module:																				
Critical Gp:	xxxxx	xxxx		xxxxx		4.1	xxxx		xxxxx		xxxxx		xxxx		xxxxx	6.4		6.5		6.2
FollowUpTim:	xxxxx	xxxx		xxxxx		2.2	xxxx		xxxxx		xxxxx		xxxx		xxxxx	3.5		4.0		3.3
Capacity Module:																				
Cnflict Vol:	xxxx	xxxx		xxxxx		229	xxxx		xxxxx		xxxx		xxxx		xxxxx	634		634		204
Potent Cap.:	xxxx	xxxx		xxxxx		1351	xxxx		xxxxx		xxxx		xxxx		xxxxx	446		399		842
Move Cap.:	xxxx	xxxx		xxxxx		1351	xxxx		xxxxx		xxxx		xxxx		xxxxx	421		370		842
Volume/Cap:	xxxx	xxxx		xxxx		0.07	xxxx		xxxx		xxxx		xxxx		xxxx	0.53		0.00		0.13
Level Of Service Module:																				
2Way95thQ:	xxxx	xxxx		xxxxx		0.2	xxxx		xxxxx		xxxx		xxxx		xxxxx	xxxx		xxxx		xxxxx
Control Del:	xxxxx	xxxx		xxxxx		7.9	xxxx		xxxxx		xxxxx		xxxx		xxxxx	xxxxx		xxxx		xxxxx
LOS by Move:	*	*		*		A	*		*		*		*		*	*		*		*
Movement:	LT	-	LTR	-	RT	LT	-	LTR	-	RT	LT	-	LTR	-	RT	LT	-	LTR	-	RT
Shared Cap.:	xxxx	xxxx		xxxxx		xxxx	xxxx		xxxxx		xxxx		xxxx		xxxxx	xxxx		503		xxxxx
SharedQueue:	xxxxx	xxxx		xxxxx		0.2	xxxx		xxxxx		xxxxx		xxxx		xxxxx	xxxxx		4.8		xxxxx
Shrd ConDel:	xxxxx	xxxx		xxxxx		7.9	xxxx		xxxxx		xxxxx		xxxx		xxxxx	xxxxx		25.0		xxxxx
Shared LOS:	*	*		*		A	*		*		*		*		*	*		D		*
ApproachDel:	xxxxxx					xxxxxx					xxxxxx					25.0				
ApproachLOS:	*					*					*					D				

Note: Queue reported is the number of cars per lane.

Church of the Woods
Opening Year (2008) With Project Traffic Conditions
Sunday Peak Hour

Level Of Service Computation Report
2000 HCM Unsignalized Method (Base Volume Alternative)

Intersection #7 Lake Gregory Drive/State Route 18

Average Delay (sec/veh): 4.6 Worst Case Level Of Service: C[17.6]

Approach:	North Bound			South Bound			East Bound			West Bound		
Movement:	L	T	R	L	T	R	L	T	R	L	T	R
Control:	Stop Sign			Stop Sign			Uncontrolled			Uncontrolled		
Rights:	Include			Include			Include			Include		
Lanes:	0 0 0 0 0			1 0 0 0 1			1 0 1 0 0			0 0 1 0 1		
Volume Module:												
Base Vol:	0	0	0	165	0	156	55	280	0	0	516	130
Growth Adj:	1.00	1.00	1.00	1.00	1.00	1.00	1.00	1.00	1.00	1.00	1.00	1.00
Initial Bse:	0	0	0	165	0	156	55	280	0	0	516	130
User Adj:	1.00	1.00	1.00	1.00	1.00	1.00	1.00	1.00	1.00	1.00	1.00	1.00
PHF Adj:	1.00	1.00	1.00	0.89	0.89	0.89	0.92	0.92	0.92	0.84	0.84	0.84
PHF Volume:	0	0	0	185	0	175	60	303	0	0	616	155
Reduct Vol:	0	0	0	0	0	0	0	0	0	0	0	0
FinalVolume:	0	0	0	185	0	175	60	303	0	0	616	155
Critical Gap Module:												
Critical Gp:	xxxxx	xxxx	xxxxx	6.4	xxxx	6.2	4.1	xxxx	xxxxx	xxxxx	xxxx	xxxxx
FollowUpTim:	xxxxx	xxxx	xxxxx	3.5	xxxx	3.3	2.2	xxxx	xxxxx	xxxxx	xxxx	xxxxx
Capacity Module:												
Cnflict Vol:	xxxx	xxxx	xxxxx	1039	xxxx	616	772	xxxx	xxxxx	xxxx	xxxx	xxxxx
Potent Cap.:	xxxx	xxxx	xxxxx	258	xxxx	494	852	xxxx	xxxxx	xxxx	xxxx	xxxxx
Move Cap.:	xxxx	xxxx	xxxxx	244	xxxx	494	852	xxxx	xxxxx	xxxx	xxxx	xxxxx
Total Cap:	180	312	xxxxx	441	393	xxxxx	xxxx	xxxx	xxxxx	xxxx	xxxx	xxxxx
Volume/Cap:	xxxx	xxxx	xxxx	0.42	xxxx	0.35	0.07	xxxx	xxxx	xxxx	xxxx	xxxx
Level Of Service Module:												
2Way95thQ:	xxxx	xxxx	xxxxx	2.0	xxxx	1.6	0.2	xxxx	xxxxx	xxxx	xxxx	xxxxx
Control Del:	xxxxx	xxxx	xxxxx	19.0	xxxx	16.2	9.5	xxxx	xxxxx	xxxxx	xxxx	xxxxx
LOS by Move:	*	*	*	C	*	C	A	*	*	*	*	*
Movement:	LT	LTR	RT	LT	LTR	RT	LT	LTR	RT	LT	LTR	RT
Shared Cap.:	xxxx	xxxx	xxxxx	xxxx	xxxx	xxxxx	xxxx	xxxx	xxxxx	xxxx	xxxx	xxxxx
SharedQueue:	xxxxx	xxxx	xxxxx	xxxxx	xxxx	xxxxx	xxxxx	xxxx	xxxxx	xxxxx	xxxx	xxxxx
Shrd ConDel:	xxxxx	xxxx	xxxxx	xxxxx	xxxx	xxxxx	xxxxx	xxxx	xxxxx	xxxxx	xxxx	xxxxx
Shared LOS:	*	*	*	*	*	*	*	*	*	*	*	*
ApproachDel:	xxxxxx			17.6			xxxxxx			xxxxxx		
ApproachLOS:	*			C			*			*		

Note: Queue reported is the number of cars per lane.

Church of the Woods
Opening Year (2008) With Project Traffic Conditions
Sunday Peak Hour

Level Of Service Computation Report
2000 HCM Unsignalized Method (Base Volume Alternative)

Intersection #8 Bear Springs Road/State Route 18

Average Delay (sec/veh): 3.6 Worst Case Level Of Service: D[30.3]

Approach:	North Bound						South Bound						East Bound						West Bound					
Movement:	L	-	T	-	R		L	-	T	-	R		L	-	T	-	R		L	-	T	-	R	
Control:	Stop Sign						Stop Sign						Uncontrolled						Uncontrolled					
Rights:	Include						Include						Include						Include					
Lanes:	0	0	1!	0	0		0	0	1!	0	0		1	0	0	1	0		1	0	0	1	0	
Volume Module:																								
Base Vol:	16		0		16		31		3		20		17		550		14		11		596		32	
Growth Adj:	1.00	1.00		1.00		1.00		1.00		1.00		1.00	1.00	1.00		1.00		1.00	1.00	1.00		1.00		1.00
Initial Bse:	16		0		16		31		3		20		17		550		14		11		596		32	
User Adj:	1.00	1.00		1.00		1.00		1.00		1.00		1.00	1.00	1.00		1.00		1.00	1.00	1.00		1.00		1.00
PHF Adj:	0.50	0.50		0.50		0.40		0.40		0.40		0.89	0.89		0.89		0.83	0.83		0.83				
PHF Volume:	32		0		32		78		8		50		19		618		16		13		717		39	
Reduct Vol:	0		0		0		0		0		0		0		0		0		0		0		0	
FinalVolume:	32		0		32		78		8		50		19		618		16		13		717		39	
Critical Gap Module:																								
Critical Gp:	7.1	6.5		6.2		7.1	6.5		6.2			4.1	xxxx	xxxxx			4.1	xxxx	xxxxx					
FollowUpTim:	3.5	4.0		3.3		3.5	4.0		3.3			2.2	xxxx	xxxxx			2.2	xxxx	xxxxx					
Capacity Module:																								
Cnflict Vol:	1456	1446		626		1443	1435		736			756	xxxx	xxxxx			634	xxxx	xxxxx					
Potent Cap.:	109	133		488		111	135		422			864	xxxx	xxxxx			959	xxxx	xxxxx					
Move Cap.:	89	128		488		101	130		422			864	xxxx	xxxxx			959	xxxx	xxxxx					
Total Cap:	205	247		xxxxx		226	252		xxxxx			xxxx	xxxx	xxxxx			xxxx	xxxx	xxxxx					
Volume/Cap:	0.16	0.00		0.07		0.35	0.03		0.12			0.02	xxxx		xxxx		0.01	xxxx		xxxx				
Level Of Service Module:																								
2Way95thQ:	xxxx	xxxx		xxxxx		xxxx	xxxx		xxxxx			0.1	xxxx	xxxxx			0.0	xxxx	xxxxx					
Control Del:	xxxxx	xxxx		xxxxx		xxxxx	xxxx		xxxxx			9.3	xxxx	xxxxx			8.8	xxxx	xxxxx					
LOS by Move:	*	*		*		*	*		*			A	*		*		A	*		*				
Movement:	LT	-	LTR	-	RT		LT	-	LTR	-	RT		LT	-	LTR	-	RT		LT	-	LTR	-	RT	
Shared Cap.:	xxxx		289		xxxxx		xxxx		275		xxxxx		xxxx	xxxx	xxxxx		xxxx	xxxx	xxxxx					
SharedQueue:	xxxxx		0.8		xxxxx		xxxxx		2.6		xxxxx		xxxxx	xxxx	xxxxx		xxxxx	xxxx	xxxxx					
Shrd ConDel:	xxxxx		21.0		xxxxx		xxxxx		30.3		xxxxx		xxxxx	xxxx	xxxxx		xxxxx	xxxx	xxxxx					
Shared LOS:	*		C		*		*		D		*		*	*			*	*		*				
ApproachDel:			21.0						30.3					xxxxxx					xxxxxx					
ApproachLOS:			C						D					*					*					

Note: Queue reported is the number of cars per lane.

Church of the Woods
Opening Year (2008) With Project Traffic Conditions
Sunday Peak Hour

Level Of Service Computation Report
2000 HCM Unsignalized Method (Base Volume Alternative)

Intersection #9 Project Access/State Route 18

Average Delay (sec/veh): 2.4 Worst Case Level Of Service: C[19.0]

Approach:	North Bound			South Bound			East Bound			West Bound		
Movement:	L	T	R	L	T	R	L	T	R	L	T	R
Control:	Stop Sign			Stop Sign			Uncontrolled			Uncontrolled		
Rights:	Include			Include			Include			Include		
Lanes:	0 0 0 0 0			1 0 0 0 1			1 0 1 0 0			0 0 1 0 1		
Volume Module:												
Base Vol:	0	0	0	109	0	58	58	473	0	0	673	109
Growth Adj:	1.00	1.00	1.00	1.00	1.00	1.00	1.00	1.00	1.00	1.00	1.00	1.00
Initial Bse:	0	0	0	109	0	58	58	473	0	0	673	109
User Adj:	1.00	1.00	1.00	1.00	1.00	1.00	1.00	1.00	1.00	1.00	1.00	1.00
PHF Adj:	1.00	1.00	1.00	0.95	0.95	0.95	0.95	0.85	1.00	1.00	0.89	0.95
PHF Volume:	0	0	0	115	0	61	61	556	0	0	760	115
Reduct Vol:	0	0	0	0	0	0	0	0	0	0	0	0
FinalVolume:	0	0	0	115	0	61	61	556	0	0	760	115
Critical Gap Module:												
Critical Gp:	xxxxx	xxxx	xxxxx	6.4	xxxx	6.2	4.1	xxxx	xxxxx	xxxxx	xxxx	xxxxx
FollowUpTim:	xxxxx	xxxx	xxxxx	3.5	xxxx	3.3	2.2	xxxx	xxxxx	xxxxx	xxxx	xxxxx
Capacity Module:												
Cnflict Vol:	xxxx	xxxx	xxxxx	1438	xxxx	760	874	xxxx	xxxxx	xxxx	xxxx	xxxxx
Potent Cap.:	xxxx	xxxx	xxxxx	148	xxxx	409	780	xxxx	xxxxx	xxxx	xxxx	xxxxx
Move Cap.:	xxxx	xxxx	xxxxx	139	xxxx	409	780	xxxx	xxxxx	xxxx	xxxx	xxxxx
Total Cap:	209	254	xxxxx	340	304	xxxxx	xxxx	xxxx	xxxxx	xxxx	xxxx	xxxxx
Volume/Cap:	xxxx	xxxx	xxxx	0.34	xxxx	0.15	0.08	xxxx	xxxx	xxxx	xxxx	xxxx
Level Of Service Module:												
2Way95thQ:	xxxx	xxxx	xxxxx	1.5	xxxx	0.5	0.3	xxxx	xxxxx	xxxx	xxxx	xxxxx
Control Del:	xxxxx	xxxx	xxxxx	20.9	xxxx	15.3	10.0	xxxx	xxxxx	xxxxx	xxxx	xxxxx
LOS by Move:	*	*	*	C	*	C	B	*	*	*	*	*
Movement:	LT	LTR	RT	LT	LTR	RT	LT	LTR	RT	LT	LTR	RT
Shared Cap.:	xxxx	xxxx	xxxxx	xxxx	xxxx	xxxxx	xxxx	xxxx	xxxxx	xxxx	xxxx	xxxxx
SharedQueue:	xxxxx	xxxx	xxxxx	xxxxx	xxxx	xxxxx	xxxxx	xxxx	xxxxx	xxxxx	xxxx	xxxxx
Shrd ConDel:	xxxxx	xxxx	xxxxx	xxxxx	xxxx	xxxxx	xxxxx	xxxx	xxxxx	xxxxx	xxxx	xxxxx
Shared LOS:	*	*	*	*	*	*	*	*	*	*	*	*
ApproachDel:	xxxxxx			19.0			xxxxxx			xxxxxx		
ApproachLOS:	*			C			*			*		

Note: Queue reported is the number of cars per lane.

Church of the Woods
Opening Year (2008) With Project Traffic Conditions
Sunday Peak Hour

Level Of Service Computation Report
2000 HCM Unsignalized Method (Base Volume Alternative)

Intersection #10 Daley Canyon Road/State Route 18

Average Delay (sec/veh): 14.4 Worst Case Level Of Service: E[36.0]

Approach:	North Bound					South Bound					East Bound					West Bound				
Movement:	L	-	T	-	R	L	-	T	-	R	L	-	T	-	R	L	-	T	-	R
Control:	Stop Sign					Stop Sign					Uncontrolled					Uncontrolled				
Rights:	Include					Include					Include					Include				
Lanes:	0	0	0	0	0	0	0	0	0	1	1	0	1	0	0	0	0	1	0	0
Volume Module:																				
Base Vol:	0	0	0	0	0	0	0	0	0	440	271	311	0	0	0	0	0	342	0	0
Growth Adj:	1.00	1.00	1.00	1.00	1.00	1.00	1.00	1.00	1.00	1.00	1.00	1.00	1.00	1.00	1.00	1.00	1.00	1.00	1.00	1.00
Initial Bse:	0	0	0	0	0	0	0	0	0	440	271	311	0	0	0	0	0	342	0	0
User Adj:	1.00	1.00	1.00	1.00	1.00	1.00	1.00	1.00	1.00	1.00	1.00	1.00	1.00	1.00	1.00	1.00	1.00	1.00	1.00	1.00
PHF Adj:	1.00	1.00	1.00	1.00	1.00	1.00	1.00	1.00	1.00	0.76	0.86	0.85	1.00	1.00	1.00	1.00	1.00	0.89	1.00	1.00
PHF Volume:	0	0	0	0	0	0	0	0	0	581	317	365	0	0	0	0	0	386	0	0
Reduct Vol:	0	0	0	0	0	0	0	0	0	0	0	0	0	0	0	0	0	0	0	0
FinalVolume:	0	0	0	0	0	0	0	0	0	581	317	365	0	0	0	0	0	386	0	0
Critical Gap Module:																				
Critical Gp:	xxxxx	xxxx	xxxxx	xxxxx	xxxx					6.2		4.1	xxxx	xxxxx	xxxxx	xxxx	xxxxx			
FollowUpTim:	xxxxx	xxxx	xxxxx	xxxxx	xxxx					3.3		2.2	xxxx	xxxxx	xxxxx	xxxx	xxxxx			
Capacity Module:																				
Cnflict Vol:	xxxx	xxxx	xxxxx	xxxx	xxxx					386		386	xxxx	xxxxx	xxxx	xxxx	xxxxx			
Potent Cap.:	xxxx	xxxx	xxxxx	xxxx	xxxx					666		1184	xxxx	xxxxx	xxxx	xxxx	xxxxx			
Move Cap.:	xxxx	xxxx	xxxxx	xxxx	xxxx					666		1184	xxxx	xxxxx	xxxx	xxxx	xxxxx			
Volume/Cap:	xxxx	xxxx	xxxx	xxxx	xxxx					0.87		0.27	xxxx	xxxx	xxxx	xxxx	xxxx			
Level Of Service Module:																				
2Way95thQ:	xxxx	xxxx	xxxxx	xxxx	xxxx					10.4		1.1	xxxx	xxxxx	xxxx	xxxx	xxxxx			
Control Del:	xxxxx	xxxx	xxxxx	xxxxx	xxxx					36.0		9.1	xxxx	xxxxx	xxxxx	xxxx	xxxxx			
LOS by Move:	*	*	*	*	*					E		A	*	*	*	*	*			
Movement:	LT	-	LTR	-	RT	LT	-	LTR	-	RT	LT	-	LTR	-	RT	LT	-	LTR	-	RT
Shared Cap.:	xxxx	xxxx	xxxxx	xxxx	xxxx	xxxxx					xxxx	xxxx	xxxxx	xxxx	xxxx	xxxxx				
SharedQueue:	xxxxx	xxxx	xxxxx	xxxxx	xxxx	xxxxx					xxxxx	xxxx	xxxxx	xxxxx	xxxx	xxxxx				
Shrd ConDel:	xxxxx	xxxx	xxxxx	xxxxx	xxxx	xxxxx					xxxxx	xxxx	xxxxx	xxxxx	xxxx	xxxxx				
Shared LOS:	*	*	*	*	*	*					*	*	*	*	*	*				
ApproachDel:	xxxxxx					36.0					xxxxxx					xxxxxx				
ApproachLOS:	*					E					*					*				

Note: Queue reported is the number of cars per lane.

Church of the Woods
Opening Year (2008) With Project Traffic Conditions
Sunday Peak Hour

Level Of Service Computation Report
2000 HCM Unsignalized Method (Base Volume Alternative)

Intersection #11 Daley Canyon Road/Daley Canyon Access Road

Average Delay (sec/veh): 4.4 Worst Case Level Of Service: B[13.2]

Approach:	North Bound			South Bound			East Bound			West Bound		
Movement:	L -	T -	R	L -	T -	R	L -	T -	R	L -	T -	R
Control:	Uncontrolled			Uncontrolled			Stop Sign			Stop Sign		
Rights:	Include			Include			Include			Include		
Lanes:	0 0 1	0	0	0 1	0 0	0	0 0 0	0	0	0 0 0	0	1
Volume Module:												
Base Vol:	0 271	0		186 440	0		0 0	0		0 0	0	149
Growth Adj:	1.00 1.00	1.00		1.00 1.00	1.00		1.00 1.00	1.00		1.00 1.00	1.00	
Initial Bse:	0 271	0		186 440	0		0 0	0		0 0	0	149
User Adj:	1.00 1.00	1.00		1.00 1.00	1.00		1.00 1.00	1.00		1.00 1.00	1.00	
PHF Adj:	1.00 0.86	1.00		0.60 0.76	1.00		1.00 1.00	1.00		1.00 1.00	0.52	
PHF Volume:	0 317	0		308 581	0		0 0	0		0 0	0	289
Reduct Vol:	0 0	0		0 0	0		0 0	0		0 0	0	0
FinalVolume:	0 317	0		308 581	0		0 0	0		0 0	0	289
Critical Gap Module:												
Critical Gp:	xxxxx xxxx	xxxxx		4.1 xxxx	xxxxx		xxxxx xxxx	xxxxx		xxxxx xxxx		6.2
FollowUpTim:	xxxxx xxxx	xxxxx		2.2 xxxx	xxxxx		xxxxx xxxx	xxxxx		xxxxx xxxx		3.3
Capacity Module:												
Cnflict Vol:	xxxx xxxx	xxxxx		317 xxxx	xxxxx		xxxx xxxx	xxxxx		xxxx xxxx		317
Potent Cap.:	xxxx xxxx	xxxxx		1255 xxxx	xxxxx		xxxx xxxx	xxxxx		xxxx xxxx		729
Move Cap.:	xxxx xxxx	xxxxx		1255 xxxx	xxxxx		xxxx xxxx	xxxxx		xxxx xxxx		729
Volume/Cap:	xxxx xxxx	xxxx		0.25 xxxx	xxxx		xxxx xxxx	xxxx		xxxx xxxx		0.40
Level Of Service Module:												
2Way95thQ:	xxxx xxxx	xxxxx		1.0 xxxx	xxxxx		xxxx xxxx	xxxxx		xxxx xxxx		1.9
Control Del:	xxxxx xxxx	xxxxx		8.8 xxxx	xxxxx		xxxxx xxxx	xxxxx		xxxxx xxxx		13.2
LOS by Move:	* *	*		A *	*		* *	*		* *	*	B
Movement:	LT - LTR	- RT		LT - LTR	- RT		LT - LTR	- RT		LT - LTR	- RT	
Shared Cap.:	xxxx xxxx	xxxxx		xxxx xxxx	xxxxx		xxxx xxxx	xxxxx		xxxx xxxx		xxxxx
SharedQueue:	xxxxx xxxx	xxxxx		1.0 xxxx	xxxxx		xxxxx xxxx	xxxxx		xxxxx xxxx		xxxxx
Shrd ConDel:	xxxxx xxxx	xxxxx		8.8 xxxx	xxxxx		xxxxx xxxx	xxxxx		xxxxx xxxx		xxxxx
Shared LOS:	* *	*		A *	*		* *	*		* *	*	*
ApproachDel:	xxxxxx			xxxxxx			xxxxxx			13.2		
ApproachLOS:	*			*			*			B		

Note: Queue reported is the number of cars per lane.

Church of the Woods
Opening Year (2008) With Project Traffic Conditions
Sunday Peak Hour

Level Of Service Computation Report
2000 HCM Unsignalized Method (Base Volume Alternative)

Intersection #12 Daley Canyon Access Road/State Route 18

Average Delay (sec/veh): 10.1 Worst Case Level Of Service: E[44.2]

Approach:	North Bound					South Bound					East Bound					West Bound				
Movement:	L	-	T	-	R	L	-	T	-	R	L	-	T	-	R	L	-	T	-	R
Control:	Stop Sign					Stop Sign					Uncontrolled					Uncontrolled				
Rights:	Include					Include					Include					Include				
Lanes:	0	0	0	0	0	1	0	0	0	0	0	0	1	0	0	0	0	1	0	1
Volume Module:																				
Base Vol:	0	0	0			186	0	0			0	311	0			0	342	149		
Growth Adj:	1.00	1.00	1.00			1.00	1.00	1.00			1.00	1.00	1.00			1.00	1.00	1.00		
Initial Bse:	0	0	0			186	0	0			0	311	0			0	342	149		
User Adj:	1.00	1.00	1.00			1.00	1.00	1.00			1.00	1.00	1.00			1.00	1.00	1.00		
PHF Adj:	1.00	1.00	1.00			0.60	1.00	1.00			1.00	0.85	1.00			1.00	0.89	0.52		
PHF Volume:	0	0	0			308	0	0			0	365	0			0	386	289		
Reduct Vol:	0	0	0			0	0	0			0	0	0			0	0	0		
FinalVolume:	0	0	0			308	0	0			0	365	0			0	386	289		
Critical Gap Module:																				
Critical Gp:	xxxxx	xxxx	xxxxx			6.4	xxxx	xxxxx			xxxxx	xxxx	xxxxx			xxxxx	xxxx	xxxxx		
FollowUpTim:	xxxxx	xxxx	xxxxx			3.5	xxxx	xxxxx			xxxxx	xxxx	xxxxx			xxxxx	xxxx	xxxxx		
Capacity Module:																				
Cnflict Vol:	xxxx	xxxx	xxxxx			751	xxxx	xxxxx			xxxx	xxxx	xxxxx			xxxx	xxxx	xxxxx		
Potent Cap.:	xxxx	xxxx	xxxxx			381	xxxx	xxxxx			xxxx	xxxx	xxxxx			xxxx	xxxx	xxxxx		
Move Cap.:	xxxx	xxxx	xxxxx			381	xxxx	xxxxx			xxxx	xxxx	xxxxx			xxxx	xxxx	xxxxx		
Volume/Cap:	xxxx	xxxx	xxxx			0.81	xxxx	xxxx			xxxx	xxxx	xxxx			xxxx	xxxx	xxxx		
Level Of Service Module:																				
2Way95thQ:	xxxx	xxxx	xxxxx			7.1	xxxx	xxxxx			xxxx	xxxx	xxxxx			xxxx	xxxx	xxxxx		
Control Del:	xxxxx	xxxx	xxxxx			44.2	xxxx	xxxxx			xxxxx	xxxx	xxxxx			xxxxx	xxxx	xxxxx		
LOS by Move:	*	*	*			E	*	*			*	*	*			*	*	*		
Movement:	LT	-	LTR	-	RT	LT	-	LTR	-	RT	LT	-	LTR	-	RT	LT	-	LTR	-	RT
Shared Cap.:	xxxx	xxxx	xxxxx			xxxx	xxxx	xxxxx			xxxx	xxxx	xxxxx			xxxx	xxxx	xxxxx		
SharedQueue:	xxxxx	xxxx	xxxxx			xxxxx	xxxx	xxxxx			xxxxx	xxxx	xxxxx			xxxxx	xxxx	xxxxx		
Shrd ConDel:	xxxxx	xxxx	xxxxx			xxxxx	xxxx	xxxxx			xxxxx	xxxx	xxxxx			xxxxx	xxxx	xxxxx		
Shared LOS:	*	*	*			*	*	*			*	*	*			*	*	*		
ApproachDel:	xxxxxx					44.2					xxxxxx					xxxxxx				
ApproachLOS:	*					E					*					*				

Note: Queue reported is the number of cars per lane.

Church of the Woods
Opening Year (2008) With Project Traffic Conditions
Sunday Peak Hour

Level Of Service Computation Report
2000 HCM Unsignalized Method (Base Volume Alternative)

Intersection #13 State Route 173/State Route 18

Average Delay (sec/veh): 7.1 Worst Case Level Of Service: C[20.6]

Approach:	North Bound					South Bound					East Bound					West Bound				
Movement:	L	-	T	-	R	L	-	T	-	R	L	-	T	-	R	L	-	T	-	R
Control:	Stop Sign					Stop Sign					Uncontrolled					Uncontrolled				
Rights:	Include					Include					Include					Include				
Lanes:	0	0	0	0	0	0	0	1!	0	0	1	0	1	0	0	0	0	1	0	1
Volume Module:																				
Base Vol:	0	0	0	47	0	170	252	178	0	0	182	123								
Growth Adj:	1.00	1.00	1.00	1.00	1.00	1.00	1.00	1.00	1.00	1.00	1.00	1.00								
Initial Bse:	0	0	0	47	0	170	252	178	0	0	182	123								
User Adj:	1.00	1.00	1.00	1.00	1.00	1.00	1.00	1.00	1.00	1.00	1.00	1.00								
PHF Adj:	1.00	1.00	1.00	0.82	0.82	0.82	0.80	0.80	0.80	0.85	0.85	0.85								
PHF Volume:	0	0	0	57	0	206	316	223	0	0	215	145								
Reduct Vol:	0	0	0	0	0	0	0	0	0	0	0	0								
FinalVolume:	0	0	0	57	0	206	316	223	0	0	215	145								
Critical Gap Module:																				
Critical Gp:	xxxxx	xxxx	xxxxx	6.4	6.5	6.2	4.1	xxxx	xxxxx	xxxxx	xxxx	xxxxx								
FollowUpTim:	xxxxx	xxxx	xxxxx	3.5	4.0	3.3	2.2	xxxx	xxxxx	xxxxx	xxxx	xxxxx								
Capacity Module:																				
Cnflict Vol:	xxxx	xxxx	xxxxx	1069	1069	215	360	xxxx	xxxxx	xxxx	xxxx	xxxxx								
Potent Cap.:	xxxx	xxxx	xxxxx	247	223	830	1210	xxxx	xxxxx	xxxx	xxxx	xxxxx								
Move Cap.:	xxxx	xxxx	xxxxx	197	165	830	1210	xxxx	xxxxx	xxxx	xxxx	xxxxx								
Volume/Cap:	xxxx	xxxx	xxxx	0.29	0.00	0.25	0.26	xxxx	xxxx	xxxx	xxxx	xxxx								
Level Of Service Module:																				
2Way95thQ:	xxxx	xxxx	xxxxx	xxxx	xxxx	xxxxx	1.0	xxxx	xxxxx	xxxx	xxxx	xxxxx								
Control Del:	xxxxx	xxxx	xxxxx	xxxxx	xxxx	xxxxx	9.0	xxxx	xxxxx	xxxxx	xxxx	xxxxx								
LOS by Move:	*	*	*	*	*	*	A	*	*	*	*	*								
Movement:	LT	-	LTR	-	RT	LT	-	LTR	-	RT	LT	-	LTR	-	RT	LT	-	LTR	-	RT
Shared Cap.:	xxxx	xxxx	xxxxx	xxxx	490	xxxxx	xxxx	xxxx	xxxxx	xxxx	xxxx	xxxxx								
SharedQueue:	xxxxx	xxxx	xxxxx	xxxxx	3.1	xxxxx	xxxxx	xxxx	xxxxx	xxxxx	xxxx	xxxxx								
Shrd ConDel:	xxxxx	xxxx	xxxxx	xxxxx	20.6	xxxxx	xxxxx	xxxx	xxxxx	xxxxx	xxxx	xxxxx								
Shared LOS:	*	*	*	*	C	*	*	*	*	*	*	*								
ApproachDel:	xxxxxx				20.6		xxxxxx				xxxxxx									
ApproachLOS:	*				C		*				*									

Note: Queue reported is the number of cars per lane.

YEAR 2013 WITHOUT PROJECT CONDITIONS

Church of the Woods
Year 2013 Without Project Traffic Conditions
Saturday Peak Hour

Level Of Service Computation Report
2000 HCM Unsignalized Method (Base Volume Alternative)

Intersection #1 North Road/State Route 189

Average Delay (sec/veh): 9.6 Worst Case Level Of Service: D[25.7]

Approach:	North Bound			South Bound			East Bound			West Bound		
Movement:	L	T	R	L	T	R	L	T	R	L	T	R
Control:	Stop Sign			Stop Sign			Uncontrolled			Uncontrolled		
Rights:	Include			Include			Include			Include		
Lanes:	0 0 0 0 0			0 0 1! 0 0			0 1 0 0 0			0 0 0 1 0		
Volume Module:												
Base Vol:	0	0	0	187	0	57	42	176	0	0	169	155
Growth Adj:	1.00	1.00	1.00	1.00	1.00	1.00	1.00	1.00	1.00	1.00	1.00	1.00
Initial Bse:	0	0	0	187	0	57	42	176	0	0	169	155
User Adj:	1.00	1.00	1.00	1.00	1.00	1.00	1.00	1.00	1.00	1.00	1.00	1.00
PHF Adj:	1.00	1.00	1.00	0.71	0.71	0.71	0.82	0.82	0.82	0.90	0.90	0.90
PHF Volume:	0	0	0	263	0	80	51	214	0	0	187	172
Reduct Vol:	0	0	0	0	0	0	0	0	0	0	0	0
FinalVolume:	0	0	0	263	0	80	51	214	0	0	187	172
Critical Gap Module:												
Critical Gp:	xxxxx	xxxx	xxxxx	6.4	6.5	6.2	4.1	xxxx	xxxxx	xxxxx	xxxx	xxxxx
FollowUpTim:	xxxxx	xxxx	xxxxx	3.5	4.0	3.3	2.2	xxxx	xxxxx	xxxxx	xxxx	xxxxx
Capacity Module:												
Cnflict Vol:	xxxx	xxxx	xxxxx	589	589	273	359	xxxx	xxxxx	xxxx	xxxx	xxxxx
Potent Cap.:	xxxx	xxxx	xxxxx	474	424	771	1211	xxxx	xxxxx	xxxx	xxxx	xxxxx
Move Cap.:	xxxx	xxxx	xxxxx	459	405	771	1211	xxxx	xxxxx	xxxx	xxxx	xxxxx
Volume/Cap:	xxxx	xxxx	xxxx	0.57	0.00	0.10	0.04	xxxx	xxxx	xxxx	xxxx	xxxx
Level Of Service Module:												
2Way95thQ:	xxxx	xxxx	xxxxx	xxxx	xxxx	xxxxx	0.1	xxxx	xxxxx	xxxx	xxxx	xxxxx
Control Del:	xxxxx	xxxx	xxxxx	xxxxx	xxxx	xxxxx	8.1	xxxx	xxxxx	xxxxx	xxxx	xxxxx
LOS by Move:	*	*	*	*	*	*	A	*	*	*	*	*
Movement:	LT	LTR	RT	LT	LTR	RT	LT	LTR	RT	LT	LTR	RT
Shared Cap.:	xxxx	xxxx	xxxxx	xxxx	507	xxxxx	xxxx	xxxx	xxxxx	xxxx	xxxx	xxxxx
SharedQueue:	xxxxx	xxxx	xxxxx	xxxxx	5.0	xxxxx	0.1	xxxx	xxxxx	xxxxx	xxxx	xxxxx
Shrd ConDel:	xxxxx	xxxx	xxxxx	xxxxx	25.7	xxxxx	8.1	xxxx	xxxxx	xxxxx	xxxx	xxxxx
Shared LOS:	*	*	*	*	D	*	A	*	*	*	*	*
ApproachDel:	xxxxxx			25.7			xxxxxx			xxxxxx		
ApproachLOS:	*			D			*			*		

Note: Queue reported is the number of cars per lane.

Church of the Woods
Year 2013 Without Project Traffic Conditions
Saturday Peak Hour

Level Of Service Computation Report
2000 HCM Unsignalized Method (Base Volume Alternative)

Intersection #2 Bear Springs Road/State Route 189

Average Delay (sec/veh): 5.4 Worst Case Level Of Service: C[19.7]

Approach:	North Bound				South Bound				East Bound				West Bound			
Movement:	L	- T	- R		L	- T	- R		L	- T	- R		L	- T	- R	
Control:	Stop Sign				Stop Sign				Uncontrolled				Uncontrolled			
Rights:	Include				Include				Include				Include			
Lanes:	0	0	1!	0 0	0	0	1!	0 0	0	0	1!	0 0	0	0	1!	0 0
Volume Module:																
Base Vol:	23	16	16		39	12	68		73	232	36		12	229	36	
Growth Adj:	1.00	1.00	1.00		1.00	1.00	1.00		1.00	1.00	1.00		1.00	1.00	1.00	
Initial Bse:	23	16	16		39	12	68		73	232	36		12	229	36	
User Adj:	1.00	1.00	1.00		1.00	1.00	1.00		1.00	1.00	1.00		1.00	1.00	1.00	
PHF Adj:	0.66	0.66	0.66		0.80	0.80	0.80		0.86	0.86	0.86		0.91	0.91	0.91	
PHF Volume:	35	24	24		49	15	85		84	269	42		13	252	40	
Reduct Vol:	0	0	0		0	0	0		0	0	0		0	0	0	
FinalVolume:	35	24	24		49	15	85		84	269	42		13	252	40	
Critical Gap Module:																
Critical Gp:	7.1	6.5	6.2		7.1	6.5	6.2		4.1	xxxx	xxxxx		4.1	xxxx	xxxxx	
FollowUpTim:	3.5	4.0	3.3		3.5	4.0	3.3		2.2	xxxx	xxxxx		2.2	xxxx	xxxxx	
Capacity Module:																
Cnflict Vol:	807	777	289		781	778	272		292	xxxx	xxxxx		310	xxxx	xxxxx	
Potent Cap.:	302	330	755		314	330	771		1281	xxxx	xxxxx		1262	xxxx	xxxxx	
Move Cap.:	243	304	755		269	304	771		1281	xxxx	xxxxx		1262	xxxx	xxxxx	
Volume/Cap:	0.14	0.08	0.03		0.18	0.05	0.11		0.07	xxxx	xxxx		0.01	xxxx	xxxx	
Level Of Service Module:																
2Way95thQ:	xxxx	xxxx	xxxxx		xxxx	xxxx	xxxxx		0.2	xxxx	xxxxx		0.0	xxxx	xxxxx	
Control Del:	xxxxx	xxxx	xxxxx		xxxxx	xxxx	xxxxx		8.0	xxxx	xxxxx		7.9	xxxx	xxxxx	
LOS by Move:	*	*	*		*	*	*		A	*	*		A	*	*	
Movement:	LT	- LTR	- RT		LT	- LTR	- RT		LT	- LTR	- RT		LT	- LTR	- RT	
Shared Cap.:	xxxx	327	xxxxx		xxxx	436	xxxxx		xxxx	xxxx	xxxxx		xxxx	xxxx	xxxxx	
SharedQueue:	xxxxx	1.0	xxxxx		xxxxx	1.5	xxxxx		xxxxx	xxxx	xxxxx		xxxxx	xxxx	xxxxx	
Shrd ConDel:	xxxxx	19.7	xxxxx		xxxxx	17.5	xxxxx		xxxxx	xxxx	xxxxx		xxxxx	xxxx	xxxxx	
Shared LOS:	*	C	*		*	C	*		*	*	*		*	*	*	
ApproachDel:	19.7				17.5				xxxxxx				xxxxxx			
ApproachLOS:	C				C				*				*			

Note: Queue reported is the number of cars per lane.

Church of the Woods
Year 2013 Without Project Traffic Conditions
Saturday Peak Hour

Level Of Service Computation Report
2000 HCM Unsignalized Method (Base Volume Alternative)

Intersection #3 Grass Valley Road/State Route 189

Average Delay (sec/veh): 163.5 Worst Case Level Of Service: F[323.2]

Approach:	North Bound			South Bound			East Bound			West Bound		
Movement:	L	T	R	L	T	R	L	T	R	L	T	R
Control:	Stop Sign			Stop Sign			Uncontrolled			Uncontrolled		
Rights:	Include			Include			Include			Include		
Lanes:	0 0 0 0 0			0 0 1! 0 0			1 0 1 0 0			0 0 0 1 0		
Volume Module:												
Base Vol:	0	0	0	386	0	274	133	221	0	0	90	200
Growth Adj:	1.00	1.00	1.00	1.00	1.00	1.00	1.00	1.00	1.00	1.00	1.00	1.00
Initial Bse:	0	0	0	386	0	274	133	221	0	0	90	200
User Adj:	1.00	1.00	1.00	1.00	1.00	1.00	1.00	1.00	1.00	1.00	1.00	1.00
PHF Adj:	1.00	1.00	1.00	0.81	0.81	0.81	0.78	0.78	0.78	0.83	0.83	0.83
PHF Volume:	0	0	0	476	0	338	171	284	0	0	108	240
Reduct Vol:	0	0	0	0	0	0	0	0	0	0	0	0
FinalVolume:	0	0	0	476	0	338	171	284	0	0	108	240
Critical Gap Module:												
Critical Gp:	xxxxx	xxxx	xxxxx	6.4	6.5	6.2	4.1	xxxx	xxxxx	xxxxx	xxxx	xxxxx
FollowUpTim:	xxxxx	xxxx	xxxxx	3.5	4.0	3.3	2.2	xxxx	xxxxx	xxxxx	xxxx	xxxxx
Capacity Module:												
Cnflict Vol:	xxxx	xxxx	xxxxx	855	855	228	349	xxxx	xxxxx	xxxx	xxxx	xxxxx
Potent Cap.:	xxxx	xxxx	xxxxx	331	298	816	1222	xxxx	xxxxx	xxxx	xxxx	xxxxx
Move Cap.:	xxxx	xxxx	xxxxx	296	256	816	1222	xxxx	xxxxx	xxxx	xxxx	xxxxx
Total Cap:	164	298	xxxxx	384	340	xxxxx	xxxx	xxxx	xxxxx	xxxx	xxxx	xxxxx
Volume/Cap:	xxxx	xxxx	xxxx	1.24	0.00	0.41	0.14	xxxx	xxxx	xxxx	xxxx	xxxx
Level Of Service Module:												
2Way95thQ:	xxxx	xxxx	xxxxx	xxxx	xxxx	xxxxx	0.5	xxxx	xxxxx	xxxx	xxxx	xxxxx
Control Del:	xxxxx	xxxx	xxxxx	xxxxx	xxxx	xxxxx	8.4	xxxx	xxxxx	xxxxx	xxxx	xxxxx
LOS by Move:	*	*	*	*	*	*	A	*	*	*	*	*
Movement:	LT	LTR	RT	LT	LTR	RT	LT	LTR	RT	LT	LTR	RT
Shared Cap.:	xxxx	xxxx	xxxxx	xxxx	493	xxxxx	xxxx	xxxx	xxxxx	xxxx	xxxx	xxxxx
SharedQueue:	xxxxx	xxxx	xxxxx	xxxxx	46.7	xxxxx	xxxxx	xxxx	xxxxx	xxxxx	xxxx	xxxxx
Shrd ConDel:	xxxxx	xxxx	xxxxx	xxxxx	323	xxxxx	xxxxx	xxxx	xxxxx	xxxxx	xxxx	xxxxx
Shared LOS:	*	*	*	*	F	*	*	*	*	*	*	*
ApproachDel:	xxxxxx			323.2			xxxxxx			xxxxxx		
ApproachLOS:	*			F			*			*		

Note: Queue reported is the number of cars per lane.

Church of the Woods
Year 2013 Without Project Traffic Conditions
Saturday Peak Hour

Level Of Service Computation Report
2000 HCM 4-Way Stop Method (Base Volume Alternative)

Intersection #4 Daley Canyon Road/State Route 189

Cycle (sec):	100	Critical Vol./Cap.(X):	1.233
Loss Time (sec):	0 (Y+R=4.0 sec)	Average Delay (sec/veh):	107.7
Optimal Cycle:	0	Level Of Service:	F

Approach:	North Bound				South Bound				East Bound				West Bound			
Movement:	L	- T	- R		L	- T	- R		L	- T	- R		L	- T	- R	
Control:	Stop Sign				Stop Sign				Stop Sign				Stop Sign			
Rights:	Include				Include				Include				Include			
Min. Green:	10	10	10	10	10	10	10	10	10	10	10	10	10	10	10	10
Lanes:	0 1	0 0	0	0	0 0	0 1	0	0	0 0	1! 0	0	0	0 0	0 0	0	0
Volume Module:																
Base Vol:	205	374	0	0	278	79	328	0	302	0	0	0				
Growth Adj:	1.00	1.00	1.00	1.00	1.00	1.00	1.00	1.00	1.00	1.00	1.00	1.00				
Initial Bse:	205	374	0	0	278	79	328	0	302	0	0	0				
User Adj:	1.00	1.00	1.00	1.00	1.00	1.00	1.00	1.00	1.00	1.00	1.00	1.00				
PHF Adj:	0.91	0.91	0.91	0.90	0.90	0.90	0.89	0.89	0.89	1.00	1.00	1.00				
PHF Volume:	227	413	0	0	308	88	367	0	338	0	0	0				
Reduct Vol:	0	0	0	0	0	0	0	0	0	0	0	0				
Reduced Vol:	227	413	0	0	308	88	367	0	338	0	0	0				
PCE Adj:	1.00	1.00	1.00	1.00	1.00	1.00	1.00	1.00	1.00	1.00	1.00	1.00				
MLF Adj:	1.00	1.00	1.00	1.00	1.00	1.00	1.00	1.00	1.00	1.00	1.00	1.00				
FinalVolume:	227	413	0	0	308	88	367	0	338	0	0	0				
Saturation Flow Module:																
Adjustment:	1.00	1.00	1.00	1.00	1.00	1.00	1.00	1.00	1.00	1.00	1.00	1.00				
Lanes:	0.35	0.65	0.00	0.00	0.78	0.22	0.52	0.00	0.48	0.00	0.00	0.00				
Final Sat.:	192	351	0	0	417	119	298	0	274	0	0	0				
Capacity Analysis Module:																
Vol/Sat:	1.18	1.18	xxxx	xxxx	0.74	0.74	1.23	xxxx	1.23	xxxx	xxxx	xxxx				
Crit Moves:	****				****		****									
Delay/Veh:	121.5	122	0.0	0.0	26.3	26.3	140.8	0.0	140.8	0.0	0.0	0.0				
Delay Adj:	1.00	1.00	1.00	1.00	1.00	1.00	1.00	1.00	1.00	1.00	1.00	1.00				
AdjDel/Veh:	121.5	122	0.0	0.0	26.3	26.3	140.8	0.0	140.8	0.0	0.0	0.0				
LOS by Move:	F	F	*	*	D	D	F	*	F	*	*	*				
ApproachDel:	121.5				26.3		140.8			xxxxxx						
Delay Adj:	1.00				1.00		1.00			xxxxx						
ApprAdjDel:	121.5				26.3		140.8			xxxxxx						
LOS by Appr:	F				D		F			*						
AllWayAvgQ:	16.9	16.9	16.9	2.5	2.5	2.5	20.9	20.9	20.9	0.0	0.0	0.0				

Note: Queue reported is the number of cars per lane.

Church of the Woods
Year 2013 Without Project Traffic Conditions
Saturday Peak Hour

Level Of Service Computation Report
2000 HCM 4-Way Stop Method (Base Volume Alternative)

Intersection #5 North Bay Road/State Route 189

Cycle (sec):	100	Critical Vol./Cap.(X):	0.741
Loss Time (sec):	0 (Y+R=4.0 sec)	Average Delay (sec/veh):	22.3
Optimal Cycle:	0	Level Of Service:	C

Approach:	North Bound			South Bound			East Bound			West Bound		
Movement:	L -	T -	R	L -	T -	R	L -	T -	R	L -	T -	R
Control:	Stop Sign			Stop Sign			Stop Sign			Stop Sign		
Rights:	Include			Include			Include			Include		
Min. Green:	10	10	10	10	10	10	10	10	10	10	10	10
Lanes:	0 0	0 0	0	1 0	0 0	1	1 0	1 0	0	0 0	0 1	0
Volume Module:												
Base Vol:	0	0	0	154	0	305	324	339	0	0	231	115
Growth Adj:	1.00	1.00	1.00	1.00	1.00	1.00	1.00	1.00	1.00	1.00	1.00	1.00
Initial Bse:	0	0	0	154	0	305	324	339	0	0	231	115
User Adj:	1.00	1.00	1.00	1.00	1.00	1.00	1.00	1.00	1.00	1.00	1.00	1.00
PHF Adj:	1.00	1.00	1.00	0.95	0.95	0.95	0.86	0.86	0.86	0.87	0.87	0.87
PHF Volume:	0	0	0	163	0	322	375	393	0	0	266	132
Reduct Vol:	0	0	0	0	0	0	0	0	0	0	0	0
Reduced Vol:	0	0	0	163	0	322	375	393	0	0	266	132
PCE Adj:	1.00	1.00	1.00	1.00	1.00	1.00	1.00	1.00	1.00	1.00	1.00	1.00
MLF Adj:	1.00	1.00	1.00	1.00	1.00	1.00	1.00	1.00	1.00	1.00	1.00	1.00
FinalVolume:	0	0	0	163	0	322	375	393	0	0	266	132
Saturation Flow Module:												
Adjustment:	1.00	1.00	1.00	1.00	1.00	1.00	1.00	1.00	1.00	1.00	1.00	1.00
Lanes:	0.00	0.00	0.00	1.00	0.00	1.00	1.00	1.00	0.00	0.00	0.67	0.33
Final Sat.:	0	0	0	463	0	547	507	545	0	0	373	186
Capacity Analysis Module:												
Vol/Sat:	xxxx	xxxx	xxxx	0.35	xxxx	0.59	0.74	0.72	xxxx	xxxx	0.71	0.71
Crit Moves:						****	****					****
Delay/Veh:	0.0	0.0	0.0	14.3	0.0	17.6	27.0	24.1	0.0	0.0	23.1	23.1
Delay Adj:	1.00	1.00	1.00	1.00	1.00	1.00	1.00	1.00	1.00	1.00	1.00	1.00
AdjDel/Veh:	0.0	0.0	0.0	14.3	0.0	17.6	27.0	24.1	0.0	0.0	23.1	23.1
LOS by Move:	*	*	*	B	*	C	D	C	*	*	C	C
ApproachDel:	xxxxxx			16.5			25.5			23.1		
Delay Adj:	xxxxx			1.00			1.00			1.00		
ApprAdjDel:	xxxxxx			16.5			25.5			23.1		
LOS by Appr:	*			C			D			C		
AllWayAvgQ:	0.0	0.0	0.0	0.5	0.0	1.3	2.4	2.2	0.0	2.1	2.1	2.1

Note: Queue reported is the number of cars per lane.

Church of the Woods
Year 2013 Without Project Traffic Conditions
Saturday Peak Hour

Level Of Service Computation Report
2000 HCM Unsignalized Method (Base Volume Alternative)

Intersection #6 Lake Gregory Road/State Route 189

Average Delay (sec/veh): 5.3 Worst Case Level Of Service: C[21.5]

Approach:	North Bound					South Bound					East Bound					West Bound				
Movement:	L	-	T	-	R	L	-	T	-	R	L	-	T	-	R	L	-	T	-	R
Control:	Uncontrolled					Uncontrolled					Stop Sign					Stop Sign				
Rights:	Include					Include					Include					Include				
Lanes:	0	0	0	1	0	0	1	0	0	0	0	0	0	0	0	0	0	1!	0	0
Volume Module:																				
Base Vol:	0	210		71		107	288		0		0		0		0	76		0		88
Growth Adj:	1.00	1.00		1.00		1.00	1.00		1.00		1.00		1.00		1.00	1.00		1.00		1.00
Initial Bse:	0	210		71		107	288		0		0		0		0	76		0		88
User Adj:	1.00	1.00		1.00		1.00	1.00		1.00		1.00		1.00		1.00	1.00		1.00		1.00
PHF Adj:	0.86	0.86		0.86		0.78	0.78		0.78		1.00		1.00		1.00	0.82		0.82		0.82
PHF Volume:	0	245		83		137	368		0		0		0		0	93		0		107
Reduct Vol:	0	0		0		0	0		0		0		0		0	0		0		0
FinalVolume:	0	245		83		137	368		0		0		0		0	93		0		107
Critical Gap Module:																				
Critical Gp:	xxxxx	xxxx		xxxxx		4.1	xxxx		xxxxx		xxxxx		xxxx		xxxxx	6.4		6.5		6.2
FollowUpTim:	xxxxx	xxxx		xxxxx		2.2	xxxx		xxxxx		xxxxx		xxxx		xxxxx	3.5		4.0		3.3
Capacity Module:																				
Cnflict Vol:	xxxx	xxxx		xxxxx		328	xxxx		xxxxx		xxxx		xxxx		xxxxx	928		928		286
Potent Cap.:	xxxx	xxxx		xxxxx		1243	xxxx		xxxxx		xxxx		xxxx		xxxxx	300		270		757
Move Cap.:	xxxx	xxxx		xxxxx		1243	xxxx		xxxxx		xxxx		xxxx		xxxxx	272		238		757
Volume/Cap:	xxxx	xxxx		xxxx		0.11	xxxx		xxxx		xxxx		xxxx		xxxx	0.34		0.00		0.14
Level Of Service Module:																				
2Way95thQ:	xxxx	xxxx		xxxxx		0.4	xxxx		xxxxx		xxxx		xxxx		xxxxx	xxxx		xxxx		xxxxx
Control Del:	xxxxx	xxxx		xxxxx		8.3	xxxx		xxxxx		xxxxx		xxxx		xxxxx	xxxxx		xxxx		xxxxx
LOS by Move:	*	*		*		A	*		*		*		*		*	*		*		*
Movement:	LT	-	LTR	-	RT	LT	-	LTR	-	RT	LT	-	LTR	-	RT	LT	-	LTR	-	RT
Shared Cap.:	xxxx	xxxx		xxxxx		xxxx	xxxx		xxxxx		xxxx		xxxx		xxxxx	xxxx		415		xxxxx
SharedQueue:	xxxxx	xxxx		xxxxx		0.4	xxxx		xxxxx		xxxxx		xxxx		xxxxx	xxxxx		2.6		xxxxx
Shrd ConDel:	xxxxx	xxxx		xxxxx		8.3	xxxx		xxxxx		xxxxx		xxxx		xxxxx	xxxxx		21.5		xxxxx
Shared LOS:	*	*		*		A	*		*		*		*		*	*		C		*
ApproachDel:	xxxxxx					xxxxxx					xxxxxx					21.5				
ApproachLOS:	*					*					*					C				

Note: Queue reported is the number of cars per lane.

Church of the Woods
Year 2013 Without Project Traffic Conditions
Saturday Peak Hour

Level Of Service Computation Report
2000 HCM Unsignalized Method (Base Volume Alternative)

Intersection #7 Lake Gregory Drive/State Route 18

Average Delay (sec/veh): 11.2 Worst Case Level Of Service: F[50.4]

Approach:	North Bound			South Bound			East Bound			West Bound		
Movement:	L	T	R	L	T	R	L	T	R	L	T	R
Control:	Stop Sign			Stop Sign			Uncontrolled			Uncontrolled		
Rights:	Include			Include			Include			Include		
Lanes:	0 0 0 0 0			1 0 0 0 1			1 0 1 0 0			0 0 1 0 1		
Volume Module:												
Base Vol:	0	0	0	268	0	96	121	467	0	0	475	160
Growth Adj:	1.00	1.00	1.00	1.00	1.00	1.00	1.00	1.00	1.00	1.00	1.00	1.00
Initial Bse:	0	0	0	268	0	96	121	467	0	0	475	160
User Adj:	1.00	1.00	1.00	1.00	1.00	1.00	1.00	1.00	1.00	1.00	1.00	1.00
PHF Adj:	1.00	1.00	1.00	0.97	0.97	0.97	0.85	0.85	0.85	0.85	0.85	0.85
PHF Volume:	0	0	0	275	0	99	143	551	0	0	556	187
Reduct Vol:	0	0	0	0	0	0	0	0	0	0	0	0
FinalVolume:	0	0	0	275	0	99	143	551	0	0	556	187
Critical Gap Module:												
Critical Gp:	xxxxx	xxxx	xxxxx	6.4	xxxx	6.2	4.1	xxxx	xxxxx	xxxxx	xxxx	xxxxx
FollowUpTim:	xxxxx	xxxx	xxxxx	3.5	xxxx	3.3	2.2	xxxx	xxxxx	xxxxx	xxxx	xxxxx
Capacity Module:												
Cnflict Vol:	xxxx	xxxx	xxxxx	1392	xxxx	556	744	xxxx	xxxxx	xxxx	xxxx	xxxxx
Potent Cap.:	xxxx	xxxx	xxxxx	158	xxxx	534	873	xxxx	xxxxx	xxxx	xxxx	xxxxx
Move Cap.:	xxxx	xxxx	xxxxx	138	xxxx	534	873	xxxx	xxxxx	xxxx	xxxx	xxxxx
Total Cap:	175	219	xxxxx	310	278	xxxxx	xxxx	xxxx	xxxxx	xxxx	xxxx	xxxxx
Volume/Cap:	xxxx	xxxx	xxxx	0.89	xxxx	0.18	0.16	xxxx	xxxx	xxxx	xxxx	xxxx
Level Of Service Module:												
2Way95thQ:	xxxx	xxxx	xxxxx	8.2	xxxx	0.7	0.6	xxxx	xxxxx	xxxx	xxxx	xxxxx
Control Del:	xxxxx	xxxx	xxxxx	63.7	xxxx	13.3	9.9	xxxx	xxxxx	xxxxx	xxxx	xxxxx
LOS by Move:	*	*	*	F	*	B	A	*	*	*	*	*
Movement:	LT	LTR	RT	LT	LTR	RT	LT	LTR	RT	LT	LTR	RT
Shared Cap.:	xxxx	xxxx	xxxxx	xxxx	xxxx	xxxxx	xxxx	xxxx	xxxxx	xxxx	xxxx	xxxxx
SharedQueue:	xxxxx	xxxx	xxxxx	xxxxx	xxxx	xxxxx	xxxxx	xxxx	xxxxx	xxxxx	xxxx	xxxxx
Shrd ConDel:	xxxxx	xxxx	xxxxx	xxxxx	xxxx	xxxxx	xxxxx	xxxx	xxxxx	xxxxx	xxxx	xxxxx
Shared LOS:	*	*	*	*	*	*	*	*	*	*	*	*
ApproachDel:	xxxxxx			50.4			xxxxxx			xxxxxx		
ApproachLOS:	*			F			*			*		

Note: Queue reported is the number of cars per lane.

Church of the Woods
Year 2013 Without Project Traffic Conditions
Saturday Peak Hour

Level Of Service Computation Report
2000 HCM Unsignalized Method (Base Volume Alternative)

Intersection #8 Bear Springs Road/State Route 18

Average Delay (sec/veh): 2.3 Worst Case Level Of Service: D[34.4]

Approach:	North Bound			South Bound			East Bound			West Bound		
Movement:	L -	T -	R	L -	T -	R	L -	T -	R	L -	T -	R
Control:	Stop Sign			Stop Sign			Uncontrolled			Uncontrolled		
Rights:	Include			Include			Include			Include		
Lanes:	0 0	1! 0	0	0 0	1! 0	0	1 0	0 1	0	1 0	0 1	0
Volume Module:												
Base Vol:	1	0	5	47	0	35	53	794	1	11	731	29
Growth Adj:	1.00	1.00	1.00	1.00	1.00	1.00	1.00	1.00	1.00	1.00	1.00	1.00
Initial Bse:	1	0	5	47	0	35	53	794	1	11	731	29
User Adj:	1.00	1.00	1.00	1.00	1.00	1.00	1.00	1.00	1.00	1.00	1.00	1.00
PHF Adj:	0.50	0.50	0.50	0.84	0.84	0.84	0.92	0.92	0.92	0.94	0.94	0.94
PHF Volume:	2	0	10	56	0	42	58	865	1	12	782	31
Reduct Vol:	0	0	0	0	0	0	0	0	0	0	0	0
FinalVolume:	2	0	10	56	0	42	58	865	1	12	782	31
Critical Gap Module:												
Critical Gp:	7.1	6.5	6.2	7.1	6.5	6.2	4.1	xxxx	xxxxx	4.1	xxxx	xxxxx
FollowUpTim:	3.5	4.0	3.3	3.5	4.0	3.3	2.2	xxxx	xxxxx	2.2	xxxx	xxxxx
Capacity Module:												
Cnflict Vol:	1823	1817	865	1807	1802	797	813	xxxx	xxxxx	866	xxxx	xxxxx
Potent Cap.:	60	79	356	62	80	390	823	xxxx	xxxxx	786	xxxx	xxxxx
Move Cap.:	50	72	356	56	74	390	823	xxxx	xxxxx	786	xxxx	xxxxx
Total Cap:	146	176	xxxxx	164	185	xxxxx	xxxx	xxxx	xxxxx	xxxx	xxxx	xxxxx
Volume/Cap:	0.01	0.00	0.03	0.34	0.00	0.11	0.07	xxxx	xxxx	0.01	xxxx	xxxx
Level Of Service Module:												
2Way95thQ:	xxxx	xxxx	xxxxx	xxxx	xxxx	xxxxx	0.2	xxxx	xxxxx	0.0	xxxx	xxxxx
Control Del:	xxxxx	xxxx	xxxxx	xxxxx	xxxx	xxxxx	9.7	xxxx	xxxxx	9.6	xxxx	xxxxx
LOS by Move:	*	*	*	*	*	*	A	*	*	A	*	*
Movement:	LT -	LTR -	RT	LT -	LTR -	RT	LT -	LTR -	RT	LT -	LTR -	RT
Shared Cap.:	xxxx	287	xxxxx	xxxx	217	xxxxx	xxxx	xxxx	xxxxx	xxxx	xxxx	xxxxx
SharedQueue:	xxxxx	0.1	xxxxx	xxxxx	2.1	xxxxx	xxxxx	xxxx	xxxxx	xxxxx	xxxx	xxxxx
Shrd ConDel:	xxxxx	18.1	xxxxx	xxxxx	34.4	xxxxx	xxxxx	xxxx	xxxxx	xxxxx	xxxx	xxxxx
Shared LOS:	*	C	*	*	D	*	*	*	*	*	*	*
ApproachDel:	18.1			34.4			xxxxxx			xxxxxx		
ApproachLOS:	C			D			*			*		

Note: Queue reported is the number of cars per lane.

Church of the Woods
Year 2013 Without Project Traffic Conditions
Saturday Peak Hour

Level Of Service Computation Report
2000 HCM Unsignalized Method (Base Volume Alternative)

Intersection #10 Daley Canyon Road/State Route 18

Average Delay (sec/veh): 7.2 Worst Case Level Of Service: C[20.5]

Approach:	North Bound					South Bound					East Bound					West Bound				
Movement:	L	-	T	-	R	L	-	T	-	R	L	-	T	-	R	L	-	T	-	R
Control:	Stop Sign					Stop Sign					Uncontrolled					Uncontrolled				
Rights:	Include					Include					Include					Include				
Lanes:	0	0	0	0	0	0	0	0	0	1	1	0	1	0	0	0	0	1	0	0
Volume Module:																				
Base Vol:	0	0	0	0	0	0	0	0	0	405	377	501	0	0	0	0	0	355	0	0
Growth Adj:	1.00	1.00	1.00	1.00	1.00	1.00	1.00	1.00	1.00	1.00	1.00	1.00	1.00	1.00	1.00	1.00	1.00	1.00	1.00	1.00
Initial Bse:	0	0	0	0	0	0	0	0	0	405	377	501	0	0	0	0	0	355	0	0
User Adj:	1.00	1.00	1.00	1.00	1.00	1.00	1.00	1.00	1.00	1.00	1.00	1.00	1.00	1.00	1.00	1.00	1.00	1.00	1.00	1.00
PHF Adj:	1.00	1.00	1.00	1.00	1.00	1.00	1.00	1.00	1.00	0.93	0.94	0.91	1.00	1.00	1.00	1.00	1.00	0.90	1.00	1.00
PHF Volume:	0	0	0	0	0	0	0	0	0	438	401	551	0	0	0	0	0	393	0	0
Reduct Vol:	0	0	0	0	0	0	0	0	0	0	0	0	0	0	0	0	0	0	0	0
FinalVolume:	0	0	0	0	0	0	0	0	0	438	401	551	0	0	0	0	0	393	0	0
Critical Gap Module:																				
Critical Gp:	xxxxx	xxxx	xxxxx	xxxxx	xxxx					6.2	4.1	xxxx	xxxxx	xxxxx	xxxx	xxxxx				
FollowUpTim:	xxxxx	xxxx	xxxxx	xxxxx	xxxx					3.3	2.2	xxxx	xxxxx	xxxxx	xxxx	xxxxx				
Capacity Module:																				
Cnflict Vol:	xxxx	xxxx	xxxxx	xxxx	xxxx					393	393	xxxx	xxxxx	xxxx	xxxx	xxxxx				
Potent Cap.:	xxxx	xxxx	xxxxx	xxxx	xxxx					660	1176	xxxx	xxxxx	xxxx	xxxx	xxxxx				
Move Cap.:	xxxx	xxxx	xxxxx	xxxx	xxxx					660	1176	xxxx	xxxxx	xxxx	xxxx	xxxxx				
Volume/Cap:	xxxx	xxxx	xxxx	xxxx	xxxx					0.66	0.34	xxxx	xxxx	xxxx	xxxx	xxxx				
Level Of Service Module:																				
2Way95thQ:	xxxx	xxxx	xxxxx	xxxx	xxxx					5.0	1.5	xxxx	xxxxx	xxxx	xxxx	xxxxx				
Control Del:	xxxxx	xxxx	xxxxx	xxxxx	xxxx					20.5	9.6	xxxx	xxxxx	xxxxx	xxxx	xxxxx				
LOS by Move:	*	*	*	*	*					C	A	*	*	*	*	*				
Movement:	LT	-	LTR	-	RT	LT	-	LTR	-	RT	LT	-	LTR	-	RT	LT	-	LTR	-	RT
Shared Cap.:	xxxx	xxxx	xxxxx	xxxx	xxxx	xxxxx					xxxx	xxxx	xxxxx	xxxx	xxxx	xxxxx				
SharedQueue:	xxxxx	xxxx	xxxxx	xxxxx	xxxx	xxxxx					xxxxx	xxxx	xxxxx	xxxxx	xxxx	xxxxx				
Shrd ConDel:	xxxxx	xxxx	xxxxx	xxxxx	xxxx	xxxxx					xxxxx	xxxx	xxxxx	xxxxx	xxxx	xxxxx				
Shared LOS:	*	*	*	*	*	*					*	*	*	*	*	*				
ApproachDel:	xxxxxx					20.5					xxxxxx					xxxxxx				
ApproachLOS:	*					C					*					*				

Note: Queue reported is the number of cars per lane.

Church of the Woods
Year 2013 Without Project Traffic Conditions
Saturday Peak Hour

Level Of Service Computation Report
2000 HCM Unsignalized Method (Base Volume Alternative)

Intersection #11 Daley Canyon Road/Daley Canyon Access Road

Average Delay (sec/veh): 3.7 Worst Case Level Of Service: B[13.0]

Approach:	North Bound				South Bound				East Bound				West Bound			
Movement:	L	- T	- R		L	- T	- R		L	- T	- R		L	- T	- R	
Control:	Uncontrolled				Uncontrolled				Stop Sign				Stop Sign			
Rights:	Include				Include				Include				Include			
Lanes:	0 0 1	0	0		0 1	0	0	0	0 0	0	0	0	0 0	0	0	1
Volume Module:																
Base Vol:	0	377	0		186	405	0		0	0	0		0	0	180	
Growth Adj:	1.00	1.00	1.00		1.00	1.00	1.00		1.00	1.00	1.00		1.00	1.00	1.00	
Initial Bse:	0	377	0		186	405	0		0	0	0		0	0	180	
User Adj:	1.00	1.00	1.00		1.00	1.00	1.00		1.00	1.00	1.00		1.00	1.00	1.00	
PHF Adj:	1.00	0.94	1.00		0.79	0.93	1.00		1.00	1.00	1.00		1.00	1.00	0.88	
PHF Volume:	0	401	0		236	438	0		0	0	0		0	0	204	
Reduct Vol:	0	0	0		0	0	0		0	0	0		0	0	0	
FinalVolume:	0	401	0		236	438	0		0	0	0		0	0	204	
Critical Gap Module:																
Critical Gp:	xxxxx	xxxx	xxxxx		4.1	xxxx	xxxxx		xxxxx	xxxx	xxxxx		xxxxx	xxxx	6.2	
FollowUpTim:	xxxxx	xxxx	xxxxx		2.2	xxxx	xxxxx		xxxxx	xxxx	xxxxx		xxxxx	xxxx	3.3	
Capacity Module:																
Cnflict Vol:	xxxx	xxxx	xxxxx		401	xxxx	xxxxx		xxxx	xxxx	xxxxx		xxxx	xxxx	401	
Potent Cap.:	xxxx	xxxx	xxxxx		1169	xxxx	xxxxx		xxxx	xxxx	xxxxx		xxxx	xxxx	654	
Move Cap.:	xxxx	xxxx	xxxxx		1169	xxxx	xxxxx		xxxx	xxxx	xxxxx		xxxx	xxxx	654	
Volume/Cap:	xxxx	xxxx	xxxx		0.20	xxxx	xxxx		xxxx	xxxx	xxxx		xxxx	xxxx	0.31	
Level Of Service Module:																
2Way95thQ:	xxxx	xxxx	xxxxx		0.8	xxxx	xxxxx		xxxx	xxxx	xxxxx		xxxx	xxxx	1.3	
Control Del:	xxxxx	xxxx	xxxxx		8.9	xxxx	xxxxx		xxxxx	xxxx	xxxxx		xxxxx	xxxx	13.0	
LOS by Move:	*	*	*		A	*	*		*	*	*		*	*	B	
Movement:	LT -	LTR -	RT		LT -	LTR -	RT		LT -	LTR -	RT		LT -	LTR -	RT	
Shared Cap.:	xxxx	xxxx	xxxxx		xxxx	xxxx	xxxxx		xxxx	xxxx	xxxxx		xxxx	xxxx	xxxxx	
SharedQueue:	xxxxx	xxxx	xxxxx		0.8	xxxx	xxxxx		xxxxx	xxxx	xxxxx		xxxxx	xxxx	xxxxx	
Shrd ConDel:	xxxxx	xxxx	xxxxx		8.9	xxxx	xxxxx		xxxxx	xxxx	xxxxx		xxxxx	xxxx	xxxxx	
Shared LOS:	*	*	*		A	*	*		*	*	*		*	*	*	
ApproachDel:	xxxxxx				xxxxxx				xxxxxx				13.0			
ApproachLOS:	*				*				*				B			

Note: Queue reported is the number of cars per lane.

Church of the Woods
Year 2013 Without Project Traffic Conditions
Saturday Peak Hour

Level Of Service Computation Report
2000 HCM Unsignalized Method (Base Volume Alternative)

Intersection #12 Daley Canyon Access Road/State Route 18

Average Delay (sec/veh): 9.0 Worst Case Level Of Service: F[52.9]

Approach:	North Bound					South Bound					East Bound					West Bound				
Movement:	L	-	T	-	R	L	-	T	-	R	L	-	T	-	R	L	-	T	-	R
Control:	Stop Sign					Stop Sign					Uncontrolled					Uncontrolled				
Rights:	Include					Include					Include					Include				
Lanes:	0	0	0	0	0	1	0	0	0	0	0	0	1	0	0	0	0	1	0	1
Volume Module:																				
Base Vol:	0	0	0			186	0	0			0	501	0			0	355	180		
Growth Adj:	1.00	1.00	1.00			1.00	1.00	1.00			1.00	1.00	1.00			1.00	1.00	1.00		
Initial Bse:	0	0	0			186	0	0			0	501	0			0	355	180		
User Adj:	1.00	1.00	1.00			1.00	1.00	1.00			1.00	1.00	1.00			1.00	1.00	1.00		
PHF Adj:	1.00	1.00	1.00			0.79	1.00	1.00			1.00	0.91	1.00			1.00	0.90	0.88		
PHF Volume:	0	0	0			236	0	0			0	551	0			0	393	204		
Reduct Vol:	0	0	0			0	0	0			0	0	0			0	0	0		
FinalVolume:	0	0	0			236	0	0			0	551	0			0	393	204		
Critical Gap Module:																				
Critical Gp:	xxxxx	xxxx	xxxxx			6.4	xxxx	xxxxx			xxxxx	xxxx	xxxxx			xxxxx	xxxx	xxxxx		
FollowUpTim:	xxxxx	xxxx	xxxxx			3.5	xxxx	xxxxx			xxxxx	xxxx	xxxxx			xxxxx	xxxx	xxxxx		
Capacity Module:																				
Cnflict Vol:	xxxx	xxxx	xxxxx			944	xxxx	xxxxx			xxxx	xxxx	xxxxx			xxxx	xxxx	xxxxx		
Potent Cap.:	xxxx	xxxx	xxxxx			294	xxxx	xxxxx			xxxx	xxxx	xxxxx			xxxx	xxxx	xxxxx		
Move Cap.:	xxxx	xxxx	xxxxx			294	xxxx	xxxxx			xxxx	xxxx	xxxxx			xxxx	xxxx	xxxxx		
Volume/Cap:	xxxx	xxxx	xxxx			0.80	xxxx	xxxx			xxxx	xxxx	xxxx			xxxx	xxxx	xxxx		
Level Of Service Module:																				
2Way95thQ:	xxxx	xxxx	xxxxx			6.5	xxxx	xxxxx			xxxx	xxxx	xxxxx			xxxx	xxxx	xxxxx		
Control Del:	xxxxx	xxxx	xxxxx			52.9	xxxx	xxxxx			xxxxx	xxxx	xxxxx			xxxxx	xxxx	xxxxx		
LOS by Move:	*	*	*			F	*	*			*	*	*			*	*	*		
Movement:	LT	-	LTR	-	RT	LT	-	LTR	-	RT	LT	-	LTR	-	RT	LT	-	LTR	-	RT
Shared Cap.:	xxxx	xxxx	xxxxx			xxxx	xxxx	xxxxx			xxxx	xxxx	xxxxx			xxxx	xxxx	xxxxx		
SharedQueue:	xxxxx	xxxx	xxxxx			xxxxx	xxxx	xxxxx			xxxxx	xxxx	xxxxx			xxxxx	xxxx	xxxxx		
Shrd ConDel:	xxxxx	xxxx	xxxxx			xxxxx	xxxx	xxxxx			xxxxx	xxxx	xxxxx			xxxxx	xxxx	xxxxx		
Shared LOS:	*	*	*			*	*	*			*	*	*			*	*	*		
ApproachDel:	xxxxxx					52.9					xxxxxx					xxxxxx				
ApproachLOS:	*					F					*					*				

Note: Queue reported is the number of cars per lane.

Church of the Woods
Year 2013 Without Project Traffic Conditions
Saturday Peak Hour

Level Of Service Computation Report
2000 HCM Unsignalized Method (Base Volume Alternative)

Intersection #13 State Route 173/State Route 18

Average Delay (sec/veh): 47.6 Worst Case Level Of Service: F[201.2]

Approach:	North Bound			South Bound			East Bound			West Bound		
Movement:	L	T	R	L	T	R	L	T	R	L	T	R
Control:	Stop Sign			Stop Sign			Uncontrolled			Uncontrolled		
Rights:	Include			Include			Include			Include		
Lanes:	0 0 0 0 0			0 0 1! 0 0			1 0 1 0 0			0 0 1 0 1		
Volume Module:												
Base Vol:	0	0	0	98	0	165	285	323	0	0	275	104
Growth Adj:	1.00	1.00	1.00	1.00	1.00	1.00	1.00	1.00	1.00	1.00	1.00	1.00
Initial Bse:	0	0	0	98	0	165	285	323	0	0	275	104
User Adj:	1.00	1.00	1.00	1.00	1.00	1.00	1.00	1.00	1.00	1.00	1.00	1.00
PHF Adj:	1.00	1.00	1.00	0.79	0.79	0.79	0.82	0.82	0.82	0.94	0.94	0.94
PHF Volume:	0	0	0	125	0	210	350	396	0	0	293	111
Reduct Vol:	0	0	0	0	0	0	0	0	0	0	0	0
FinalVolume:	0	0	0	125	0	210	350	396	0	0	293	111
Critical Gap Module:												
Critical Gp:	xxxxx	xxxx	xxxxx	6.4	6.5	6.2	4.1	xxxx	xxxxx	xxxxx	xxxx	xxxxx
FollowUpTim:	xxxxx	xxxx	xxxxx	3.5	4.0	3.3	2.2	xxxx	xxxxx	xxxxx	xxxx	xxxxx
Capacity Module:												
Cnflict Vol:	xxxx	xxxx	xxxxx	1389	1389	293	404	xxxx	xxxxx	xxxx	xxxx	xxxxx
Potent Cap.:	xxxx	xxxx	xxxxx	159	144	751	1166	xxxx	xxxxx	xxxx	xxxx	xxxxx
Move Cap.:	xxxx	xxxx	xxxxx	122	101	751	1166	xxxx	xxxxx	xxxx	xxxx	xxxxx
Volume/Cap:	xxxx	xxxx	xxxx	1.02	0.00	0.28	0.30	xxxx	xxxx	xxxx	xxxx	xxxx
Level Of Service Module:												
2Way95thQ:	xxxx	xxxx	xxxxx	xxxx	xxxx	xxxxx	1.3	xxxx	xxxxx	xxxx	xxxx	xxxxx
Control Del:	xxxxx	xxxx	xxxxx	xxxxx	xxxx	xxxxx	9.4	xxxx	xxxxx	xxxxx	xxxx	xxxxx
LOS by Move:	*	*	*	*	*	*	A	*	*	*	*	*
Movement:	LT	LTR	RT	LT	LTR	RT	LT	LTR	RT	LT	LTR	RT
Shared Cap.:	xxxx	xxxx	xxxxx	xxxx	257	xxxxx	xxxx	xxxx	xxxxx	xxxx	xxxx	xxxxx
SharedQueue:	xxxxx	xxxx	xxxxx	xxxxx	17.1	xxxxx	xxxxx	xxxx	xxxxx	xxxxx	xxxx	xxxxx
Shrd ConDel:	xxxxx	xxxx	xxxxx	xxxxx	201	xxxxx	xxxxx	xxxx	xxxxx	xxxxx	xxxx	xxxxx
Shared LOS:	*	*	*	*	F	*	*	*	*	*	*	*
ApproachDel:	xxxxxx			201.2			xxxxxx			xxxxxx		
ApproachLOS:	*			F			*			*		

Note: Queue reported is the number of cars per lane.

Church of the Woods
Year 2013 Without Project Conditions
Sunday Peak Hour

Level Of Service Computation Report
2000 HCM Unsignalized Method (Base Volume Alternative)

Intersection #1 North Road/State Route 189

Average Delay (sec/veh): 4.8 Worst Case Level Of Service: B[13.4]

Approach:	North Bound			South Bound			East Bound			West Bound		
Movement:	L -	T -	R	L -	T -	R	L -	T -	R	L -	T -	R
Control:	Stop Sign			Stop Sign			Uncontrolled			Uncontrolled		
Rights:	Include			Include			Include			Include		
Lanes:	0 0 0 0 0			0 0 1! 0 0			0 1 0 0 0			0 0 0 1 0		
Volume Module:												
Base Vol:	0	0	0	100	0	58	41	87	0	0	161	86
Growth Adj:	1.00	1.00	1.00	1.00	1.00	1.00	1.00	1.00	1.00	1.00	1.00	1.00
Initial Bse:	0	0	0	100	0	58	41	87	0	0	161	86
User Adj:	1.00	1.00	1.00	1.00	1.00	1.00	1.00	1.00	1.00	1.00	1.00	1.00
PHF Adj:	1.00	1.00	1.00	0.77	0.77	0.77	0.86	0.86	0.86	0.85	0.85	0.85
PHF Volume:	0	0	0	130	0	75	48	101	0	0	189	101
Reduct Vol:	0	0	0	0	0	0	0	0	0	0	0	0
FinalVolume:	0	0	0	130	0	75	48	101	0	0	189	101
Critical Gap Module:												
Critical Gp:	xxxxx	xxxx	xxxxx	6.4	6.5	6.2	4.1	xxxx	xxxxx	xxxxx	xxxx	xxxxx
FollowUpTim:	xxxxx	xxxx	xxxxx	3.5	4.0	3.3	2.2	xxxx	xxxxx	xxxxx	xxxx	xxxxx
Capacity Module:												
Cnflict Vol:	xxxx	xxxx	xxxxx	435	435	239	290	xxxx	xxxxx	xxxx	xxxx	xxxxx
Potent Cap.:	xxxx	xxxx	xxxxx	582	517	805	1284	xxxx	xxxxx	xxxx	xxxx	xxxxx
Move Cap.:	xxxx	xxxx	xxxxx	565	497	805	1284	xxxx	xxxxx	xxxx	xxxx	xxxxx
Volume/Cap:	xxxx	xxxx	xxxx	0.23	0.00	0.09	0.04	xxxx	xxxx	xxxx	xxxx	xxxx
Level Of Service Module:												
2Way95thQ:	xxxx	xxxx	xxxxx	xxxx	xxxx	xxxxx	0.1	xxxx	xxxxx	xxxx	xxxx	xxxxx
Control Del:	xxxxx	xxxx	xxxxx	xxxxx	xxxx	xxxxx	7.9	xxxx	xxxxx	xxxxx	xxxx	xxxxx
LOS by Move:	*	*	*	*	*	*	A	*	*	*	*	*
Movement:	LT -	LTR -	RT	LT -	LTR -	RT	LT -	LTR -	RT	LT -	LTR -	RT
Shared Cap.:	xxxx	xxxx	xxxxx	xxxx	634	xxxxx	xxxx	xxxx	xxxxx	xxxx	xxxx	xxxxx
SharedQueue:	xxxxx	xxxx	xxxxx	xxxxx	1.4	xxxxx	0.1	xxxx	xxxxx	xxxxx	xxxx	xxxxx
Shrd ConDel:	xxxxx	xxxx	xxxxx	xxxxx	13.4	xxxxx	7.9	xxxx	xxxxx	xxxxx	xxxx	xxxxx
Shared LOS:	*	*	*	*	B	*	A	*	*	*	*	*
ApproachDel:	xxxxxx			13.4			xxxxxx			xxxxxx		
ApproachLOS:	*			B			*			*		

Note: Queue reported is the number of cars per lane.

Church of the Woods
Year 2013 Without Project Conditions
Sunday Peak Hour

Level Of Service Computation Report
2000 HCM Unsignalized Method (Base Volume Alternative)

Intersection #2 Bear Springs Road/State Route 189

Average Delay (sec/veh): 4.5 Worst Case Level Of Service: B[13.9]

Approach:	North Bound			South Bound			East Bound			West Bound		
Movement:	L - T - R			L - T - R			L - T - R			L - T - R		
Control:	Stop Sign			Stop Sign			Uncontrolled			Uncontrolled		
Rights:	Include			Include			Include			Include		
Lanes:	0 0 1! 0 0			0 0 1! 0 0			0 0 1! 0 0			0 0 1! 0 0		
Volume Module:												
Base Vol:	13	16	11	38	12	65	46	154	23	13	195	21
Growth Adj:	1.00	1.00	1.00	1.00	1.00	1.00	1.00	1.00	1.00	1.00	1.00	1.00
Initial Bse:	13	16	11	38	12	65	46	154	23	13	195	21
User Adj:	1.00	1.00	1.00	1.00	1.00	1.00	1.00	1.00	1.00	1.00	1.00	1.00
PHF Adj:	0.81	0.81	0.81	0.79	0.79	0.79	0.83	0.83	0.83	0.96	0.96	0.96
PHF Volume:	16	20	14	48	15	82	55	185	28	13	202	22
Reduct Vol:	0	0	0	0	0	0	0	0	0	0	0	0
FinalVolume:	16	20	14	48	15	82	55	185	28	13	202	22
Critical Gap Module:												
Critical Gp:	7.1	6.5	6.2	7.1	6.5	6.2	4.1	xxxx	xxxxx	4.1	xxxx	xxxxx
FollowUpTim:	3.5	4.0	3.3	3.5	4.0	3.3	2.2	xxxx	xxxxx	2.2	xxxx	xxxxx
Capacity Module:												
Cnflict Vol:	598	560	199	566	563	213	224	xxxx	xxxxx	212	xxxx	xxxxx
Potent Cap.:	417	440	847	438	438	832	1357	xxxx	xxxxx	1370	xxxx	xxxxx
Move Cap.:	351	417	847	399	415	832	1357	xxxx	xxxxx	1370	xxxx	xxxxx
Volume/Cap:	0.05	0.05	0.02	0.12	0.04	0.10	0.04	xxxx	xxxx	0.01	xxxx	xxxx
Level Of Service Module:												
2Way95thQ:	xxxx	xxxx	xxxxx	xxxx	xxxx	xxxxx	0.1	xxxx	xxxxx	0.0	xxxx	xxxxx
Control Del:	xxxxx	xxxx	xxxxx	xxxxx	xxxx	xxxxx	7.8	xxxx	xxxxx	7.7	xxxx	xxxxx
LOS by Move:	*	*	*	*	*	*	A	*	*	A	*	*
Movement:	LT - LTR - RT			LT - LTR - RT			LT - LTR - RT			LT - LTR - RT		
Shared Cap.:	xxxx	453	xxxxx	xxxx	569	xxxxx	xxxx	xxxx	xxxxx	xxxx	xxxx	xxxxx
SharedQueue:	xxxxx	0.4	xxxxx	xxxxx	1.0	xxxxx	xxxxx	xxxx	xxxxx	xxxxx	xxxx	xxxxx
Shrd ConDel:	xxxxx	13.9	xxxxx	xxxxx	13.5	xxxxx	xxxxx	xxxx	xxxxx	xxxxx	xxxx	xxxxx
Shared LOS:	*	B	*	*	B	*	*	*	*	*	*	*
ApproachDel:	13.9			13.5			xxxxxx			xxxxxx		
ApproachLOS:	B			B			*			*		

Note: Queue reported is the number of cars per lane.

Church of the Woods
Year 2013 Without Project Conditions
Sunday Peak Hour

Level Of Service Computation Report
2000 HCM Unsignalized Method (Base Volume Alternative)

Intersection #3 Grass Valley Road/State Route 189

Average Delay (sec/veh): 22.8 Worst Case Level Of Service: E[40.8]

Approach:	North Bound					South Bound					East Bound					West Bound				
Movement:	L	-	T	-	R	L	-	T	-	R	L	-	T	-	R	L	-	T	-	R
Control:	Stop Sign					Stop Sign					Uncontrolled					Uncontrolled				
Rights:	Include					Include					Include					Include				
Lanes:	0	0	0	0	0	0	0	1!	0	0	1	0	1	0	0	0	0	0	1	0
Volume Module:																				
Base Vol:	0	0	0			346	0		186		76		167	0		0		57		129
Growth Adj:	1.00	1.00	1.00			1.00	1.00		1.00		1.00		1.00	1.00		1.00		1.00		1.00
Initial Bse:	0	0	0			346	0		186		76		167	0		0		57		129
User Adj:	1.00	1.00	1.00			1.00	1.00		1.00		1.00		1.00	1.00		1.00		1.00		1.00
PHF Adj:	1.00	1.00	1.00			0.90	0.90		0.90		0.91		0.91	0.91		0.83		0.83		0.83
PHF Volume:	0	0	0			384	0		207		83		183	0		0		69		156
Reduct Vol:	0	0	0			0	0		0		0		0	0		0		0		0
FinalVolume:	0	0	0			384	0		207		83		183	0		0		69		156
Critical Gap Module:																				
Critical Gp:	xxxxx	xxxx	xxxxx			6.4	6.5		6.2		4.1	xxxx	xxxxx	xxxxx		xxxx		xxxxx		
FollowUpTim:	xxxxx	xxxx	xxxxx			3.5	4.0		3.3		2.2	xxxx	xxxxx	xxxxx		xxxx		xxxxx		
Capacity Module:																				
Cnflict Vol:	xxxx	xxxx	xxxxx			497	497		147		225	xxxx	xxxxx	xxxx		xxxx		xxxxx		
Potent Cap.:	xxxx	xxxx	xxxxx			536	477		905		1355	xxxx	xxxxx	xxxx		xxxx		xxxxx		
Move Cap.:	xxxx	xxxx	xxxxx			511	448		905		1355	xxxx	xxxxx	xxxx		xxxx		xxxxx		
Total Cap:	390	466	xxxxx			570	503		xxxxx		xxxx	xxxx	xxxxx	xxxx		xxxx		xxxxx		
Volume/Cap:	xxxx	xxxx	xxxx			0.67	0.00		0.23		0.06	xxxx	xxxx	xxxx		xxxx		xxxx		
Level Of Service Module:																				
2Way95thQ:	xxxx	xxxx	xxxxx			xxxx	xxxx		xxxxx		0.2	xxxx	xxxxx	xxxx		xxxx		xxxxx		
Control Del:	xxxxx	xxxx	xxxxx			xxxxx	xxxx		xxxxx		7.8	xxxx	xxxxx	xxxxx		xxxx		xxxxx		
LOS by Move:	*	*	*			*	*		*		A	*	*	*		*		*		
Movement:	LT	-	LTR	-	RT	LT	-	LTR	-	RT	LT	-	LTR	-	RT	LT	-	LTR	-	RT
Shared Cap.:	xxxx	xxxx	xxxxx			xxxx	655		xxxxx		xxxx	xxxx	xxxxx	xxxx		xxxx		xxxxx		
SharedQueue:	xxxxx	xxxx	xxxxx			xxxxx	11.4		xxxxx		xxxxx	xxxx	xxxxx	xxxxx		xxxx		xxxxx		
Shrd ConDel:	xxxxx	xxxx	xxxxx			xxxxx	40.8		xxxxx		xxxxx	xxxx	xxxxx	xxxxx		xxxx		xxxxx		
Shared LOS:	*	*	*			*	E		*		*	*	*	*		*		*		
ApproachDel:	xxxxxx						40.8				xxxxxx					xxxxxx				
ApproachLOS:		*					E					*					*			

Note: Queue reported is the number of cars per lane.

Church of the Woods
Year 2013 Without Project Conditions
Sunday Peak Hour

Level Of Service Computation Report
2000 HCM 4-Way Stop Method (Base Volume Alternative)

Intersection #4 Daley Canyon Road/State Route 189

Cycle (sec):	100	Critical Vol./Cap.(X):	0.818
Loss Time (sec):	0 (Y+R=4.0 sec)	Average Delay (sec/veh):	22.3
Optimal Cycle:	0	Level Of Service:	C

Approach:	North Bound				South Bound				East Bound				West Bound			
Movement:	L	- T	- R		L	- T	- R		L	- T	- R		L	- T	- R	
Control:	Stop Sign				Stop Sign				Stop Sign				Stop Sign			
Rights:	Include				Include				Include				Include			
Min. Green:	10	10	10	10	10	10	10	10	10	10	10	10	10	10	10	10
Lanes:	0	1	0	0	0	0	0	0	1	0	0	0	1!	0	0	0
Volume Module:																
Base Vol:	129	178	0	0	303	42	196	0	298	0	0	0				
Growth Adj:	1.00	1.00	1.00	1.00	1.00	1.00	1.00	1.00	1.00	1.00	1.00	1.00				
Initial Bse:	129	178	0	0	303	42	196	0	298	0	0	0				
User Adj:	1.00	1.00	1.00	1.00	1.00	1.00	1.00	1.00	1.00	1.00	1.00	1.00				
PHF Adj:	0.86	0.86	0.86	0.87	0.87	0.87	0.96	0.96	0.96	1.00	1.00	1.00				
PHF Volume:	150	207	0	0	350	48	204	0	310	0	0	0				
Reduct Vol:	0	0	0	0	0	0	0	0	0	0	0	0				
Reduced Vol:	150	207	0	0	350	48	204	0	310	0	0	0				
PCE Adj:	1.00	1.00	1.00	1.00	1.00	1.00	1.00	1.00	1.00	1.00	1.00	1.00				
MLF Adj:	1.00	1.00	1.00	1.00	1.00	1.00	1.00	1.00	1.00	1.00	1.00	1.00				
FinalVolume:	150	207	0	0	350	48	204	0	310	0	0	0				
Saturation Flow Module:																
Adjustment:	1.00	1.00	1.00	1.00	1.00	1.00	1.00	1.00	1.00	1.00	1.00	1.00				
Lanes:	0.42	0.58	0.00	0.00	0.88	0.12	0.40	0.00	0.60	0.00	0.00	0.00				
Final Sat.:	237	327	0	0	515	71	249	0	379	0	0	0				
Capacity Analysis Module:																
Vol/Sat:	0.63	0.63	xxxx	xxxx	0.68	0.68	0.82	xxxx	0.82	xxxx	xxxx	xxxx				
Crit Moves:	****				****				****							
Delay/Veh:	18.3	18.3	0.0	0.0	19.6	19.6	27.2	0.0	27.2	0.0	0.0	0.0				
Delay Adj:	1.00	1.00	1.00	1.00	1.00	1.00	1.00	1.00	1.00	1.00	1.00	1.00				
AdjDel/Veh:	18.3	18.3	0.0	0.0	19.6	19.6	27.2	0.0	27.2	0.0	0.0	0.0				
LOS by Move:	C	C	*	*	C	C	D	*	D	*	*	*				
ApproachDel:	18.3				19.6		27.2		xxxxxx							
Delay Adj:	1.00				1.00		1.00		xxxxx							
ApprAdjDel:	18.3				19.6		27.2		xxxxxx							
LOS by Appr:	C				C		D		*							
AllWayAvgQ:	1.4	1.4	1.4	1.7	1.7	1.7	3.2	3.2	3.2	0.0	0.0	0.0				

Note: Queue reported is the number of cars per lane.

Church of the Woods
Year 2013 Without Project Conditions
Sunday Peak Hour

Level Of Service Computation Report
2000 HCM 4-Way Stop Method (Base Volume Alternative)

Intersection #5 North Bay Road/State Route 189

Cycle (sec): 100 Critical Vol./Cap.(X): 0.578
Loss Time (sec): 0 (Y+R=4.0 sec) Average Delay (sec/veh): 14.8
Optimal Cycle: 0 Level Of Service: B

Approach:	North Bound						South Bound						East Bound						West Bound					
Movement:	L	-	T	-	R		L	-	T	-	R		L	-	T	-	R		L	-	T	-	R	
Control:	Stop Sign						Stop Sign						Stop Sign						Stop Sign					
Rights:	Include						Include						Include						Include					
Min. Green:	10	10		10			10	10		10			10	10		10			10	10		10		
Lanes:	0	0	0	0	0		1	0	0	0	1		1	0	1	0	0		0	0	0	1	0	
Volume Module:																								
Base Vol:	0	0		0			82	0		268			191	208		0			0	202		90		
Growth Adj:	1.00	1.00		1.00			1.00	1.00		1.00			1.00	1.00		1.00			1.00	1.00		1.00		
Initial Bse:	0	0		0			82	0		268			191	208		0			0	202		90		
User Adj:	1.00	1.00		1.00			1.00	1.00		1.00			1.00	1.00		1.00			1.00	1.00		1.00		
PHF Adj:	1.00	1.00		1.00			0.78	0.78		0.78			0.81	0.81		0.81			0.90	0.90		0.90		
PHF Volume:	0	0		0			106	0		345			237	258		0			0	225		100		
Reduct Vol:	0	0		0			0	0		0			0	0		0			0	0		0		
Reduced Vol:	0	0		0			106	0		345			237	258		0			0	225		100		
PCE Adj:	1.00	1.00		1.00			1.00	1.00		1.00			1.00	1.00		1.00			1.00	1.00		1.00		
MLF Adj:	1.00	1.00		1.00			1.00	1.00		1.00			1.00	1.00		1.00			1.00	1.00		1.00		
FinalVolume:	0	0		0			106	0		345			237	258		0			0	225		100		
Saturation Flow Module:																								
Adjustment:	1.00	1.00		1.00			1.00	1.00		1.00			1.00	1.00		1.00			1.00	1.00		1.00		
Lanes:	0.00	0.00		0.00			1.00	0.00		1.00			1.00	1.00		0.00			0.00	0.69		0.31		
Final Sat.:	0	0		0			498	0		598			523	564		0			0	405		181		
Capacity Analysis Module:																								
Vol/Sat:	xxxx	xxxx		xxxx			0.21	xxxx		0.58			0.45	0.46		xxxx			xxxx	0.56		0.56		
Crit Moves:										****				****								****		
Delay/Veh:	0.0	0.0		0.0			11.5	0.0		15.7			14.7	13.9		0.0			0.0	15.9		15.9		
Delay Adj:	1.00	1.00		1.00			1.00	1.00		1.00			1.00	1.00		1.00			1.00	1.00		1.00		
AdjDel/Veh:	0.0	0.0		0.0			11.5	0.0		15.7			14.7	13.9		0.0			0.0	15.9		15.9		
LOS by Move:	*	*		*			B	*		C			B	B		*			*	C		C		
ApproachDel:	xxxxxx						14.7						14.2						15.9					
Delay Adj:	xxxxx						1.00						1.00						1.00					
ApprAdjDel:	xxxxxx						14.7						14.2						15.9					
LOS by Appr:	*						B						B						C					
AllWayAvgQ:	0.0	0.0		0.0			0.3	0.0		1.2			0.8	0.8		0.0			1.1	1.1		1.1		

Note: Queue reported is the number of cars per lane.

Church of the Woods
Year 2013 Without Project Conditions
Sunday Peak Hour

Level Of Service Computation Report
2000 HCM Unsignalized Method (Base Volume Alternative)

Intersection #6 Lake Gregory Road/State Route 189

Average Delay (sec/veh): 10.7 Worst Case Level Of Service: C[24.3]

Approach:	North Bound					South Bound					East Bound					West Bound				
Movement:	L	-	T	-	R	L	-	T	-	R	L	-	T	-	R	L	-	T	-	R
Control:	Uncontrolled					Uncontrolled					Stop Sign					Stop Sign				
Rights:	Include					Include					Include					Include				
Lanes:	0	0	0	1	0	0	1	0	0	0	0	0	0	0	0	0	0	1!	0	0
Volume Module:																				
Base Vol:	0	125		42		69	148		0		0		0		0	162		0		79
Growth Adj:	1.00	1.00		1.00		1.00	1.00		1.00		1.00		1.00		1.00	1.00		1.00		1.00
Initial Bse:	0	125		42		69	148		0		0		0		0	162		0		79
User Adj:	1.00	1.00		1.00		1.00	1.00		1.00		1.00		1.00		1.00	1.00		1.00		1.00
PHF Adj:	0.81	0.81		0.81		0.69	0.69		0.69		1.00		1.00		1.00	0.69		0.69		0.69
PHF Volume:	0	155		52		100	214		0		0		0		0	235		0		115
Reduct Vol:	0	0		0		0	0		0		0		0		0	0		0		0
FinalVolume:	0	155		52		100	214		0		0		0		0	235		0		115
Critical Gap Module:																				
Critical Gp:	xxxxx	xxxx		xxxxx		4.1	xxxx		xxxxx		xxxxx		xxxx		xxxxx	6.4		6.5		6.2
FollowUpTim:	xxxxx	xxxx		xxxxx		2.2	xxxx		xxxxx		xxxxx		xxxx		xxxxx	3.5		4.0		3.3
Capacity Module:																				
Cnflict Vol:	xxxx	xxxx		xxxxx		206	xxxx		xxxxx		xxxx		xxxx		xxxxx	595		595		180
Potent Cap.:	xxxx	xxxx		xxxxx		1377	xxxx		xxxxx		xxxx		xxxx		xxxxx	470		420		867
Move Cap.:	xxxx	xxxx		xxxxx		1377	xxxx		xxxxx		xxxx		xxxx		xxxxx	443		388		867
Volume/Cap:	xxxx	xxxx		xxxx		0.07	xxxx		xxxx		xxxx		xxxx		xxxx	0.53		0.00		0.13
Level Of Service Module:																				
2Way95thQ:	xxxx	xxxx		xxxxx		0.2	xxxx		xxxxx		xxxx		xxxx		xxxxx	xxxx		xxxx		xxxxx
Control Del:	xxxxx	xxxx		xxxxx		7.8	xxxx		xxxxx		xxxxx		xxxx		xxxxx	xxxxx		xxxx		xxxxx
LOS by Move:	*	*		*		A	*		*		*		*		*	*		*		*
Movement:	LT	-	LTR	-	RT	LT	-	LTR	-	RT	LT	-	LTR	-	RT	LT	-	LTR	-	RT
Shared Cap.:	xxxx	xxxx		xxxxx		xxxx	xxxx		xxxxx		xxxx		xxxx		xxxxx	xxxx		527		xxxxx
SharedQueue:	xxxxx	xxxx		xxxxx		0.2	xxxx		xxxxx		xxxxx		xxxx		xxxxx	xxxxx		4.9		xxxxx
Shrd ConDel:	xxxxx	xxxx		xxxxx		7.8	xxxx		xxxxx		xxxxx		xxxx		xxxxx	xxxxx		24.3		xxxxx
Shared LOS:	*	*		*		A	*		*		*		*		*	*		C		*
ApproachDel:	xxxxxx					xxxxxx					xxxxxx					24.3				
ApproachLOS:	*					*					*					C				

Note: Queue reported is the number of cars per lane.

Church of the Woods
Year 2013 Without Project Conditions
Sunday Peak Hour

Level Of Service Computation Report
2000 HCM Unsignalized Method (Base Volume Alternative)

Intersection #7 Lake Gregory Drive/State Route 18

Average Delay (sec/veh): 4.5 Worst Case Level Of Service: C[17.3]

Approach:	North Bound			South Bound			East Bound			West Bound		
Movement:	L	T	R	L	T	R	L	T	R	L	T	R
Control:	Stop Sign			Stop Sign			Uncontrolled			Uncontrolled		
Rights:	Include			Include			Include			Include		
Lanes:	0 0 0 0 0			1 0 0 0 1			1 0 1 0 0			0 0 1 0 1		
Volume Module:												
Base Vol:	0	0	0	147	0	163	58	274	0	0	520	109
Growth Adj:	1.00	1.00	1.00	1.00	1.00	1.00	1.00	1.00	1.00	1.00	1.00	1.00
Initial Bse:	0	0	0	147	0	163	58	274	0	0	520	109
User Adj:	1.00	1.00	1.00	1.00	1.00	1.00	1.00	1.00	1.00	1.00	1.00	1.00
PHF Adj:	1.00	1.00	1.00	0.89	0.89	0.89	0.92	0.92	0.92	0.84	0.84	0.84
PHF Volume:	0	0	0	165	0	183	63	297	0	0	621	130
Reduct Vol:	0	0	0	0	0	0	0	0	0	0	0	0
FinalVolume:	0	0	0	165	0	183	63	297	0	0	621	130
Critical Gap Module:												
Critical Gp:	xxxxx	xxxx	xxxxx	6.4	xxxx	6.2	4.1	xxxx	xxxxx	xxxxx	xxxx	xxxxx
FollowUpTim:	xxxxx	xxxx	xxxxx	3.5	xxxx	3.3	2.2	xxxx	xxxxx	xxxxx	xxxx	xxxxx
Capacity Module:												
Cnflict Vol:	xxxx	xxxx	xxxxx	1044	xxxx	621	751	xxxx	xxxxx	xxxx	xxxx	xxxxx
Potent Cap.:	xxxx	xxxx	xxxxx	256	xxxx	491	867	xxxx	xxxxx	xxxx	xxxx	xxxxx
Move Cap.:	xxxx	xxxx	xxxxx	242	xxxx	491	867	xxxx	xxxxx	xxxx	xxxx	xxxxx
Total Cap:	172	317	xxxxx	439	391	xxxxx	xxxx	xxxx	xxxxx	xxxx	xxxx	xxxxx
Volume/Cap:	xxxx	xxxx	xxxx	0.38	xxxx	0.37	0.07	xxxx	xxxx	xxxx	xxxx	xxxx
Level Of Service Module:												
2Way95thQ:	xxxx	xxxx	xxxxx	1.7	xxxx	1.7	0.2	xxxx	xxxxx	xxxx	xxxx	xxxxx
Control Del:	xxxxx	xxxx	xxxxx	18.1	xxxx	16.6	9.5	xxxx	xxxxx	xxxxx	xxxx	xxxxx
LOS by Move:	*	*	*	C	*	C	A	*	*	*	*	*
Movement:	LT	LTR	RT	LT	LTR	RT	LT	LTR	RT	LT	LTR	RT
Shared Cap.:	xxxx	xxxx	xxxxx	xxxx	xxxx	xxxxx	xxxx	xxxx	xxxxx	xxxx	xxxx	xxxxx
SharedQueue:	xxxxx	xxxx	xxxxx	xxxxx	xxxx	xxxxx	xxxxx	xxxx	xxxxx	xxxxx	xxxx	xxxxx
Shrd ConDel:	xxxxx	xxxx	xxxxx	xxxxx	xxxx	xxxxx	xxxxx	xxxx	xxxxx	xxxxx	xxxx	xxxxx
Shared LOS:	*	*	*	*	*	*	*	*	*	*	*	*
ApproachDel:	xxxxxx			17.3			xxxxxx			xxxxxx		
ApproachLOS:	*			C			*			*		

Note: Queue reported is the number of cars per lane.

Church of the Woods
Year 2013 Without Project Conditions
Sunday Peak Hour

Level Of Service Computation Report
2000 HCM Unsignalized Method (Base Volume Alternative)

Intersection #8 Bear Springs Road/State Route 18

Average Delay (sec/veh): 2.6 Worst Case Level Of Service: C[21.8]

Approach:	North Bound						South Bound						East Bound						West Bound					
Movement:	L	-	T	-	R		L	-	T	-	R		L	-	T	-	R		L	-	T	-	R	
Control:	Stop Sign						Stop Sign						Uncontrolled						Uncontrolled					
Rights:	Include						Include						Include						Include					
Lanes:	0	0	1!	0	0		0	0	1!	0	0		1	0	0	1	0		1	0	0	1	0	
Volume Module:																								
Base Vol:	17		0		17		15		4		22		19		531		15		12		577		16	
Growth Adj:	1.00	1.00		1.00		1.00	1.00	1.00		1.00		1.00	1.00	1.00		1.00		1.00	1.00	1.00		1.00		1.00
Initial Bse:	17		0		17		15		4		22		19		531		15		12		577		16	
User Adj:	1.00	1.00		1.00		1.00	1.00	1.00		1.00		1.00	1.00	1.00		1.00		1.00	1.00	1.00		1.00		1.00
PHF Adj:	0.50	0.50		0.50		0.40	0.40		0.40		0.40		0.89	0.89		0.89		0.83	0.83		0.83			0.83
PHF Volume:	34		0		34		38		10		55		21		597		17		14		694		19	
Reduct Vol:	0		0		0		0		0		0		0		0		0		0		0		0	
FinalVolume:	34		0		34		38		10		55		21		597		17		14		694		19	
Critical Gap Module:																								
Critical Gp:	7.1	6.5		6.2		7.1	6.5		6.2		4.1	xxxx	xxxxx		4.1	xxxx	xxxxx							
FollowUpTim:	3.5	4.0		3.3		3.5	4.0		3.3		2.2	xxxx	xxxxx		2.2	xxxx	xxxxx							
Capacity Module:																								
Cnflict Vol:	1413	1390		605		1398	1389		704		714	xxxx	xxxxx		613	xxxx	xxxxx							
Potent Cap.:	117	144		501		119	144		440		896	xxxx	xxxxx		976	xxxx	xxxxx							
Move Cap.:	93	138		501		108	138		440		896	xxxx	xxxxx		976	xxxx	xxxxx							
Total Cap:	210	257	xxxxx			233	260	xxxxx			xxxx	xxxx	xxxxx		xxxx	xxxx	xxxxx							
Volume/Cap:	0.16	0.00		0.07		0.16	0.04		0.13		0.02	xxxx		xxxx	0.01	xxxx		xxxx						
Level Of Service Module:																								
2Way95thQ:	xxxx	xxxx	xxxxx			xxxx	xxxx	xxxxx			0.1	xxxx	xxxxx		0.0	xxxx	xxxxx							
Control Del:	xxxxx	xxxx	xxxxx			xxxxx	xxxx	xxxxx			9.1	xxxx	xxxxx		8.7	xxxx	xxxxx							
LOS by Move:	*	*		*		*	*		*		A	*		*	A	*		*						
Movement:	LT	-	LTR	-	RT		LT	-	LTR	-	RT		LT	-	LTR	-	RT		LT	-	LTR	-	RT	
Shared Cap.:	xxxx		296	xxxxx			xxxx		316	xxxxx			xxxx	xxxx	xxxxx				xxxx	xxxx	xxxxx			
SharedQueue:	xxxxx		0.9	xxxxx		xxxxx		1.4	xxxxx			xxxxx	xxxx	xxxxx					xxxxx	xxxx	xxxxx			
Shrd ConDel:	xxxxx		20.8	xxxxx		xxxxx		21.8	xxxxx			xxxxx	xxxx	xxxxx					xxxxx	xxxx	xxxxx			
Shared LOS:	*		C		*		*		C		*		*		*		*		*		*		*	
ApproachDel:			20.8						21.8				xxxxxx						xxxxxx					
ApproachLOS:			C						C						*						*			

Note: Queue reported is the number of cars per lane.

Church of the Woods
Year 2013 Without Project Conditions
Sunday Peak Hour

Level Of Service Computation Report
2000 HCM Unsignalized Method (Base Volume Alternative)

Intersection #10 Daley Canyon Road/State Route 18

Average Delay (sec/veh): 10.6 Worst Case Level Of Service: D[25.1]

Approach:	North Bound					South Bound					East Bound					West Bound				
Movement:	L	-	T	-	R	L	-	T	-	R	L	-	T	-	R	L	-	T	-	R
Control:	Stop Sign					Stop Sign					Uncontrolled					Uncontrolled				
Rights:	Include					Include					Include					Include				
Lanes:	0	0	0	0	0	0	0	0	0	1	1	0	1	0	0	0	0	1	0	0
Volume Module:																				
Base Vol:	0	0	0	0	0	0	0	0	0	403	222	282	0	0	0	0	0	314	0	0
Growth Adj:	1.00	1.00	1.00	1.00	1.00	1.00	1.00	1.00	1.00	1.00	1.00	1.00	1.00	1.00	1.00	1.00	1.00	1.00	1.00	1.00
Initial Bse:	0	0	0	0	0	0	0	0	0	403	222	282	0	0	0	0	0	314	0	0
User Adj:	1.00	1.00	1.00	1.00	1.00	1.00	1.00	1.00	1.00	1.00	1.00	1.00	1.00	1.00	1.00	1.00	1.00	1.00	1.00	1.00
PHF Adj:	1.00	1.00	1.00	1.00	1.00	1.00	1.00	1.00	1.00	0.76	0.86	0.85	1.00	1.00	1.00	1.00	1.00	0.89	1.00	1.00
PHF Volume:	0	0	0	0	0	0	0	0	0	532	259	331	0	0	0	0	0	354	0	0
Reduct Vol:	0	0	0	0	0	0	0	0	0	0	0	0	0	0	0	0	0	0	0	0
FinalVolume:	0	0	0	0	0	0	0	0	0	532	259	331	0	0	0	0	0	354	0	0
Critical Gap Module:																				
Critical Gp:	xxxxx	xxxx	xxxxx	xxxxx	xxxx					6.2	4.1	xxxx	xxxxx	xxxxx	xxxx	xxxxx				
FollowUpTim:	xxxxx	xxxx	xxxxx	xxxxx	xxxx					3.3	2.2	xxxx	xxxxx	xxxxx	xxxx	xxxxx				
Capacity Module:																				
Cnflict Vol:	xxxx	xxxx	xxxxx	xxxx	xxxx					354	354	xxxx	xxxxx	xxxx	xxxx	xxxxx				
Potent Cap.:	xxxx	xxxx	xxxxx	xxxx	xxxx					694	1216	xxxx	xxxxx	xxxx	xxxx	xxxxx				
Move Cap.:	xxxx	xxxx	xxxxx	xxxx	xxxx					694	1216	xxxx	xxxxx	xxxx	xxxx	xxxxx				
Volume/Cap:	xxxx	xxxx	xxxx	xxxx	xxxx					0.77	0.21	xxxx	xxxx	xxxx	xxxx	xxxx				
Level Of Service Module:																				
2Way95thQ:	xxxx	xxxx	xxxxx	xxxx	xxxx					7.3	0.8	xxxx	xxxxx	xxxx	xxxx	xxxxx				
Control Del:	xxxxx	xxxx	xxxxx	xxxxx	xxxx					25.1	8.8	xxxx	xxxxx	xxxxx	xxxx	xxxxx				
LOS by Move:	*	*	*	*	*					D	A	*	*	*	*	*				
Movement:	LT	-	LTR	-	RT	LT	-	LTR	-	RT	LT	-	LTR	-	RT	LT	-	LTR	-	RT
Shared Cap.:	xxxx	xxxx	xxxxx	xxxx	xxxx	xxxxx					xxxx	xxxx	xxxxx	xxxx	xxxx	xxxxx				
SharedQueue:	xxxxx	xxxx	xxxxx	xxxxx	xxxx	xxxxx					xxxxx	xxxx	xxxxx	xxxxx	xxxx	xxxxx				
Shrd ConDel:	xxxxx	xxxx	xxxxx	xxxxx	xxxx	xxxxx					xxxxx	xxxx	xxxxx	xxxxx	xxxx	xxxxx				
Shared LOS:	*	*	*	*	*	*					*	*	*	*	*	*				
ApproachDel:	xxxxxx					25.1					xxxxxx					xxxxxx				
ApproachLOS:	*					D					*					*				

Note: Queue reported is the number of cars per lane.

Church of the Woods
Year 2013 Without Project Conditions
Sunday Peak Hour

Level Of Service Computation Report
2000 HCM Unsignalized Method (Base Volume Alternative)

Intersection #11 Daley Canyon Road/Daley Canyon Access Road

Average Delay (sec/veh): 4.8 Worst Case Level Of Service: B[12.7]

Approach:	North Bound					South Bound					East Bound					West Bound				
Movement:	L	-	T	-	R	L	-	T	-	R	L	-	T	-	R	L	-	T	-	R
Control:	Uncontrolled					Uncontrolled					Stop Sign					Stop Sign				
Rights:	Include					Include					Include					Include				
Lanes:	0	0	1	0	0	0	1	0	0	0	0	0	0	0	0	0	0	0	0	1
Volume Module:																				
Base Vol:	0	222		0		204	403		0		0		0		0	0		0		163
Growth Adj:	1.00	1.00		1.00		1.00	1.00		1.00		1.00		1.00		1.00	1.00		1.00		1.00
Initial Bse:	0	222		0		204	403		0		0		0		0	0		0		163
User Adj:	1.00	1.00		1.00		1.00	1.00		1.00		1.00		1.00		1.00	1.00		1.00		1.00
PHF Adj:	1.00	0.86		1.00		0.60	0.76		1.00		1.00		1.00		1.00	1.00		1.00		0.52
PHF Volume:	0	259		0		338	532		0		0		0		0	0		0		317
Reduct Vol:	0	0		0		0	0		0		0		0		0	0		0		0
FinalVolume:	0	259		0		338	532		0		0		0		0	0		0		317
Critical Gap Module:																				
Critical Gp:	xxxxx	xxxx		xxxxx		4.1	xxxx		xxxxx		xxxxx		xxxx		xxxxx	xxxxx		xxxx		6.2
FollowUpTim:	xxxxx	xxxx		xxxxx		2.2	xxxx		xxxxx		xxxxx		xxxx		xxxxx	xxxxx		xxxx		3.3
Capacity Module:																				
Cnflict Vol:	xxxx	xxxx		xxxxx		259	xxxx		xxxxx		xxxx		xxxx		xxxxx	xxxx		xxxx		259
Potent Cap.:	xxxx	xxxx		xxxxx		1317	xxxx		xxxxx		xxxx		xxxx		xxxxx	xxxx		xxxx		784
Move Cap.:	xxxx	xxxx		xxxxx		1317	xxxx		xxxxx		xxxx		xxxx		xxxxx	xxxx		xxxx		784
Volume/Cap:	xxxx	xxxx		xxxx		0.26	xxxx		xxxx		xxxx		xxxx		xxxx	xxxx		xxxx		0.40
Level Of Service Module:																				
2Way95thQ:	xxxx	xxxx		xxxxx		1.0	xxxx		xxxxx		xxxx		xxxx		xxxxx	xxxx		xxxx		2.0
Control Del:	xxxxx	xxxx		xxxxx		8.7	xxxx		xxxxx		xxxxx		xxxx		xxxxx	xxxxx		xxxx		12.7
LOS by Move:	*	*		*		A	*		*		*		*		*	*		*		B
Movement:	LT	-	LTR	-	RT	LT	-	LTR	-	RT	LT	-	LTR	-	RT	LT	-	LTR	-	RT
Shared Cap.:	xxxx	xxxx		xxxxx		xxxx	xxxx		xxxxx		xxxx		xxxx		xxxxx	xxxx		xxxx		xxxxx
SharedQueue:	xxxxx	xxxx		xxxxx		1.0	xxxx		xxxxx		xxxxx		xxxx		xxxxx	xxxxx		xxxx		xxxxx
Shrd ConDel:	xxxxx	xxxx		xxxxx		8.7	xxxx		xxxxx		xxxxx		xxxx		xxxxx	xxxxx		xxxx		xxxxx
Shared LOS:	*	*		*		A	*		*		*		*		*	*		*		*
ApproachDel:	xxxxxx					xxxxxx					xxxxxx					12.7				
ApproachLOS:	*					*					*					B				

Note: Queue reported is the number of cars per lane.

Church of the Woods
Year 2013 Without Project Conditions
Sunday Peak Hour

Level Of Service Computation Report
2000 HCM Unsignalized Method (Base Volume Alternative)

Intersection #12 Daley Canyon Access Road/State Route 18

Average Delay (sec/veh): 10.5 Worst Case Level Of Service: E[41.7]

Approach:	North Bound					South Bound					East Bound					West Bound				
Movement:	L	-	T	-	R	L	-	T	-	R	L	-	T	-	R	L	-	T	-	R
Control:	Stop Sign					Stop Sign					Uncontrolled					Uncontrolled				
Rights:	Include					Include					Include					Include				
Lanes:	0	0	0	0	0	1	0	0	0	0	0	0	1	0	0	0	0	1	0	1
Volume Module:																				
Base Vol:	0	0	0			204	0	0			0	282	0			0	314	163		
Growth Adj:	1.00	1.00	1.00			1.00	1.00	1.00			1.00	1.00	1.00			1.00	1.00	1.00		
Initial Bse:	0	0	0			204	0	0			0	282	0			0	314	163		
User Adj:	1.00	1.00	1.00			1.00	1.00	1.00			1.00	1.00	1.00			1.00	1.00	1.00		
PHF Adj:	1.00	1.00	1.00			0.60	1.00	1.00			1.00	0.85	1.00			1.00	0.89	0.52		
PHF Volume:	0	0	0			338	0	0			0	331	0			0	354	317		
Reduct Vol:	0	0	0			0	0	0			0	0	0			0	0	0		
FinalVolume:	0	0	0			338	0	0			0	331	0			0	354	317		
Critical Gap Module:																				
Critical Gp:	xxxxx	xxxx	xxxxx			6.4	xxxx	xxxxx			xxxxx	xxxx	xxxxx			xxxxx	xxxx	xxxxx		
FollowUpTim:	xxxxx	xxxx	xxxxx			3.5	xxxx	xxxxx			xxxxx	xxxx	xxxxx			xxxxx	xxxx	xxxxx		
Capacity Module:																				
Cnflict Vol:	xxxx	xxxx	xxxxx			686	xxxx	xxxxx			xxxx	xxxx	xxxxx			xxxx	xxxx	xxxxx		
Potent Cap.:	xxxx	xxxx	xxxxx			416	xxxx	xxxxx			xxxx	xxxx	xxxxx			xxxx	xxxx	xxxxx		
Move Cap.:	xxxx	xxxx	xxxxx			416	xxxx	xxxxx			xxxx	xxxx	xxxxx			xxxx	xxxx	xxxxx		
Volume/Cap:	xxxx	xxxx	xxxx			0.81	xxxx	xxxx			xxxx	xxxx	xxxx			xxxx	xxxx	xxxx		
Level Of Service Module:																				
2Way95thQ:	xxxx	xxxx	xxxxx			7.4	xxxx	xxxxx			xxxx	xxxx	xxxxx			xxxx	xxxx	xxxxx		
Control Del:	xxxxx	xxxx	xxxxx			41.7	xxxx	xxxxx			xxxxx	xxxx	xxxxx			xxxxx	xxxx	xxxxx		
LOS by Move:	*	*	*			E	*	*			*	*	*			*	*	*		
Movement:	LT	-	LTR	-	RT	LT	-	LTR	-	RT	LT	-	LTR	-	RT	LT	-	LTR	-	RT
Shared Cap.:	xxxx	xxxx	xxxxx			xxxx	xxxx	xxxxx			xxxx	xxxx	xxxxx			xxxx	xxxx	xxxxx		
SharedQueue:	xxxxx	xxxx	xxxxx			xxxxx	xxxx	xxxxx			xxxxx	xxxx	xxxxx			xxxxx	xxxx	xxxxx		
Shrd ConDel:	xxxxx	xxxx	xxxxx			xxxxx	xxxx	xxxxx			xxxxx	xxxx	xxxxx			xxxxx	xxxx	xxxxx		
Shared LOS:	*	*	*			*	*	*			*	*	*			*	*	*		
ApproachDel:	xxxxxx					41.7					xxxxxx					xxxxxx				
ApproachLOS:	*					E					*					*				

Note: Queue reported is the number of cars per lane.

Church of the Woods
Year 2013 Without Project Conditions
Sunday Peak Hour

Level Of Service Computation Report
2000 HCM Unsignalized Method (Base Volume Alternative)

Intersection #13 State Route 173/State Route 18

Average Delay (sec/veh): 7.2 Worst Case Level Of Service: C[21.7]

Approach:	North Bound					South Bound					East Bound					West Bound				
Movement:	L	-	T	-	R	L	-	T	-	R	L	-	T	-	R	L	-	T	-	R
Control:	Stop Sign					Stop Sign					Uncontrolled					Uncontrolled				
Rights:	Include					Include					Include					Include				
Lanes:	0	0	0	0	0	0	0	1!	0	0	1	0	1	0	0	0	0	1	0	1
Volume Module:																				
Base Vol:	0	0	0	52	0	159	249	177	0	0	182	135								
Growth Adj:	1.00	1.00	1.00	1.00	1.00	1.00	1.00	1.00	1.00	1.00	1.00	1.00								
Initial Bse:	0	0	0	52	0	159	249	177	0	0	182	135								
User Adj:	1.00	1.00	1.00	1.00	1.00	1.00	1.00	1.00	1.00	1.00	1.00	1.00								
PHF Adj:	1.00	1.00	1.00	0.82	0.82	0.82	0.80	0.80	0.80	0.85	0.85	0.85								
PHF Volume:	0	0	0	63	0	193	312	222	0	0	215	159								
Reduct Vol:	0	0	0	0	0	0	0	0	0	0	0	0								
FinalVolume:	0	0	0	63	0	193	312	222	0	0	215	159								
Critical Gap Module:																				
Critical Gp:	xxxxx	xxxx	xxxxx	6.4	6.5	6.2	4.1	xxxx	xxxxx	xxxxx	xxxx	xxxxx								
FollowUpTim:	xxxxx	xxxx	xxxxx	3.5	4.0	3.3	2.2	xxxx	xxxxx	xxxxx	xxxx	xxxxx								
Capacity Module:																				
Cnflict Vol:	xxxx	xxxx	xxxxx	1060	1060	215	374	xxxx	xxxxx	xxxx	xxxx	xxxxx								
Potent Cap.:	xxxx	xxxx	xxxxx	250	226	830	1196	xxxx	xxxxx	xxxx	xxxx	xxxxx								
Move Cap.:	xxxx	xxxx	xxxxx	200	167	830	1196	xxxx	xxxxx	xxxx	xxxx	xxxxx								
Volume/Cap:	xxxx	xxxx	xxxx	0.32	0.00	0.23	0.26	xxxx	xxxx	xxxx	xxxx	xxxx								
Level Of Service Module:																				
2Way95thQ:	xxxx	xxxx	xxxxx	xxxx	xxxx	xxxxx	1.0	xxxx	xxxxx	xxxx	xxxx	xxxxx								
Control Del:	xxxxx	xxxx	xxxxx	xxxxx	xxxx	xxxxx	9.1	xxxx	xxxxx	xxxxx	xxxx	xxxxx								
LOS by Move:	*	*	*	*	*	*	A	*	*	*	*	*								
Movement:	LT	-	LTR	-	RT	LT	-	LTR	-	RT	LT	-	LTR	-	RT	LT	-	LTR	-	RT
Shared Cap.:	xxxx	xxxx	xxxxx	xxxx	467	xxxxx	xxxx	xxxx	xxxxx	xxxx	xxxx	xxxxx								
SharedQueue:	xxxxx	xxxx	xxxxx	xxxxx	3.2	xxxxx	xxxxx	xxxx	xxxxx	xxxxx	xxxx	xxxxx								
Shrd ConDel:	xxxxx	xxxx	xxxxx	xxxxx	21.7	xxxxx	xxxxx	xxxx	xxxxx	xxxxx	xxxx	xxxxx								
Shared LOS:	*	*	*	*	C	*	*	*	*	*	*	*								
ApproachDel:	xxxxxx				21.7		xxxxxx				xxxxxx									
ApproachLOS:	*				C		*				*									

Note: Queue reported is the number of cars per lane.

YEAR 2013 WITH PROJECT CONDITIONS

Church of the Woods
Year 2013 With Project Traffic Conditions
Saturday Peak Hour

Level Of Service Computation Report
2000 HCM Unsignalized Method (Base Volume Alternative)

Intersection #1 North Road/State Route 189

Average Delay (sec/veh): 9.7 Worst Case Level Of Service: D[26.0]

Approach:	North Bound			South Bound			East Bound			West Bound		
Movement:	L	T	R	L	T	R	L	T	R	L	T	R
Control:	Stop Sign			Stop Sign			Uncontrolled			Uncontrolled		
Rights:	Include			Include			Include			Include		
Lanes:	0 0 0 0 0			0 0 1! 0 0			0 1 0 0 0			0 0 0 1 0		
Volume Module:												
Base Vol:	0	0	0	188	0	57	42	176	0	0	169	157
Growth Adj:	1.00	1.00	1.00	1.00	1.00	1.00	1.00	1.00	1.00	1.00	1.00	1.00
Initial Bse:	0	0	0	188	0	57	42	176	0	0	169	157
User Adj:	1.00	1.00	1.00	1.00	1.00	1.00	1.00	1.00	1.00	1.00	1.00	1.00
PHF Adj:	1.00	1.00	1.00	0.71	0.71	0.71	0.82	0.82	0.82	0.90	0.90	0.90
PHF Volume:	0	0	0	264	0	80	51	214	0	0	187	174
Reduct Vol:	0	0	0	0	0	0	0	0	0	0	0	0
FinalVolume:	0	0	0	264	0	80	51	214	0	0	187	174
Critical Gap Module:												
Critical Gp:	xxxxx	xxxx	xxxxx	6.4	6.5	6.2	4.1	xxxx	xxxxx	xxxxx	xxxx	xxxxx
FollowUpTim:	xxxxx	xxxx	xxxxx	3.5	4.0	3.3	2.2	xxxx	xxxxx	xxxxx	xxxx	xxxxx
Capacity Module:												
Cnflict Vol:	xxxx	xxxx	xxxxx	590	590	274	361	xxxx	xxxxx	xxxx	xxxx	xxxxx
Potent Cap.:	xxxx	xxxx	xxxxx	474	423	769	1209	xxxx	xxxxx	xxxx	xxxx	xxxxx
Move Cap.:	xxxx	xxxx	xxxxx	458	405	769	1209	xxxx	xxxxx	xxxx	xxxx	xxxxx
Volume/Cap:	xxxx	xxxx	xxxx	0.58	0.00	0.10	0.04	xxxx	xxxx	xxxx	xxxx	xxxx
Level Of Service Module:												
2Way95thQ:	xxxx	xxxx	xxxxx	xxxx	xxxx	xxxxx	0.1	xxxx	xxxxx	xxxx	xxxx	xxxxx
Control Del:	xxxxx	xxxx	xxxxx	xxxxx	xxxx	xxxxx	8.1	xxxx	xxxxx	xxxxx	xxxx	xxxxx
LOS by Move:	*	*	*	*	*	*	A	*	*	*	*	*
Movement:	LT	LTR	RT	LT	LTR	RT	LT	LTR	RT	LT	LTR	RT
Shared Cap.:	xxxx	xxxx	xxxxx	xxxx	506	xxxxx	xxxx	xxxx	xxxxx	xxxx	xxxx	xxxxx
SharedQueue:	xxxxx	xxxx	xxxxx	xxxxx	5.1	xxxxx	0.1	xxxx	xxxxx	xxxxx	xxxx	xxxxx
Shrd ConDel:	xxxxx	xxxx	xxxxx	xxxxx	26.0	xxxxx	8.1	xxxx	xxxxx	xxxxx	xxxx	xxxxx
Shared LOS:	*	*	*	*	D	*	A	*	*	*	*	*
ApproachDel:	xxxxxx			26.0			xxxxxx			xxxxxx		
ApproachLOS:	*			D			*			*		

Note: Queue reported is the number of cars per lane.

Church of the Woods
Year 2013 With Project Traffic Conditions
Saturday Peak Hour

Level Of Service Computation Report
2000 HCM Unsignalized Method (Base Volume Alternative)

Intersection #2 Bear Springs Road/State Route 189

Average Delay (sec/veh): 5.5 Worst Case Level Of Service: C[20.2]

Approach:	North Bound				South Bound				East Bound				West Bound			
Movement:	L	- T	- R		L	- T	- R		L	- T	- R		L	- T	- R	
Control:	Stop Sign				Stop Sign				Uncontrolled				Uncontrolled			
Rights:	Include				Include				Include				Include			
Lanes:	0	0	1!	0 0	0	0	1!	0 0	0	0	1!	0 0	0	0	1!	0 0
Volume Module:																
Base Vol:	25	16	16		39	12	68		73	232	37		12	229	36	
Growth Adj:	1.00	1.00	1.00		1.00	1.00	1.00		1.00	1.00	1.00		1.00	1.00	1.00	
Initial Bse:	25	16	16		39	12	68		73	232	37		12	229	36	
User Adj:	1.00	1.00	1.00		1.00	1.00	1.00		1.00	1.00	1.00		1.00	1.00	1.00	
PHF Adj:	0.66	0.66	0.66		0.80	0.80	0.80		0.86	0.86	0.86		0.91	0.91	0.91	
PHF Volume:	38	24	24		49	15	85		84	269	43		13	252	40	
Reduct Vol:	0	0	0		0	0	0		0	0	0		0	0	0	
FinalVolume:	38	24	24		49	15	85		84	269	43		13	252	40	
Critical Gap Module:																
Critical Gp:	7.1	6.5	6.2		7.1	6.5	6.2		4.1	xxxx	xxxxx		4.1	xxxx	xxxxx	
FollowUpTim:	3.5	4.0	3.3		3.5	4.0	3.3		2.2	xxxx	xxxxx		2.2	xxxx	xxxxx	
Capacity Module:																
Cnflict Vol:	808	778	290		782	779	272		292	xxxx	xxxxx		311	xxxx	xxxxx	
Potent Cap.:	302	330	754		314	329	771		1281	xxxx	xxxxx		1261	xxxx	xxxxx	
Move Cap.:	243	304	754		269	303	771		1281	xxxx	xxxxx		1261	xxxx	xxxxx	
Volume/Cap:	0.16	0.08	0.03		0.18	0.05	0.11		0.07	xxxx	xxxx		0.01	xxxx	xxxx	
Level Of Service Module:																
2Way95thQ:	xxxx	xxxx	xxxxx		xxxx	xxxx	xxxxx		0.2	xxxx	xxxxx		0.0	xxxx	xxxxx	
Control Del:	xxxxx	xxxx	xxxxx		xxxxx	xxxx	xxxxx		8.0	xxxx	xxxxx		7.9	xxxx	xxxxx	
LOS by Move:	*	*	*		*	*	*		A	*	*		A	*	*	
Movement:	LT	- LTR	- RT		LT	- LTR	- RT		LT	- LTR	- RT		LT	- LTR	- RT	
Shared Cap.:	xxxx	323	xxxxx		xxxx	436	xxxxx		xxxx	xxxx	xxxxx		xxxx	xxxx	xxxxx	
SharedQueue:	xxxxx	1.1	xxxxx		xxxxx	1.5	xxxxx		xxxxx	xxxx	xxxxx		xxxxx	xxxx	xxxxx	
Shrd ConDel:	xxxxx	20.2	xxxxx		xxxxx	17.5	xxxxx		xxxxx	xxxx	xxxxx		xxxxx	xxxx	xxxxx	
Shared LOS:	*	C	*		*	C	*		*	*	*		*	*	*	
ApproachDel:	20.2				17.5				xxxxxx				xxxxxx			
ApproachLOS:	C				C				*				*			

Note: Queue reported is the number of cars per lane.

Church of the Woods
Year 2013 With Project Traffic Conditions
Saturday Peak Hour

Level Of Service Computation Report
2000 HCM Unsignalized Method (Base Volume Alternative)

Intersection #3 Grass Valley Road/State Route 189

Average Delay (sec/veh): 167.1 Worst Case Level Of Service: F[330.8]

Approach:	North Bound			South Bound			East Bound			West Bound		
Movement:	L	T	R	L	T	R	L	T	R	L	T	R
Control:	Stop Sign			Stop Sign			Uncontrolled			Uncontrolled		
Rights:	Include			Include			Include			Include		
Lanes:	0 0 0 0 0			0 0 1! 0 0			1 0 1 0 0			0 0 0 1 0		
Volume Module:												
Base Vol:	0	0	0	390	0	274	133	221	0	0	90	205
Growth Adj:	1.00	1.00	1.00	1.00	1.00	1.00	1.00	1.00	1.00	1.00	1.00	1.00
Initial Bse:	0	0	0	390	0	274	133	221	0	0	90	205
User Adj:	1.00	1.00	1.00	1.00	1.00	1.00	1.00	1.00	1.00	1.00	1.00	1.00
PHF Adj:	1.00	1.00	1.00	0.81	0.81	0.81	0.78	0.78	0.78	0.83	0.83	0.83
PHF Volume:	0	0	0	481	0	338	171	284	0	0	108	246
Reduct Vol:	0	0	0	0	0	0	0	0	0	0	0	0
FinalVolume:	0	0	0	481	0	338	171	284	0	0	108	246
Critical Gap Module:												
Critical Gp:	xxxxx	xxxx	xxxxx	6.4	6.5	6.2	4.1	xxxx	xxxxx	xxxxx	xxxx	xxxxx
FollowUpTim:	xxxxx	xxxx	xxxxx	3.5	4.0	3.3	2.2	xxxx	xxxxx	xxxxx	xxxx	xxxxx
Capacity Module:												
Cnflict Vol:	xxxx	xxxx	xxxxx	858	858	231	355	xxxx	xxxxx	xxxx	xxxx	xxxxx
Potent Cap.:	xxxx	xxxx	xxxxx	330	297	813	1215	xxxx	xxxxx	xxxx	xxxx	xxxxx
Move Cap.:	xxxx	xxxx	xxxxx	294	255	813	1215	xxxx	xxxxx	xxxx	xxxx	xxxxx
Total Cap:	162	297	xxxxx	384	340	xxxxx	xxxx	xxxx	xxxxx	xxxx	xxxx	xxxxx
Volume/Cap:	xxxx	xxxx	xxxx	1.25	0.00	0.42	0.14	xxxx	xxxx	xxxx	xxxx	xxxx
Level Of Service Module:												
2Way95thQ:	xxxx	xxxx	xxxxx	xxxx	xxxx	xxxxx	0.5	xxxx	xxxxx	xxxx	xxxx	xxxxx
Control Del:	xxxxx	xxxx	xxxxx	xxxxx	xxxx	xxxxx	8.4	xxxx	xxxxx	xxxxx	xxxx	xxxxx
LOS by Move:	*	*	*	*	*	*	A	*	*	*	*	*
Movement:	LT	LTR	RT	LT	LTR	RT	LT	LTR	RT	LT	LTR	RT
Shared Cap.:	xxxx	xxxx	xxxxx	xxxx	491	xxxxx	xxxx	xxxx	xxxxx	xxxx	xxxx	xxxxx
SharedQueue:	xxxxx	xxxx	xxxxx	xxxxx	47.5	xxxxx	xxxxx	xxxx	xxxxx	xxxxx	xxxx	xxxxx
Shrd ConDel:	xxxxx	xxxx	xxxxx	xxxxx	331	xxxxx	xxxxx	xxxx	xxxxx	xxxxx	xxxx	xxxxx
Shared LOS:	*	*	*	*	F	*	*	*	*	*	*	*
ApproachDel:	xxxxxx			330.8			xxxxxx			xxxxxx		
ApproachLOS:	*			F			*			*		

Note: Queue reported is the number of cars per lane.

Church of the Woods
Year 2013 With Project Traffic Conditions
Saturday Peak Hour

Level Of Service Computation Report
2000 HCM 4-Way Stop Method (Base Volume Alternative)

Intersection #4 Daley Canyon Road/State Route 189

Cycle (sec):	100	Critical Vol./Cap.(X):	1.244
Loss Time (sec):	0 (Y+R=4.0 sec)	Average Delay (sec/veh):	113.6
Optimal Cycle:	0	Level Of Service:	F

Approach:	North Bound				South Bound				East Bound				West Bound			
Movement:	L	T	R		L	T	R		L	T	R		L	T	R	
Control:	Stop Sign				Stop Sign				Stop Sign				Stop Sign			
Rights:	Include				Include				Include				Include			
Min. Green:	10	10	10	10	10	10	10	10	10	10	10	10	10	10	10	10
Lanes:	0 1	0 0	0	0	0 0	0 1	0	0	0 0	1! 0	0	0	0 0	0 0	0	0
Volume Module:																
Base Vol:	210	382	0	0	285	79	328	0	306	0	0	0				
Growth Adj:	1.00	1.00	1.00	1.00	1.00	1.00	1.00	1.00	1.00	1.00	1.00	1.00				
Initial Bse:	210	382	0	0	285	79	328	0	306	0	0	0				
User Adj:	1.00	1.00	1.00	1.00	1.00	1.00	1.00	1.00	1.00	1.00	1.00	1.00				
PHF Adj:	0.91	0.91	0.91	0.90	0.90	0.90	0.89	0.89	0.89	1.00	1.00	1.00				
PHF Volume:	232	422	0	0	316	88	367	0	342	0	0	0				
Reduct Vol:	0	0	0	0	0	0	0	0	0	0	0	0				
Reduced Vol:	232	422	0	0	316	88	367	0	342	0	0	0				
PCE Adj:	1.00	1.00	1.00	1.00	1.00	1.00	1.00	1.00	1.00	1.00	1.00	1.00				
MLF Adj:	1.00	1.00	1.00	1.00	1.00	1.00	1.00	1.00	1.00	1.00	1.00	1.00				
FinalVolume:	232	422	0	0	316	88	367	0	342	0	0	0				
Saturation Flow Module:																
Adjustment:	1.00	1.00	1.00	1.00	1.00	1.00	1.00	1.00	1.00	1.00	1.00	1.00				
Lanes:	0.35	0.65	0.00	0.00	0.78	0.22	0.51	0.01	0.48	0.00	0.00	0.00				
Final Sat.:	192	349	0	0	420	116	295	0	275	0	0	0				
Capacity Analysis Module:																
Vol/Sat:	1.21	1.21	xxxx	xxxx	0.75	0.75	1.24	0.00	1.24	xxxx	xxxx	xxxx				
Crit Moves:	****				****		****									
Delay/Veh:	132.7	133	0.0	0.0	27.4	27.4	145.0	145	145.0	0.0	0.0	0.0				
Delay Adj:	1.00	1.00	1.00	1.00	1.00	1.00	1.00	1.00	1.00	1.00	1.00	1.00				
AdjDel/Veh:	132.7	133	0.0	0.0	27.4	27.4	145.0	145	145.0	0.0	0.0	0.0				
LOS by Move:	F	F	*	*	D	D	F	F	F	*	*	*				
ApproachDel:	132.7				27.4		145.0			xxxxxx						
Delay Adj:	1.00				1.00		1.00			xxxxx						
ApprAdjDel:	132.7				27.4		145.0			xxxxxx						
LOS by Appr:	F				D		F			*						
AllWayAvgQ:	18.5	18.5	18.5	2.6	2.6	2.6	21.5	21.5	21.5	0.0	0.0	0.0				

Note: Queue reported is the number of cars per lane.

Church of the Woods
Year 2013 With Project Traffic Conditions
Saturday Peak Hour

Level Of Service Computation Report
2000 HCM 4-Way Stop Method (Base Volume Alternative)

Intersection #5 North Bay Road/State Route 189

Cycle (sec): 100 | Critical Vol./Cap.(X): 0.750
Loss Time (sec): 0 (Y+R=4.0 sec) | Average Delay (sec/veh): 22.9
Optimal Cycle: 0 | Level Of Service: C

Approach:	North Bound						South Bound						East Bound						West Bound					
Movement:	L	-	T	-	R		L	-	T	-	R		L	-	T	-	R		L	-	T	-	R	
Control:	Stop Sign						Stop Sign						Stop Sign						Stop Sign					
Rights:	Include						Include						Include						Include					
Min. Green:	10	10	10	10	10	10	10	10	10	10	10	10	10	10	10	10	10	10	10	10	10	10	10	10
Lanes:	0	0	0	0	0		1	0	0	0	1		1	0	1	0	0		0	0	0	1	0	
Volume Module:																								
Base Vol:	0	0	0	154	0	308	327	344	0	0	235	115												
Growth Adj:	1.00	1.00	1.00	1.00	1.00	1.00	1.00	1.00	1.00	1.00	1.00	1.00												
Initial Bse:	0	0	0	154	0	308	327	344	0	0	235	115												
User Adj:	1.00	1.00	1.00	1.00	1.00	1.00	1.00	1.00	1.00	1.00	1.00	1.00												
PHF Adj:	1.00	1.00	1.00	0.95	0.95	0.95	0.86	0.86	0.86	0.87	0.87	0.87												
PHF Volume:	0	0	0	163	0	326	379	399	0	0	270	132												
Reduct Vol:	0	0	0	0	0	0	0	0	0	0	0	0												
Reduced Vol:	0	0	0	163	0	326	379	399	0	0	270	132												
PCE Adj:	1.00	1.00	1.00	1.00	1.00	1.00	1.00	1.00	1.00	1.00	1.00	1.00												
MLF Adj:	1.00	1.00	1.00	1.00	1.00	1.00	1.00	1.00	1.00	1.00	1.00	1.00												
FinalVolume:	0	0	0	163	0	326	379	399	0	0	270	132												
Saturation Flow Module:																								
Adjustment:	1.00	1.00	1.00	1.00	1.00	1.00	1.00	1.00	1.00	1.00	1.00	1.00												
Lanes:	0.00	0.00	0.00	1.00	0.00	1.00	1.00	1.00	0.00	0.00	0.67	0.33												
Final Sat.:	0	0	0	462	0	545	505	543	0	0	375	183												
Capacity Analysis Module:																								
Vol/Sat:	xxxx	xxxx	xxxx	0.35	xxxx	0.60	0.75	0.73	xxxx	xxxx	0.72	0.72												
Crit Moves:						****	****				****													
Delay/Veh:	0.0	0.0	0.0	14.3	0.0	17.9	27.7	25.0	0.0	0.0	23.8	23.8												
Delay Adj:	1.00	1.00	1.00	1.00	1.00	1.00	1.00	1.00	1.00	1.00	1.00	1.00												
AdjDel/Veh:	0.0	0.0	0.0	14.3	0.0	17.9	27.7	25.0	0.0	0.0	23.8	23.8												
LOS by Move:	*	*	*	B	*	C	D	C	*	*	C	C												
ApproachDel:	xxxxxx				16.7			26.3			23.8													
Delay Adj:	xxxxx				1.00			1.00			1.00													
ApprAdjDel:	xxxxxx				16.7			26.3			23.8													
LOS by Appr:	*				C			D			C													
AllWayAvgQ:	0.0	0.0	0.0	0.5	0.0	1.3	2.5	2.4	0.0	2.2	2.2	2.2												

Note: Queue reported is the number of cars per lane.

Church of the Woods
Year 2013 With Project Traffic Conditions
Saturday Peak Hour

Level Of Service Computation Report
2000 HCM Unsignalized Method (Base Volume Alternative)

Intersection #6 Lake Gregory Road/State Route 189

Average Delay (sec/veh): 5.3 Worst Case Level Of Service: C[21.9]

Approach:	North Bound					South Bound					East Bound					West Bound				
Movement:	L	-	T	-	R	L	-	T	-	R	L	-	T	-	R	L	-	T	-	R
Control:	Uncontrolled					Uncontrolled					Stop Sign					Stop Sign				
Rights:	Include					Include					Include					Include				
Lanes:	0	0	0	1	0	0	1	0	0	0	0	0	0	0	0	0	0	1!	0	0
Volume Module:																				
Base Vol:	0	215		71		107	292		0		0		0		0	76		0		88
Growth Adj:	1.00	1.00		1.00		1.00	1.00		1.00		1.00		1.00		1.00	1.00		1.00		1.00
Initial Bse:	0	215		71		107	292		0		0		0		0	76		0		88
User Adj:	1.00	1.00		1.00		1.00	1.00		1.00		1.00		1.00		1.00	1.00		1.00		1.00
PHF Adj:	0.86	0.86		0.86		0.78	0.78		0.78		1.00		1.00		1.00	0.82		0.82		0.82
PHF Volume:	0	251		83		137	373		0		0		0		0	93		0		107
Reduct Vol:	0	0		0		0	0		0		0		0		0	0		0		0
FinalVolume:	0	251		83		137	373		0		0		0		0	93		0		107
Critical Gap Module:																				
Critical Gp:	xxxxx	xxxx		xxxxx		4.1	xxxx		xxxxx		xxxxx		xxxx		xxxxx	6.4		6.5		6.2
FollowUpTim:	xxxxx	xxxx		xxxxx		2.2	xxxx		xxxxx		xxxxx		xxxx		xxxxx	3.5		4.0		3.3
Capacity Module:																				
Cnflict Vol:	xxxx	xxxx		xxxxx		334	xxxx		xxxxx		xxxx		xxxx		xxxxx	939		939		292
Potent Cap.:	xxxx	xxxx		xxxxx		1237	xxxx		xxxxx		xxxx		xxxx		xxxxx	295		266		752
Move Cap.:	xxxx	xxxx		xxxxx		1237	xxxx		xxxxx		xxxx		xxxx		xxxxx	268		234		752
Volume/Cap:	xxxx	xxxx		xxxx		0.11	xxxx		xxxx		xxxx		xxxx		xxxx	0.35		0.00		0.14
Level Of Service Module:																				
2Way95thQ:	xxxx	xxxx		xxxxx		0.4	xxxx		xxxxx		xxxx		xxxx		xxxxx	xxxx		xxxx		xxxxx
Control Del:	xxxxx	xxxx		xxxxx		8.3	xxxx		xxxxx		xxxxx		xxxx		xxxxx	xxxxx		xxxx		xxxxx
LOS by Move:	*	*		*		A	*		*		*		*		*	*		*		*
Movement:	LT	-	LTR	-	RT	LT	-	LTR	-	RT	LT	-	LTR	-	RT	LT	-	LTR	-	RT
Shared Cap.:	xxxx	xxxx		xxxxx		xxxx	xxxx		xxxxx		xxxx		xxxx		xxxxx	xxxx		410		xxxxx
SharedQueue:	xxxxx	xxxx		xxxxx		0.4	xxxx		xxxxx		xxxxx		xxxx		xxxxx	xxxxx		2.6		xxxxx
Shrd ConDel:	xxxxx	xxxx		xxxxx		8.3	xxxx		xxxxx		xxxxx		xxxx		xxxxx	xxxxx		21.9		xxxxx
Shared LOS:	*	*		*		A	*		*		*		*		*	*		C		*
ApproachDel:	xxxxxx					xxxxxx					xxxxxx					21.9				
ApproachLOS:	*					*					*					C				

Note: Queue reported is the number of cars per lane.

Church of the Woods
Year 2013 With Project Traffic Conditions
Saturday Peak Hour

Level Of Service Computation Report
2000 HCM Unsignalized Method (Base Volume Alternative)

Intersection #7 Lake Gregory Drive/State Route 18

Average Delay (sec/veh): 11.8 Worst Case Level Of Service: F[53.3]

Approach:	North Bound			South Bound			East Bound			West Bound		
Movement:	L	T	R	L	T	R	L	T	R	L	T	R
Control:	Stop Sign			Stop Sign			Uncontrolled			Uncontrolled		
Rights:	Include			Include			Include			Include		
Lanes:	0 0 0 0 0			1 0 0 0 1			1 0 1 0 0			0 0 1 0 1		
Volume Module:												
Base Vol:	0	0	0	272	0	96	121	470	0	0	478	165
Growth Adj:	1.00	1.00	1.00	1.00	1.00	1.00	1.00	1.00	1.00	1.00	1.00	1.00
Initial Bse:	0	0	0	272	0	96	121	470	0	0	478	165
User Adj:	1.00	1.00	1.00	1.00	1.00	1.00	1.00	1.00	1.00	1.00	1.00	1.00
PHF Adj:	1.00	1.00	1.00	0.97	0.97	0.97	0.85	0.85	0.85	0.85	0.85	0.85
PHF Volume:	0	0	0	279	0	99	143	554	0	0	560	193
Reduct Vol:	0	0	0	0	0	0	0	0	0	0	0	0
FinalVolume:	0	0	0	279	0	99	143	554	0	0	560	193
Critical Gap Module:												
Critical Gp:	xxxxx	xxxx	xxxxx	6.4	xxxx	6.2	4.1	xxxx	xxxxx	xxxxx	xxxx	xxxxx
FollowUpTim:	xxxxx	xxxx	xxxxx	3.5	xxxx	3.3	2.2	xxxx	xxxxx	xxxxx	xxxx	xxxxx
Capacity Module:												
Cnflict Vol:	xxxx	xxxx	xxxxx	1399	xxxx	560	753	xxxx	xxxxx	xxxx	xxxx	xxxxx
Potent Cap.:	xxxx	xxxx	xxxxx	156	xxxx	532	866	xxxx	xxxxx	xxxx	xxxx	xxxxx
Move Cap.:	xxxx	xxxx	xxxxx	137	xxxx	532	866	xxxx	xxxxx	xxxx	xxxx	xxxxx
Total Cap:	173	216	xxxxx	309	276	xxxxx	xxxx	xxxx	xxxxx	xxxx	xxxx	xxxxx
Volume/Cap:	xxxx	xxxx	xxxx	0.90	xxxx	0.19	0.16	xxxx	xxxx	xxxx	xxxx	xxxx
Level Of Service Module:												
2Way95thQ:	xxxx	xxxx	xxxxx	8.6	xxxx	0.7	0.6	xxxx	xxxxx	xxxx	xxxx	xxxxx
Control Del:	xxxxx	xxxx	xxxxx	67.4	xxxx	13.3	10.0	xxxx	xxxxx	xxxxx	xxxx	xxxxx
LOS by Move:	*	*	*	F	*	B	A	*	*	*	*	*
Movement:	LT	LTR	RT	LT	LTR	RT	LT	LTR	RT	LT	LTR	RT
Shared Cap.:	xxxx	xxxx	xxxxx	xxxx	xxxx	xxxxx	xxxx	xxxx	xxxxx	xxxx	xxxx	xxxxx
SharedQueue:	xxxxx	xxxx	xxxxx	xxxxx	xxxx	xxxxx	xxxxx	xxxx	xxxxx	xxxxx	xxxx	xxxxx
Shrd ConDel:	xxxxx	xxxx	xxxxx	xxxxx	xxxx	xxxxx	xxxxx	xxxx	xxxxx	xxxxx	xxxx	xxxxx
Shared LOS:	*	*	*	*	*	*	*	*	*	*	*	*
ApproachDel:	xxxxxx			53.3			xxxxxx			xxxxxx		
ApproachLOS:	*			F			*			*		

Note: Queue reported is the number of cars per lane.

Church of the Woods
Year 2013 With Project Traffic Conditions
Saturday Peak Hour

Level Of Service Computation Report
2000 HCM Unsignalized Method (Base Volume Alternative)

Intersection #8 Bear Springs Road/State Route 18

Average Delay (sec/veh): 2.5 Worst Case Level Of Service: E[36.7]

Approach:	North Bound						South Bound						East Bound						West Bound					
Movement:	L	-	T	-	R		L	-	T	-	R		L	-	T	-	R		L	-	T	-	R	
Control:	Stop Sign						Stop Sign						Uncontrolled						Uncontrolled					
Rights:	Include						Include						Include						Include					
Lanes:	0	0	1!	0	0		0	0	1!	0	0		1	0	0	1	0		1	0	0	1	0	
Volume Module:																								
Base Vol:	1	0	5				50	0	35				53	801	1				11	739	32			
Growth Adj:	1.00	1.00	1.00				1.00	1.00	1.00				1.00	1.00	1.00				1.00	1.00	1.00			
Initial Bse:	1	0	5				50	0	35				53	801	1				11	739	32			
User Adj:	1.00	1.00	1.00				1.00	1.00	1.00				1.00	1.00	1.00				1.00	1.00	1.00			
PHF Adj:	0.50	0.50	0.50				0.84	0.84	0.84				0.92	0.92	0.92				0.94	0.94	0.94			
PHF Volume:	2	0	10				60	0	42				58	873	1				12	790	34			
Reduct Vol:	0	0	0				0	0	0				0	0	0				0	0	0			
FinalVolume:	2	0	10				60	0	42				58	873	1				12	790	34			
Critical Gap Module:																								
Critical Gp:	7.1	6.5	6.2				7.1	6.5	6.2				4.1	xxxx	xxxxx				4.1	xxxx	xxxxx			
FollowUpTim:	3.5	4.0	3.3				3.5	4.0	3.3				2.2	xxxx	xxxxx				2.2	xxxx	xxxxx			
Capacity Module:																								
Cnflict Vol:	1840	1837	873				1825	1820	807				825	xxxx	xxxxx				874	xxxx	xxxxx			
Potent Cap.:	59	77	352				60	78	384				814	xxxx	xxxxx				781	xxxx	xxxxx			
Move Cap.:	49	70	352				55	72	384				814	xxxx	xxxxx				781	xxxx	xxxxx			
Total Cap:	144	174	xxxxx				161	183	xxxxx				xxxx	xxxx	xxxxx				xxxx	xxxx	xxxxx			
Volume/Cap:	0.01	0.00	0.03				0.37	0.00	0.11				0.07	xxxx	xxxx				0.02	xxxx	xxxx			
Level Of Service Module:																								
2Way95thQ:	xxxx	xxxx	xxxxx				xxxx	xxxx	xxxxx				0.2	xxxx	xxxxx				0.0	xxxx	xxxxx			
Control Del:	xxxxx	xxxx	xxxxx				xxxxx	xxxx	xxxxx				9.8	xxxx	xxxxx				9.7	xxxx	xxxxx			
LOS by Move:	*	*	*				*	*	*				A	*	*				A	*	*			
Movement:	LT	-	LTR	-	RT		LT	-	LTR	-	RT		LT	-	LTR	-	RT		LT	-	LTR	-	RT	
Shared Cap.:	xxxx	284	xxxxx				xxxx	212	xxxxx				xxxx	xxxx	xxxxx				xxxx	xxxx	xxxxx			
SharedQueue:	xxxxx	0.1	xxxxx				xxxxx	2.4	xxxxx				xxxxx	xxxx	xxxxx				xxxxx	xxxx	xxxxx			
Shrd ConDel:	xxxxx	18.2	xxxxx				xxxxx	36.7	xxxxx				xxxxx	xxxx	xxxxx				xxxxx	xxxx	xxxxx			
Shared LOS:	*	C	*				*	E	*				*	*	*				*	*	*			
ApproachDel:	18.2						36.7						xxxxxx						xxxxxx					
ApproachLOS:	C						E						*						*					

Note: Queue reported is the number of cars per lane.

Church of the Woods
Year 2013 With Project Traffic Conditions
Saturday Peak Hour

Level Of Service Computation Report
2000 HCM Unsignalized Method (Base Volume Alternative)

Intersection #9 Project Access/State Route 18

Average Delay (sec/veh): 0.4 Worst Case Level Of Service: C[17.8]

Approach:	North Bound			South Bound			East Bound			West Bound		
Movement:	L	T	R	L	T	R	L	T	R	L	T	R
Control:	Stop Sign			Stop Sign			Uncontrolled			Uncontrolled		
Rights:	Include			Include			Include			Include		
Lanes:	0 0 0 0 0			1 0 0 0 1			1 0 1 0 0			0 0 1 0 1		
Volume Module:												
Base Vol:	0	0	0	20	0	11	10	878	0	0	760	18
Growth Adj:	1.00	1.00	1.00	1.00	1.00	1.00	1.00	1.00	1.00	1.00	1.00	1.00
Initial Bse:	0	0	0	20	0	11	10	878	0	0	760	18
User Adj:	1.00	1.00	1.00	1.00	1.00	1.00	1.00	1.00	1.00	1.00	1.00	1.00
PHF Adj:	1.00	1.00	1.00	0.95	0.95	0.95	0.95	0.91	1.00	1.00	0.90	0.95
PHF Volume:	0	0	0	21	0	12	11	965	0	0	842	19
Reduct Vol:	0	0	0	0	0	0	0	0	0	0	0	0
FinalVolume:	0	0	0	21	0	12	11	965	0	0	842	19
Critical Gap Module:												
Critical Gp:	xxxxx	xxxx	xxxxx	6.4	xxxx	6.2	4.1	xxxx	xxxxx	xxxxx	xxxx	xxxxx
FollowUpTim:	xxxxx	xxxx	xxxxx	3.5	xxxx	3.3	2.2	xxxx	xxxxx	xxxxx	xxxx	xxxxx
Capacity Module:												
Cnflict Vol:	xxxx	xxxx	xxxxx	1828	xxxx	842	861	xxxx	xxxxx	xxxx	xxxx	xxxxx
Potent Cap.:	xxxx	xxxx	xxxxx	85	xxxx	367	790	xxxx	xxxxx	xxxx	xxxx	xxxxx
Move Cap.:	xxxx	xxxx	xxxxx	85	xxxx	367	790	xxxx	xxxxx	xxxx	xxxx	xxxxx
Total Cap:	216	240	xxxxx	272	245	xxxxx	xxxx	xxxx	xxxxx	xxxx	xxxx	xxxxx
Volume/Cap:	xxxx	xxxx	xxxx	0.08	xxxx	0.03	0.01	xxxx	xxxx	xxxx	xxxx	xxxx
Level Of Service Module:												
2Way95thQ:	xxxx	xxxx	xxxxx	0.2	xxxx	0.1	0.0	xxxx	xxxxx	xxxx	xxxx	xxxxx
Control Del:	xxxxx	xxxx	xxxxx	19.3	xxxx	15.1	9.6	xxxx	xxxxx	xxxxx	xxxx	xxxxx
LOS by Move:	*	*	*	C	*	C	A	*	*	*	*	*
Movement:	LT	LTR	RT	LT	LTR	RT	LT	LTR	RT	LT	LTR	RT
Shared Cap.:	xxxx	xxxx	xxxxx	xxxx	xxxx	xxxxx	xxxx	xxxx	xxxxx	xxxx	xxxx	xxxxx
SharedQueue:	xxxxx	xxxx	xxxxx	xxxxx	xxxx	xxxxx	xxxxx	xxxx	xxxxx	xxxxx	xxxx	xxxxx
Shrd ConDel:	xxxxx	xxxx	xxxxx	xxxxx	xxxx	xxxxx	xxxxx	xxxx	xxxxx	xxxxx	xxxx	xxxxx
Shared LOS:	*	*	*	*	*	*	*	*	*	*	*	*
ApproachDel:	xxxxxx			17.8			xxxxxx			xxxxxx		
ApproachLOS:	*			C			*			*		

Note: Queue reported is the number of cars per lane.

Church of the Woods
Year 2013 With Project Traffic Conditions
Saturday Peak Hour

Level Of Service Computation Report
2000 HCM Unsignalized Method (Base Volume Alternative)

Intersection #10 Daley Canyon Road/State Route 18

Average Delay (sec/veh): 7.6 Worst Case Level Of Service: C[21.8]

Approach:	North Bound					South Bound					East Bound					West Bound				
Movement:	L	-	T	-	R	L	-	T	-	R	L	-	T	-	R	L	-	T	-	R
Control:	Stop Sign					Stop Sign					Uncontrolled					Uncontrolled				
Rights:	Include					Include					Include					Include				
Lanes:	0	0	0	0	0	0	0	0	0	1	1	0	1	0	0	0	0	1	0	0
Volume Module:																				
Base Vol:	0	0	0	0	0	0	0	0	0	416	389	509	0	0	0	0	362	0		
Growth Adj:	1.00	1.00	1.00	1.00	1.00	1.00	1.00	1.00	1.00	1.00	1.00	1.00	1.00	1.00	1.00	1.00	1.00	1.00		
Initial Bse:	0	0	0	0	0	0	0	0	0	416	389	509	0	0	0	0	362	0		
User Adj:	1.00	1.00	1.00	1.00	1.00	1.00	1.00	1.00	1.00	1.00	1.00	1.00	1.00	1.00	1.00	1.00	1.00	1.00		
PHF Adj:	1.00	1.00	1.00	1.00	1.00	1.00	1.00	1.00	1.00	0.93	0.94	0.91	1.00	1.00	0.90	1.00				
PHF Volume:	0	0	0	0	0	0	0	0	0	450	413	559	0	0	401	0				
Reduct Vol:	0	0	0	0	0	0	0	0	0	0	0	0	0	0	0	0				
FinalVolume:	0	0	0	0	0	0	0	0	0	450	413	559	0	0	401	0				
Critical Gap Module:																				
Critical Gp:	xxxxx	xxxx	xxxxx	xxxxx	xxxx					6.2	4.1	xxxx	xxxxx	xxxxx	xxxx	xxxxx				
FollowUpTim:	xxxxx	xxxx	xxxxx	xxxxx	xxxx					3.3	2.2	xxxx	xxxxx	xxxxx	xxxx	xxxxx				
Capacity Module:																				
Cnflict Vol:	xxxx	xxxx	xxxxx	xxxx	xxxx					401	401	xxxx	xxxxx	xxxx	xxxx	xxxxx				
Potent Cap.:	xxxx	xxxx	xxxxx	xxxx	xxxx					654	1169	xxxx	xxxxx	xxxx	xxxx	xxxxx				
Move Cap.:	xxxx	xxxx	xxxxx	xxxx	xxxx					654	1169	xxxx	xxxxx	xxxx	xxxx	xxxxx				
Volume/Cap:	xxxx	xxxx	xxxx	xxxx	xxxx					0.69	0.35	xxxx	xxxx	xxxx	xxxx	xxxx				
Level Of Service Module:																				
2Way95thQ:	xxxx	xxxx	xxxxx	xxxx	xxxx					5.5	1.6	xxxx	xxxxx	xxxx	xxxx	xxxxx				
Control Del:	xxxxx	xxxx	xxxxx	xxxxx	xxxx					21.8	9.8	xxxx	xxxxx	xxxxx	xxxx	xxxxx				
LOS by Move:	*	*	*	*	*					C	A	*	*	*	*	*				
Movement:	LT	-	LTR	-	RT	LT	-	LTR	-	RT	LT	-	LTR	-	RT	LT	-	LTR	-	RT
Shared Cap.:	xxxx	xxxx	xxxxx	xxxx	xxxx	xxxxx					xxxx	xxxx	xxxxx	xxxx	xxxx	xxxxx				
SharedQueue:	xxxxx	xxxx	xxxxx	xxxxx	xxxx	xxxxx					xxxxx	xxxx	xxxxx	xxxxx	xxxx	xxxxx				
Shrd ConDel:	xxxxx	xxxx	xxxxx	xxxxx	xxxx	xxxxx					xxxxx	xxxx	xxxxx	xxxxx	xxxx	xxxxx				
Shared LOS:	*	*	*	*	*	*					*	*	*	*	*	*				
ApproachDel:	xxxxxx					21.8					xxxxxx					xxxxxx				
ApproachLOS:	*					C					*					*				

Note: Queue reported is the number of cars per lane.

Church of the Woods
Year 2013 With Project Traffic Conditions
Saturday Peak Hour

Level Of Service Computation Report
2000 HCM Unsignalized Method (Base Volume Alternative)

Intersection #11 Daley Canyon Road/Daley Canyon Access Road

Average Delay (sec/veh): 3.7 Worst Case Level Of Service: B[13.2]

Approach:	North Bound			South Bound			East Bound			West Bound		
Movement:	L	T	R	L	T	R	L	T	R	L	T	R
Control:	Uncontrolled			Uncontrolled			Stop Sign			Stop Sign		
Rights:	Include			Include			Include			Include		
Lanes:	0 0 1	0	0	0 1	0 0	0	0 0 0	0	0	0 0 0	0	1
Volume Module:												
Base Vol:	0	389	0	186	416	0	0	0	0	0	0	180
Growth Adj:	1.00	1.00	1.00	1.00	1.00	1.00	1.00	1.00	1.00	1.00	1.00	1.00
Initial Bse:	0	389	0	186	416	0	0	0	0	0	0	180
User Adj:	1.00	1.00	1.00	1.00	1.00	1.00	1.00	1.00	1.00	1.00	1.00	1.00
PHF Adj:	1.00	0.94	1.00	0.79	0.93	1.00	1.00	1.00	1.00	1.00	1.00	0.88
PHF Volume:	0	413	0	236	450	0	0	0	0	0	0	204
Reduct Vol:	0	0	0	0	0	0	0	0	0	0	0	0
FinalVolume:	0	413	0	236	450	0	0	0	0	0	0	204
Critical Gap Module:												
Critical Gp:	xxxxx	xxxx	xxxxx	4.1	xxxx	xxxxx	xxxxx	xxxx	xxxxx	xxxxx	xxxx	6.2
FollowUpTim:	xxxxx	xxxx	xxxxx	2.2	xxxx	xxxxx	xxxxx	xxxx	xxxxx	xxxxx	xxxx	3.3
Capacity Module:												
Cnflict Vol:	xxxx	xxxx	xxxxx	413	xxxx	xxxxx	xxxx	xxxx	xxxxx	xxxx	xxxx	413
Potent Cap.:	xxxx	xxxx	xxxxx	1156	xxxx	xxxxx	xxxx	xxxx	xxxxx	xxxx	xxxx	643
Move Cap.:	xxxx	xxxx	xxxxx	1156	xxxx	xxxxx	xxxx	xxxx	xxxxx	xxxx	xxxx	643
Volume/Cap:	xxxx	xxxx	xxxx	0.20	xxxx	xxxx	xxxx	xxxx	xxxx	xxxx	xxxx	0.32
Level Of Service Module:												
2Way95thQ:	xxxx	xxxx	xxxxx	0.8	xxxx	xxxxx	xxxx	xxxx	xxxxx	xxxx	xxxx	1.4
Control Del:	xxxxx	xxxx	xxxxx	8.9	xxxx	xxxxx	xxxxx	xxxx	xxxxx	xxxxx	xxxx	13.2
LOS by Move:	*	*	*	A	*	*	*	*	*	*	*	B
Movement:	LT -	LTR -	RT	LT -	LTR -	RT	LT -	LTR -	RT	LT -	LTR -	RT
Shared Cap.:	xxxx	xxxx	xxxxx	xxxx	xxxx	xxxxx	xxxx	xxxx	xxxxx	xxxx	xxxx	xxxxx
SharedQueue:	xxxxx	xxxx	xxxxx	0.8	xxxx	xxxxx	xxxxx	xxxx	xxxxx	xxxxx	xxxx	xxxxx
Shrd ConDel:	xxxxx	xxxx	xxxxx	8.9	xxxx	xxxxx	xxxxx	xxxx	xxxxx	xxxxx	xxxx	xxxxx
Shared LOS:	*	*	*	A	*	*	*	*	*	*	*	*
ApproachDel:	xxxxxx			xxxxxx			xxxxxx			13.2		
ApproachLOS:	*			*			*			B		

Note: Queue reported is the number of cars per lane.

Church of the Woods
Year 2013 With Project Traffic Conditions
Saturday Peak Hour

Level Of Service Computation Report
2000 HCM Unsignalized Method (Base Volume Alternative)

Intersection #12 Daley Canyon Access Road/State Route 18

Average Delay (sec/veh): 9.5 Worst Case Level Of Service: F[56.4]

Approach:	North Bound					South Bound					East Bound					West Bound				
Movement:	L	-	T	-	R	L	-	T	-	R	L	-	T	-	R	L	-	T	-	R
Control:	Stop Sign					Stop Sign					Uncontrolled					Uncontrolled				
Rights:	Include					Include					Include					Include				
Lanes:	0	0	0	0	0	1	0	0	0	0	0	0	1	0	0	0	0	1	0	1
Volume Module:																				
Base Vol:	0	0	0			186	0	0			0	509	0			0	362	180		
Growth Adj:	1.00	1.00	1.00			1.00	1.00	1.00			1.00	1.00	1.00			1.00	1.00	1.00		
Initial Bse:	0	0	0			186	0	0			0	509	0			0	362	180		
User Adj:	1.00	1.00	1.00			1.00	1.00	1.00			1.00	1.00	1.00			1.00	1.00	1.00		
PHF Adj:	1.00	1.00	1.00			0.79	1.00	1.00			1.00	0.91	1.00			1.00	0.90	0.88		
PHF Volume:	0	0	0			236	0	0			0	559	0			0	401	204		
Reduct Vol:	0	0	0			0	0	0			0	0	0			0	0	0		
FinalVolume:	0	0	0			236	0	0			0	559	0			0	401	204		
Critical Gap Module:																				
Critical Gp:	xxxxx	xxxx	xxxxx			6.4	xxxx	xxxxx			xxxxx	xxxx	xxxxx			xxxxx	xxxx	xxxxx		
FollowUpTim:	xxxxx	xxxx	xxxxx			3.5	xxxx	xxxxx			xxxxx	xxxx	xxxxx			xxxxx	xxxx	xxxxx		
Capacity Module:																				
Cnflict Vol:	xxxx	xxxx	xxxxx			960	xxxx	xxxxx			xxxx	xxxx	xxxxx			xxxx	xxxx	xxxxx		
Potent Cap.:	xxxx	xxxx	xxxxx			287	xxxx	xxxxx			xxxx	xxxx	xxxxx			xxxx	xxxx	xxxxx		
Move Cap.:	xxxx	xxxx	xxxxx			287	xxxx	xxxxx			xxxx	xxxx	xxxxx			xxxx	xxxx	xxxxx		
Volume/Cap:	xxxx	xxxx	xxxx			0.82	xxxx	xxxx			xxxx	xxxx	xxxx			xxxx	xxxx	xxxx		
Level Of Service Module:																				
2Way95thQ:	xxxx	xxxx	xxxxx			6.7	xxxx	xxxxx			xxxx	xxxx	xxxxx			xxxx	xxxx	xxxxx		
Control Del:	xxxxx	xxxx	xxxxx			56.4	xxxx	xxxxx			xxxxx	xxxx	xxxxx			xxxxx	xxxx	xxxxx		
LOS by Move:	*	*	*			F	*	*			*	*	*			*	*	*		
Movement:	LT	-	LTR	-	RT	LT	-	LTR	-	RT	LT	-	LTR	-	RT	LT	-	LTR	-	RT
Shared Cap.:	xxxx	xxxx	xxxxx			xxxx	xxxx	xxxxx			xxxx	xxxx	xxxxx			xxxx	xxxx	xxxxx		
SharedQueue:	xxxxx	xxxx	xxxxx			xxxxx	xxxx	xxxxx			xxxxx	xxxx	xxxxx			xxxxx	xxxx	xxxxx		
Shrd ConDel:	xxxxx	xxxx	xxxxx			xxxxx	xxxx	xxxxx			xxxxx	xxxx	xxxxx			xxxxx	xxxx	xxxxx		
Shared LOS:	*	*	*			*	*	*			*	*	*			*	*	*		
ApproachDel:	xxxxxx					56.4					xxxxxx					xxxxxx				
ApproachLOS:	*					F					*					*				

Note: Queue reported is the number of cars per lane.

Church of the Woods
Year 2013 With Project Traffic Conditions
Saturday Peak Hour

Level Of Service Computation Report
2000 HCM Unsignalized Method (Base Volume Alternative)

Intersection #13 State Route 173/State Route 18

Average Delay (sec/veh): 51.2 Worst Case Level Of Service: F[215.9]

Approach:	North Bound			South Bound			East Bound			West Bound		
Movement:	L -	T -	R	L -	T -	R	L -	T -	R	L -	T -	R
Control:	Stop Sign			Stop Sign			Uncontrolled			Uncontrolled		
Rights:	Include			Include			Include			Include		
Lanes:	0 0 0 0 0			0 0 1! 0 0			1 0 1 0 0			0 0 1 0 1		
Volume Module:												
Base Vol:	0	0	0	98	0	169	290	325	0	0	276	104
Growth Adj:	1.00	1.00	1.00	1.00	1.00	1.00	1.00	1.00	1.00	1.00	1.00	1.00
Initial Bse:	0	0	0	98	0	169	290	325	0	0	276	104
User Adj:	1.00	1.00	1.00	1.00	1.00	1.00	1.00	1.00	1.00	1.00	1.00	1.00
PHF Adj:	1.00	1.00	1.00	0.79	0.79	0.79	0.82	0.82	0.82	0.94	0.94	0.94
PHF Volume:	0	0	0	125	0	215	356	399	0	0	294	111
Reduct Vol:	0	0	0	0	0	0	0	0	0	0	0	0
FinalVolume:	0	0	0	125	0	215	356	399	0	0	294	111
Critical Gap Module:												
Critical Gp:	xxxxx	xxxx	xxxxx	6.4	6.5	6.2	4.1	xxxx	xxxxx	xxxxx	xxxx	xxxxx
FollowUpTim:	xxxxx	xxxx	xxxxx	3.5	4.0	3.3	2.2	xxxx	xxxxx	xxxxx	xxxx	xxxxx
Capacity Module:												
Cnflict Vol:	xxxx	xxxx	xxxxx	1405	1405	294	405	xxxx	xxxxx	xxxx	xxxx	xxxxx
Potent Cap.:	xxxx	xxxx	xxxxx	155	141	750	1165	xxxx	xxxxx	xxxx	xxxx	xxxxx
Move Cap.:	xxxx	xxxx	xxxxx	119	98	750	1165	xxxx	xxxxx	xxxx	xxxx	xxxxx
Volume/Cap:	xxxx	xxxx	xxxx	1.05	0.00	0.29	0.31	xxxx	xxxx	xxxx	xxxx	xxxx
Level Of Service Module:												
2Way95thQ:	xxxx	xxxx	xxxxx	xxxx	xxxx	xxxxx	1.3	xxxx	xxxxx	xxxx	xxxx	xxxxx
Control Del:	xxxxx	xxxx	xxxxx	xxxxx	xxxx	xxxxx	9.4	xxxx	xxxxx	xxxxx	xxxx	xxxxx
LOS by Move:	*	*	*	*	*	*	A	*	*	*	*	*
Movement:	LT -	LTR -	RT	LT -	LTR -	RT	LT -	LTR -	RT	LT -	LTR -	RT
Shared Cap.:	xxxx	xxxx	xxxxx	xxxx	254	xxxxx	xxxx	xxxx	xxxxx	xxxx	xxxx	xxxxx
SharedQueue:	xxxxx	xxxx	xxxxx	xxxxx	17.9	xxxxx	xxxxx	xxxx	xxxxx	xxxxx	xxxx	xxxxx
Shrd ConDel:	xxxxx	xxxx	xxxxx	xxxxx	216	xxxxx	xxxxx	xxxx	xxxxx	xxxxx	xxxx	xxxxx
Shared LOS:	*	*	*	*	F	*	*	*	*	*	*	*
ApproachDel:	xxxxxx			215.9			xxxxxx			xxxxxx		
ApproachLOS:	*			F			*			*		

Note: Queue reported is the number of cars per lane.

Church of the Woods
Year 2013 With Project Traffic Conditions
Sunday Peak Hour

Level Of Service Computation Report
2000 HCM Unsignalized Method (Base Volume Alternative)

Intersection #1 North Road/State Route 189

Average Delay (sec/veh): 5.3 Worst Case Level Of Service: B[14.3]

Approach:	North Bound			South Bound			East Bound			West Bound		
Movement:	L	T	R	L	T	R	L	T	R	L	T	R
Control:	Stop Sign			Stop Sign			Uncontrolled			Uncontrolled		
Rights:	Include			Include			Include			Include		
Lanes:	0 0 0 0 0			0 0 1! 0 0			0 1 0 0 0			0 0 0 1 0		
Volume Module:												
Base Vol:	0	0	0	120	0	58	41	87	0	0	161	106
Growth Adj:	1.00	1.00	1.00	1.00	1.00	1.00	1.00	1.00	1.00	1.00	1.00	1.00
Initial Bse:	0	0	0	120	0	58	41	87	0	0	161	106
User Adj:	1.00	1.00	1.00	1.00	1.00	1.00	1.00	1.00	1.00	1.00	1.00	1.00
PHF Adj:	1.00	1.00	1.00	0.77	0.77	0.77	0.86	0.86	0.86	0.85	0.85	0.85
PHF Volume:	0	0	0	156	0	75	48	101	0	0	189	124
Reduct Vol:	0	0	0	0	0	0	0	0	0	0	0	0
FinalVolume:	0	0	0	156	0	75	48	101	0	0	189	124
Critical Gap Module:												
Critical Gp:	xxxxx	xxxx	xxxxx	6.4	6.5	6.2	4.1	xxxx	xxxxx	xxxxx	xxxx	xxxxx
FollowUpTim:	xxxxx	xxxx	xxxxx	3.5	4.0	3.3	2.2	xxxx	xxxxx	xxxxx	xxxx	xxxxx
Capacity Module:												
Cnflict Vol:	xxxx	xxxx	xxxxx	447	447	251	313	xxxx	xxxxx	xxxx	xxxx	xxxxx
Potent Cap.:	xxxx	xxxx	xxxxx	573	509	793	1259	xxxx	xxxxx	xxxx	xxxx	xxxxx
Move Cap.:	xxxx	xxxx	xxxxx	556	490	793	1259	xxxx	xxxxx	xxxx	xxxx	xxxxx
Volume/Cap:	xxxx	xxxx	xxxx	0.28	0.00	0.09	0.04	xxxx	xxxx	xxxx	xxxx	xxxx
Level Of Service Module:												
2Way95thQ:	xxxx	xxxx	xxxxx	xxxx	xxxx	xxxxx	0.1	xxxx	xxxxx	xxxx	xxxx	xxxxx
Control Del:	xxxxx	xxxx	xxxxx	xxxxx	xxxx	xxxxx	8.0	xxxx	xxxxx	xxxxx	xxxx	xxxxx
LOS by Move:	*	*	*	*	*	*	A	*	*	*	*	*
Movement:	LT	LTR	RT	LT	LTR	RT	LT	LTR	RT	LT	LTR	RT
Shared Cap.:	xxxx	xxxx	xxxxx	xxxx	616	xxxxx	xxxx	xxxx	xxxxx	xxxx	xxxx	xxxxx
SharedQueue:	xxxxx	xxxx	xxxxx	xxxxx	1.7	xxxxx	0.1	xxxx	xxxxx	xxxxx	xxxx	xxxxx
Shrd ConDel:	xxxxx	xxxx	xxxxx	xxxxx	14.3	xxxxx	8.0	xxxx	xxxxx	xxxxx	xxxx	xxxxx
Shared LOS:	*	*	*	*	B	*	A	*	*	*	*	*
ApproachDel:	xxxxxx			14.3			xxxxxx			xxxxxx		
ApproachLOS:	*			B			*			*		

Note: Queue reported is the number of cars per lane.

Church of the Woods
Year 2013 With Project Traffic Conditions
Sunday Peak Hour

Level Of Service Computation Report
2000 HCM Unsignalized Method (Base Volume Alternative)

Intersection #2 Bear Springs Road/State Route 189

Average Delay (sec/veh): 4.9 Worst Case Level Of Service: C[15.8]

Approach:	North Bound			South Bound			East Bound			West Bound		
Movement:	L - T - R			L - T - R			L - T - R			L - T - R		
Control:	Stop Sign			Stop Sign			Uncontrolled			Uncontrolled		
Rights:	Include			Include			Include			Include		
Lanes:	0 0 1! 0 0			0 0 1! 0 0			0 0 1! 0 0			0 0 1! 0 0		
Volume Module:												
Base Vol:	33	16	11	38	12	65	46	154	43	13	195	21
Growth Adj:	1.00	1.00	1.00	1.00	1.00	1.00	1.00	1.00	1.00	1.00	1.00	1.00
Initial Bse:	33	16	11	38	12	65	46	154	43	13	195	21
User Adj:	1.00	1.00	1.00	1.00	1.00	1.00	1.00	1.00	1.00	1.00	1.00	1.00
PHF Adj:	0.81	0.81	0.81	0.79	0.79	0.79	0.83	0.83	0.83	0.96	0.96	0.96
PHF Volume:	41	20	14	48	15	82	55	185	52	13	202	22
Reduct Vol:	0	0	0	0	0	0	0	0	0	0	0	0
FinalVolume:	41	20	14	48	15	82	55	185	52	13	202	22
Critical Gap Module:												
Critical Gp:	7.1	6.5	6.2	7.1	6.5	6.2	4.1	xxxx	xxxxx	4.1	xxxx	xxxxx
FollowUpTim:	3.5	4.0	3.3	3.5	4.0	3.3	2.2	xxxx	xxxxx	2.2	xxxx	xxxxx
Capacity Module:												
Cnflict Vol:	610	572	211	578	587	213	224	xxxx	xxxxx	236	xxxx	xxxxx
Potent Cap.:	409	433	835	430	424	832	1357	xxxx	xxxxx	1342	xxxx	xxxxx
Move Cap.:	344	410	835	392	403	832	1357	xxxx	xxxxx	1342	xxxx	xxxxx
Volume/Cap:	0.12	0.05	0.02	0.12	0.04	0.10	0.04	xxxx	xxxx	0.01	xxxx	xxxx
Level Of Service Module:												
2Way95thQ:	xxxx	xxxx	xxxxx	xxxx	xxxx	xxxxx	0.1	xxxx	xxxxx	0.0	xxxx	xxxxx
Control Del:	xxxxx	xxxx	xxxxx	xxxxx	xxxx	xxxxx	7.8	xxxx	xxxxx	7.7	xxxx	xxxxx
LOS by Move:	*	*	*	*	*	*	A	*	*	A	*	*
Movement:	LT - LTR - RT			LT - LTR - RT			LT - LTR - RT			LT - LTR - RT		
Shared Cap.:	xxxx	405	xxxxx	xxxx	561	xxxxx	xxxx	xxxx	xxxxx	xxxx	xxxx	xxxxx
SharedQueue:	xxxxx	0.7	xxxxx	xxxxx	1.0	xxxxx	xxxxx	xxxx	xxxxx	xxxxx	xxxx	xxxxx
Shrd ConDel:	xxxxx	15.8	xxxxx	xxxxx	13.6	xxxxx	xxxxx	xxxx	xxxxx	xxxxx	xxxx	xxxxx
Shared LOS:	*	C	*	*	B	*	*	*	*	*	*	*
ApproachDel:	15.8			13.6			xxxxxx			xxxxxx		
ApproachLOS:	C			B			*			*		

Note: Queue reported is the number of cars per lane.

Church of the Woods
Year 2013 With Project Traffic Conditions
Sunday Peak Hour

Level Of Service Computation Report
2000 HCM Unsignalized Method (Base Volume Alternative)

Intersection #3 Grass Valley Road/State Route 189

Average Delay (sec/veh): 41.3 Worst Case Level Of Service: F[75.8]

Approach:	North Bound			South Bound			East Bound			West Bound		
Movement:	L	T	R	L	T	R	L	T	R	L	T	R
Control:	Stop Sign			Stop Sign			Uncontrolled			Uncontrolled		
Rights:	Include			Include			Include			Include		
Lanes:	0 0 0 0 0			0 0 1! 0 0			1 0 1 0 0			0 0 0 1 0		
Volume Module:												
Base Vol:	0	0	0	406	0	186	76	167	0	0	57	189
Growth Adj:	1.00	1.00	1.00	1.00	1.00	1.00	1.00	1.00	1.00	1.00	1.00	1.00
Initial Bse:	0	0	0	406	0	186	76	167	0	0	57	189
User Adj:	1.00	1.00	1.00	1.00	1.00	1.00	1.00	1.00	1.00	1.00	1.00	1.00
PHF Adj:	1.00	1.00	1.00	0.90	0.90	0.90	0.91	0.91	0.91	0.83	0.83	0.83
PHF Volume:	0	0	0	451	0	207	83	183	0	0	69	229
Reduct Vol:	0	0	0	0	0	0	0	0	0	0	0	0
FinalVolume:	0	0	0	451	0	207	83	183	0	0	69	229
Critical Gap Module:												
Critical Gp:	xxxxx	xxxx	xxxxx	6.4	6.5	6.2	4.1	xxxx	xxxxx	xxxxx	xxxx	xxxxx
FollowUpTim:	xxxxx	xxxx	xxxxx	3.5	4.0	3.3	2.2	xxxx	xxxxx	xxxxx	xxxx	xxxxx
Capacity Module:												
Cnflict Vol:	xxxx	xxxx	xxxxx	534	534	183	298	xxxx	xxxxx	xxxx	xxxx	xxxxx
Potent Cap.:	xxxx	xxxx	xxxxx	511	455	864	1275	xxxx	xxxxx	xxxx	xxxx	xxxxx
Move Cap.:	xxxx	xxxx	xxxxx	485	425	864	1275	xxxx	xxxxx	xxxx	xxxx	xxxxx
Total Cap:	369	437	xxxxx	555	490	xxxxx	xxxx	xxxx	xxxxx	xxxx	xxxx	xxxxx
Volume/Cap:	xxxx	xxxx	xxxx	0.81	0.00	0.24	0.07	xxxx	xxxx	xxxx	xxxx	xxxx
Level Of Service Module:												
2Way95thQ:	xxxx	xxxx	xxxxx	xxxx	xxxx	xxxxx	0.2	xxxx	xxxxx	xxxx	xxxx	xxxxx
Control Del:	xxxxx	xxxx	xxxxx	xxxxx	xxxx	xxxxx	8.0	xxxx	xxxxx	xxxxx	xxxx	xxxxx
LOS by Move:	*	*	*	*	*	*	A	*	*	*	*	*
Movement:	LT	LTR	RT	LT	LTR	RT	LT	LTR	RT	LT	LTR	RT
Shared Cap.:	xxxx	xxxx	xxxxx	xxxx	626	xxxxx	xxxx	xxxx	xxxxx	xxxx	xxxx	xxxxx
SharedQueue:	xxxxx	xxxx	xxxxx	xxxxx	17.8	xxxxx	xxxxx	xxxx	xxxxx	xxxxx	xxxx	xxxxx
Shrd ConDel:	xxxxx	xxxx	xxxxx	xxxxx	75.8	xxxxx	xxxxx	xxxx	xxxxx	xxxxx	xxxx	xxxxx
Shared LOS:	*	*	*	*	F	*	*	*	*	*	*	*
ApproachDel:	xxxxxx				75.8		xxxxxx			xxxxxx		
ApproachLOS:	*				F		*			*		

Note: Queue reported is the number of cars per lane.

Church of the Woods
Year 2013 With Project Traffic Conditions
Sunday Peak Hour

Level Of Service Computation Report
2000 HCM 4-Way Stop Method (Base Volume Alternative)

Intersection #4 Daley Canyon Road/State Route 189

Cycle (sec):	100	Critical Vol./Cap.(X):	1.041
Loss Time (sec):	0 (Y+R=4.0 sec)	Average Delay (sec/veh):	68.5
Optimal Cycle:	0	Level Of Service:	F

Approach:	North Bound			South Bound			East Bound			West Bound		
Movement:	L -	T -	R	L -	T -	R	L -	T -	R	L -	T -	R
Control:	Stop Sign			Stop Sign			Stop Sign			Stop Sign		
Rights:	Include			Include			Include			Include		
Min. Green:	10	10	10	10	10	10	10	10	10	10	10	10
Lanes:	0 1	0 0	0	0 0	0 1	0	0 0	1! 0	0	0 0	0 0	0
Volume Module:												
Base Vol:	189	278	0	0	403	42	196	0	358	0	0	0
Growth Adj:	1.00	1.00	1.00	1.00	1.00	1.00	1.00	1.00	1.00	1.00	1.00	1.00
Initial Bse:	189	278	0	0	403	42	196	0	358	0	0	0
User Adj:	1.00	1.00	1.00	1.00	1.00	1.00	1.00	1.00	1.00	1.00	1.00	1.00
PHF Adj:	0.86	0.86	0.86	0.87	0.87	0.87	0.96	0.96	0.96	1.00	1.00	1.00
PHF Volume:	220	324	0	0	465	48	204	0	373	0	0	0
Reduct Vol:	0	0	0	0	0	0	0	0	0	0	0	0
Reduced Vol:	220	324	0	0	465	48	204	0	373	0	0	0
PCE Adj:	1.00	1.00	1.00	1.00	1.00	1.00	1.00	1.00	1.00	1.00	1.00	1.00
MLF Adj:	1.00	1.00	1.00	1.00	1.00	1.00	1.00	1.00	1.00	1.00	1.00	1.00
FinalVolume:	220	324	0	0	465	48	204	0	373	0	0	0
Saturation Flow Module:												
Adjustment:	1.00	1.00	1.00	1.00	1.00	1.00	1.00	1.00	1.00	1.00	1.00	1.00
Lanes:	0.40	0.60	0.00	0.00	0.91	0.09	0.35	0.00	0.65	0.00	0.00	0.00
Final Sat.:	211	311	0	0	480	50	199	0	363	0	0	0
Capacity Analysis Module:												
Vol/Sat:	1.04	1.04	xxxx	xxxx	0.97	0.97	1.03	xxxx	1.03	xxxx	xxxx	xxxx
Crit Moves:	****				****		****					
Delay/Veh:	76.8	76.8	0.0	0.0	57.8	57.8	70.2	0.0	70.2	0.0	0.0	0.0
Delay Adj:	1.00	1.00	1.00	1.00	1.00	1.00	1.00	1.00	1.00	1.00	1.00	1.00
AdjDel/Veh:	76.8	76.8	0.0	0.0	57.8	57.8	70.2	0.0	70.2	0.0	0.0	0.0
LOS by Move:	F	F	*	*	F	F	F	*	F	*	*	*
ApproachDel:	76.8			57.8			70.2			xxxxxx		
Delay Adj:	1.00			1.00			1.00			xxxxx		
ApprAdjDel:	76.8			57.8			70.2			xxxxxx		
LOS by Appr:	F			F			F			*		
AllWayAvgQ:	9.7	9.7	9.7	7.1	7.1	7.1	9.5	9.5	9.5	0.0	0.0	0.0

Note: Queue reported is the number of cars per lane.

Church of the Woods
Year 2013 With Project Traffic Conditions
Sunday Peak Hour

Level Of Service Computation Report
2000 HCM 4-Way Stop Method (Base Volume Alternative)

Intersection #5 North Bay Road/State Route 189

Cycle (sec):	100	Critical Vol./Cap.(X):	0.707
Loss Time (sec):	0 (Y+R=4.0 sec)	Average Delay (sec/veh):	20.2
Optimal Cycle:	0	Level Of Service:	C

Approach:	North Bound			South Bound			East Bound			West Bound		
Movement:	L -	T -	R	L -	T -	R	L -	T -	R	L -	T -	R
Control:	Stop Sign			Stop Sign			Stop Sign			Stop Sign		
Rights:	Include			Include			Include			Include		
Min. Green:	10	10	10	10	10	10	10	10	10	10	10	10
Lanes:	0 0	0 0	0	1 0	0 0	1	1 0	1 0	0	0 0	0 1	0
Volume Module:												
Base Vol:	0	0	0	82	0	308	231	268	0	0	262	90
Growth Adj:	1.00	1.00	1.00	1.00	1.00	1.00	1.00	1.00	1.00	1.00	1.00	1.00
Initial Bse:	0	0	0	82	0	308	231	268	0	0	262	90
User Adj:	1.00	1.00	1.00	1.00	1.00	1.00	1.00	1.00	1.00	1.00	1.00	1.00
PHF Adj:	1.00	1.00	1.00	0.78	0.78	0.78	0.81	0.81	0.81	0.90	0.90	0.90
PHF Volume:	0	0	0	106	0	397	286	332	0	0	292	100
Reduct Vol:	0	0	0	0	0	0	0	0	0	0	0	0
Reduced Vol:	0	0	0	106	0	397	286	332	0	0	292	100
PCE Adj:	1.00	1.00	1.00	1.00	1.00	1.00	1.00	1.00	1.00	1.00	1.00	1.00
MLF Adj:	1.00	1.00	1.00	1.00	1.00	1.00	1.00	1.00	1.00	1.00	1.00	1.00
FinalVolume:	0	0	0	106	0	397	286	332	0	0	292	100
Saturation Flow Module:												
Adjustment:	1.00	1.00	1.00	1.00	1.00	1.00	1.00	1.00	1.00	1.00	1.00	1.00
Lanes:	0.00	0.00	0.00	1.00	0.00	1.00	1.00	1.00	0.00	0.00	0.74	0.26
Final Sat.:	0	0	0	475	0	563	499	536	0	0	413	142
Capacity Analysis Module:												
Vol/Sat:	xxxx	xxxx	xxxx	0.22	xxxx	0.70	0.57	0.62	xxxx	xxxx	0.71	0.71
Crit Moves:						****		****				****
Delay/Veh:	0.0	0.0	0.0	12.2	0.0	21.6	18.7	19.1	0.0	0.0	22.8	22.8
Delay Adj:	1.00	1.00	1.00	1.00	1.00	1.00	1.00	1.00	1.00	1.00	1.00	1.00
AdjDel/Veh:	0.0	0.0	0.0	12.2	0.0	21.6	18.7	19.1	0.0	0.0	22.8	22.8
LOS by Move:	*	*	*	B	*	C	C	C	*	*	C	C
ApproachDel:	xxxxxx			19.7			18.9			22.8		
Delay Adj:	xxxxx			1.00			1.00			1.00		
ApprAdjDel:	xxxxxx			19.7			18.9			22.8		
LOS by Appr:	*			C			C			C		
AllWayAvgQ:	0.0	0.0	0.0	0.3	0.0	2.0	1.2	1.5	0.0	2.1	2.1	2.1

Note: Queue reported is the number of cars per lane.

Church of the Woods
Year 2013 With Project Traffic Conditions
Sunday Peak Hour

Level Of Service Computation Report
2000 HCM Unsignalized Method (Base Volume Alternative)

Intersection #6 Lake Gregory Road/State Route 189

Average Delay (sec/veh): 14.4 Worst Case Level Of Service: E[40.1]

Approach:	North Bound				South Bound				East Bound				West Bound			
Movement:	L	- T	- R		L	- T	- R		L	- T	- R		L	- T	- R	
Control:	Uncontrolled				Uncontrolled				Stop Sign				Stop Sign			
Rights:	Include				Include				Include				Include			
Lanes:	0 0 0	1	0		0 1 0	0	0		0 0 0	0	0		0 0 1!	0	0	
Volume Module:																
Base Vol:	0	185	42		69	208	0		0	0	0		162	0	79	
Growth Adj:	1.00	1.00	1.00		1.00	1.00	1.00		1.00	1.00	1.00		1.00	1.00	1.00	
Initial Bse:	0	185	42		69	208	0		0	0	0		162	0	79	
User Adj:	1.00	1.00	1.00		1.00	1.00	1.00		1.00	1.00	1.00		1.00	1.00	1.00	
PHF Adj:	0.81	0.81	0.81		0.69	0.69	0.69		1.00	1.00	1.00		0.69	0.69	0.69	
PHF Volume:	0	229	52		100	301	0		0	0	0		235	0	115	
Reduct Vol:	0	0	0		0	0	0		0	0	0		0	0	0	
FinalVolume:	0	229	52		100	301	0		0	0	0		235	0	115	
Critical Gap Module:																
Critical Gp:	xxxxx	xxxx	xxxxx		4.1	xxxx	xxxxx		xxxxx	xxxx	xxxxx		6.4	6.5	6.2	
FollowUpTim:	xxxxx	xxxx	xxxxx		2.2	xxxx	xxxxx		xxxxx	xxxx	xxxxx		3.5	4.0	3.3	
Capacity Module:																
Cnflict Vol:	xxxx	xxxx	xxxxx		281	xxxx	xxxxx		xxxx	xxxx	xxxxx		756	756	255	
Potent Cap.:	xxxx	xxxx	xxxxx		1294	xxxx	xxxxx		xxxx	xxxx	xxxxx		379	340	789	
Move Cap.:	xxxx	xxxx	xxxxx		1294	xxxx	xxxxx		xxxx	xxxx	xxxxx		355	312	789	
Volume/Cap:	xxxx	xxxx	xxxx		0.08	xxxx	xxxx		xxxx	xxxx	xxxx		0.66	0.00	0.15	
Level Of Service Module:																
2Way95thQ:	xxxx	xxxx	xxxxx		0.3	xxxx	xxxxx		xxxx	xxxx	xxxxx		xxxx	xxxx	xxxxx	
Control Del:	xxxxx	xxxx	xxxxx		8.0	xxxx	xxxxx		xxxxx	xxxx	xxxxx		xxxxx	xxxx	xxxxx	
LOS by Move:	*	*	*		A	*	*		*	*	*		*	*	*	
Movement:	LT -	LTR -	RT		LT -	LTR -	RT		LT -	LTR -	RT		LT -	LTR -	RT	
Shared Cap.:	xxxx	xxxx	xxxxx		xxxx	xxxx	xxxxx		xxxx	xxxx	xxxxx		xxxx	433	xxxxx	
SharedQueue:	xxxxx	xxxx	xxxxx		0.3	xxxx	xxxxx		xxxxx	xxxx	xxxxx		xxxxx	7.4	xxxxx	
Shrd ConDel:	xxxxx	xxxx	xxxxx		8.0	xxxx	xxxxx		xxxxx	xxxx	xxxxx		xxxxx	40.1	xxxxx	
Shared LOS:	*	*	*		A	*	*		*	*	*		*	E	*	
ApproachDel:	xxxxxx				xxxxxx				xxxxxx				40.1			
ApproachLOS:	*				*				*				E			

Note: Queue reported is the number of cars per lane.

Church of the Woods
Year 2013 With Project Traffic Conditions
Sunday Peak Hour

Level Of Service Computation Report
2000 HCM Unsignalized Method (Base Volume Alternative)

Intersection #7 Lake Gregory Drive/State Route 18

Average Delay (sec/veh): 5.7 Worst Case Level Of Service: C[21.6]

Approach:	North Bound			South Bound			East Bound			West Bound		
Movement:	L	T	R	L	T	R	L	T	R	L	T	R
Control:	Stop Sign			Stop Sign			Uncontrolled			Uncontrolled		
Rights:	Include			Include			Include			Include		
Lanes:	0 0 0 0 0			1 0 0 0 1			1 0 1 0 0			0 0 1 0 1		
Volume Module:												
Base Vol:	0	0	0	207	0	163	58	314	0	0	560	169
Growth Adj:	1.00	1.00	1.00	1.00	1.00	1.00	1.00	1.00	1.00	1.00	1.00	1.00
Initial Bse:	0	0	0	207	0	163	58	314	0	0	560	169
User Adj:	1.00	1.00	1.00	1.00	1.00	1.00	1.00	1.00	1.00	1.00	1.00	1.00
PHF Adj:	1.00	1.00	1.00	0.89	0.89	0.89	0.92	0.92	0.92	0.84	0.84	0.84
PHF Volume:	0	0	0	233	0	183	63	340	0	0	669	202
Reduct Vol:	0	0	0	0	0	0	0	0	0	0	0	0
FinalVolume:	0	0	0	233	0	183	63	340	0	0	669	202
Critical Gap Module:												
Critical Gp:	xxxxx	xxxx	xxxxx	6.4	xxxx	6.2	4.1	xxxx	xxxxx	xxxxx	xxxx	xxxxx
FollowUpTim:	xxxxx	xxxx	xxxxx	3.5	xxxx	3.3	2.2	xxxx	xxxxx	xxxxx	xxxx	xxxxx
Capacity Module:												
Cnflict Vol:	xxxx	xxxx	xxxxx	1135	xxxx	669	871	xxxx	xxxxx	xxxx	xxxx	xxxxx
Potent Cap.:	xxxx	xxxx	xxxxx	226	xxxx	461	783	xxxx	xxxxx	xxxx	xxxx	xxxxx
Move Cap.:	xxxx	xxxx	xxxxx	212	xxxx	461	783	xxxx	xxxxx	xxxx	xxxx	xxxxx
Total Cap:	141	274	xxxxx	411	367	xxxxx	xxxx	xxxx	xxxxx	xxxx	xxxx	xxxxx
Volume/Cap:	xxxx	xxxx	xxxx	0.57	xxxx	0.40	0.08	xxxx	xxxx	xxxx	xxxx	xxxx
Level Of Service Module:												
2Way95thQ:	xxxx	xxxx	xxxxx	3.4	xxxx	1.9	0.3	xxxx	xxxxx	xxxx	xxxx	xxxxx
Control Del:	xxxxx	xxxx	xxxxx	24.6	xxxx	17.9	10.0	xxxx	xxxxx	xxxxx	xxxx	xxxxx
LOS by Move:	*	*	*	C	*	C	B	*	*	*	*	*
Movement:	LT	LTR	RT	LT	LTR	RT	LT	LTR	RT	LT	LTR	RT
Shared Cap.:	xxxx	xxxx	xxxxx	xxxx	xxxx	xxxxx	xxxx	xxxx	xxxxx	xxxx	xxxx	xxxxx
SharedQueue:	xxxxx	xxxx	xxxxx	xxxxx	xxxx	xxxxx	xxxxx	xxxx	xxxxx	xxxxx	xxxx	xxxxx
Shrd ConDel:	xxxxx	xxxx	xxxxx	xxxxx	xxxx	xxxxx	xxxxx	xxxx	xxxxx	xxxxx	xxxx	xxxxx
Shared LOS:	*	*	*	*	*	*	*	*	*	*	*	*
ApproachDel:	xxxxxx			21.6			xxxxxx			xxxxxx		
ApproachLOS:	*			C			*			*		

Note: Queue reported is the number of cars per lane.

Church of the Woods
Year 2013 With Project Traffic Conditions
Sunday Peak Hour

Level Of Service Computation Report
2000 HCM Unsignalized Method (Base Volume Alternative)

Intersection #8 Bear Springs Road/State Route 18

Average Delay (sec/veh): 11.0 Worst Case Level Of Service: F[93.1]

Approach:	North Bound						South Bound						East Bound						West Bound					
Movement:	L	-	T	-	R		L	-	T	-	R		L	-	T	-	R		L	-	T	-	R	
Control:	Stop Sign						Stop Sign						Uncontrolled						Uncontrolled					
Rights:	Include						Include						Include						Include					
Lanes:	0	0	1!	0	0		0	0	1!	0	0		1	0	0	1	0		1	0	0	1	0	
Volume Module:																								
Base Vol:	17		0		17		55		4		22		19		631		15		12		677		56	
Growth Adj:	1.00	1.00		1.00		1.00	1.00	1.00		1.00		1.00	1.00	1.00		1.00		1.00	1.00	1.00		1.00		1.00
Initial Bse:	17		0		17		55		4		22		19		631		15		12		677		56	
User Adj:	1.00	1.00		1.00		1.00	1.00	1.00		1.00		1.00	1.00	1.00		1.00		1.00	1.00	1.00		1.00		1.00
PHF Adj:	0.50	0.50		0.50		0.40	0.40		0.40			0.40	0.89	0.89		0.89		0.83	0.83		0.83			0.83
PHF Volume:	34		0		34		139		10		55		21		709		17		14		815		67	
Reduct Vol:	0		0		0		0		0		0		0		0		0		0		0		0	
FinalVolume:	34		0		34		139		10		55		21		709		17		14		815		67	
Critical Gap Module:																								
Critical Gp:	7.1	6.5		6.2		7.1	6.5		6.2			4.1	xxxx	xxxxx		4.1	xxxx	xxxxx						
FollowUpTim:	3.5	4.0		3.3		3.5	4.0		3.3			2.2	xxxx	xxxxx		2.2	xxxx	xxxxx						
Capacity Module:																								
Cnflict Vol:	1670	1671		717		1654	1646		848			882	xxxx	xxxxx		726	xxxx	xxxxx						
Potent Cap.:	77		97		433		79		100		364		775	xxxx	xxxxx		886	xxxx	xxxxx					
Move Cap.:	58		93		433		71		96		364		775	xxxx	xxxxx		886	xxxx	xxxxx					
Total Cap:	163		207	xxxxx		187		215	xxxxx			xxxx	xxxx	xxxxx		xxxx	xxxx	xxxxx						
Volume/Cap:	0.21	0.00		0.08		0.74	0.05		0.15			0.03	xxxx		xxxx		0.02	xxxx		xxxx				
Level Of Service Module:																								
2Way95thQ:	xxxx	xxxx	xxxxx			xxxx	xxxx	xxxxx				0.1	xxxx	xxxxx		0.0	xxxx	xxxxx						
Control Del:	xxxxx	xxxx	xxxxx			xxxxx	xxxx	xxxxx				9.8	xxxx	xxxxx		9.1	xxxx	xxxxx						
LOS by Move:	*	*	*			*	*	*				A	*	*		A	*	*						
Movement:	LT	-	LTR	-	RT		LT	-	LTR	-	RT		LT	-	LTR	-	RT		LT	-	LTR	-	RT	
Shared Cap.:	xxxx		237	xxxxx			xxxx		217	xxxxx			xxxx	xxxx	xxxxx		xxxx	xxxx	xxxxx					
SharedQueue:	xxxxx		1.1	xxxxx			xxxxx		8.0	xxxxx			xxxxx	xxxx	xxxxx		xxxxx	xxxx	xxxxx					
Shrd ConDel:	xxxxx		26.2	xxxxx			xxxxx		93.1	xxxxx			xxxxx	xxxx	xxxxx		xxxxx	xxxx	xxxxx					
Shared LOS:	*		D	*			*		F	*			*	*	*		*	*	*					
ApproachDel:			26.2						93.1					xxxxxx					xxxxxx					
ApproachLOS:			D						F					*					*					

Note: Queue reported is the number of cars per lane.

Church of the Woods
Year 2013 With Project Traffic Conditions
Sunday Peak Hour

Level Of Service Computation Report
2000 HCM Unsignalized Method (Base Volume Alternative)

Intersection #9 Project Access/State Route 18

Average Delay (sec/veh): 16.9 Worst Case Level Of Service: F[85.5]

Approach:	North Bound			South Bound			East Bound			West Bound		
Movement:	L	T	R	L	T	R	L	T	R	L	T	R
Control:	Stop Sign			Stop Sign			Uncontrolled			Uncontrolled		
Rights:	Include			Include			Include			Include		
Lanes:	0 0 0 0 0			1 0 0 0 1			1 0 1 0 0			0 0 1 0 1		
Volume Module:												
Base Vol:	0	0	0	260	0	140	140	504	0	0	717	260
Growth Adj:	1.00	1.00	1.00	1.00	1.00	1.00	1.00	1.00	1.00	1.00	1.00	1.00
Initial Bse:	0	0	0	260	0	140	140	504	0	0	717	260
User Adj:	1.00	1.00	1.00	1.00	1.00	1.00	1.00	1.00	1.00	1.00	1.00	1.00
PHF Adj:	1.00	1.00	1.00	0.95	0.95	0.95	0.95	0.85	1.00	1.00	0.89	0.95
PHF Volume:	0	0	0	274	0	147	147	592	0	0	809	274
Reduct Vol:	0	0	0	0	0	0	0	0	0	0	0	0
FinalVolume:	0	0	0	274	0	147	147	592	0	0	809	274
Critical Gap Module:												
Critical Gp:	xxxxx	xxxx	xxxxx	6.4	xxxx	6.2	4.1	xxxx	xxxxx	xxxxx	xxxx	xxxxx
FollowUpTim:	xxxxx	xxxx	xxxxx	3.5	xxxx	3.3	2.2	xxxx	xxxxx	xxxxx	xxxx	xxxxx
Capacity Module:												
Cnflict Vol:	xxxx	xxxx	xxxxx	1696	xxxx	809	1083	xxxx	xxxxx	xxxx	xxxx	xxxxx
Potent Cap.:	xxxx	xxxx	xxxxx	103	xxxx	383	652	xxxx	xxxxx	xxxx	xxxx	xxxxx
Move Cap.:	xxxx	xxxx	xxxxx	85	xxxx	383	652	xxxx	xxxxx	xxxx	xxxx	xxxxx
Total Cap:	28	130	xxxxx	254	228	xxxxx	xxxx	xxxx	xxxxx	xxxx	xxxx	xxxxx
Volume/Cap:	xxxx	xxxx	xxxx	1.08	xxxx	0.38	0.23	xxxx	xxxx	xxxx	xxxx	xxxx
Level Of Service Module:												
2Way95thQ:	xxxx	xxxx	xxxxx	11.4	xxxx	1.8	0.9	xxxx	xxxxx	xxxx	xxxx	xxxxx
Control Del:	xxxxx	xxxx	xxxxx	120.8	xxxx	20.1	12.1	xxxx	xxxxx	xxxxx	xxxx	xxxxx
LOS by Move:	*	*	*	F	*	C	B	*	*	*	*	*
Movement:	LT	LTR	RT	LT	LTR	RT	LT	LTR	RT	LT	LTR	RT
Shared Cap.:	xxxx	xxxx	xxxxx	xxxx	xxxx	xxxxx	xxxx	xxxx	xxxxx	xxxx	xxxx	xxxxx
SharedQueue:	xxxxx	xxxx	xxxxx	xxxxx	xxxx	xxxxx	xxxxx	xxxx	xxxxx	xxxxx	xxxx	xxxxx
Shrd ConDel:	xxxxx	xxxx	xxxxx	xxxxx	xxxx	xxxxx	xxxxx	xxxx	xxxxx	xxxxx	xxxx	xxxxx
Shared LOS:	*	*	*	*	*	*	*	*	*	*	*	*
ApproachDel:	xxxxxx			85.5			xxxxxx			xxxxxx		
ApproachLOS:	*			F			*			*		

Note: Queue reported is the number of cars per lane.

Church of the Woods
Year 2013 With Project Traffic Conditions
Sunday Peak Hour

Level Of Service Computation Report
2000 HCM Unsignalized Method (Base Volume Alternative)

Intersection #10 Daley Canyon Road/State Route 18

Average Delay (sec/veh): 53.1 Worst Case Level Of Service: F[144.2]

Approach:	North Bound					South Bound					East Bound					West Bound				
Movement:	L	-	T	-	R	L	-	T	-	R	L	-	T	-	R	L	-	T	-	R
Control:	Stop Sign					Stop Sign					Uncontrolled					Uncontrolled				
Rights:	Include					Include					Include					Include				
Lanes:	0	0	0	0	0	0	0	0	0	1	1	0	1	0	0	0	0	1	0	0
Volume Module:																				
Base Vol:	0	0	0	0	0	563	382	382	0	0	414	0								
Growth Adj:	1.00	1.00	1.00	1.00	1.00	1.00	1.00	1.00	1.00	1.00	1.00	1.00								
Initial Bse:	0	0	0	0	0	563	382	382	0	0	414	0								
User Adj:	1.00	1.00	1.00	1.00	1.00	1.00	1.00	1.00	1.00	1.00	1.00	1.00								
PHF Adj:	1.00	1.00	1.00	1.00	1.00	0.76	0.86	0.85	1.00	1.00	0.89	1.00								
PHF Volume:	0	0	0	0	0	744	446	449	0	0	467	0								
Reduct Vol:	0	0	0	0	0	0	0	0	0	0	0	0								
FinalVolume:	0	0	0	0	0	744	446	449	0	0	467	0								
Critical Gap Module:																				
Critical Gp:	xxxxx	xxxx	xxxxx	xxxxx	xxxx	6.2	4.1	xxxx	xxxxx	xxxxx	xxxx	xxxxx								
FollowUpTim:	xxxxx	xxxx	xxxxx	xxxxx	xxxx	3.3	2.2	xxxx	xxxxx	xxxxx	xxxx	xxxxx								
Capacity Module:																				
Cnflict Vol:	xxxx	xxxx	xxxxx	xxxx	xxxx	467	467	xxxx	xxxxx	xxxx	xxxx	xxxxx								
Potent Cap.:	xxxx	xxxx	xxxxx	xxxx	xxxx	600	1105	xxxx	xxxxx	xxxx	xxxx	xxxxx								
Move Cap.:	xxxx	xxxx	xxxxx	xxxx	xxxx	600	1105	xxxx	xxxxx	xxxx	xxxx	xxxxx								
Volume/Cap:	xxxx	xxxx	xxxx	xxxx	xxxx	1.24	0.40	xxxx	xxxx	xxxx	xxxx	xxxx								
Level Of Service Module:																				
2Way95thQ:	xxxx	xxxx	xxxxx	xxxx	xxxx	28.0	2.0	xxxx	xxxxx	xxxx	xxxx	xxxxx								
Control Del:	xxxxx	xxxx	xxxxx	xxxxx	xxxx	144.2	10.4	xxxx	xxxxx	xxxxx	xxxx	xxxxx								
LOS by Move:	*	*	*	*	*	F	B	*	*	*	*	*								
Movement:	LT	-	LTR	-	RT	LT	-	LTR	-	RT	LT	-	LTR	-	RT	LT	-	LTR	-	RT
Shared Cap.:	xxxx	xxxx	xxxxx	xxxx	xxxx	xxxxx	xxxx	xxxx	xxxxx	xxxx	xxxx	xxxxx								
SharedQueue:	xxxxx	xxxx	xxxxx	xxxxx	xxxx	xxxxx	xxxxx	xxxx	xxxxx	xxxxx	xxxx	xxxxx								
Shrd ConDel:	xxxxx	xxxx	xxxxx	xxxxx	xxxx	xxxxx	xxxxx	xxxx	xxxxx	xxxxx	xxxx	xxxxx								
Shared LOS:	*	*	*	*	*	*	*	*	*	*	*	*								
ApproachDel:	xxxxxx			144.2			xxxxxx				xxxxxx									
ApproachLOS:	*			F			*				*									

Note: Queue reported is the number of cars per lane.

Church of the Woods
Year 2013 With Project Traffic Conditions
Sunday Peak Hour

Level Of Service Computation Report
2000 HCM Unsignalized Method (Base Volume Alternative)

Intersection #11 Daley Canyon Road/Daley Canyon Access Road

Average Delay (sec/veh): 4.6 Worst Case Level Of Service: C[16.8]

Approach:	North Bound			South Bound			East Bound			West Bound		
Movement:	L	T	R	L	T	R	L	T	R	L	T	R
Control:	Uncontrolled			Uncontrolled			Stop Sign			Stop Sign		
Rights:	Include			Include			Include			Include		
Lanes:	0 0 1	0	0	0 1	0 0	0	0 0 0	0	0	0 0 0	0	1
Volume Module:												
Base Vol:	0	382	0	204	563	0	0	0	0	0	0	163
Growth Adj:	1.00	1.00	1.00	1.00	1.00	1.00	1.00	1.00	1.00	1.00	1.00	1.00
Initial Bse:	0	382	0	204	563	0	0	0	0	0	0	163
User Adj:	1.00	1.00	1.00	1.00	1.00	1.00	1.00	1.00	1.00	1.00	1.00	1.00
PHF Adj:	1.00	0.86	1.00	0.60	0.76	1.00	1.00	1.00	1.00	1.00	1.00	0.52
PHF Volume:	0	446	0	338	744	0	0	0	0	0	0	317
Reduct Vol:	0	0	0	0	0	0	0	0	0	0	0	0
FinalVolume:	0	446	0	338	744	0	0	0	0	0	0	317
Critical Gap Module:												
Critical Gp:	xxxxx	xxxx	xxxxx	4.1	xxxx	xxxxx	xxxxx	xxxx	xxxxx	xxxxx	xxxx	6.2
FollowUpTim:	xxxxx	xxxx	xxxxx	2.2	xxxx	xxxxx	xxxxx	xxxx	xxxxx	xxxxx	xxxx	3.3
Capacity Module:												
Cnflict Vol:	xxxx	xxxx	xxxxx	446	xxxx	xxxxx	xxxx	xxxx	xxxxx	xxxx	xxxx	446
Potent Cap.:	xxxx	xxxx	xxxxx	1125	xxxx	xxxxx	xxxx	xxxx	xxxxx	xxxx	xxxx	616
Move Cap.:	xxxx	xxxx	xxxxx	1125	xxxx	xxxxx	xxxx	xxxx	xxxxx	xxxx	xxxx	616
Volume/Cap:	xxxx	xxxx	xxxx	0.30	xxxx	xxxx	xxxx	xxxx	xxxx	xxxx	xxxx	0.51
Level Of Service Module:												
2Way95thQ:	xxxx	xxxx	xxxxx	1.3	xxxx	xxxxx	xxxx	xxxx	xxxxx	xxxx	xxxx	2.9
Control Del:	xxxxx	xxxx	xxxxx	9.6	xxxx	xxxxx	xxxxx	xxxx	xxxxx	xxxxx	xxxx	16.8
LOS by Move:	*	*	*	A	*	*	*	*	*	*	*	C
Movement:	LT -	LTR -	RT	LT -	LTR -	RT	LT -	LTR -	RT	LT -	LTR -	RT
Shared Cap.:	xxxx	xxxx	xxxxx	xxxx	xxxx	xxxxx	xxxx	xxxx	xxxxx	xxxx	xxxx	xxxxx
SharedQueue:	xxxxx	xxxx	xxxxx	1.3	xxxx	xxxxx	xxxxx	xxxx	xxxxx	xxxxx	xxxx	xxxxx
Shrd ConDel:	xxxxx	xxxx	xxxxx	9.6	xxxx	xxxxx	xxxxx	xxxx	xxxxx	xxxxx	xxxx	xxxxx
Shared LOS:	*	*	*	A	*	*	*	*	*	*	*	*
ApproachDel:	xxxxxx			xxxxxx			xxxxxx			16.8		
ApproachLOS:	*			*			*			C		

Note: Queue reported is the number of cars per lane.

Church of the Woods
Year 2013 With Project Traffic Conditions
Sunday Peak Hour

Level Of Service Computation Report
2000 HCM Unsignalized Method (Base Volume Alternative)

Intersection #12 Daley Canyon Access Road/State Route 18

Average Delay (sec/veh): 26.3 Worst Case Level Of Service: F[122.2]

Approach:	North Bound					South Bound					East Bound					West Bound				
Movement:	L	-	T	-	R	L	-	T	-	R	L	-	T	-	R	L	-	T	-	R
Control:	Stop Sign					Stop Sign					Uncontrolled					Uncontrolled				
Rights:	Include					Include					Include					Include				
Lanes:	0	0	0	0	0	1	0	0	0	0	0	0	1	0	0	0	0	1	0	1
Volume Module:																				
Base Vol:	0	0	0			204	0	0			0	382	0			0	414	163		
Growth Adj:	1.00	1.00	1.00			1.00	1.00	1.00			1.00	1.00	1.00			1.00	1.00	1.00		
Initial Bse:	0	0	0			204	0	0			0	382	0			0	414	163		
User Adj:	1.00	1.00	1.00			1.00	1.00	1.00			1.00	1.00	1.00			1.00	1.00	1.00		
PHF Adj:	1.00	1.00	1.00			0.60	1.00	1.00			1.00	0.85	1.00			1.00	0.89	0.52		
PHF Volume:	0	0	0			338	0	0			0	449	0			0	467	317		
Reduct Vol:	0	0	0			0	0	0			0	0	0			0	0	0		
FinalVolume:	0	0	0			338	0	0			0	449	0			0	467	317		
Critical Gap Module:																				
Critical Gp:	xxxxx	xxxx	xxxxx			6.4	xxxx	xxxxx			xxxxx	xxxx	xxxxx			xxxxx	xxxx	xxxxx		
FollowUpTim:	xxxxx	xxxx	xxxxx			3.5	xxxx	xxxxx			xxxxx	xxxx	xxxxx			xxxxx	xxxx	xxxxx		
Capacity Module:																				
Cnflict Vol:	xxxx	xxxx	xxxxx			916	xxxx	xxxxx			xxxx	xxxx	xxxxx			xxxx	xxxx	xxxxx		
Potent Cap.:	xxxx	xxxx	xxxxx			305	xxxx	xxxxx			xxxx	xxxx	xxxxx			xxxx	xxxx	xxxxx		
Move Cap.:	xxxx	xxxx	xxxxx			305	xxxx	xxxxx			xxxx	xxxx	xxxxx			xxxx	xxxx	xxxxx		
Volume/Cap:	xxxx	xxxx	xxxx			1.11	xxxx	xxxx			xxxx	xxxx	xxxx			xxxx	xxxx	xxxx		
Level Of Service Module:																				
2Way95thQ:	xxxx	xxxx	xxxxx			13.5	xxxx	xxxxx			xxxx	xxxx	xxxxx			xxxx	xxxx	xxxxx		
Control Del:	xxxxx	xxxx	xxxxx			122.2	xxxx	xxxxx			xxxxx	xxxx	xxxxx			xxxxx	xxxx	xxxxx		
LOS by Move:	*	*	*			F	*	*			*	*	*			*	*	*		
Movement:	LT	-	LTR	-	RT	LT	-	LTR	-	RT	LT	-	LTR	-	RT	LT	-	LTR	-	RT
Shared Cap.:	xxxx	xxxx	xxxxx			xxxx	xxxx	xxxxx			xxxx	xxxx	xxxxx			xxxx	xxxx	xxxxx		
SharedQueue:	xxxxx	xxxx	xxxxx			xxxxx	xxxx	xxxxx			xxxxx	xxxx	xxxxx			xxxxx	xxxx	xxxxx		
Shrd ConDel:	xxxxx	xxxx	xxxxx			xxxxx	xxxx	xxxxx			xxxxx	xxxx	xxxxx			xxxxx	xxxx	xxxxx		
Shared LOS:	*	*	*			*	*	*			*	*	*			*	*	*		
ApproachDel:	xxxxxx					122.2					xxxxxx					xxxxxx				
ApproachLOS:	*					F					*					*				

Note: Queue reported is the number of cars per lane.

Church of the Woods
Year 2013 With Project Traffic Conditions
Sunday Peak Hour

Level Of Service Computation Report
2000 HCM Unsignalized Method (Base Volume Alternative)

Intersection #13 State Route 173/State Route 18

Average Delay (sec/veh): 11.8 Worst Case Level Of Service: E[37.3]

Approach:	North Bound					South Bound					East Bound					West Bound				
Movement:	L	-	T	-	R	L	-	T	-	R	L	-	T	-	R	L	-	T	-	R
Control:	Stop Sign					Stop Sign					Uncontrolled					Uncontrolled				
Rights:	Include					Include					Include					Include				
Lanes:	0	0	0	0	0	0	0	1!	0	0	1	0	1	0	0	0	0	1	0	1
Volume Module:																				
Base Vol:	0	0	0	52	0	219	309	197	0	0	202	135								
Growth Adj:	1.00	1.00	1.00	1.00	1.00	1.00	1.00	1.00	1.00	1.00	1.00	1.00								
Initial Bse:	0	0	0	52	0	219	309	197	0	0	202	135								
User Adj:	1.00	1.00	1.00	1.00	1.00	1.00	1.00	1.00	1.00	1.00	1.00	1.00								
PHF Adj:	1.00	1.00	1.00	0.82	0.82	0.82	0.80	0.80	0.80	0.85	0.85	0.85								
PHF Volume:	0	0	0	63	0	266	387	247	0	0	238	159								
Reduct Vol:	0	0	0	0	0	0	0	0	0	0	0	0								
FinalVolume:	0	0	0	63	0	266	387	247	0	0	238	159								
Critical Gap Module:																				
Critical Gp:	xxxxx	xxxx	xxxxx	6.4	6.5	6.2	4.1	xxxx	xxxxx	xxxxx	xxxx	xxxxx								
FollowUpTim:	xxxxx	xxxx	xxxxx	3.5	4.0	3.3	2.2	xxxx	xxxxx	xxxxx	xxxx	xxxxx								
Capacity Module:																				
Cnflict Vol:	xxxx	xxxx	xxxxx	1260	1260	238	397	xxxx	xxxxx	xxxx	xxxx	xxxxx								
Potent Cap.:	xxxx	xxxx	xxxxx	190	172	806	1172	xxxx	xxxxx	xxxx	xxxx	xxxxx								
Move Cap.:	xxxx	xxxx	xxxxx	141	115	806	1172	xxxx	xxxxx	xxxx	xxxx	xxxxx								
Volume/Cap:	xxxx	xxxx	xxxx	0.45	0.00	0.33	0.33	xxxx	xxxx	xxxx	xxxx	xxxx								
Level Of Service Module:																				
2Way95thQ:	xxxx	xxxx	xxxxx	xxxx	xxxx	xxxxx	1.5	xxxx	xxxxx	xxxx	xxxx	xxxxx								
Control Del:	xxxxx	xxxx	xxxxx	xxxxx	xxxx	xxxxx	9.6	xxxx	xxxxx	xxxxx	xxxx	xxxxx								
LOS by Move:	*	*	*	*	*	*	A	*	*	*	*	*								
Movement:	LT	-	LTR	-	RT	LT	-	LTR	-	RT	LT	-	LTR	-	RT	LT	-	LTR	-	RT
Shared Cap.:	xxxx	xxxx	xxxxx	xxxx	424	xxxxx	xxxx	xxxx	xxxxx	xxxx	xxxx	xxxxx								
SharedQueue:	xxxxx	xxxx	xxxxx	xxxxx	6.7	xxxxx	xxxxx	xxxx	xxxxx	xxxxx	xxxx	xxxxx								
Shrd ConDel:	xxxxx	xxxx	xxxxx	xxxxx	37.3	xxxxx	xxxxx	xxxx	xxxxx	xxxxx	xxxx	xxxxx								
Shared LOS:	*	*	*	*	E	*	*	*	*	*	*	*								
ApproachDel:	xxxxxx				37.3		xxxxxx				xxxxxx									
ApproachLOS:	*				E		*				*									

Note: Queue reported is the number of cars per lane.

YEAR 2030 WITHOUT PROJECT CONDITIONS

Church of the Woods
Year 2030 Without Project Traffic Conditions
Saturday Peak Hour

Level Of Service Computation Report
2000 HCM Unsignalized Method (Base Volume Alternative)

Intersection #1 North Road/State Route 189

Average Delay (sec/veh): 18.8 Worst Case Level Of Service: F[53.7]

Approach:	North Bound			South Bound			East Bound			West Bound		
Movement:	L	T	R	L	T	R	L	T	R	L	T	R
Control:	Stop Sign			Stop Sign			Uncontrolled			Uncontrolled		
Rights:	Include			Include			Include			Include		
Lanes:	0 0 0 0 0			0 0 1! 0 0			0 1 0 0 0			0 0 0 1 0		
Volume Module:												
Base Vol:	0	0	0	286	0	87	64	214	0	0	205	237
Growth Adj:	1.00	1.00	1.00	1.00	1.00	1.00	1.00	1.00	1.00	1.00	1.00	1.00
Initial Bse:	0	0	0	286	0	87	64	214	0	0	205	237
User Adj:	1.00	1.00	1.00	1.00	1.00	1.00	1.00	1.00	1.00	1.00	1.00	1.00
PHF Adj:	0.95	0.95	0.95	0.95	0.95	0.95	0.95	0.95	0.95	0.95	0.95	0.95
PHF Volume:	0	0	0	301	0	92	67	225	0	0	216	249
Reduct Vol:	0	0	0	0	0	0	0	0	0	0	0	0
FinalVolume:	0	0	0	301	0	92	67	225	0	0	216	249
Critical Gap Module:												
Critical Gp:	xxxxx	xxxx	xxxxx	6.4	6.5	6.2	4.1	xxxx	xxxxx	xxxxx	xxxx	xxxxx
FollowUpTim:	xxxxx	xxxx	xxxxx	3.5	4.0	3.3	2.2	xxxx	xxxxx	xxxxx	xxxx	xxxxx
Capacity Module:												
Cnflict Vol:	xxxx	xxxx	xxxxx	701	701	341	465	xxxx	xxxxx	xxxx	xxxx	xxxxx
Potent Cap.:	xxxx	xxxx	xxxxx	408	366	706	1107	xxxx	xxxxx	xxxx	xxxx	xxxxx
Move Cap.:	xxxx	xxxx	xxxxx	389	343	706	1107	xxxx	xxxxx	xxxx	xxxx	xxxxx
Volume/Cap:	xxxx	xxxx	xxxx	0.77	0.00	0.13	0.06	xxxx	xxxx	xxxx	xxxx	xxxx
Level Of Service Module:												
2Way95thQ:	xxxx	xxxx	xxxxx	xxxx	xxxx	xxxxx	0.2	xxxx	xxxxx	xxxx	xxxx	xxxxx
Control Del:	xxxxx	xxxx	xxxxx	xxxxx	xxxx	xxxxx	8.5	xxxx	xxxxx	xxxxx	xxxx	xxxxx
LOS by Move:	*	*	*	*	*	*	A	*	*	*	*	*
Movement:	LT	LTR	RT	LT	LTR	RT	LT	LTR	RT	LT	LTR	RT
Shared Cap.:	xxxx	xxxx	xxxxx	xxxx	434	xxxxx	xxxx	xxxx	xxxxx	xxxx	xxxx	xxxxx
SharedQueue:	xxxxx	xxxx	xxxxx	xxxxx	9.8	xxxxx	0.2	xxxx	xxxxx	xxxxx	xxxx	xxxxx
Shrd ConDel:	xxxxx	xxxx	xxxxx	xxxxx	53.7	xxxxx	8.5	xxxx	xxxxx	xxxxx	xxxx	xxxxx
Shared LOS:	*	*	*	*	F	*	A	*	*	*	*	*
ApproachDel:	xxxxxx			53.7			xxxxxx			xxxxxx		
ApproachLOS:	*			F			*			*		

Note: Queue reported is the number of cars per lane.

Church of the Woods
Year 2030 Without Project Traffic Conditions
Saturday Peak Hour

Level Of Service Computation Report
2000 HCM Unsignalized Method (Base Volume Alternative)

Intersection #2 Bear Springs Road/State Route 189

Average Delay (sec/veh): 8.6 Worst Case Level Of Service: D[30.0]

Approach:	North Bound						South Bound						East Bound						West Bound					
Movement:	L	-	T	-	R		L	-	T	-	R		L	-	T	-	R		L	-	T	-	R	
Control:	Stop Sign						Stop Sign						Uncontrolled						Uncontrolled					
Rights:	Include						Include						Include						Include					
Lanes:	0	0	1!	0	0		0	0	1!	0	0		0	0	1!	0	0		0	0	1!	0	0	
Volume Module:																								
Base Vol:	35	30		24		60	23		104				111	284		54		17	279		55			
Growth Adj:	1.00	1.00		1.00		1.00	1.00		1.00				1.00	1.00		1.00		1.00	1.00		1.00			
Initial Bse:	35	30		24		60	23		104				111	284		54		17	279		55			
User Adj:	1.00	1.00		1.00		1.00	1.00		1.00				1.00	1.00		1.00		1.00	1.00		1.00			
PHF Adj:	0.95	0.95		0.95		0.95	0.95		0.95				0.95	0.95		0.95		0.95	0.95		0.95			
PHF Volume:	37	32		25		63	24		109				117	299		57		18	294		58			
Reduct Vol:	0	0		0		0	0		0				0	0		0		0	0		0			
FinalVolume:	37	32		25		63	24		109				117	299		57		18	294		58			
Critical Gap Module:																								
Critical Gp:	7.1	6.5		6.2		7.1	6.5		6.2				4.1	xxxx		xxxxx		4.1	xxxx		xxxxx			
FollowUpTim:	3.5	4.0		3.3		3.5	4.0		3.3				2.2	xxxx		xxxxx		2.2	xxxx		xxxxx			
Capacity Module:																								
Cnflict Vol:	986	948		327		948	948		323				352	xxxx		xxxxx		356	xxxx		xxxxx			
Potent Cap.:	229	263		719		243	263		723				1218	xxxx		xxxxx		1214	xxxx		xxxxx			
Move Cap.:	163	232		719		192	233		723				1218	xxxx		xxxxx		1214	xxxx		xxxxx			
Volume/Cap:	0.23	0.14		0.04		0.33	0.10		0.15				0.10	xxxx		xxxx		0.01	xxxx		xxxx			
Level Of Service Module:																								
2Way95thQ:	xxxx	xxxx		xxxxx		xxxx	xxxx		xxxxx				0.3	xxxx		xxxxx		0.0	xxxx		xxxxx			
Control Del:	xxxxx	xxxx		xxxxx		xxxxx	xxxx		xxxxx				8.3	xxxx		xxxxx		8.0	xxxx		xxxxx			
LOS by Move:	*	*		*		*	*		*				A	*		*		A	*		*			
Movement:	LT	-	LTR	-	RT		LT	-	LTR	-	RT		LT	-	LTR	-	RT		LT	-	LTR	-	RT	
Shared Cap.:	xxxx		236	xxxxx			xxxx		336	xxxxx			xxxx	xxxx		xxxxx			xxxx	xxxx		xxxxx		
SharedQueue:	xxxxx		1.8	xxxxx			xxxxx		3.5	xxxxx			xxxxx	xxxx		xxxxx			xxxxx	xxxx		xxxxx		
Shrd ConDel:	xxxxx		30.0	xxxxx			xxxxx		29.7	xxxxx			xxxxx	xxxx		xxxxx			xxxxx	xxxx		xxxxx		
Shared LOS:	*		D	*			*		D	*			*	*		*			*	*		*		
ApproachDel:			30.0						29.7					xxxxxx						xxxxxx				
ApproachLOS:			D						D					*						*				

Note: Queue reported is the number of cars per lane.

Church of the Woods
Year 2030 Without Project Traffic Conditions
Saturday Peak Hour

Level Of Service Computation Report
2000 HCM Unsignalized Method (Base Volume Alternative)

Intersection #3 Grass Valley Road/State Route 189

Average Delay (sec/veh): 319.4 Worst Case Level Of Service: F[607.6]

Approach:	North Bound					South Bound					East Bound					West Bound				
Movement:	L	-	T	-	R	L	-	T	-	R	L	-	T	-	R	L	-	T	-	R
Control:	Stop Sign					Stop Sign					Uncontrolled					Uncontrolled				
Rights:	Include					Include					Include					Include				
Lanes:	0	0	0	0	0	0	0	1!	0	0	1	0	1	0	0	0	0	0	1	0
Volume Module:																				
Base Vol:	0	0	0			543	0		416		203	270		0		0	110		288	
Growth Adj:	1.00	1.00	1.00			1.00	1.00		1.00		1.00	1.00		1.00		1.00	1.00		1.00	
Initial Bse:	0	0	0			543	0		416		203	270		0		0	110		288	
User Adj:	1.00	1.00	1.00			1.00	1.00		1.00		1.00	1.00		1.00		1.00	1.00		1.00	
PHF Adj:	0.95	0.95	0.95			0.95	0.95		0.95		0.95	0.95		0.95		0.95	0.95		0.95	
PHF Volume:	0	0	0			572	0		438		214	284		0		0	116		303	
Reduct Vol:	0	0	0			0	0		0		0	0		0		0	0		0	
FinalVolume:	0	0	0			572	0		438		214	284		0		0	116		303	
Critical Gap Module:																				
Critical Gp:	xxxxx	xxxx	xxxxx			6.4	6.5		6.2		4.1	xxxx	xxxxx	xxxxx		xxxx	xxxxx			
FollowUpTim:	xxxxx	xxxx	xxxxx			3.5	4.0		3.3		2.2	xxxx	xxxxx	xxxxx		xxxx	xxxxx			
Capacity Module:																				
Cnflict Vol:	xxxx	xxxx	xxxxx			979	979		267		419	xxxx	xxxxx	xxxx		xxxx	xxxxx			
Potent Cap.:	xxxx	xxxx	xxxxx			280	252		776		1151	xxxx	xxxxx	xxxx		xxxx	xxxxx			
Move Cap.:	xxxx	xxxx	xxxxx			240	205		776		1151	xxxx	xxxxx	xxxx		xxxx	xxxxx			
Total Cap:	0	244	xxxxx			331	293		xxxxx		xxxx	xxxx	xxxxx	xxxx		xxxx	xxxxx			
Volume/Cap:	xxxx	xxxx	xxxx			1.73	0.00		0.56		0.19	xxxx	xxxx	xxxx		xxxx	xxxx			
Level Of Service Module:																				
2Way95thQ:	xxxx	xxxx	xxxxx			xxxx	xxxx		xxxxx		0.7	xxxx	xxxxx	xxxx		xxxx	xxxxx			
Control Del:	xxxxx	xxxx	xxxxx			xxxxx	xxxx		xxxxx		8.8	xxxx	xxxxx	xxxxx		xxxx	xxxxx			
LOS by Move:	*	*	*			*	*		*		A	*	*	*		*	*			
Movement:	LT	-	LTR	-	RT	LT	-	LTR	-	RT	LT	-	LTR	-	RT	LT	-	LTR	-	RT
Shared Cap.:	xxxx	xxxx	xxxxx			xxxx	441		xxxxx		xxxx	xxxx	xxxxx	xxxx		xxxx	xxxxx			
SharedQueue:	xxxxx	xxxx	xxxxx			xxxxx	76.0		xxxxx		xxxxx	xxxx	xxxxx	xxxxx		xxxx	xxxxx			
Shrd ConDel:	xxxxx	xxxx	xxxxx			xxxxx	608		xxxxx		xxxxx	xxxx	xxxxx	xxxxx		xxxx	xxxxx			
Shared LOS:	*	*	*			*	F		*		*	*		*		*	*			
ApproachDel:	xxxxxx					607.6					xxxxxx					xxxxxx				
ApproachLOS:	*					F					*					*				

Note: Queue reported is the number of cars per lane.

Church of the Woods
Year 2030 Without Project Traffic Conditions
Saturday Peak Hour

Level Of Service Computation Report
2000 HCM 4-Way Stop Method (Base Volume Alternative)

Intersection #4 Daley Canyon Road/State Route 189

Cycle (sec): 100 Critical Vol./Cap.(X): 1.760
Loss Time (sec): 0 (Y+R=4.0 sec) Average Delay (sec/veh): 265.3
Optimal Cycle: 0 Level Of Service: F

Approach:	North Bound				South Bound				East Bound				West Bound			
Movement:	L	- T	- R		L	- T	- R		L	- T	- R		L	- T	- R	
Control:	Stop Sign				Stop Sign				Stop Sign				Stop Sign			
Rights:	Include				Include				Include				Include			
Min. Green:	10	10	10		10	10	10		10	10	10		10	10	10	
Lanes:	0 1	0 0	0		0 0	0 1	0		0 0	1! 0	0		0 0	0 0	0	
Volume Module:																
Base Vol:	298	572	0	0	426	97	401	0	415	0	0	0				
Growth Adj:	1.00	1.00	1.00	1.00	1.00	1.00	1.00	1.00	1.00	1.00	1.00	1.00				
Initial Bse:	298	572	0	0	426	97	401	0	415	0	0	0				
User Adj:	1.00	1.00	1.00	1.00	1.00	1.00	1.00	1.00	1.00	1.00	1.00	1.00				
PHF Adj:	0.95	0.95	0.95	0.95	0.95	0.95	0.95	0.95	0.95	0.95	0.95	0.95				
PHF Volume:	314	602	0	0	448	102	422	0	437	0	0	0				
Reduct Vol:	0	0	0	0	0	0	0	0	0	0	0	0				
Reduced Vol:	314	602	0	0	448	102	422	0	437	0	0	0				
PCE Adj:	1.00	1.00	1.00	1.00	1.00	1.00	1.00	1.00	1.00	1.00	1.00	1.00				
MLF Adj:	1.00	1.00	1.00	1.00	1.00	1.00	1.00	1.00	1.00	1.00	1.00	1.00				
FinalVolume:	314	602	0	0	448	102	422	0	437	0	0	0				
Saturation Flow Module:																
Adjustment:	1.00	1.00	1.00	1.00	1.00	1.00	1.00	1.00	1.00	1.00	1.00	1.00				
Lanes:	0.34	0.66	0.00	0.00	0.81	0.19	0.49	0.00	0.51	0.00	0.00	0.00				
Final Sat.:	178	342	0	0	435	99	270	0	279	0	0	0				
Capacity Analysis Module:																
Vol/Sat:	1.76	1.76	xxxx	xxxx	1.03	1.03	1.56	xxxx	1.56	xxxx	xxxx	xxxx				
Crit Moves:	****				****		****									
Delay/Veh:	367.1	367	0.0	0.0	72.9	72.9	280.1	0.0	280.1	0.0	0.0	0.0				
Delay Adj:	1.00	1.00	1.00	1.00	1.00	1.00	1.00	1.00	1.00	1.00	1.00	1.00				
AdjDel/Veh:	367.1	367	0.0	0.0	72.9	72.9	280.1	0.0	280.1	0.0	0.0	0.0				
LOS by Move:	F	F	*	*	F	F	F	*	F	*	*	*				
ApproachDel:	367.1				72.9		280.1			xxxxxx						
Delay Adj:	1.00				1.00		1.00			xxxxx						
ApprAdjDel:	367.1				72.9		280.1			xxxxxx						
LOS by Appr:	F				F		F			*						
AllWayAvgQ:	51.6	51.6	51.6	9.4	9.4	9.4	41.3	41.3	41.3	0.0	0.0	0.0				

Note: Queue reported is the number of cars per lane.

Church of the Woods
Year 2030 Without Project Traffic Conditions
Saturday Peak Hour

Level Of Service Computation Report
2000 HCM 4-Way Stop Method (Base Volume Alternative)

Intersection #5 North Bay Road/State Route 189

Cycle (sec):	100	Critical Vol./Cap.(X):	1.149
Loss Time (sec):	0 (Y+R=4.0 sec)	Average Delay (sec/veh):	61.5
Optimal Cycle:	0	Level Of Service:	F

Approach:	North Bound			South Bound			East Bound			West Bound		
Movement:	L -	T -	R	L -	T -	R	L -	T -	R	L -	T -	R
Control:	Stop Sign			Stop Sign			Stop Sign			Stop Sign		
Rights:	Include			Include			Include			Include		
Min. Green:	10	10	10	10	10	10	10	10	10	10	10	10
Lanes:	0 0	0 0	0	1 0	0 0	1	1 0	1 0	0	0 0	0 1	0
Volume Module:												
Base Vol:	0	0	0	235	0	468	496	412	0	0	281	177
Growth Adj:	1.00	1.00	1.00	1.00	1.00	1.00	1.00	1.00	1.00	1.00	1.00	1.00
Initial Bse:	0	0	0	235	0	468	496	412	0	0	281	177
User Adj:	1.00	1.00	1.00	1.00	1.00	1.00	1.00	1.00	1.00	1.00	1.00	1.00
PHF Adj:	0.95	0.95	0.95	0.95	0.95	0.95	0.95	0.95	0.95	0.95	0.95	0.95
PHF Volume:	0	0	0	247	0	493	522	434	0	0	296	186
Reduct Vol:	0	0	0	0	0	0	0	0	0	0	0	0
Reduced Vol:	0	0	0	247	0	493	522	434	0	0	296	186
PCE Adj:	1.00	1.00	1.00	1.00	1.00	1.00	1.00	1.00	1.00	1.00	1.00	1.00
MLF Adj:	1.00	1.00	1.00	1.00	1.00	1.00	1.00	1.00	1.00	1.00	1.00	1.00
FinalVolume:	0	0	0	247	0	493	522	434	0	0	296	186
Saturation Flow Module:												
Adjustment:	1.00	1.00	1.00	1.00	1.00	1.00	1.00	1.00	1.00	1.00	1.00	1.00
Lanes:	0.00	0.00	0.00	1.00	0.00	1.00	1.00	1.00	0.00	0.00	0.61	0.39
Final Sat.:	0	0	0	451	0	529	455	486	0	0	318	200
Capacity Analysis Module:												
Vol/Sat:	xxxx	xxxx	xxxx	0.55	xxxx	0.93	1.15	0.89	xxxx	xxxx	0.93	0.93
Crit Moves:						****	****				****	
Delay/Veh:	0.0	0.0	0.0	19.9	0.0	49.4	115.8	45.7	0.0	0.0	50.5	50.5
Delay Adj:	1.00	1.00	1.00	1.00	1.00	1.00	1.00	1.00	1.00	1.00	1.00	1.00
AdjDel/Veh:	0.0	0.0	0.0	19.9	0.0	49.4	115.8	45.7	0.0	0.0	50.5	50.5
LOS by Move:	*	*	*	C	*	E	F	E	*	*	F	F
ApproachDel:	xxxxxx			39.5			84.0			50.5		
Delay Adj:	xxxxx			1.00			1.00			1.00		
ApprAdjDel:	xxxxxx			39.5			84.0			50.5		
LOS by Appr:	*			E			F			F		
AllWayAvgQ:	0.0	0.0	0.0	1.2	0.0	5.9	13.3	4.8	0.0	5.8	5.8	5.8

Note: Queue reported is the number of cars per lane.

Church of the Woods
Year 2030 Without Project Traffic Conditions
Saturday Peak Hour

Level Of Service Computation Report
2000 HCM Unsignalized Method (Base Volume Alternative)

Intersection #6 Lake Gregory Road/State Route 189

Average Delay (sec/veh): 5.7 Worst Case Level Of Service: C[23.9]

Approach:	North Bound					South Bound					East Bound					West Bound				
Movement:	L	-	T	-	R	L	-	T	-	R	L	-	T	-	R	L	-	T	-	R
Control:	Uncontrolled					Uncontrolled					Stop Sign					Stop Sign				
Rights:	Include					Include					Include					Include				
Lanes:	0	0	0	1	0	0	1	0	0	0	0	0	0	0	0	0	0	1!	0	0
Volume Module:																				
Base Vol:	0	257		86		131	351		0		0		0		0	93		0		107
Growth Adj:	1.00	1.00		1.00		1.00	1.00		1.00		1.00		1.00		1.00	1.00		1.00		1.00
Initial Bse:	0	257		86		131	351		0		0		0		0	93		0		107
User Adj:	1.00	1.00		1.00		1.00	1.00		1.00		1.00		1.00		1.00	1.00		1.00		1.00
PHF Adj:	0.95	0.95		0.95		0.95	0.95		0.95		0.95		0.95		0.95	0.95		0.95		0.95
PHF Volume:	0	271		91		138	369		0		0		0		0	98		0		113
Reduct Vol:	0	0		0		0	0		0		0		0		0	0		0		0
FinalVolume:	0	271		91		138	369		0		0		0		0	98		0		113
Critical Gap Module:																				
Critical Gp:	xxxxx	xxxx		xxxxx		4.1	xxxx		xxxxx		xxxxx		xxxx		xxxxx	6.4		6.5		6.2
FollowUpTim:	xxxxx	xxxx		xxxxx		2.2	xxxx		xxxxx		xxxxx		xxxx		xxxxx	3.5		4.0		3.3
Capacity Module:																				
Cnflict Vol:	xxxx	xxxx		xxxxx		361	xxxx		xxxxx		xxxx		xxxx		xxxxx	961		961		316
Potent Cap.:	xxxx	xxxx		xxxxx		1209	xxxx		xxxxx		xxxx		xxxx		xxxxx	287		258		729
Move Cap.:	xxxx	xxxx		xxxxx		1209	xxxx		xxxxx		xxxx		xxxx		xxxxx	260		227		729
Volume/Cap:	xxxx	xxxx		xxxx		0.11	xxxx		xxxx		xxxx		xxxx		xxxx	0.38		0.00		0.15
Level Of Service Module:																				
2Way95thQ:	xxxx	xxxx		xxxxx		0.4	xxxx		xxxxx		xxxx		xxxx		xxxxx	xxxx		xxxx		xxxxx
Control Del:	xxxxx	xxxx		xxxxx		8.4	xxxx		xxxxx		xxxxx		xxxx		xxxxx	xxxxx		xxxx		xxxxx
LOS by Move:	*	*		*		A	*		*		*		*		*	*		*		*
Movement:	LT	-	LTR	-	RT	LT	-	LTR	-	RT	LT	-	LTR	-	RT	LT	-	LTR	-	RT
Shared Cap.:	xxxx	xxxx		xxxxx		xxxx	xxxx		xxxxx		xxxx		xxxx		xxxxx	xxxx		396		xxxxx
SharedQueue:	xxxxx	xxxx		xxxxx		0.4	xxxx		xxxxx		xxxxx		xxxx		xxxxx	xxxxx		3.0		xxxxx
Shrd ConDel:	xxxxx	xxxx		xxxxx		8.4	xxxx		xxxxx		xxxxx		xxxx		xxxxx	xxxxx		23.9		xxxxx
Shared LOS:	*	*		*		A	*		*		*		*		*	*		C		*
ApproachDel:	xxxxxx					xxxxxx					xxxxxx					23.9				
ApproachLOS:	*					*					*					C				

Note: Queue reported is the number of cars per lane.

Church of the Woods
Year 2030 Without Project Traffic Conditions
Saturday Peak Hour

Level Of Service Computation Report
2000 HCM Unsignalized Method (Base Volume Alternative)

Intersection #7 Lake Gregory Drive/State Route 18

Average Delay (sec/veh): 30.1 Worst Case Level Of Service: F[125.9]

Approach:	North Bound					South Bound					East Bound					West Bound				
Movement:	L	-	T	-	R	L	-	T	-	R	L	-	T	-	R	L	-	T	-	R
Control:	Stop Sign					Stop Sign					Uncontrolled					Uncontrolled				
Rights:	Include					Include					Include					Include				
Lanes:	0	0	0	0	0	1	0	0	0	1	1	0	1	0	0	0	0	1	0	1
Volume Module:																				
Base Vol:	0	0	0			327	0		118		148	565		0		0	562		195	
Growth Adj:	1.00	1.00	1.00			1.00	1.00		1.00		1.00	1.00		1.00		1.00	1.00		1.00	
Initial Bse:	0	0	0			327	0		118		148	565		0		0	562		195	
User Adj:	1.00	1.00	1.00			1.00	1.00		1.00		1.00	1.00		1.00		1.00	1.00		1.00	
PHF Adj:	0.95	0.95	0.95			0.95	0.95		0.95		0.95	0.95		0.95		0.95	0.95		0.95	
PHF Volume:	0	0	0			344	0		124		156	595		0		0	592		205	
Reduct Vol:	0	0	0			0	0		0		0	0		0		0	0		0	
FinalVolume:	0	0	0			344	0		124		156	595		0		0	592		205	
Critical Gap Module:																				
Critical Gp:	xxxxx	xxxx	xxxxx			6.4	xxxx		6.2		4.1	xxxx	xxxxx	xxxxx		xxxx	xxxxx			
FollowUpTim:	xxxxx	xxxx	xxxxx			3.5	xxxx		3.3		2.2	xxxx	xxxxx	xxxxx		xxxx	xxxxx			
Capacity Module:																				
Cnflict Vol:	xxxx	xxxx	xxxxx			1498	xxxx		592		797	xxxx	xxxxx	xxxx		xxxx	xxxxx			
Potent Cap.:	xxxx	xxxx	xxxxx			136	xxxx		510		834	xxxx	xxxxx	xxxx		xxxx	xxxxx			
Move Cap.:	xxxx	xxxx	xxxxx			117	xxxx		510		834	xxxx	xxxxx	xxxx		xxxx	xxxxx			
Total Cap:	130	191	xxxxx			281	252		xxxxx		xxxx	xxxx	xxxxx	xxxx		xxxx	xxxxx			
Volume/Cap:	xxxx	xxxx	xxxx			1.22	xxxx		0.24		0.19	xxxx	xxxx	xxxx		xxxx	xxxx			
Level Of Service Module:																				
2Way95thQ:	xxxx	xxxx	xxxxx			16.0	xxxx		0.9		0.7	xxxx	xxxxx	xxxx		xxxx	xxxxx			
Control Del:	xxxxx	xxxx	xxxxx			166.2	xxxx		14.3		10.3	xxxx	xxxxx	xxxxx		xxxx	xxxxx			
LOS by Move:	*	*	*			F	*		B		B	*	*	*		*	*			
Movement:	LT	-	LTR	-	RT	LT	-	LTR	-	RT	LT	-	LTR	-	RT	LT	-	LTR	-	RT
Shared Cap.:	xxxx	xxxx	xxxxx			xxxx	xxxx	xxxxx			xxxx	xxxx	xxxxx			xxxx	xxxx	xxxxx		
SharedQueue:	xxxxx	xxxx	xxxxx			xxxxx	xxxx	xxxxx			xxxxx	xxxx	xxxxx			xxxxx	xxxx	xxxxx		
Shrd ConDel:	xxxxx	xxxx	xxxxx			xxxxx	xxxx	xxxxx			xxxxx	xxxx	xxxxx			xxxxx	xxxx	xxxxx		
Shared LOS:	*	*	*			*	*	*			*	*	*			*	*	*		
ApproachDel:	xxxxxx					125.9					xxxxxx					xxxxxx				
ApproachLOS:	*					F					*					*				

Note: Queue reported is the number of cars per lane.

Church of the Woods
Year 2030 Without Project Traffic Conditions
Saturday Peak Hour

Level Of Service Computation Report
2000 HCM Unsignalized Method (Base Volume Alternative)

Intersection #8 Bear Springs Road/State Route 18

Average Delay (sec/veh): 6.0 Worst Case Level Of Service: F[91.6]

Approach:	North Bound						South Bound						East Bound						West Bound					
Movement:	L	-	T	-	R		L	-	T	-	R		L	-	T	-	R		L	-	T	-	R	
Control:	Stop Sign						Stop Sign						Uncontrolled						Uncontrolled					
Rights:	Include						Include						Include						Include					
Lanes:	0	0	1!	0	0		0	0	1!	0	0		1	0	0	1	0		1	0	0	1	0	
Volume Module:																								
Base Vol:	2	0	7				73	0	53				82	964	2				16	875	44			
Growth Adj:	1.00	1.00	1.00				1.00	1.00	1.00				1.00	1.00	1.00				1.00	1.00	1.00			
Initial Bse:	2	0	7				73	0	53				82	964	2				16	875	44			
User Adj:	1.00	1.00	1.00				1.00	1.00	1.00				1.00	1.00	1.00				1.00	1.00	1.00			
PHF Adj:	0.95	0.95	0.95				0.95	0.95	0.95				0.95	0.95	0.95				0.95	0.95	0.95			
PHF Volume:	2	0	7				77	0	56				86	1015	2				17	921	46			
Reduct Vol:	0	0	0				0	0	0				0	0	0				0	0	0			
FinalVolume:	2	0	7				77	0	56				86	1015	2				17	921	46			
Critical Gap Module:																								
Critical Gp:	7.1	6.5	6.2				7.1	6.5	6.2				4.1	xxxx	xxxxx				4.1	xxxx	xxxxx			
FollowUpTim:	3.5	4.0	3.3				3.5	4.0	3.3				2.2	xxxx	xxxxx				2.2	xxxx	xxxxx			
Capacity Module:																								
Cnflict Vol:	2194	2189	1016				2170	2167	944				967	xxxx	xxxxx				1017	xxxx	xxxxx			
Potent Cap.:	33	46	292				34	48	321				720	xxxx	xxxxx				690	xxxx	xxxxx			
Move Cap.:	24	40	292				30	41	321				720	xxxx	xxxxx				690	xxxx	xxxxx			
Total Cap:	90	123	xxxxx				115	136	xxxxx				xxxx	xxxx	xxxxx				xxxx	xxxx	xxxxx			
Volume/Cap:	0.02	0.00	0.03				0.67	0.00	0.17				0.12	xxxx	xxxx				0.02	xxxx	xxxx			
Level Of Service Module:																								
2Way95thQ:	xxxx	xxxx	xxxxx				xxxx	xxxx	xxxxx				0.4	xxxx	xxxxx				0.1	xxxx	xxxxx			
Control Del:	xxxxx	xxxx	xxxxx				xxxxx	xxxx	xxxxx				10.7	xxxx	xxxxx				10.3	xxxx	xxxxx			
LOS by Move:	*	*	*				*	*	*				B	*	*				B	*	*			
Movement:	LT	-	LTR	-	RT		LT	-	LTR	-	RT		LT	-	LTR	-	RT		LT	-	LTR	-	RT	
Shared Cap.:	xxxx	194	xxxxx				xxxx	158	xxxxx				xxxx	xxxx	xxxxx				xxxx	xxxx	xxxxx			
SharedQueue:	xxxxx	0.2	xxxxx				xxxxx	5.7	xxxxx				xxxxx	xxxx	xxxxx				xxxxx	xxxx	xxxxx			
Shrd ConDel:	xxxxx	24.5	xxxxx				xxxxx	91.6	xxxxx				xxxxx	xxxx	xxxxx				xxxxx	xxxx	xxxxx			
Shared LOS:	*	C	*				*	F	*				*	*	*				*	*	*			
ApproachDel:	24.5						91.6						xxxxxx						xxxxxx					
ApproachLOS:	C						F						*						*					

Note: Queue reported is the number of cars per lane.

Church of the Woods
Year 2030 Without Project Traffic Conditions
Saturday Peak Hour

Level Of Service Computation Report
2000 HCM Unsignalized Method (Base Volume Alternative)

Intersection #10 Daley Canyon Road/State Route 18

Average Delay (sec/veh): 19.5 Worst Case Level Of Service: F[62.3]

Approach:	North Bound					South Bound					East Bound					West Bound				
Movement:	L	-	T	-	R	L	-	T	-	R	L	-	T	-	R	L	-	T	-	R
Control:	Stop Sign					Stop Sign					Uncontrolled					Uncontrolled				
Rights:	Include					Include					Include					Include				
Lanes:	0	0	0	0	0	0	0	0	0	1	1	0	1	0	0	0	0	1	0	0
Volume Module:																				
Base Vol:	0	0	0	0	0	577	564	612	0	0	434	0								
Growth Adj:	1.00	1.00	1.00	1.00	1.00	1.00	1.00	1.00	1.00	1.00	1.00	1.00								
Initial Bse:	0	0	0	0	0	577	564	612	0	0	434	0								
User Adj:	1.00	1.00	1.00	1.00	1.00	1.00	1.00	1.00	1.00	1.00	1.00	1.00								
PHF Adj:	0.95	0.95	0.95	0.95	0.95	0.95	0.95	0.95	0.95	0.95	0.95	0.95								
PHF Volume:	0	0	0	0	0	607	594	644	0	0	457	0								
Reduct Vol:	0	0	0	0	0	0	0	0	0	0	0	0								
FinalVolume:	0	0	0	0	0	607	594	644	0	0	457	0								
Critical Gap Module:																				
Critical Gp:	xxxxx	xxxx	xxxxx	xxxxx	xxxx	6.2	4.1	xxxx	xxxxx	xxxxx	xxxx	xxxxx								
FollowUpTim:	xxxxx	xxxx	xxxxx	xxxxx	xxxx	3.3	2.2	xxxx	xxxxx	xxxxx	xxxx	xxxxx								
Capacity Module:																				
Cnflict Vol:	xxxx	xxxx	xxxxx	xxxx	xxxx	457	457	xxxx	xxxxx	xxxx	xxxx	xxxxx								
Potent Cap.:	xxxx	xxxx	xxxxx	xxxx	xxxx	608	1115	xxxx	xxxxx	xxxx	xxxx	xxxxx								
Move Cap.:	xxxx	xxxx	xxxxx	xxxx	xxxx	608	1115	xxxx	xxxxx	xxxx	xxxx	xxxxx								
Volume/Cap:	xxxx	xxxx	xxxx	xxxx	xxxx	1.00	0.53	xxxx	xxxx	xxxx	xxxx	xxxx								
Level Of Service Module:																				
2Way95thQ:	xxxx	xxxx	xxxxx	xxxx	xxxx	15.1	3.3	xxxx	xxxxx	xxxx	xxxx	xxxxx								
Control Del:	xxxxx	xxxx	xxxxx	xxxxx	xxxx	62.3	11.8	xxxx	xxxxx	xxxxx	xxxx	xxxxx								
LOS by Move:	*	*	*	*	*	F	B	*	*	*	*	*								
Movement:	LT	-	LTR	-	RT	LT	-	LTR	-	RT	LT	-	LTR	-	RT	LT	-	LTR	-	RT
Shared Cap.:	xxxx	xxxx	xxxxx	xxxx	xxxx	xxxxx	xxxx	xxxx	xxxxx	xxxx	xxxx	xxxxx								
SharedQueue:	xxxxx	xxxx	xxxxx	xxxxx	xxxx	xxxxx	xxxxx	xxxx	xxxxx	xxxxx	xxxx	xxxxx								
Shrd ConDel:	xxxxx	xxxx	xxxxx	xxxxx	xxxx	xxxxx	xxxxx	xxxx	xxxxx	xxxxx	xxxx	xxxxx								
Shared LOS:	*	*	*	*	*	*	*	*	*	*	*	*								
ApproachDel:	xxxxxx			62.3			xxxxxx				xxxxxx									
ApproachLOS:	*			F			*				*									

Note: Queue reported is the number of cars per lane.

Church of the Woods
Year 2030 Without Project Traffic Conditions
Saturday Peak Hour

Level Of Service Computation Report
2000 HCM Unsignalized Method (Base Volume Alternative)

Intersection #11 Daley Canyon Road/Daley Canyon Access Road

Average Delay (sec/veh): 5.1 Worst Case Level Of Service: C[20.9]

Approach:	North Bound			South Bound			East Bound			West Bound		
Movement:	L	T	R	L	T	R	L	T	R	L	T	R
Control:	Uncontrolled			Uncontrolled			Stop Sign			Stop Sign		
Rights:	Include			Include			Include			Include		
Lanes:	0 0 1	0	0	0 1	0 0	0	0 0 0	0	0	0 0 0	0	1
Volume Module:												
Base Vol:	0	564	0	280	577	0	0	0	0	0	0	274
Growth Adj:	1.00	1.00	1.00	1.00	1.00	1.00	1.00	1.00	1.00	1.00	1.00	1.00
Initial Bse:	0	564	0	280	577	0	0	0	0	0	0	274
User Adj:	1.00	1.00	1.00	1.00	1.00	1.00	1.00	1.00	1.00	1.00	1.00	1.00
PHF Adj:	0.95	0.95	0.95	0.95	0.95	0.95	0.95	0.95	0.95	0.95	0.95	0.95
PHF Volume:	0	594	0	295	607	0	0	0	0	0	0	288
Reduct Vol:	0	0	0	0	0	0	0	0	0	0	0	0
FinalVolume:	0	594	0	295	607	0	0	0	0	0	0	288
Critical Gap Module:												
Critical Gp:	xxxxx	xxxx	xxxxx	4.1	xxxx	xxxxx	xxxxx	xxxx	xxxxx	xxxxx	xxxx	6.2
FollowUpTim:	xxxxx	xxxx	xxxxx	2.2	xxxx	xxxxx	xxxxx	xxxx	xxxxx	xxxxx	xxxx	3.3
Capacity Module:												
Cnflict Vol:	xxxx	xxxx	xxxxx	594	xxxx	xxxxx	xxxx	xxxx	xxxxx	xxxx	xxxx	594
Potent Cap.:	xxxx	xxxx	xxxxx	992	xxxx	xxxxx	xxxx	xxxx	xxxxx	xxxx	xxxx	509
Move Cap.:	xxxx	xxxx	xxxxx	992	xxxx	xxxxx	xxxx	xxxx	xxxxx	xxxx	xxxx	509
Volume/Cap:	xxxx	xxxx	xxxx	0.30	xxxx	xxxx	xxxx	xxxx	xxxx	xxxx	xxxx	0.57
Level Of Service Module:												
2Way95thQ:	xxxx	xxxx	xxxxx	1.2	xxxx	xxxxx	xxxx	xxxx	xxxxx	xxxx	xxxx	3.5
Control Del:	xxxxx	xxxx	xxxxx	10.2	xxxx	xxxxx	xxxxx	xxxx	xxxxx	xxxxx	xxxx	20.9
LOS by Move:	*	*	*	B	*	*	*	*	*	*	*	C
Movement:	LT	LTR	RT	LT	LTR	RT	LT	LTR	RT	LT	LTR	RT
Shared Cap.:	xxxx	xxxx	xxxxx	xxxx	xxxx	xxxxx	xxxx	xxxx	xxxxx	xxxx	xxxx	xxxxx
SharedQueue:	xxxxx	xxxx	xxxxx	1.2	xxxx	xxxxx	xxxxx	xxxx	xxxxx	xxxxx	xxxx	xxxxx
Shrd ConDel:	xxxxx	xxxx	xxxxx	10.2	xxxx	xxxxx	xxxxx	xxxx	xxxxx	xxxxx	xxxx	xxxxx
Shared LOS:	*	*	*	B	*	*	*	*	*	*	*	*
ApproachDel:	xxxxxx			xxxxxx			xxxxxx			20.9		
ApproachLOS:	*			*			*			C		

Note: Queue reported is the number of cars per lane.

Church of the Woods
Year 2030 Without Project Traffic Conditions
Saturday Peak Hour

Level Of Service Computation Report
2000 HCM Unsignalized Method (Base Volume Alternative)

Intersection #12 Daley Canyon Access Road/State Route 18

Average Delay (sec/veh): 32.0 Worst Case Level Of Service: F[183.1]

Approach:	North Bound					South Bound					East Bound					West Bound				
Movement:	L	-	T	-	R	L	-	T	-	R	L	-	T	-	R	L	-	T	-	R
Control:	Stop Sign					Stop Sign					Uncontrolled					Uncontrolled				
Rights:	Include					Include					Include					Include				
Lanes:	0	0	0	0	0	1	0	0	0	0	0	0	1	0	0	0	0	1	0	1
Volume Module:																				
Base Vol:	0	0	0			280	0	0			0	612	0			0	434	274		
Growth Adj:	1.00	1.00	1.00			1.00	1.00	1.00			1.00	1.00	1.00			1.00	1.00	1.00		
Initial Bse:	0	0	0			280	0	0			0	612	0			0	434	274		
User Adj:	1.00	1.00	1.00			1.00	1.00	1.00			1.00	1.00	1.00			1.00	1.00	1.00		
PHF Adj:	0.95	0.95	0.95			0.95	0.95	0.95			0.95	0.95	0.95			0.95	0.95	0.95		
PHF Volume:	0	0	0			295	0	0			0	644	0			0	457	288		
Reduct Vol:	0	0	0			0	0	0			0	0	0			0	0	0		
FinalVolume:	0	0	0			295	0	0			0	644	0			0	457	288		
Critical Gap Module:																				
Critical Gp:	xxxxx	xxxx	xxxxx			6.4	xxxx	xxxxx			xxxxx	xxxx	xxxxx			xxxxx	xxxx	xxxxx		
FollowUpTim:	xxxxx	xxxx	xxxxx			3.5	xxxx	xxxxx			xxxxx	xxxx	xxxxx			xxxxx	xxxx	xxxxx		
Capacity Module:																				
Cnflict Vol:	xxxx	xxxx	xxxxx			1101	xxxx	xxxxx			xxxx	xxxx	xxxxx			xxxx	xxxx	xxxxx		
Potent Cap.:	xxxx	xxxx	xxxxx			237	xxxx	xxxxx			xxxx	xxxx	xxxxx			xxxx	xxxx	xxxxx		
Move Cap.:	xxxx	xxxx	xxxxx			237	xxxx	xxxxx			xxxx	xxxx	xxxxx			xxxx	xxxx	xxxxx		
Volume/Cap:	xxxx	xxxx	xxxx			1.25	xxxx	xxxx			xxxx	xxxx	xxxx			xxxx	xxxx	xxxx		
Level Of Service Module:																				
2Way95thQ:	xxxx	xxxx	xxxxx			14.8	xxxx	xxxxx			xxxx	xxxx	xxxxx			xxxx	xxxx	xxxxx		
Control Del:	xxxxx	xxxx	xxxxx			183.1	xxxx	xxxxx			xxxxx	xxxx	xxxxx			xxxxx	xxxx	xxxxx		
LOS by Move:	*	*	*			F	*	*			*	*	*			*	*	*		
Movement:	LT	-	LTR	-	RT	LT	-	LTR	-	RT	LT	-	LTR	-	RT	LT	-	LTR	-	RT
Shared Cap.:	xxxx	xxxx	xxxxx			xxxx	xxxx	xxxxx			xxxx	xxxx	xxxxx			xxxx	xxxx	xxxxx		
SharedQueue:	xxxxx	xxxx	xxxxx			xxxxx	xxxx	xxxxx			xxxxx	xxxx	xxxxx			xxxxx	xxxx	xxxxx		
Shrd ConDel:	xxxxx	xxxx	xxxxx			xxxxx	xxxx	xxxxx			xxxxx	xxxx	xxxxx			xxxxx	xxxx	xxxxx		
Shared LOS:	*	*	*			*	*	*			*	*	*			*	*	*		
ApproachDel:	xxxxxx					183.1					xxxxxx					xxxxxx				
ApproachLOS:	*					F					*					*				

Note: Queue reported is the number of cars per lane.

Church of the Woods
Year 2030 Without Project Traffic Conditions
Saturday Peak Hour

Level Of Service Computation Report
2000 HCM Unsignalized Method (Base Volume Alternative)

Intersection #13 State Route 173/State Route 18

Average Delay (sec/veh): 193.4 Worst Case Level Of Service: F[816.8]

Approach:	North Bound						South Bound						East Bound						West Bound					
Movement:	L	-	T	-	R		L	-	T	-	R		L	-	T	-	R		L	-	T	-	R	
Control:	Stop Sign						Stop Sign						Uncontrolled						Uncontrolled					
Rights:	Include						Include						Include						Include					
Lanes:	0	0	0	0	0		0	0	1!	0	0		1	0	1	0	0		0	0	1	0	1	
Volume Module:																								
Base Vol:	0	0	0				150	0			253		437		393		0		0		335		159	
Growth Adj:	1.00	1.00	1.00				1.00	1.00			1.00		1.00		1.00		1.00		1.00		1.00		1.00	
Initial Bse:	0	0	0				150	0			253		437		393		0		0		335		159	
User Adj:	1.00	1.00	1.00				1.00	1.00			1.00		1.00		1.00		1.00		1.00		1.00		1.00	
PHF Adj:	0.95	0.95	0.95				0.95	0.95			0.95		0.95		0.95		0.95		0.95		0.95		0.95	
PHF Volume:	0	0	0				158	0			266		460		414		0		0		353		167	
Reduct Vol:	0	0	0				0	0			0		0		0		0		0		0		0	
FinalVolume:	0	0	0				158	0			266		460		414		0		0		353		167	
Critical Gap Module:																								
Critical Gp:	xxxxx	xxxx	xxxxx				6.4		6.5		6.2		4.1	xxxx	xxxxx	xxxxx	xxxx	xxxxx						
FollowUpTim:	xxxxx	xxxx	xxxxx				3.5		4.0		3.3		2.2	xxxx	xxxxx	xxxxx	xxxx	xxxxx						
Capacity Module:																								
Cnflict Vol:	xxxx	xxxx	xxxxx				1686		1686		353		520	xxxx	xxxxx		xxxx	xxxxx	xxxx	xxxx	xxxxx			
Potent Cap.:	xxxx	xxxx	xxxxx				104		95		696		1056	xxxx	xxxxx		xxxx	xxxxx	xxxx	xxxx	xxxxx			
Move Cap.:	xxxx	xxxx	xxxxx				69		54		696		1056	xxxx	xxxxx		xxxx	xxxxx	xxxx	xxxx	xxxxx			
Volume/Cap:	xxxx	xxxx	xxxx				2.29		0.00		0.38		0.44	xxxx	xxxx		xxxx	xxxx	xxxx					
Level Of Service Module:																								
2Way95thQ:	xxxx	xxxx	xxxxx				xxxx	xxxx	xxxxx				2.2	xxxx	xxxxx		xxxx	xxxxx	xxxx	xxxx	xxxxx			
Control Del:	xxxxx	xxxx	xxxxx				xxxxx	xxxx	xxxxx				11.0	xxxx	xxxxx		xxxxx	xxxx	xxxxx					
LOS by Move:	*	*	*				*	*	*				B	*	*		*	*	*					
Movement:	LT	-	LTR	-	RT		LT	-	LTR	-	RT		LT	-	LTR	-	RT		LT	-	LTR	-	RT	
Shared Cap.:	xxxx	xxxx	xxxxx				xxxx		158		xxxxx		xxxx	xxxx	xxxxx		xxxx	xxxxx	xxxx	xxxx	xxxxx			
SharedQueue:	xxxxx	xxxx	xxxxx				xxxxx		37.5		xxxxx		xxxxx	xxxx	xxxxx		xxxxx	xxxxx	xxxx	xxxx	xxxxx			
Shrd ConDel:	xxxxx	xxxx	xxxxx				xxxxx		817		xxxxx		xxxxx	xxxx	xxxxx		xxxxx	xxxxx	xxxx	xxxx	xxxxx			
Shared LOS:	*	*	*				*		F		*		*	*	*		*	*	*					
ApproachDel:	xxxxxx						816.8						xxxxxx						xxxxxx					
ApproachLOS:	*						F						*						*					

Note: Queue reported is the number of cars per lane.

Church of the Woods
Year 2030 Without Project Traffic Conditions
Sunday Peak Hour

Level Of Service Computation Report
2000 HCM Unsignalized Method (Base Volume Alternative)

Intersection #1 North Road/State Route 189

Average Delay (sec/veh): 6.0 Worst Case Level Of Service: C[16.2]

Approach:	North Bound					South Bound					East Bound					West Bound				
Movement:	L	-	T	-	R	L	-	T	-	R	L	-	T	-	R	L	-	T	-	R
Control:	Stop Sign					Stop Sign					Uncontrolled					Uncontrolled				
Rights:	Include					Include					Include					Include				
Lanes:	0	0	0	0	0	0	0	1!	0	0	0	1	0	0	0	0	0	0	1	0
Volume Module:																				
Base Vol:	0	0	0	154	0	88	62	105	0	0	195	133								
Growth Adj:	1.00	1.00	1.00	1.00	1.00	1.00	1.00	1.00	1.00	1.00	1.00	1.00								
Initial Bse:	0	0	0	154	0	88	62	105	0	0	195	133								
User Adj:	1.00	1.00	1.00	1.00	1.00	1.00	1.00	1.00	1.00	1.00	1.00	1.00								
PHF Adj:	0.95	0.95	0.95	0.95	0.95	0.95	0.95	0.95	0.95	0.95	0.95	0.95								
PHF Volume:	0	0	0	162	0	93	65	111	0	0	205	140								
Reduct Vol:	0	0	0	0	0	0	0	0	0	0	0	0								
FinalVolume:	0	0	0	162	0	93	65	111	0	0	205	140								
Critical Gap Module:																				
Critical Gp:	xxxxx	xxxx	xxxxx	6.4	6.5	6.2	4.1	xxxx	xxxxx	xxxxx	xxxx	xxxxx								
FollowUpTim:	xxxxx	xxxx	xxxxx	3.5	4.0	3.3	2.2	xxxx	xxxxx	xxxxx	xxxx	xxxxx								
Capacity Module:																				
Cnflict Vol:	xxxx	xxxx	xxxxx	516	516	275	345	xxxx	xxxxx	xxxx	xxxx	xxxxx								
Potent Cap.:	xxxx	xxxx	xxxxx	522	466	768	1225	xxxx	xxxxx	xxxx	xxxx	xxxxx								
Move Cap.:	xxxx	xxxx	xxxxx	500	440	768	1225	xxxx	xxxxx	xxxx	xxxx	xxxxx								
Volume/Cap:	xxxx	xxxx	xxxx	0.32	0.00	0.12	0.05	xxxx	xxxx	xxxx	xxxx	xxxx								
Level Of Service Module:																				
2Way95thQ:	xxxx	xxxx	xxxxx	xxxx	xxxx	xxxxx	0.2	xxxx	xxxxx	xxxx	xxxx	xxxxx								
Control Del:	xxxxx	xxxx	xxxxx	xxxxx	xxxx	xxxxx	8.1	xxxx	xxxxx	xxxxx	xxxx	xxxxx								
LOS by Move:	*	*	*	*	*	*	A	*	*	*	*	*								
Movement:	LT	-	LTR	-	RT	LT	-	LTR	-	RT	LT	-	LTR	-	RT	LT	-	LTR	-	RT
Shared Cap.:	xxxx	xxxx	xxxxx	xxxx	573	xxxxx	xxxx	xxxx	xxxxx	xxxx	xxxx	xxxxx								
SharedQueue:	xxxxx	xxxx	xxxxx	xxxxx	2.3	xxxxx	0.2	xxxx	xxxxx	xxxxx	xxxx	xxxxx								
Shrd ConDel:	xxxxx	xxxx	xxxxx	xxxxx	16.2	xxxxx	8.1	xxxx	xxxxx	xxxxx	xxxx	xxxxx								
Shared LOS:	*	*	*	*	C	*	A	*	*	*	*	*								
ApproachDel:	xxxxxx			16.2			xxxxxx			xxxxxx										
ApproachLOS:	*			C			*			*										

Note: Queue reported is the number of cars per lane.

Church of the Woods
Year 2030 Without Project Traffic Conditions
Sunday Peak Hour

Level Of Service Computation Report
2000 HCM Unsignalized Method (Base Volume Alternative)

Intersection #2 Bear Springs Road/State Route 189

Average Delay (sec/veh): 6.1 Worst Case Level Of Service: C[17.7]

Approach:	North Bound						South Bound						East Bound						West Bound					
Movement:	L	-	T	-	R		L	-	T	-	R		L	-	T	-	R		L	-	T	-	R	
Control:	Stop Sign						Stop Sign						Uncontrolled						Uncontrolled					
Rights:	Include						Include						Include						Include					
Lanes:	0	0	1!	0	0		0	0	1!	0	0		0	0	1!	0	0		0	0	1!	0	0	
Volume Module:																								
Base Vol:	19	30		15			58	23		99			71	189		34			19	237		32		
Growth Adj:	1.00	1.00		1.00			1.00	1.00		1.00			1.00	1.00		1.00			1.00	1.00		1.00		
Initial Bse:	19	30		15			58	23		99			71	189		34			19	237		32		
User Adj:	1.00	1.00		1.00			1.00	1.00		1.00			1.00	1.00		1.00			1.00	1.00		1.00		
PHF Adj:	0.95	0.95		0.95			0.95	0.95		0.95			0.95	0.95		0.95			0.95	0.95		0.95		
PHF Volume:	20	32		16			61	24		104			75	199		36			20	249		34		
Reduct Vol:	0	0		0			0	0		0			0	0		0			0	0		0		
FinalVolume:	20	32		16			61	24		104			75	199		36			20	249		34		
Critical Gap Module:																								
Critical Gp:	7.1	6.5		6.2			7.1	6.5		6.2			4.1	xxxx		xxxxx			4.1	xxxx		xxxxx		
FollowUpTim:	3.5	4.0		3.3			3.5	4.0		3.3			2.2	xxxx		xxxxx			2.2	xxxx		xxxxx		
Capacity Module:																								
Cnflict Vol:	737	689		217			696	691		266			283	xxxx		xxxxx			235	xxxx		xxxxx		
Potent Cap.:	337	371		828			359	370		777			1291	xxxx		xxxxx			1344	xxxx		xxxxx		
Move Cap.:	260	343		828			309	343		777			1291	xxxx		xxxxx			1344	xxxx		xxxxx		
Volume/Cap:	0.08	0.09		0.02			0.20	0.07		0.13			0.06	xxxx		xxxx			0.01	xxxx		xxxx		
Level Of Service Module:																								
2Way95thQ:	xxxx	xxxx		xxxxx			xxxx	xxxx		xxxxx			0.2	xxxx		xxxxx			0.0	xxxx		xxxxx		
Control Del:	xxxxx	xxxx		xxxxx			xxxxx	xxxx		xxxxx			8.0	xxxx		xxxxx			7.7	xxxx		xxxxx		
LOS by Move:	*	*		*			*	*		*			A	*		*			A	*		*		
Movement:	LT	-	LTR	-	RT		LT	-	LTR	-	RT		LT	-	LTR	-	RT		LT	-	LTR	-	RT	
Shared Cap.:	xxxx		359	xxxxx			xxxx		471	xxxxx			xxxx	xxxx		xxxxx			xxxx	xxxx		xxxxx		
SharedQueue:	xxxxx		0.7	xxxxx			xxxxx		1.9	xxxxx			xxxxx	xxxx		xxxxx			xxxxx	xxxx		xxxxx		
Shrd ConDel:	xxxxx		17.3	xxxxx			xxxxx		17.7	xxxxx			xxxxx	xxxx		xxxxx			xxxxx	xxxx		xxxxx		
Shared LOS:	*		C	*			*		C	*			*	*		*			*	*		*		
ApproachDel:	17.3						17.7						xxxxxx						xxxxxx					
ApproachLOS:	C						C						*						*					

Note: Queue reported is the number of cars per lane.

Church of the Woods
Year 2030 Without Project Traffic Conditions
Sunday Peak Hour

Level Of Service Computation Report
2000 HCM Unsignalized Method (Base Volume Alternative)

Intersection #3 Grass Valley Road/State Route 189

Average Delay (sec/veh): 116.1 Worst Case Level Of Service: F[200.8]

Approach:	North Bound					South Bound					East Bound					West Bound				
Movement:	L	-	T	-	R	L	-	T	-	R	L	-	T	-	R	L	-	T	-	R
Control:	Stop Sign					Stop Sign					Uncontrolled					Uncontrolled				
Rights:	Include					Include					Include					Include				
Lanes:	0	0	0	0	0	0	0	1!	0	0	1	0	1	0	0	0	0	0	1	0
Volume Module:																				
Base Vol:	0	0	0			486	0				283	115	204	0		0	69			181
Growth Adj:	1.00	1.00	1.00			1.00	1.00				1.00	1.00	1.00	1.00		1.00	1.00			1.00
Initial Bse:	0	0	0			486	0				283	115	204	0		0	69			181
User Adj:	1.00	1.00	1.00			1.00	1.00				1.00	1.00	1.00	1.00		1.00	1.00			1.00
PHF Adj:	0.95	0.95	0.95			0.95	0.95				0.95	0.95	0.95	0.95		0.95	0.95			0.95
PHF Volume:	0	0	0			512	0				298	121	215	0		0	73			191
Reduct Vol:	0	0	0			0	0				0	0	0	0		0	0			0
FinalVolume:	0	0	0			512	0				298	121	215	0		0	73			191
Critical Gap Module:																				
Critical Gp:	xxxxx	xxxx	xxxxx			6.4	6.5				6.2	4.1	xxxx	xxxxx		xxxxx	xxxx			xxxxx
FollowUpTim:	xxxxx	xxxx	xxxxx			3.5	4.0				3.3	2.2	xxxx	xxxxx		xxxxx	xxxx			xxxxx
Capacity Module:																				
Cnflict Vol:	xxxx	xxxx	xxxxx			625	625				168	263	xxxx	xxxxx		xxxx	xxxx			xxxxx
Potent Cap.:	xxxx	xxxx	xxxxx			452	404				881	1313	xxxx	xxxxx		xxxx	xxxx			xxxxx
Move Cap.:	xxxx	xxxx	xxxxx			420	367				881	1313	xxxx	xxxxx		xxxx	xxxx			xxxxx
Total Cap:	272	395	xxxxx			492	435				xxxxx	xxxx	xxxx	xxxxx		xxxx	xxxx			xxxxx
Volume/Cap:	xxxx	xxxx	xxxx			1.04	0.00				0.34	0.09	xxxx	xxxx		xxxx	xxxx			xxxx
Level Of Service Module:																				
2Way95thQ:	xxxx	xxxx	xxxxx			xxxx	xxxx				xxxxx	0.3	xxxx	xxxxx		xxxx	xxxx			xxxxx
Control Del:	xxxxx	xxxx	xxxxx			xxxxx	xxxx				xxxxx	8.0	xxxx	xxxxx		xxxxx	xxxx			xxxxx
LOS by Move:	*	*	*			*	*				*	A	*	*		*	*			*
Movement:	LT	-	LTR	-	RT	LT	-	LTR	-	RT	LT	-	LTR	-	RT	LT	-	LTR	-	RT
Shared Cap.:	xxxx	xxxx	xxxxx			xxxx	588				xxxxx	xxxx	xxxx	xxxxx		xxxx	xxxx			xxxxx
SharedQueue:	xxxxx	xxxx	xxxxx			xxxxx	36.1				xxxxx	xxxxx	xxxx	xxxxx		xxxxx	xxxx			xxxxx
Shrd ConDel:	xxxxx	xxxx	xxxxx			xxxxx	201				xxxxx	xxxxx	xxxx	xxxxx		xxxxx	xxxx			xxxxx
Shared LOS:	*	*	*			*	F				*	*	*	*		*	*			*
ApproachDel:	xxxxxx					200.8					xxxxxx					xxxxxx				
ApproachLOS:	*					F					*					*				

Note: Queue reported is the number of cars per lane.

Church of the Woods
Year 2030 Without Project Traffic Conditions
Sunday Peak Hour

Level Of Service Computation Report
2000 HCM 4-Way Stop Method (Base Volume Alternative)

Intersection #4 Daley Canyon Road/State Route 189

Cycle (sec):	100	Critical Vol./Cap.(X):	1.215
Loss Time (sec):	0 (Y+R=4.0 sec)	Average Delay (sec/veh):	89.2
Optimal Cycle:	0	Level Of Service:	F

Approach:	North Bound				South Bound				East Bound				West Bound			
Movement:	L	- T	- R		L	- T	- R		L	- T	- R		L	- T	- R	
Control:	Stop Sign				Stop Sign				Stop Sign				Stop Sign			
Rights:	Include				Include				Include				Include			
Min. Green:	10	10	10	10	10	10	10	10	10	10	10	10	10	10	10	10
Lanes:	0	1 0	0	0	0	0	0	1 0	0	0	1! 0	0	0	0	0	0
Volume Module:																
Base Vol:	184	272	0	0	465	51	240	0	412	0	0	0				
Growth Adj:	1.00	1.00	1.00	1.00	1.00	1.00	1.00	1.00	1.00	1.00	1.00	1.00				
Initial Bse:	184	272	0	0	465	51	240	0	412	0	0	0				
User Adj:	1.00	1.00	1.00	1.00	1.00	1.00	1.00	1.00	1.00	1.00	1.00	1.00				
PHF Adj:	0.95	0.95	0.95	0.95	0.95	0.95	0.95	0.95	0.95	0.95	0.95	0.95				
PHF Volume:	194	286	0	0	489	54	253	0	434	0	0	0				
Reduct Vol:	0	0	0	0	0	0	0	0	0	0	0	0				
Reduced Vol:	194	286	0	0	489	54	253	0	434	0	0	0				
PCE Adj:	1.00	1.00	1.00	1.00	1.00	1.00	1.00	1.00	1.00	1.00	1.00	1.00				
MLF Adj:	1.00	1.00	1.00	1.00	1.00	1.00	1.00	1.00	1.00	1.00	1.00	1.00				
FinalVolume:	194	286	0	0	489	54	253	0	434	0	0	0				
Saturation Flow Module:																
Adjustment:	1.00	1.00	1.00	1.00	1.00	1.00	1.00	1.00	1.00	1.00	1.00	1.00				
Lanes:	0.40	0.60	0.00	0.00	0.90	0.10	0.37	0.00	0.63	0.00	0.00	0.00				
Final Sat.:	210	310	0	0	484	53	208	0	357	0	0	0				
Capacity Analysis Module:																
Vol/Sat:	0.92	0.92	xxxx	xxxx	1.01	1.01	1.22	xxxx	1.22	xxxx	xxxx	xxxx				
Crit Moves:		****			****				****							
Delay/Veh:	49.2	49.2	0.0	0.0	67.7	67.7	134.2	0.0	134.2	0.0	0.0	0.0				
Delay Adj:	1.00	1.00	1.00	1.00	1.00	1.00	1.00	1.00	1.00	1.00	1.00	1.00				
AdjDel/Veh:	49.2	49.2	0.0	0.0	67.7	67.7	134.2	0.0	134.2	0.0	0.0	0.0				
LOS by Move:	E	E	*	*	F	F	F	*	F	*	*	*				
ApproachDel:		49.2			67.7			134.2			xxxxxx					
Delay Adj:		1.00			1.00			1.00			xxxxx					
ApprAdjDel:		49.2			67.7			134.2			xxxxxx					
LOS by Appr:		E			F			F			*					
AllWayAvgQ:	5.7	5.7	5.7	8.6	8.6	8.6	19.6	19.6	19.6	0.0	0.0	0.0				

Note: Queue reported is the number of cars per lane.

Church of the Woods
Year 2030 Without Project Traffic Conditions
Sunday Peak Hour

Level Of Service Computation Report
2000 HCM 4-Way Stop Method (Base Volume Alternative)

Intersection #5 North Bay Road/State Route 189

Cycle (sec):	100	Critical Vol./Cap.(X):	0.760
Loss Time (sec):	0 (Y+R=4.0 sec)	Average Delay (sec/veh):	21.6
Optimal Cycle:	0	Level Of Service:	C

Approach:	North Bound			South Bound			East Bound			West Bound		
Movement:	L -	T -	R	L -	T -	R	L -	T -	R	L -	T -	R
Control:	Stop Sign			Stop Sign			Stop Sign			Stop Sign		
Rights:	Include			Include			Include			Include		
Min. Green:	10	10	10	10	10	10	10	10	10	10	10	10
Lanes:	0 0	0 0	0	1 0	0 0	1	1 0	1 0	0	0 0	0 1	0
Volume Module:												
Base Vol:	0	0	0	126	0	410	293	253	0	0	246	138
Growth Adj:	1.00	1.00	1.00	1.00	1.00	1.00	1.00	1.00	1.00	1.00	1.00	1.00
Initial Bse:	0	0	0	126	0	410	293	253	0	0	246	138
User Adj:	1.00	1.00	1.00	1.00	1.00	1.00	1.00	1.00	1.00	1.00	1.00	1.00
PHF Adj:	0.95	0.95	0.95	0.95	0.95	0.95	0.95	0.95	0.95	0.95	0.95	0.95
PHF Volume:	0	0	0	133	0	432	308	266	0	0	259	145
Reduct Vol:	0	0	0	0	0	0	0	0	0	0	0	0
Reduced Vol:	0	0	0	133	0	432	308	266	0	0	259	145
PCE Adj:	1.00	1.00	1.00	1.00	1.00	1.00	1.00	1.00	1.00	1.00	1.00	1.00
MLF Adj:	1.00	1.00	1.00	1.00	1.00	1.00	1.00	1.00	1.00	1.00	1.00	1.00
FinalVolume:	0	0	0	133	0	432	308	266	0	0	259	145
Saturation Flow Module:												
Adjustment:	1.00	1.00	1.00	1.00	1.00	1.00	1.00	1.00	1.00	1.00	1.00	1.00
Lanes:	0.00	0.00	0.00	1.00	0.00	1.00	1.00	1.00	0.00	0.00	0.64	0.36
Final Sat.:	0	0	0	477	0	568	486	521	0	0	353	198
Capacity Analysis Module:												
Vol/Sat:	xxxx	xxxx	xxxx	0.28	xxxx	0.76	0.63	0.51	xxxx	xxxx	0.73	0.73
Crit Moves:						****	****				****	
Delay/Veh:	0.0	0.0	0.0	12.9	0.0	25.2	21.4	16.2	0.0	0.0	24.5	24.5
Delay Adj:	1.00	1.00	1.00	1.00	1.00	1.00	1.00	1.00	1.00	1.00	1.00	1.00
AdjDel/Veh:	0.0	0.0	0.0	12.9	0.0	25.2	21.4	16.2	0.0	0.0	24.5	24.5
LOS by Move:	*	*	*	B	*	D	C	C	*	*	C	C
ApproachDel:	xxxxxx			22.3			19.0			24.5		
Delay Adj:	xxxxx			1.00			1.00			1.00		
ApprAdjDel:	xxxxxx			22.3			19.0			24.5		
LOS by Appr:	*			C			C			C		
AllWayAvgQ:	0.0	0.0	0.0	0.4	0.0	2.6	1.5	1.0	0.0	2.3	2.3	2.3

Note: Queue reported is the number of cars per lane.

Church of the Woods
Year 2030 Without Project Traffic Conditions
Sunday Peak Hour

Level Of Service Computation Report
2000 HCM Unsignalized Method (Base Volume Alternative)

Intersection #6 Lake Gregory Road/State Route 189

Average Delay (sec/veh): 8.4 Worst Case Level Of Service: C[19.5]

Approach:	North Bound					South Bound					East Bound					West Bound				
Movement:	L	-	T	-	R	L	-	T	-	R	L	-	T	-	R	L	-	T	-	R
Control:	Uncontrolled					Uncontrolled					Stop Sign					Stop Sign				
Rights:	Include					Include					Include					Include				
Lanes:	0	0	0	1	0	0	1	0	0	0	0	0	0	0	0	0	0	1!	0	0
Volume Module:																				
Base Vol:	0	153		51		84	181		0		0		0		0	198		0		96
Growth Adj:	1.00	1.00		1.00		1.00	1.00		1.00		1.00		1.00		1.00	1.00		1.00		1.00
Initial Bse:	0	153		51		84	181		0		0		0		0	198		0		96
User Adj:	1.00	1.00		1.00		1.00	1.00		1.00		1.00		1.00		1.00	1.00		1.00		1.00
PHF Adj:	0.95	0.95		0.95		0.95	0.95		0.95		0.95		0.95		0.95	0.95		0.95		0.95
PHF Volume:	0	161		54		88	191		0		0		0		0	208		0		101
Reduct Vol:	0	0		0		0	0		0		0		0		0	0		0		0
FinalVolume:	0	161		54		88	191		0		0		0		0	208		0		101
Critical Gap Module:																				
Critical Gp:	xxxxx	xxxx		xxxxx		4.1	xxxx		xxxxx		xxxxx		xxxx		xxxxx	6.4		6.5		6.2
FollowUpTim:	xxxxx	xxxx		xxxxx		2.2	xxxx		xxxxx		xxxxx		xxxx		xxxxx	3.5		4.0		3.3
Capacity Module:																				
Cnflict Vol:	xxxx	xxxx		xxxxx		215	xxxx		xxxxx		xxxx		xxxx		xxxxx	555		555		188
Potent Cap.:	xxxx	xxxx		xxxxx		1367	xxxx		xxxxx		xxxx		xxxx		xxxxx	496		443		859
Move Cap.:	xxxx	xxxx		xxxxx		1367	xxxx		xxxxx		xxxx		xxxx		xxxxx	470		413		859
Volume/Cap:	xxxx	xxxx		xxxx		0.06	xxxx		xxxx		xxxx		xxxx		xxxx	0.44		0.00		0.12
Level Of Service Module:																				
2Way95thQ:	xxxx	xxxx		xxxxx		0.2	xxxx		xxxxx		xxxx		xxxx		xxxxx	xxxx		xxxx		xxxxx
Control Del:	xxxxx	xxxx		xxxxx		7.8	xxxx		xxxxx		xxxxx		xxxx		xxxxx	xxxxx		xxxx		xxxxx
LOS by Move:	*	*		*		A	*		*		*		*		*	*		*		*
Movement:	LT	-	LTR	-	RT	LT	-	LTR	-	RT	LT	-	LTR	-	RT	LT	-	LTR	-	RT
Shared Cap.:	xxxx	xxxx		xxxxx		xxxx	xxxx		xxxxx		xxxx		xxxx		xxxxx	xxxx		552		xxxxx
SharedQueue:	xxxxx	xxxx		xxxxx		0.2	xxxx		xxxxx		xxxxx		xxxx		xxxxx	xxxxx		3.4		xxxxx
Shrd ConDel:	xxxxx	xxxx		xxxxx		7.8	xxxx		xxxxx		xxxxx		xxxx		xxxxx	xxxxx		19.5		xxxxx
Shared LOS:	*	*		*		A	*		*		*		*		*	*		C		*
ApproachDel:	xxxxxx					xxxxxx					xxxxxx					19.5				
ApproachLOS:	*					*					*					C				

Note: Queue reported is the number of cars per lane.

Church of the Woods
Year 2030 Without Project Traffic Conditions
Sunday Peak Hour

Level Of Service Computation Report
2000 HCM Unsignalized Method (Base Volume Alternative)

Intersection #7 Lake Gregory Drive/State Route 18

Average Delay (sec/veh): 5.4 Worst Case Level Of Service: C[19.8]

Approach:	North Bound					South Bound					East Bound					West Bound				
Movement:	L	-	T	-	R	L	-	T	-	R	L	-	T	-	R	L	-	T	-	R
Control:	Stop Sign					Stop Sign					Uncontrolled					Uncontrolled				
Rights:	Include					Include					Include					Include				
Lanes:	0	0	0	0	0	1	0	0	0	1	1	0	1	0	0	0	0	1	0	1
Volume Module:																				
Base Vol:	0	0	0			179	0			199	71		329	0		0		619		133
Growth Adj:	1.00	1.00	1.00			1.00	1.00			1.00	1.00		1.00	1.00		1.00		1.00		1.00
Initial Bse:	0	0	0			179	0			199	71		329	0		0		619		133
User Adj:	1.00	1.00	1.00			1.00	1.00			1.00	1.00		1.00	1.00		1.00		1.00		1.00
PHF Adj:	0.95	0.95	0.95			0.95	0.95			0.95	0.95		0.95	0.95		0.95		0.95		0.95
PHF Volume:	0	0	0			188	0			209	75		346	0		0		652		140
Reduct Vol:	0	0	0			0	0			0	0		0	0		0		0		0
FinalVolume:	0	0	0			188	0			209	75		346	0		0		652		140
Critical Gap Module:																				
Critical Gp:	xxxxx	xxxx	xxxxx			6.4	xxxx			6.2	4.1	xxxx	xxxxx	xxxxx		xxxx		xxxxx		
FollowUpTim:	xxxxx	xxxx	xxxxx			3.5	xxxx			3.3	2.2	xxxx	xxxxx	xxxxx		xxxx		xxxxx		
Capacity Module:																				
Cnflict Vol:	xxxx	xxxx	xxxxx			1147	xxxx			652	792	xxxx	xxxxx	xxxx		xxxx		xxxxx		
Potent Cap.:	xxxx	xxxx	xxxxx			222	xxxx			472	838	xxxx	xxxxx	xxxx		xxxx		xxxxx		
Move Cap.:	xxxx	xxxx	xxxxx			207	xxxx			472	838	xxxx	xxxxx	xxxx		xxxx		xxxxx		
Total Cap:	123	287	xxxxx			407	363	xxxxx		xxxx	xxxx	xxxxx	xxxx	xxxx		xxxx		xxxxx		
Volume/Cap:	xxxx	xxxx	xxxx			0.46	xxxx			0.44	0.09	xxxx	xxxx	xxxx		xxxx		xxxx		
Level Of Service Module:																				
2Way95thQ:	xxxx	xxxx	xxxxx			2.4	xxxx			2.2	0.3	xxxx	xxxxx	xxxx		xxxx		xxxxx		
Control Del:	xxxxx	xxxx	xxxxx			21.2	xxxx			18.6	9.7	xxxx	xxxxx	xxxxx		xxxx		xxxxx		
LOS by Move:	*	*	*			C	*			C	A	*	*	*		*		*		
Movement:	LT	-	LTR	-	RT	LT	-	LTR	-	RT	LT	-	LTR	-	RT	LT	-	LTR	-	RT
Shared Cap.:	xxxx	xxxx	xxxxx			xxxx	xxxx	xxxxx			xxxx	xxxx	xxxxx			xxxx	xxxx	xxxxx		
SharedQueue:	xxxxx	xxxx	xxxxx			xxxxx	xxxx	xxxxx			xxxxx	xxxx	xxxxx			xxxxx	xxxx	xxxxx		
Shrd ConDel:	xxxxx	xxxx	xxxxx			xxxxx	xxxx	xxxxx			xxxxx	xxxx	xxxxx			xxxxx	xxxx	xxxxx		
Shared LOS:	*	*	*			*	*	*			*	*	*			*	*	*		
ApproachDel:	xxxxxx					19.8					xxxxxx					xxxxxx				
ApproachLOS:	*					C					*					*				

Note: Queue reported is the number of cars per lane.

Church of the Woods
Year 2030 Without Project Traffic Conditions
Sunday Peak Hour

Level Of Service Computation Report
2000 HCM Unsignalized Method (Base Volume Alternative)

Intersection #8 Bear Springs Road/State Route 18

Average Delay (sec/veh): 1.9 Worst Case Level Of Service: C[21.9]

Approach:	North Bound			South Bound			East Bound			West Bound		
Movement:	L - T - R			L - T - R			L - T - R			L - T - R		
Control:	Stop Sign			Stop Sign			Uncontrolled			Uncontrolled		
Rights:	Include			Include			Include			Include		
Lanes:	0 0 1! 0 0			0 0 1! 0 0			1 0 0 1 0			1 0 0 1 0		
Volume Module:												
Base Vol:	27	0	27	23	7	34	29	643	23	18	688	25
Growth Adj:	1.00	1.00	1.00	1.00	1.00	1.00	1.00	1.00	1.00	1.00	1.00	1.00
Initial Bse:	27	0	27	23	7	34	29	643	23	18	688	25
User Adj:	1.00	1.00	1.00	1.00	1.00	1.00	1.00	1.00	1.00	1.00	1.00	1.00
PHF Adj:	0.95	0.95	0.95	0.95	0.95	0.95	0.95	0.95	0.95	0.95	0.95	0.95
PHF Volume:	28	0	28	24	7	36	31	677	24	19	724	26
Reduct Vol:	0	0	0	0	0	0	0	0	0	0	0	0
FinalVolume:	28	0	28	24	7	36	31	677	24	19	724	26
Critical Gap Module:												
Critical Gp:	7.1	6.5	6.2	7.1	6.5	6.2	4.1	xxxx	xxxxx	4.1	xxxx	xxxxx
FollowUpTim:	3.5	4.0	3.3	3.5	4.0	3.3	2.2	xxxx	xxxxx	2.2	xxxx	xxxxx
Capacity Module:												
Cnflict Vol:	1547	1538	689	1539	1537	737	751	xxxx	xxxxx	701	xxxx	xxxxx
Potent Cap.:	94	117	449	95	117	422	868	xxxx	xxxxx	905	xxxx	xxxxx
Move Cap.:	78	110	449	85	110	422	868	xxxx	xxxxx	905	xxxx	xxxxx
Total Cap:	192	226	xxxxx	204	229	xxxxx	xxxx	xxxx	xxxxx	xxxx	xxxx	xxxxx
Volume/Cap:	0.15	0.00	0.06	0.12	0.03	0.08	0.04	xxxx	xxxx	0.02	xxxx	xxxx
Level Of Service Module:												
2Way95thQ:	xxxx	xxxx	xxxxx	xxxx	xxxx	xxxxx	0.1	xxxx	xxxxx	0.1	xxxx	xxxxx
Control Del:	xxxxx	xxxx	xxxxx	xxxxx	xxxx	xxxxx	9.3	xxxx	xxxxx	9.1	xxxx	xxxxx
LOS by Move:	*	*	*	*	*	*	A	*	*	A	*	*
Movement:	LT - LTR - RT			LT - LTR - RT			LT - LTR - RT			LT - LTR - RT		
Shared Cap.:	xxxx	269	xxxxx	xxxx	286	xxxxx	xxxx	xxxx	xxxxx	xxxx	xxxx	xxxxx
SharedQueue:	xxxxx	0.8	xxxxx	xxxxx	0.9	xxxxx	xxxxx	xxxx	xxxxx	xxxxx	xxxx	xxxxx
Shrd ConDel:	xxxxx	21.9	xxxxx	xxxxx	21.4	xxxxx	xxxxx	xxxx	xxxxx	xxxxx	xxxx	xxxxx
Shared LOS:	*	C	*	*	C	*	*	*	*	*	*	*
ApproachDel:	21.9			21.4			xxxxxx			xxxxxx		
ApproachLOS:	C			C			*			*		

Note: Queue reported is the number of cars per lane.

Church of the Woods
Year 2030 Without Project Traffic Conditions
Sunday Peak Hour

Level Of Service Computation Report
2000 HCM Unsignalized Method (Base Volume Alternative)

Intersection #10 Daley Canyon Road/State Route 18

Average Delay (sec/veh): 18.1 Worst Case Level Of Service: E[46.0]

Approach:	North Bound					South Bound					East Bound					West Bound				
Movement:	L	-	T	-	R	L	-	T	-	R	L	-	T	-	R	L	-	T	-	R
Control:	Stop Sign					Stop Sign					Uncontrolled					Uncontrolled				
Rights:	Include					Include					Include					Include				
Lanes:	0	0	0	0	0	0	0	0	0	1	1	0	1	0	0	0	0	1	0	0
Volume Module:																				
Base Vol:	0	0	0	0	0	577	327	345	0	0	384	0								
Growth Adj:	1.00	1.00	1.00	1.00	1.00	1.00	1.00	1.00	1.00	1.00	1.00	1.00								
Initial Bse:	0	0	0	0	0	577	327	345	0	0	384	0								
User Adj:	1.00	1.00	1.00	1.00	1.00	1.00	1.00	1.00	1.00	1.00	1.00	1.00								
PHF Adj:	0.95	0.95	0.95	0.95	0.95	0.95	0.95	0.95	0.95	0.95	0.95	0.95								
PHF Volume:	0	0	0	0	0	607	344	363	0	0	404	0								
Reduct Vol:	0	0	0	0	0	0	0	0	0	0	0	0								
FinalVolume:	0	0	0	0	0	607	344	363	0	0	404	0								
Critical Gap Module:																				
Critical Gp:	xxxxx	xxxx	xxxxx	xxxxx	xxxx	6.2	4.1	xxxx	xxxxx	xxxxx	xxxx	xxxxx								
FollowUpTim:	xxxxx	xxxx	xxxxx	xxxxx	xxxx	3.3	2.2	xxxx	xxxxx	xxxxx	xxxx	xxxxx								
Capacity Module:																				
Cnflict Vol:	xxxx	xxxx	xxxxx	xxxx	xxxx	404	404	xxxx	xxxxx	xxxx	xxxx	xxxxx								
Potent Cap.:	xxxx	xxxx	xxxxx	xxxx	xxxx	651	1165	xxxx	xxxxx	xxxx	xxxx	xxxxx								
Move Cap.:	xxxx	xxxx	xxxxx	xxxx	xxxx	651	1165	xxxx	xxxxx	xxxx	xxxx	xxxxx								
Volume/Cap:	xxxx	xxxx	xxxx	xxxx	xxxx	0.93	0.30	xxxx	xxxx	xxxx	xxxx	xxxx								
Level Of Service Module:																				
2Way95thQ:	xxxx	xxxx	xxxxx	xxxx	xxxx	12.6	1.2	xxxx	xxxxx	xxxx	xxxx	xxxxx								
Control Del:	xxxxx	xxxx	xxxxx	xxxxx	xxxx	46.0	9.4	xxxx	xxxxx	xxxxx	xxxx	xxxxx								
LOS by Move:	*	*	*	*	*	E	A	*	*	*	*	*								
Movement:	LT	-	LTR	-	RT	LT	-	LTR	-	RT	LT	-	LTR	-	RT	LT	-	LTR	-	RT
Shared Cap.:	xxxx	xxxx	xxxxx	xxxx	xxxx	xxxxx	xxxx	xxxx	xxxxx	xxxx	xxxx	xxxxx								
SharedQueue:	xxxxx	xxxx	xxxxx	xxxxx	xxxx	xxxxx	xxxxx	xxxx	xxxxx	xxxxx	xxxx	xxxxx								
Shrd ConDel:	xxxxx	xxxx	xxxxx	xxxxx	xxxx	xxxxx	xxxxx	xxxx	xxxxx	xxxxx	xxxx	xxxxx								
Shared LOS:	*	*	*	*	*	*	*	*	*	*	*	*								
ApproachDel:	xxxxxx			46.0			xxxxxx				xxxxxx									
ApproachLOS:	*			E			*				*									

Note: Queue reported is the number of cars per lane.

Church of the Woods
Year 2030 Without Project Traffic Conditions
Sunday Peak Hour

Level Of Service Computation Report
2000 HCM Unsignalized Method (Base Volume Alternative)

Intersection #11 Daley Canyon Road/Daley Canyon Access Road

Average Delay (sec/veh): 4.1 Worst Case Level Of Service: B[13.1]

Approach:	North Bound			South Bound			East Bound			West Bound		
Movement:	L	T	R	L	T	R	L	T	R	L	T	R
Control:	Uncontrolled			Uncontrolled			Stop Sign			Stop Sign		
Rights:	Include			Include			Include			Include		
Lanes:	0 0 1	0	0	0 1	0 0	0	0 0 0	0	0	0 0 0	0	1
Volume Module:												
Base Vol:	0	327	0	307	577	0	0	0	0	0	0	249
Growth Adj:	1.00	1.00	1.00	1.00	1.00	1.00	1.00	1.00	1.00	1.00	1.00	1.00
Initial Bse:	0	327	0	307	577	0	0	0	0	0	0	249
User Adj:	1.00	1.00	1.00	1.00	1.00	1.00	1.00	1.00	1.00	1.00	1.00	1.00
PHF Adj:	0.95	0.95	0.95	0.95	0.95	0.95	0.95	0.95	0.95	0.95	0.95	0.95
PHF Volume:	0	344	0	323	607	0	0	0	0	0	0	262
Reduct Vol:	0	0	0	0	0	0	0	0	0	0	0	0
FinalVolume:	0	344	0	323	607	0	0	0	0	0	0	262
Critical Gap Module:												
Critical Gp:	xxxxx	xxxx	xxxxx	4.1	xxxx	xxxxx	xxxxx	xxxx	xxxxx	xxxxx	xxxx	6.2
FollowUpTim:	xxxxx	xxxx	xxxxx	2.2	xxxx	xxxxx	xxxxx	xxxx	xxxxx	xxxxx	xxxx	3.3
Capacity Module:												
Cnflict Vol:	xxxx	xxxx	xxxxx	344	xxxx	xxxxx	xxxx	xxxx	xxxxx	xxxx	xxxx	344
Potent Cap.:	xxxx	xxxx	xxxxx	1226	xxxx	xxxxx	xxxx	xxxx	xxxxx	xxxx	xxxx	703
Move Cap.:	xxxx	xxxx	xxxxx	1226	xxxx	xxxxx	xxxx	xxxx	xxxxx	xxxx	xxxx	703
Volume/Cap:	xxxx	xxxx	xxxx	0.26	xxxx	xxxx	xxxx	xxxx	xxxx	xxxx	xxxx	0.37
Level Of Service Module:												
2Way95thQ:	xxxx	xxxx	xxxxx	1.1	xxxx	xxxxx	xxxx	xxxx	xxxxx	xxxx	xxxx	1.7
Control Del:	xxxxx	xxxx	xxxxx	9.0	xxxx	xxxxx	xxxxx	xxxx	xxxxx	xxxxx	xxxx	13.1
LOS by Move:	*	*	*	A	*	*	*	*	*	*	*	B
Movement:	LT -	LTR -	RT	LT -	LTR -	RT	LT -	LTR -	RT	LT -	LTR -	RT
Shared Cap.:	xxxx	xxxx	xxxxx	xxxx	xxxx	xxxxx	xxxx	xxxx	xxxxx	xxxx	xxxx	xxxxx
SharedQueue:	xxxxx	xxxx	xxxxx	1.1	xxxx	xxxxx	xxxxx	xxxx	xxxxx	xxxxx	xxxx	xxxxx
Shrd ConDel:	xxxxx	xxxx	xxxxx	9.0	xxxx	xxxxx	xxxxx	xxxx	xxxxx	xxxxx	xxxx	xxxxx
Shared LOS:	*	*	*	A	*	*	*	*	*	*	*	*
ApproachDel:	xxxxxx			xxxxxx			xxxxxx			13.1		
ApproachLOS:	*			*			*			B		

Note: Queue reported is the number of cars per lane.

Church of the Woods
Year 2030 Without Project Traffic Conditions
Sunday Peak Hour

Level Of Service Computation Report
2000 HCM Unsignalized Method (Base Volume Alternative)

Intersection #12 Daley Canyon Access Road/State Route 18

Average Delay (sec/veh): 12.6 Worst Case Level Of Service: F[52.9]

Approach:	North Bound					South Bound					East Bound					West Bound				
Movement:	L	-	T	-	R	L	-	T	-	R	L	-	T	-	R	L	-	T	-	R
Control:	Stop Sign					Stop Sign					Uncontrolled					Uncontrolled				
Rights:	Include					Include					Include					Include				
Lanes:	0	0	0	0	0	1	0	0	0	0	0	0	1	0	0	0	0	1	0	1
Volume Module:																				
Base Vol:	0	0	0			307	0	0			0	345	0			0	384	249		
Growth Adj:	1.00	1.00	1.00			1.00	1.00	1.00			1.00	1.00	1.00			1.00	1.00	1.00		
Initial Bse:	0	0	0			307	0	0			0	345	0			0	384	249		
User Adj:	1.00	1.00	1.00			1.00	1.00	1.00			1.00	1.00	1.00			1.00	1.00	1.00		
PHF Adj:	0.95	0.95	0.95			0.95	0.95	0.95			0.95	0.95	0.95			0.95	0.95	0.95		
PHF Volume:	0	0	0			323	0	0			0	363	0			0	404	262		
Reduct Vol:	0	0	0			0	0	0			0	0	0			0	0	0		
FinalVolume:	0	0	0			323	0	0			0	363	0			0	404	262		
Critical Gap Module:																				
Critical Gp:	xxxxx	xxxx	xxxxx			6.4	xxxx	xxxxx			xxxxx	xxxx	xxxxx			xxxxx	xxxx	xxxxx		
FollowUpTim:	xxxxx	xxxx	xxxxx			3.5	xxxx	xxxxx			xxxxx	xxxx	xxxxx			xxxxx	xxxx	xxxxx		
Capacity Module:																				
Cnflict Vol:	xxxx	xxxx	xxxxx			767	xxxx	xxxxx			xxxx	xxxx	xxxxx			xxxx	xxxx	xxxxx		
Potent Cap.:	xxxx	xxxx	xxxxx			373	xxxx	xxxxx			xxxx	xxxx	xxxxx			xxxx	xxxx	xxxxx		
Move Cap.:	xxxx	xxxx	xxxxx			373	xxxx	xxxxx			xxxx	xxxx	xxxxx			xxxx	xxxx	xxxxx		
Volume/Cap:	xxxx	xxxx	xxxx			0.87	xxxx	xxxx			xxxx	xxxx	xxxx			xxxx	xxxx	xxxx		
Level Of Service Module:																				
2Way95thQ:	xxxx	xxxx	xxxxx			8.3	xxxx	xxxxx			xxxx	xxxx	xxxxx			xxxx	xxxx	xxxxx		
Control Del:	xxxxx	xxxx	xxxxx			52.9	xxxx	xxxxx			xxxxx	xxxx	xxxxx			xxxxx	xxxx	xxxxx		
LOS by Move:	*	*	*			F	*	*			*	*	*			*	*	*		
Movement:	LT	-	LTR	-	RT	LT	-	LTR	-	RT	LT	-	LTR	-	RT	LT	-	LTR	-	RT
Shared Cap.:	xxxx	xxxx	xxxxx			xxxx	xxxx	xxxxx			xxxx	xxxx	xxxxx			xxxx	xxxx	xxxxx		
SharedQueue:	xxxxx	xxxx	xxxxx			xxxxx	xxxx	xxxxx			xxxxx	xxxx	xxxxx			xxxxx	xxxx	xxxxx		
Shrd ConDel:	xxxxx	xxxx	xxxxx			xxxxx	xxxx	xxxxx			xxxxx	xxxx	xxxxx			xxxxx	xxxx	xxxxx		
Shared LOS:	*	*	*			*	*	*			*	*	*			*	*	*		
ApproachDel:	xxxxxx					52.9					xxxxxx					xxxxxx				
ApproachLOS:	*					F					*					*				

Note: Queue reported is the number of cars per lane.

Church of the Woods
Year 2030 Without Project Traffic Conditions
Sunday Peak Hour

Level Of Service Computation Report
2000 HCM Unsignalized Method (Base Volume Alternative)

Intersection #13 State Route 173/State Route 18

Average Delay (sec/veh): 18.8 Worst Case Level Of Service: F[66.5]

Approach:	North Bound					South Bound					East Bound					West Bound				
Movement:	L	-	T	-	R	L	-	T	-	R	L	-	T	-	R	L	-	T	-	R
Control:	Stop Sign					Stop Sign					Uncontrolled					Uncontrolled				
Rights:	Include					Include					Include					Include				
Lanes:	0	0	0	0	0	0	0	1!	0	0	1	0	1	0	0	0	0	1	0	1
Volume Module:																				
Base Vol:	0	0	0	80	0	244	382	215	0	0	222	207								
Growth Adj:	1.00	1.00	1.00	1.00	1.00	1.00	1.00	1.00	1.00	1.00	1.00	1.00								
Initial Bse:	0	0	0	80	0	244	382	215	0	0	222	207								
User Adj:	1.00	1.00	1.00	1.00	1.00	1.00	1.00	1.00	1.00	1.00	1.00	1.00								
PHF Adj:	0.95	0.95	0.95	0.95	0.95	0.95	0.95	0.95	0.95	0.95	0.95	0.95								
PHF Volume:	0	0	0	84	0	257	402	226	0	0	234	218								
Reduct Vol:	0	0	0	0	0	0	0	0	0	0	0	0								
FinalVolume:	0	0	0	84	0	257	402	226	0	0	234	218								
Critical Gap Module:																				
Critical Gp:	xxxxx	xxxx	xxxxx	6.4	6.5	6.2	4.1	xxxx	xxxxx	xxxxx	xxxx	xxxxx								
FollowUpTim:	xxxxx	xxxx	xxxxx	3.5	4.0	3.3	2.2	xxxx	xxxxx	xxxxx	xxxx	xxxxx								
Capacity Module:																				
Cnflict Vol:	xxxx	xxxx	xxxxx	1264	1264	234	452	xxxx	xxxxx	xxxx	xxxx	xxxxx								
Potent Cap.:	xxxx	xxxx	xxxxx	189	171	810	1120	xxxx	xxxxx	xxxx	xxxx	xxxxx								
Move Cap.:	xxxx	xxxx	xxxxx	136	110	810	1120	xxxx	xxxxx	xxxx	xxxx	xxxxx								
Volume/Cap:	xxxx	xxxx	xxxx	0.62	0.00	0.32	0.36	xxxx	xxxx	xxxx	xxxx	xxxx								
Level Of Service Module:																				
2Way95thQ:	xxxx	xxxx	xxxxx	xxxx	xxxx	xxxxx	1.7	xxxx	xxxxx	xxxx	xxxx	xxxxx								
Control Del:	xxxxx	xxxx	xxxxx	xxxxx	xxxx	xxxxx	10.0	xxxx	xxxxx	xxxxx	xxxx	xxxxx								
LOS by Move:	*	*	*	*	*	*	B	*	*	*	*	*								
Movement:	LT	-	LTR	-	RT	LT	-	LTR	-	RT	LT	-	LTR	-	RT	LT	-	LTR	-	RT
Shared Cap.:	xxxx	xxxx	xxxxx	xxxx	365	xxxxx	xxxx	xxxx	xxxxx	xxxx	xxxx	xxxxx								
SharedQueue:	xxxxx	xxxx	xxxxx	xxxxx	9.9	xxxxx	xxxxx	xxxx	xxxxx	xxxxx	xxxx	xxxxx								
Shrd ConDel:	xxxxx	xxxx	xxxxx	xxxxx	66.5	xxxxx	xxxxx	xxxx	xxxxx	xxxxx	xxxx	xxxxx								
Shared LOS:	*	*	*	*	F	*	*	*	*	*	*	*								
ApproachDel:	xxxxxx				66.5		xxxxxx				xxxxxx									
ApproachLOS:	*				F		*				*									

Note: Queue reported is the number of cars per lane.

YEAR 2030 WITH PROJECT CONDITIONS

Church of the Woods
Year 2030 With Project Traffic Conditions
Saturday Peak Hour

Level Of Service Computation Report
2000 HCM Unsignalized Method (Base Volume Alternative)

Intersection #1 North Road/State Route 189

Average Delay (sec/veh): 19.1 Worst Case Level Of Service: F[54.5]

Approach:	North Bound			South Bound			East Bound			West Bound		
Movement:	L	T	R	L	T	R	L	T	R	L	T	R
Control:	Stop Sign			Stop Sign			Uncontrolled			Uncontrolled		
Rights:	Include			Include			Include			Include		
Lanes:	0 0 0 0 0			0 0 1! 0 0			0 1 0 0 0			0 0 0 1 0		
Volume Module:												
Base Vol:	0	0	0	287	0	87	64	214	0	0	205	239
Growth Adj:	1.00	1.00	1.00	1.00	1.00	1.00	1.00	1.00	1.00	1.00	1.00	1.00
Initial Bse:	0	0	0	287	0	87	64	214	0	0	205	239
User Adj:	1.00	1.00	1.00	1.00	1.00	1.00	1.00	1.00	1.00	1.00	1.00	1.00
PHF Adj:	0.95	0.95	0.95	0.95	0.95	0.95	0.95	0.95	0.95	0.95	0.95	0.95
PHF Volume:	0	0	0	302	0	92	67	225	0	0	216	252
Reduct Vol:	0	0	0	0	0	0	0	0	0	0	0	0
FinalVolume:	0	0	0	302	0	92	67	225	0	0	216	252
Critical Gap Module:												
Critical Gp:	xxxxx	xxxx	xxxxx	6.4	6.5	6.2	4.1	xxxx	xxxxx	xxxxx	xxxx	xxxxx
FollowUpTim:	xxxxx	xxxx	xxxxx	3.5	4.0	3.3	2.2	xxxx	xxxxx	xxxxx	xxxx	xxxxx
Capacity Module:												
Cnflict Vol:	xxxx	xxxx	xxxxx	702	702	342	467	xxxx	xxxxx	xxxx	xxxx	xxxxx
Potent Cap.:	xxxx	xxxx	xxxxx	408	365	706	1105	xxxx	xxxxx	xxxx	xxxx	xxxxx
Move Cap.:	xxxx	xxxx	xxxxx	388	342	706	1105	xxxx	xxxxx	xxxx	xxxx	xxxxx
Volume/Cap:	xxxx	xxxx	xxxx	0.78	0.00	0.13	0.06	xxxx	xxxx	xxxx	xxxx	xxxx
Level Of Service Module:												
2Way95thQ:	xxxx	xxxx	xxxxx	xxxx	xxxx	xxxxx	0.2	xxxx	xxxxx	xxxx	xxxx	xxxxx
Control Del:	xxxxx	xxxx	xxxxx	xxxxx	xxxx	xxxxx	8.5	xxxx	xxxxx	xxxxx	xxxx	xxxxx
LOS by Move:	*	*	*	*	*	*	A	*	*	*	*	*
Movement:	LT	LTR	RT	LT	LTR	RT	LT	LTR	RT	LT	LTR	RT
Shared Cap.:	xxxx	xxxx	xxxxx	xxxx	433	xxxxx	xxxx	xxxx	xxxxx	xxxx	xxxx	xxxxx
SharedQueue:	xxxxx	xxxx	xxxxx	xxxxx	9.9	xxxxx	0.2	xxxx	xxxxx	xxxxx	xxxx	xxxxx
Shrd ConDel:	xxxxx	xxxx	xxxxx	xxxxx	54.5	xxxxx	8.5	xxxx	xxxxx	xxxxx	xxxx	xxxxx
Shared LOS:	*	*	*	*	F	*	A	*	*	*	*	*
ApproachDel:	xxxxxx			54.5			xxxxxx			xxxxxx		
ApproachLOS:	*			F			*			*		

Note: Queue reported is the number of cars per lane.

Church of the Woods
Year 2030 With Project Traffic Conditions
Saturday Peak Hour

Level Of Service Computation Report
2000 HCM Unsignalized Method (Base Volume Alternative)

Intersection #2 Bear Springs Road/State Route 189

Average Delay (sec/veh): 8.7 Worst Case Level Of Service: D[30.8]

Approach:	North Bound			South Bound			East Bound			West Bound		
Movement:	L - T - R			L - T - R			L - T - R			L - T - R		
Control:	Stop Sign			Stop Sign			Uncontrolled			Uncontrolled		
Rights:	Include			Include			Include			Include		
Lanes:	0 0 1! 0 0			0 0 1! 0 0			0 0 1! 0 0			0 0 1! 0 0		
Volume Module:												
Base Vol:	37	30	24	60	23	104	111	284	55	17	279	55
Growth Adj:	1.00	1.00	1.00	1.00	1.00	1.00	1.00	1.00	1.00	1.00	1.00	1.00
Initial Bse:	37	30	24	60	23	104	111	284	55	17	279	55
User Adj:	1.00	1.00	1.00	1.00	1.00	1.00	1.00	1.00	1.00	1.00	1.00	1.00
PHF Adj:	0.95	0.95	0.95	0.95	0.95	0.95	0.95	0.95	0.95	0.95	0.95	0.95
PHF Volume:	39	32	25	63	24	109	117	299	58	18	294	58
Reduct Vol:	0	0	0	0	0	0	0	0	0	0	0	0
FinalVolume:	39	32	25	63	24	109	117	299	58	18	294	58
Critical Gap Module:												
Critical Gp:	7.1	6.5	6.2	7.1	6.5	6.2	4.1	xxxx	xxxxx	4.1	xxxx	xxxxx
FollowUpTim:	3.5	4.0	3.3	3.5	4.0	3.3	2.2	xxxx	xxxxx	2.2	xxxx	xxxxx
Capacity Module:												
Cnflict Vol:	987	949	328	948	949	323	352	xxxx	xxxxx	357	xxxx	xxxxx
Potent Cap.:	228	263	718	243	263	723	1218	xxxx	xxxxx	1213	xxxx	xxxxx
Move Cap.:	163	232	718	191	232	723	1218	xxxx	xxxxx	1213	xxxx	xxxxx
Volume/Cap:	0.24	0.14	0.04	0.33	0.10	0.15	0.10	xxxx	xxxx	0.01	xxxx	xxxx
Level Of Service Module:												
2Way95thQ:	xxxx	xxxx	xxxxx	xxxx	xxxx	xxxxx	0.3	xxxx	xxxxx	0.0	xxxx	xxxxx
Control Del:	xxxxx	xxxx	xxxxx	xxxxx	xxxx	xxxxx	8.3	xxxx	xxxxx	8.0	xxxx	xxxxx
LOS by Move:	*	*	*	*	*	*	A	*	*	A	*	*
Movement:	LT - LTR - RT			LT - LTR - RT			LT - LTR - RT			LT - LTR - RT		
Shared Cap.:	xxxx	233	xxxxx	xxxx	336	xxxxx	xxxx	xxxx	xxxxx	xxxx	xxxx	xxxxx
SharedQueue:	xxxxx	1.9	xxxxx	xxxxx	3.5	xxxxx	xxxxx	xxxx	xxxxx	xxxxx	xxxx	xxxxx
Shrd ConDel:	xxxxx	30.8	xxxxx	xxxxx	29.8	xxxxx	xxxxx	xxxx	xxxxx	xxxxx	xxxx	xxxxx
Shared LOS:	*	D	*	*	D	*	*	*	*	*	*	*
ApproachDel:	30.8			29.8			xxxxxx			xxxxxx		
ApproachLOS:	D			D			*			*		

Note: Queue reported is the number of cars per lane.

Church of the Woods
Year 2030 With Project Traffic Conditions
Saturday Peak Hour

Level Of Service Computation Report
2000 HCM Unsignalized Method (Base Volume Alternative)

Intersection #3 Grass Valley Road/State Route 189

Average Delay (sec/veh): 323.4 Worst Case Level Of Service: F[615.7]

Approach:	North Bound			South Bound			East Bound			West Bound		
Movement:	L	T	R	L	T	R	L	T	R	L	T	R
Control:	Stop Sign			Stop Sign			Uncontrolled			Uncontrolled		
Rights:	Include			Include			Include			Include		
Lanes:	0 0 0 0 0			0 0 1! 0 0			1 0 1 0 0			0 0 0 1 0		
Volume Module:												
Base Vol:	0	0	0	547	0	416	203	270	0	0	110	293
Growth Adj:	1.00	1.00	1.00	1.00	1.00	1.00	1.00	1.00	1.00	1.00	1.00	1.00
Initial Bse:	0	0	0	547	0	416	203	270	0	0	110	293
User Adj:	1.00	1.00	1.00	1.00	1.00	1.00	1.00	1.00	1.00	1.00	1.00	1.00
PHF Adj:	0.95	0.95	0.95	0.95	0.95	0.95	0.95	0.95	0.95	0.95	0.95	0.95
PHF Volume:	0	0	0	576	0	438	214	284	0	0	116	308
Reduct Vol:	0	0	0	0	0	0	0	0	0	0	0	0
FinalVolume:	0	0	0	576	0	438	214	284	0	0	116	308
Critical Gap Module:												
Critical Gp:	xxxxx	xxxx	xxxxx	6.4	6.5	6.2	4.1	xxxx	xxxxx	xxxxx	xxxx	xxxxx
FollowUpTim:	xxxxx	xxxx	xxxxx	3.5	4.0	3.3	2.2	xxxx	xxxxx	xxxxx	xxxx	xxxxx
Capacity Module:												
Cnflict Vol:	xxxx	xxxx	xxxxx	982	982	270	424	xxxx	xxxxx	xxxx	xxxx	xxxxx
Potent Cap.:	xxxx	xxxx	xxxxx	279	251	774	1146	xxxx	xxxxx	xxxx	xxxx	xxxxx
Move Cap.:	xxxx	xxxx	xxxxx	239	204	774	1146	xxxx	xxxxx	xxxx	xxxx	xxxxx
Total Cap:	0	243	xxxxx	331	293	xxxxx	xxxx	xxxx	xxxxx	xxxx	xxxx	xxxxx
Volume/Cap:	xxxx	xxxx	xxxx	1.74	0.00	0.57	0.19	xxxx	xxxx	xxxx	xxxx	xxxx
Level Of Service Module:												
2Way95thQ:	xxxx	xxxx	xxxxx	xxxx	xxxx	xxxxx	0.7	xxxx	xxxxx	xxxx	xxxx	xxxxx
Control Del:	xxxxx	xxxx	xxxxx	xxxxx	xxxx	xxxxx	8.9	xxxx	xxxxx	xxxxx	xxxx	xxxxx
LOS by Move:	*	*	*	*	*	*	A	*	*	*	*	*
Movement:	LT	LTR	RT	LT	LTR	RT	LT	LTR	RT	LT	LTR	RT
Shared Cap.:	xxxx	xxxx	xxxxx	xxxx	439	xxxxx	xxxx	xxxx	xxxxx	xxxx	xxxx	xxxxx
SharedQueue:	xxxxx	xxxx	xxxxx	xxxxx	76.8	xxxxx	xxxxx	xxxx	xxxxx	xxxxx	xxxx	xxxxx
Shrd ConDel:	xxxxx	xxxx	xxxxx	xxxxx	616	xxxxx	xxxxx	xxxx	xxxxx	xxxxx	xxxx	xxxxx
Shared LOS:	*	*	*	*	F	*	*	*	*	*	*	*
ApproachDel:	xxxxxx			615.7			xxxxxx			xxxxxx		
ApproachLOS:	*			F			*			*		

Note: Queue reported is the number of cars per lane.

Church of the Woods
Year 2030 With Project Traffic Conditions
Saturday Peak Hour

Level Of Service Computation Report
2000 HCM 4-Way Stop Method (Base Volume Alternative)

Intersection #4 Daley Canyon Road/State Route 189

Cycle (sec):	100	Critical Vol./Cap.(X):	1.786
Loss Time (sec):	0 (Y+R=4.0 sec)	Average Delay (sec/veh):	272.0
Optimal Cycle:	0	Level Of Service:	F

Approach:	North Bound				South Bound				East Bound				West Bound			
Movement:	L	- T	- R		L	- T	- R		L	- T	- R		L	- T	- R	
Control:	Stop Sign				Stop Sign				Stop Sign				Stop Sign			
Rights:	Include				Include				Include				Include			
Min. Green:	10	10	10	10	10	10	10	10	10	10	10	10	10	10	10	10
Lanes:	0 1	0 0	0	0 0	0 0	0 1	0	0 0	1! 0	0	0 0	0 0	0 0	0 0	0 0	0
Volume Module:																
Base Vol:	303	580	0	0	433	97	401	0	419	0	0	0				
Growth Adj:	1.00	1.00	1.00	1.00	1.00	1.00	1.00	1.00	1.00	1.00	1.00	1.00				
Initial Bse:	303	580	0	0	433	97	401	0	419	0	0	0				
User Adj:	1.00	1.00	1.00	1.00	1.00	1.00	1.00	1.00	1.00	1.00	1.00	1.00				
PHF Adj:	0.95	0.95	0.95	0.95	0.95	0.95	0.95	0.95	0.95	0.95	0.95	0.95				
PHF Volume:	319	611	0	0	456	102	422	0	441	0	0	0				
Reduct Vol:	0	0	0	0	0	0	0	0	0	0	0	0				
Reduced Vol:	319	611	0	0	456	102	422	0	441	0	0	0				
PCE Adj:	1.00	1.00	1.00	1.00	1.00	1.00	1.00	1.00	1.00	1.00	1.00	1.00				
MLF Adj:	1.00	1.00	1.00	1.00	1.00	1.00	1.00	1.00	1.00	1.00	1.00	1.00				
FinalVolume:	319	611	0	0	456	102	422	0	441	0	0	0				
Saturation Flow Module:																
Adjustment:	1.00	1.00	1.00	1.00	1.00	1.00	1.00	1.00	1.00	1.00	1.00	1.00				
Lanes:	0.34	0.66	0.00	0.00	0.82	0.18	0.49	0.00	0.51	0.00	0.00	0.00				
Final Sat.:	179	342	0	0	436	98	269	0	281	0	0	0				
Capacity Analysis Module:																
Vol/Sat:	1.79	1.79	xxxx	xxxx	1.04	1.04	1.57	xxxx	1.57	xxxx	xxxx	xxxx				
Crit Moves:	****				****		****									
Delay/Veh:	378.7	379	0.0	0.0	76.9	76.9	283.2	0.0	283.2	0.0	0.0	0.0				
Delay Adj:	1.00	1.00	1.00	1.00	1.00	1.00	1.00	1.00	1.00	1.00	1.00	1.00				
AdjDel/Veh:	378.7	379	0.0	0.0	76.9	76.9	283.2	0.0	283.2	0.0	0.0	0.0				
LOS by Move:	F	F	*	*	F	F	F	*	F	*	*	*				
ApproachDel:	378.7				76.9		283.2			xxxxxx						
Delay Adj:	1.00				1.00		1.00			xxxxx						
ApprAdjDel:	378.7				76.9		283.2			xxxxxx						
LOS by Appr:	F				F		F			*						
AllWayAvgQ:	53.3	53.3	53.3	10.0	10.0	10.0	41.8	41.8	41.8	0.0	0.0	0.0				

Note: Queue reported is the number of cars per lane.

Church of the Woods
Year 2030 With Project Traffic Conditions
Saturday Peak Hour

Level Of Service Computation Report
2000 HCM 4-Way Stop Method (Base Volume Alternative)

Intersection #5 North Bay Road/State Route 189

Cycle (sec): 100 Critical Vol./Cap.(X): 1.158
Loss Time (sec): 0 (Y+R=4.0 sec) Average Delay (sec/veh): 63.4
Optimal Cycle: 0 Level Of Service: F

Approach:	North Bound			South Bound			East Bound			West Bound		
Movement:	L - T - R			L - T - R			L - T - R			L - T - R		
Control:	Stop Sign			Stop Sign			Stop Sign			Stop Sign		
Rights:	Include			Include			Include			Include		
Min. Green:	10	10	10	10	10	10	10	10	10	10	10	10
Lanes:	0 0 0	0 0		1 0 0	0 1		1 0 1	0 0		0 0 0	1 0	
Volume Module:												
Base Vol:	0	0	0	235	0	471	499	417	0	0	285	177
Growth Adj:	1.00	1.00	1.00	1.00	1.00	1.00	1.00	1.00	1.00	1.00	1.00	1.00
Initial Bse:	0	0	0	235	0	471	499	417	0	0	285	177
User Adj:	1.00	1.00	1.00	1.00	1.00	1.00	1.00	1.00	1.00	1.00	1.00	1.00
PHF Adj:	0.95	0.95	0.95	0.95	0.95	0.95	0.95	0.95	0.95	0.95	0.95	0.95
PHF Volume:	0	0	0	247	0	496	525	439	0	0	300	186
Reduct Vol:	0	0	0	0	0	0	0	0	0	0	0	0
Reduced Vol:	0	0	0	247	0	496	525	439	0	0	300	186
PCE Adj:	1.00	1.00	1.00	1.00	1.00	1.00	1.00	1.00	1.00	1.00	1.00	1.00
MLF Adj:	1.00	1.00	1.00	1.00	1.00	1.00	1.00	1.00	1.00	1.00	1.00	1.00
FinalVolume:	0	0	0	247	0	496	525	439	0	0	300	186
Saturation Flow Module:												
Adjustment:	1.00	1.00	1.00	1.00	1.00	1.00	1.00	1.00	1.00	1.00	1.00	1.00
Lanes:	0.00	0.00	0.00	1.00	0.00	1.00	1.00	1.00	0.00	0.00	0.62	0.38
Final Sat.:	0	0	0	450	0	529	454	485	0	0	319	198
Capacity Analysis Module:												
Vol/Sat:	xxxx	xxxx	xxxx	0.55	xxxx	0.94	1.16	0.91	xxxx	xxxx	0.94	0.94
Crit Moves:						****	****				****	
Delay/Veh:	0.0	0.0	0.0	20.0	0.0	50.8	119.2	47.9	0.0	0.0	52.3	52.3
Delay Adj:	1.00	1.00	1.00	1.00	1.00	1.00	1.00	1.00	1.00	1.00	1.00	1.00
AdjDel/Veh:	0.0	0.0	0.0	20.0	0.0	50.8	119.2	47.9	0.0	0.0	52.3	52.3
LOS by Move:	*	*	*	C	*	F	F	E	*	*	F	F
ApproachDel:	xxxxxx			40.5			86.7			52.3		
Delay Adj:	xxxxx			1.00			1.00			1.00		
ApprAdjDel:	xxxxxx			40.5			86.7			52.3		
LOS by Appr:	*			E			F			F		
AllWayAvgQ:	0.0	0.0	0.0	1.2	0.0	6.1	13.7	5.1	0.0	6.1	6.1	6.1

Note: Queue reported is the number of cars per lane.

Church of the Woods
Year 2030 With Project Traffic Conditions
Saturday Peak Hour

Level Of Service Computation Report
2000 HCM Unsignalized Method (Base Volume Alternative)

Intersection #6 Lake Gregory Road/State Route 189

Average Delay (sec/veh): 5.8 Worst Case Level Of Service: C[24.4]

Approach:	North Bound					South Bound					East Bound					West Bound				
Movement:	L	-	T	-	R	L	-	T	-	R	L	-	T	-	R	L	-	T	-	R
Control:	Uncontrolled					Uncontrolled					Stop Sign					Stop Sign				
Rights:	Include					Include					Include					Include				
Lanes:	0	0	0	1	0	0	1	0	0	0	0	0	0	0	0	0	0	1!	0	0
Volume Module:																				
Base Vol:	0	262		86		131	355		0		0		0		0	93		0		107
Growth Adj:	1.00	1.00		1.00		1.00	1.00		1.00		1.00		1.00		1.00	1.00		1.00		1.00
Initial Bse:	0	262		86		131	355		0		0		0		0	93		0		107
User Adj:	1.00	1.00		1.00		1.00	1.00		1.00		1.00		1.00		1.00	1.00		1.00		1.00
PHF Adj:	0.95	0.95		0.95		0.95	0.95		0.95		0.95		0.95		0.95	0.95		0.95		0.95
PHF Volume:	0	276		91		138	374		0		0		0		0	98		0		113
Reduct Vol:	0	0		0		0	0		0		0		0		0	0		0		0
FinalVolume:	0	276		91		138	374		0		0		0		0	98		0		113
Critical Gap Module:																				
Critical Gp:	xxxxx	xxxx		xxxxx		4.1	xxxx		xxxxx		xxxxx		xxxx		xxxxx	6.4		6.5		6.2
FollowUpTim:	xxxxx	xxxx		xxxxx		2.2	xxxx		xxxxx		xxxxx		xxxx		xxxxx	3.5		4.0		3.3
Capacity Module:																				
Cnflict Vol:	xxxx	xxxx		xxxxx		366	xxxx		xxxxx		xxxx		xxxx		xxxxx	971		971		321
Potent Cap.:	xxxx	xxxx		xxxxx		1203	xxxx		xxxxx		xxxx		xxxx		xxxxx	283		255		724
Move Cap.:	xxxx	xxxx		xxxxx		1203	xxxx		xxxxx		xxxx		xxxx		xxxxx	256		223		724
Volume/Cap:	xxxx	xxxx		xxxx		0.11	xxxx		xxxx		xxxx		xxxx		xxxx	0.38		0.00		0.16
Level Of Service Module:																				
2Way95thQ:	xxxx	xxxx		xxxxx		0.4	xxxx		xxxxx		xxxx		xxxx		xxxxx	xxxx		xxxx		xxxxx
Control Del:	xxxxx	xxxx		xxxxx		8.4	xxxx		xxxxx		xxxxx		xxxx		xxxxx	xxxxx		xxxx		xxxxx
LOS by Move:	*	*		*		A	*		*		*		*		*	*		*		*
Movement:	LT	-	LTR	-	RT	LT	-	LTR	-	RT	LT	-	LTR	-	RT	LT	-	LTR	-	RT
Shared Cap.:	xxxx	xxxx		xxxxx		xxxx	xxxx		xxxxx		xxxx		xxxx		xxxxx	xxxx		392		xxxxx
SharedQueue:	xxxxx	xxxx		xxxxx		0.4	xxxx		xxxxx		xxxxx		xxxx		xxxxx	xxxxx		3.1		xxxxx
Shrd ConDel:	xxxxx	xxxx		xxxxx		8.4	xxxx		xxxxx		xxxxx		xxxx		xxxxx	xxxxx		24.4		xxxxx
Shared LOS:	*	*		*		A	*		*		*		*		*	*		C		*
ApproachDel:	xxxxxx					xxxxxx					xxxxxx							24.4		
ApproachLOS:	*					*					*							C		

Note: Queue reported is the number of cars per lane.

Church of the Woods
Year 2030 With Project Traffic Conditions
Saturday Peak Hour

Level Of Service Computation Report
2000 HCM Unsignalized Method (Base Volume Alternative)

Intersection #7 Lake Gregory Drive/State Route 18

Average Delay (sec/veh): 31.6 Worst Case Level Of Service: F[132.4]

Approach:	North Bound			South Bound			East Bound			West Bound		
Movement:	L	T	R	L	T	R	L	T	R	L	T	R
Control:	Stop Sign			Stop Sign			Uncontrolled			Uncontrolled		
Rights:	Include			Include			Include			Include		
Lanes:	0 0 0 0 0			1 0 0 0 1			1 0 1 0 0			0 0 1 0 1		
Volume Module:												
Base Vol:	0	0	0	331	0	118	148	568	0	0	565	200
Growth Adj:	1.00	1.00	1.00	1.00	1.00	1.00	1.00	1.00	1.00	1.00	1.00	1.00
Initial Bse:	0	0	0	331	0	118	148	568	0	0	565	200
User Adj:	1.00	1.00	1.00	1.00	1.00	1.00	1.00	1.00	1.00	1.00	1.00	1.00
PHF Adj:	0.95	0.95	0.95	0.95	0.95	0.95	0.95	0.95	0.95	0.95	0.95	0.95
PHF Volume:	0	0	0	348	0	124	156	598	0	0	595	211
Reduct Vol:	0	0	0	0	0	0	0	0	0	0	0	0
FinalVolume:	0	0	0	348	0	124	156	598	0	0	595	211
Critical Gap Module:												
Critical Gp:	xxxxx	xxxx	xxxxx	6.4	xxxx	6.2	4.1	xxxx	xxxxx	xxxxx	xxxx	xxxxx
FollowUpTim:	xxxxx	xxxx	xxxxx	3.5	xxxx	3.3	2.2	xxxx	xxxxx	xxxxx	xxxx	xxxxx
Capacity Module:												
Cnflict Vol:	xxxx	xxxx	xxxxx	1504	xxxx	595	805	xxxx	xxxxx	xxxx	xxxx	xxxxx
Potent Cap.:	xxxx	xxxx	xxxxx	135	xxxx	508	828	xxxx	xxxxx	xxxx	xxxx	xxxxx
Move Cap.:	xxxx	xxxx	xxxxx	115	xxxx	508	828	xxxx	xxxxx	xxxx	xxxx	xxxxx
Total Cap:	128	189	xxxxx	280	250	xxxxx	xxxx	xxxx	xxxxx	xxxx	xxxx	xxxxx
Volume/Cap:	xxxx	xxxx	xxxx	1.25	xxxx	0.24	0.19	xxxx	xxxx	xxxx	xxxx	xxxx
Level Of Service Module:												
2Way95thQ:	xxxx	xxxx	xxxxx	16.5	xxxx	1.0	0.7	xxxx	xxxxx	xxxx	xxxx	xxxxx
Control Del:	xxxxx	xxxx	xxxxx	174.5	xxxx	14.4	10.4	xxxx	xxxxx	xxxxx	xxxx	xxxxx
LOS by Move:	*	*	*	F	*	B	B	*	*	*	*	*
Movement:	LT	LTR	RT	LT	LTR	RT	LT	LTR	RT	LT	LTR	RT
Shared Cap.:	xxxx	xxxx	xxxxx	xxxx	xxxx	xxxxx	xxxx	xxxx	xxxxx	xxxx	xxxx	xxxxx
SharedQueue:	xxxxx	xxxx	xxxxx	xxxxx	xxxx	xxxxx	xxxxx	xxxx	xxxxx	xxxxx	xxxx	xxxxx
Shrd ConDel:	xxxxx	xxxx	xxxxx	xxxxx	xxxx	xxxxx	xxxxx	xxxx	xxxxx	xxxxx	xxxx	xxxxx
Shared LOS:	*	*	*	*	*	*	*	*	*	*	*	*
ApproachDel:	xxxxxx			132.4			xxxxxx			xxxxxx		
ApproachLOS:	*			F			*			*		

Note: Queue reported is the number of cars per lane.

Church of the Woods
Year 2030 With Project Traffic Conditions
Saturday Peak Hour

Level Of Service Computation Report
2000 HCM Unsignalized Method (Base Volume Alternative)

Intersection #8 Bear Springs Road/State Route 18

Average Delay (sec/veh): 6.7 Worst Case Level Of Service: F[101.4]

Approach:	North Bound						South Bound						East Bound						West Bound					
Movement:	L	-	T	-	R		L	-	T	-	R		L	-	T	-	R		L	-	T	-	R	
Control:	Stop Sign						Stop Sign						Uncontrolled						Uncontrolled					
Rights:	Include						Include						Include						Include					
Lanes:	0	0	1!	0	0		0	0	1!	0	0		1	0	0	1	0		1	0	0	1	0	
Volume Module:																								
Base Vol:	2	0	7	76	0	53	82	971	2	16	883	47												
Growth Adj:	1.00	1.00	1.00	1.00	1.00	1.00	1.00	1.00	1.00	1.00	1.00	1.00												
Initial Bse:	2	0	7	76	0	53	82	971	2	16	883	47												
User Adj:	1.00	1.00	1.00	1.00	1.00	1.00	1.00	1.00	1.00	1.00	1.00	1.00												
PHF Adj:	0.95	0.95	0.95	0.95	0.95	0.95	0.95	0.95	0.95	0.95	0.95	0.95												
PHF Volume:	2	0	7	80	0	56	86	1022	2	17	929	49												
Reduct Vol:	0	0	0	0	0	0	0	0	0	0	0	0												
FinalVolume:	2	0	7	80	0	56	86	1022	2	17	929	49												
Critical Gap Module:																								
Critical Gp:	7.1	6.5	6.2	7.1	6.5	6.2	4.1	xxxx	xxxxx	4.1	xxxx	xxxxx												
FollowUpTim:	3.5	4.0	3.3	3.5	4.0	3.3	2.2	xxxx	xxxxx	2.2	xxxx	xxxxx												
Capacity Module:																								
Cnflict Vol:	2212	2208	1023	2187	2185	954	979	xxxx	xxxxx	1024	xxxx	xxxxx												
Potent Cap.:	32	45	289	33	46	316	713	xxxx	xxxxx	686	xxxx	xxxxx												
Move Cap.:	23	38	289	29	40	316	713	xxxx	xxxxx	686	xxxx	xxxxx												
Total Cap:	88	121	xxxxx	114	134	xxxxx	xxxx	xxxx	xxxxx	xxxx	xxxx	xxxxx												
Volume/Cap:	0.02	0.00	0.03	0.70	0.00	0.18	0.12	xxxx	xxxx	0.02	xxxx	xxxx												
Level Of Service Module:																								
2Way95thQ:	xxxx	xxxx	xxxxx	xxxx	xxxx	xxxxx	0.4	xxxx	xxxxx	0.1	xxxx	xxxxx												
Control Del:	xxxxx	xxxx	xxxxx	xxxxx	xxxx	xxxxx	10.7	xxxx	xxxxx	10.4	xxxx	xxxxx												
LOS by Move:	*	*	*	*	*	*	B	*	*	B	*	*												
Movement:	LT	-	LTR	-	RT		LT	-	LTR	-	RT		LT	-	LTR	-	RT		LT	-	LTR	-	RT	
Shared Cap.:	xxxx	191	xxxxx	xxxx	154	xxxxx	xxxx	xxxx	xxxxx	xxxx	xxxx	xxxxx												
SharedQueue:	xxxxx	0.2	xxxxx	xxxxx	6.1	xxxxx	xxxxx	xxxx	xxxxx	xxxxx	xxxx	xxxxx												
Shrd ConDel:	xxxxx	24.8	xxxxx	xxxxx	101	xxxxx	xxxxx	xxxx	xxxxx	xxxxx	xxxx	xxxxx												
Shared LOS:	*	C	*	*	F	*	*	*	*	*	*	*												
ApproachDel:	24.8			101.4			xxxxxx			xxxxxx														
ApproachLOS:	C			F			*			*														

Note: Queue reported is the number of cars per lane.

Church of the Woods
Year 2030 With Project Traffic Conditions
Saturday Peak Hour

Level Of Service Computation Report
2000 HCM Unsignalized Method (Base Volume Alternative)

Intersection #9 Project Access/State Route 18

Average Delay (sec/veh): 0.4 Worst Case Level Of Service: C[22.9]

Approach:	North Bound			South Bound			East Bound			West Bound		
Movement:	L	T	R	L	T	R	L	T	R	L	T	R
Control:	Stop Sign			Stop Sign			Uncontrolled			Uncontrolled		
Rights:	Include			Include			Include			Include		
Lanes:	0 0 0 0 0			1 0 0 0 1			1 0 1 0 0			0 0 1 0 1		
Volume Module:												
Base Vol:	0	0	0	20	0	11	10	1176	0	0	1011	18
Growth Adj:	1.00	1.00	1.00	1.00	1.00	1.00	1.00	1.00	1.00	1.00	1.00	1.00
Initial Bse:	0	0	0	20	0	11	10	1176	0	0	1011	18
User Adj:	1.00	1.00	1.00	1.00	1.00	1.00	1.00	1.00	1.00	1.00	1.00	1.00
PHF Adj:	0.95	0.95	0.95	0.95	0.95	0.95	0.95	0.95	0.95	0.95	0.95	0.95
PHF Volume:	0	0	0	21	0	12	11	1238	0	0	1064	19
Reduct Vol:	0	0	0	0	0	0	0	0	0	0	0	0
FinalVolume:	0	0	0	21	0	12	11	1238	0	0	1064	19
Critical Gap Module:												
Critical Gp:	xxxxx	xxxx	xxxxx	6.4	xxxx	6.2	4.1	xxxx	xxxxx	xxxxx	xxxx	xxxxx
FollowUpTim:	xxxxx	xxxx	xxxxx	3.5	xxxx	3.3	2.2	xxxx	xxxxx	xxxxx	xxxx	xxxxx
Capacity Module:												
Cnflict Vol:	xxxx	xxxx	xxxxx	2323	xxxx	1064	1083	xxxx	xxxxx	xxxx	xxxx	xxxxx
Potent Cap.:	xxxx	xxxx	xxxxx	42	xxxx	273	652	xxxx	xxxxx	xxxx	xxxx	xxxxx
Move Cap.:	xxxx	xxxx	xxxxx	41	xxxx	273	652	xxxx	xxxxx	xxxx	xxxx	xxxxx
Total Cap:	150	176	xxxxx	199	180	xxxxx	xxxx	xxxx	xxxxx	xxxx	xxxx	xxxxx
Volume/Cap:	xxxx	xxxx	xxxx	0.11	xxxx	0.04	0.02	xxxx	xxxx	xxxx	xxxx	xxxx
Level Of Service Module:												
2Way95thQ:	xxxx	xxxx	xxxxx	0.3	xxxx	0.1	0.0	xxxx	xxxxx	xxxx	xxxx	xxxxx
Control Del:	xxxxx	xxxx	xxxxx	25.2	xxxx	18.8	10.6	xxxx	xxxxx	xxxxx	xxxx	xxxxx
LOS by Move:	*	*	*	D	*	C	B	*	*	*	*	*
Movement:	LT	LTR	RT	LT	LTR	RT	LT	LTR	RT	LT	LTR	RT
Shared Cap.:	xxxx	xxxx	xxxxx	xxxx	xxxx	xxxxx	xxxx	xxxx	xxxxx	xxxx	xxxx	xxxxx
SharedQueue:	xxxxx	xxxx	xxxxx	xxxxx	xxxx	xxxxx	xxxxx	xxxx	xxxxx	xxxxx	xxxx	xxxxx
Shrd ConDel:	xxxxx	xxxx	xxxxx	xxxxx	xxxx	xxxxx	xxxxx	xxxx	xxxxx	xxxxx	xxxx	xxxxx
Shared LOS:	*	*	*	*	*	*	*	*	*	*	*	*
ApproachDel:	xxxxxx			22.9			xxxxxx			xxxxxx		
ApproachLOS:	*			C			*			*		

Note: Queue reported is the number of cars per lane.

Church of the Woods
Year 2030 With Project Traffic Conditions
Saturday Peak Hour

Level Of Service Computation Report
2000 HCM Unsignalized Method (Base Volume Alternative)

Intersection #10 Daley Canyon Road/State Route 18

Average Delay (sec/veh): 21.7 Worst Case Level Of Service: F[70.2]

Approach:	North Bound					South Bound					East Bound					West Bound				
Movement:	L	-	T	-	R	L	-	T	-	R	L	-	T	-	R	L	-	T	-	R
Control:	Stop Sign					Stop Sign					Uncontrolled					Uncontrolled				
Rights:	Include					Include					Include					Include				
Lanes:	0	0	0	0	0	0	0	0	0	1	1	0	1	0	0	0	0	1	0	0
Volume Module:																				
Base Vol:	0	0	0	0	0	588	576	620	0	0	441	0								
Growth Adj:	1.00	1.00	1.00	1.00	1.00	1.00	1.00	1.00	1.00	1.00	1.00	1.00								
Initial Bse:	0	0	0	0	0	588	576	620	0	0	441	0								
User Adj:	1.00	1.00	1.00	1.00	1.00	1.00	1.00	1.00	1.00	1.00	1.00	1.00								
PHF Adj:	0.95	0.95	0.95	0.95	0.95	0.95	0.95	0.95	0.95	0.95	0.95	0.95								
PHF Volume:	0	0	0	0	0	619	606	653	0	0	464	0								
Reduct Vol:	0	0	0	0	0	0	0	0	0	0	0	0								
FinalVolume:	0	0	0	0	0	619	606	653	0	0	464	0								
Critical Gap Module:																				
Critical Gp:	xxxxx	xxxx	xxxxx	xxxxx	xxxx	6.2	4.1	xxxx	xxxxx	xxxxx	xxxx	xxxxx								
FollowUpTim:	xxxxx	xxxx	xxxxx	xxxxx	xxxx	3.3	2.2	xxxx	xxxxx	xxxxx	xxxx	xxxxx								
Capacity Module:																				
Cnflict Vol:	xxxx	xxxx	xxxxx	xxxx	xxxx	464	464	xxxx	xxxxx	xxxx	xxxx	xxxxx								
Potent Cap.:	xxxx	xxxx	xxxxx	xxxx	xxxx	602	1108	xxxx	xxxxx	xxxx	xxxx	xxxxx								
Move Cap.:	xxxx	xxxx	xxxxx	xxxx	xxxx	602	1108	xxxx	xxxxx	xxxx	xxxx	xxxxx								
Volume/Cap:	xxxx	xxxx	xxxx	xxxx	xxxx	1.03	0.55	xxxx	xxxx	xxxx	xxxx	xxxx								
Level Of Service Module:																				
2Way95thQ:	xxxx	xxxx	xxxxx	xxxx	xxxx	16.3	3.4	xxxx	xxxxx	xxxx	xxxx	xxxxx								
Control Del:	xxxxx	xxxx	xxxxx	xxxxx	xxxx	70.2	12.1	xxxx	xxxxx	xxxxx	xxxx	xxxxx								
LOS by Move:	*	*	*	*	*	F	B	*	*	*	*	*								
Movement:	LT	-	LTR	-	RT	LT	-	LTR	-	RT	LT	-	LTR	-	RT	LT	-	LTR	-	RT
Shared Cap.:	xxxx	xxxx	xxxxx	xxxx	xxxx	xxxxx	xxxx	xxxx	xxxxx	xxxx	xxxx	xxxxx								
SharedQueue:	xxxxx	xxxx	xxxxx	xxxxx	xxxx	xxxxx	xxxxx	xxxx	xxxxx	xxxxx	xxxx	xxxxx								
Shrd ConDel:	xxxxx	xxxx	xxxxx	xxxxx	xxxx	xxxxx	xxxxx	xxxx	xxxxx	xxxxx	xxxx	xxxxx								
Shared LOS:	*	*	*	*	*	*	*	*	*	*	*	*								
ApproachDel:	xxxxxx			70.2			xxxxxx				xxxxxx									
ApproachLOS:	*			F			*				*									

Note: Queue reported is the number of cars per lane.

Church of the Woods
Year 2030 With Project Traffic Conditions
Saturday Peak Hour

Level Of Service Computation Report
2000 HCM Unsignalized Method (Base Volume Alternative)

Intersection #11 Daley Canyon Road/Daley Canyon Access Road

Average Delay (sec/veh): 5.1 Worst Case Level Of Service: C[21.5]

Approach:	North Bound			South Bound			East Bound			West Bound		
Movement:	L	T	R	L	T	R	L	T	R	L	T	R
Control:	Uncontrolled			Uncontrolled			Stop Sign			Stop Sign		
Rights:	Include			Include			Include			Include		
Lanes:	0 0 1	0	0	0 1	0 0	0	0 0 0	0	0	0 0 0	0	1
Volume Module:												
Base Vol:	0	576	0	280	588	0	0	0	0	0	0	274
Growth Adj:	1.00	1.00	1.00	1.00	1.00	1.00	1.00	1.00	1.00	1.00	1.00	1.00
Initial Bse:	0	576	0	280	588	0	0	0	0	0	0	274
User Adj:	1.00	1.00	1.00	1.00	1.00	1.00	1.00	1.00	1.00	1.00	1.00	1.00
PHF Adj:	0.95	0.95	0.95	0.95	0.95	0.95	0.95	0.95	0.95	0.95	0.95	0.95
PHF Volume:	0	606	0	295	619	0	0	0	0	0	0	288
Reduct Vol:	0	0	0	0	0	0	0	0	0	0	0	0
FinalVolume:	0	606	0	295	619	0	0	0	0	0	0	288
Critical Gap Module:												
Critical Gp:	xxxxx	xxxx	xxxxx	4.1	xxxx	xxxxx	xxxxx	xxxx	xxxxx	xxxxx	xxxx	6.2
FollowUpTim:	xxxxx	xxxx	xxxxx	2.2	xxxx	xxxxx	xxxxx	xxxx	xxxxx	xxxxx	xxxx	3.3
Capacity Module:												
Cnflict Vol:	xxxx	xxxx	xxxxx	606	xxxx	xxxxx	xxxx	xxxx	xxxxx	xxxx	xxxx	606
Potent Cap.:	xxxx	xxxx	xxxxx	982	xxxx	xxxxx	xxxx	xxxx	xxxxx	xxxx	xxxx	501
Move Cap.:	xxxx	xxxx	xxxxx	982	xxxx	xxxxx	xxxx	xxxx	xxxxx	xxxx	xxxx	501
Volume/Cap:	xxxx	xxxx	xxxx	0.30	xxxx	xxxx	xxxx	xxxx	xxxx	xxxx	xxxx	0.58
Level Of Service Module:												
2Way95thQ:	xxxx	xxxx	xxxxx	1.3	xxxx	xxxxx	xxxx	xxxx	xxxxx	xxxx	xxxx	3.6
Control Del:	xxxxx	xxxx	xxxxx	10.2	xxxx	xxxxx	xxxxx	xxxx	xxxxx	xxxxx	xxxx	21.5
LOS by Move:	*	*	*	B	*	*	*	*	*	*	*	C
Movement:	LT	LTR	RT	LT	LTR	RT	LT	LTR	RT	LT	LTR	RT
Shared Cap.:	xxxx	xxxx	xxxxx	xxxx	xxxx	xxxxx	xxxx	xxxx	xxxxx	xxxx	xxxx	xxxxx
SharedQueue:	xxxxx	xxxx	xxxxx	1.3	xxxx	xxxxx	xxxxx	xxxx	xxxxx	xxxxx	xxxx	xxxxx
Shrd ConDel:	xxxxx	xxxx	xxxxx	10.2	xxxx	xxxxx	xxxxx	xxxx	xxxxx	xxxxx	xxxx	xxxxx
Shared LOS:	*	*	*	B	*	*	*	*	*	*	*	*
ApproachDel:	xxxxxx			xxxxxx			xxxxxx			21.5		
ApproachLOS:	*			*			*			C		

Note: Queue reported is the number of cars per lane.

Church of the Woods
Year 2030 With Project Traffic Conditions
Saturday Peak Hour

Level Of Service Computation Report
2000 HCM Unsignalized Method (Base Volume Alternative)

Intersection #12 Daley Canyon Access Road/State Route 18

Average Delay (sec/veh): 33.7 Worst Case Level Of Service: F[194.6]

Approach:	North Bound			South Bound			East Bound			West Bound		
Movement:	L	T	R	L	T	R	L	T	R	L	T	R
Control:	Stop Sign			Stop Sign			Uncontrolled			Uncontrolled		
Rights:	Include			Include			Include			Include		
Lanes:	0 0 0 0 0			1 0 0 0 0			0 0 1 0 0			0 0 1 0 1		
Volume Module:												
Base Vol:	0	0	0	280	0	0	0	620	0	0	441	274
Growth Adj:	1.00	1.00	1.00	1.00	1.00	1.00	1.00	1.00	1.00	1.00	1.00	1.00
Initial Bse:	0	0	0	280	0	0	0	620	0	0	441	274
User Adj:	1.00	1.00	1.00	1.00	1.00	1.00	1.00	1.00	1.00	1.00	1.00	1.00
PHF Adj:	0.95	0.95	0.95	0.95	0.95	0.95	0.95	0.95	0.95	0.95	0.95	0.95
PHF Volume:	0	0	0	295	0	0	0	653	0	0	464	288
Reduct Vol:	0	0	0	0	0	0	0	0	0	0	0	0
FinalVolume:	0	0	0	295	0	0	0	653	0	0	464	288
Critical Gap Module:												
Critical Gp:	xxxxx	xxxx	xxxxx	6.4	xxxx	xxxxx	xxxxx	xxxx	xxxxx	xxxxx	xxxx	xxxxx
FollowUpTim:	xxxxx	xxxx	xxxxx	3.5	xxxx	xxxxx	xxxxx	xxxx	xxxxx	xxxxx	xxxx	xxxxx
Capacity Module:												
Cnflict Vol:	xxxx	xxxx	xxxxx	1117	xxxx	xxxxx	xxxx	xxxx	xxxxx	xxxx	xxxx	xxxxx
Potent Cap.:	xxxx	xxxx	xxxxx	232	xxxx	xxxxx	xxxx	xxxx	xxxxx	xxxx	xxxx	xxxxx
Move Cap.:	xxxx	xxxx	xxxxx	232	xxxx	xxxxx	xxxx	xxxx	xxxxx	xxxx	xxxx	xxxxx
Volume/Cap:	xxxx	xxxx	xxxx	1.27	xxxx	xxxx	xxxx	xxxx	xxxx	xxxx	xxxx	xxxx
Level Of Service Module:												
2Way95thQ:	xxxx	xxxx	xxxxx	15.2	xxxx	xxxxx	xxxx	xxxx	xxxxx	xxxx	xxxx	xxxxx
Control Del:	xxxxx	xxxx	xxxxx	194.6	xxxx	xxxxx	xxxxx	xxxx	xxxxx	xxxxx	xxxx	xxxxx
LOS by Move:	*	*	*	F	*	*	*	*	*	*	*	*
Movement:	LT	LTR	RT	LT	LTR	RT	LT	LTR	RT	LT	LTR	RT
Shared Cap.:	xxxx	xxxx	xxxxx	xxxx	xxxx	xxxxx	xxxx	xxxx	xxxxx	xxxx	xxxx	xxxxx
SharedQueue:	xxxxx	xxxx	xxxxx	xxxxx	xxxx	xxxxx	xxxxx	xxxx	xxxxx	xxxxx	xxxx	xxxxx
Shrd ConDel:	xxxxx	xxxx	xxxxx	xxxxx	xxxx	xxxxx	xxxxx	xxxx	xxxxx	xxxxx	xxxx	xxxxx
Shared LOS:	*	*	*	*	*	*	*	*	*	*	*	*
ApproachDel:	xxxxxx			194.6			xxxxxx			xxxxxx		
ApproachLOS:	*			F			*			*		

Note: Queue reported is the number of cars per lane.

Church of the Woods
Year 2030 With Project Traffic Conditions
Saturday Peak Hour

Level Of Service Computation Report
2000 HCM Unsignalized Method (Base Volume Alternative)

Intersection #13 State Route 173/State Route 18

Average Delay (sec/veh): 201.2 Worst Case Level Of Service: F[847.4]

Approach:	North Bound			South Bound			East Bound			West Bound		
Movement:	L	T	R	L	T	R	L	T	R	L	T	R
Control:	Stop Sign			Stop Sign			Uncontrolled			Uncontrolled		
Rights:	Include			Include			Include			Include		
Lanes:	0 0 0 0 0			0 0 1! 0 0			1 0 1 0 0			0 0 1 0 1		
Volume Module:												
Base Vol:	0	0	0	150	0	257	442	395	0	0	336	159
Growth Adj:	1.00	1.00	1.00	1.00	1.00	1.00	1.00	1.00	1.00	1.00	1.00	1.00
Initial Bse:	0	0	0	150	0	257	442	395	0	0	336	159
User Adj:	1.00	1.00	1.00	1.00	1.00	1.00	1.00	1.00	1.00	1.00	1.00	1.00
PHF Adj:	0.95	0.95	0.95	0.95	0.95	0.95	0.95	0.95	0.95	0.95	0.95	0.95
PHF Volume:	0	0	0	158	0	271	465	416	0	0	354	167
Reduct Vol:	0	0	0	0	0	0	0	0	0	0	0	0
FinalVolume:	0	0	0	158	0	271	465	416	0	0	354	167
Critical Gap Module:												
Critical Gp:	xxxxx	xxxx	xxxxx	6.4	6.5	6.2	4.1	xxxx	xxxxx	xxxxx	xxxx	xxxxx
FollowUpTim:	xxxxx	xxxx	xxxxx	3.5	4.0	3.3	2.2	xxxx	xxxxx	xxxxx	xxxx	xxxxx
Capacity Module:												
Cnflict Vol:	xxxx	xxxx	xxxxx	1700	1700	354	521	xxxx	xxxxx	xxxx	xxxx	xxxxx
Potent Cap.:	xxxx	xxxx	xxxxx	102	93	695	1056	xxxx	xxxxx	xxxx	xxxx	xxxxx
Move Cap.:	xxxx	xxxx	xxxxx	67	52	695	1056	xxxx	xxxxx	xxxx	xxxx	xxxxx
Volume/Cap:	xxxx	xxxx	xxxx	2.35	0.00	0.39	0.44	xxxx	xxxx	xxxx	xxxx	xxxx
Level Of Service Module:												
2Way95thQ:	xxxx	xxxx	xxxxx	xxxx	xxxx	xxxxx	2.3	xxxx	xxxxx	xxxx	xxxx	xxxxx
Control Del:	xxxxx	xxxx	xxxxx	xxxxx	xxxx	xxxxx	11.1	xxxx	xxxxx	xxxxx	xxxx	xxxxx
LOS by Move:	*	*	*	*	*	*	B	*	*	*	*	*
Movement:	LT	LTR	RT	LT	LTR	RT	LT	LTR	RT	LT	LTR	RT
Shared Cap.:	xxxx	xxxx	xxxxx	xxxx	156	xxxxx	xxxx	xxxx	xxxxx	xxxx	xxxx	xxxxx
SharedQueue:	xxxxx	xxxx	xxxxx	xxxxx	38.2	xxxxx	xxxxx	xxxx	xxxxx	xxxxx	xxxx	xxxxx
Shrd ConDel:	xxxxx	xxxx	xxxxx	xxxxx	847	xxxxx	xxxxx	xxxx	xxxxx	xxxxx	xxxx	xxxxx
Shared LOS:	*	*	*	*	F	*	*	*	*	*	*	*
ApproachDel:	xxxxxx			847.4			xxxxxx			xxxxxx		
ApproachLOS:	*			F			*			*		

Note: Queue reported is the number of cars per lane.

```
------------------------------------------------------------------------------
                              Church of the Woods
                     Year 2030 With Project Traffic Conditions
                               Sunday Peak Hour
------------------------------------------------------------------------------
                       Level Of Service Computation Report
             2000 HCM Unsignalized Method (Base Volume Alternative)
******************************************************************************
Intersection #1 North Road/State Route 189
******************************************************************************
Average Delay (sec/veh):      6.6       Worst Case Level Of Service: C[ 17.6]
******************************************************************************
Approach:      North Bound      South Bound       East Bound       West Bound
Movement:     L  -  T  -  R    L  -  T  -  R    L  -  T  -  R    L  -  T  -  R
------------|---------------||---------------||---------------||---------------|
Control:        Stop Sign        Stop Sign       Uncontrolled     Uncontrolled
Rights:           Include          Include          Include          Include
Lanes:        0  0  0  0  0    0  0  1! 0  0    0  1  0  0  0    0  0  0  1  0
------------|---------------||---------------||---------------||---------------|
Volume Module:
Base Vol:       0    0     0   174    0    88    62  105     0     0  195   153
Growth Adj:  1.00 1.00  1.00  1.00 1.00  1.00  1.00 1.00  1.00  1.00 1.00  1.00
Initial Bse:    0    0     0   174    0    88    62  105     0     0  195   153
User Adj:    1.00 1.00  1.00  1.00 1.00  1.00  1.00 1.00  1.00  1.00 1.00  1.00
PHF Adj:     0.95 0.95  0.95  0.95 0.95  0.95  0.95 0.95  0.95  0.95 0.95  0.95
PHF Volume:     0    0     0   183    0    93    65  111     0     0  205   161
Reduct Vol:     0    0     0     0    0     0     0    0     0     0    0     0
FinalVolume:    0    0     0   183    0    93    65  111     0     0  205   161
------------|---------------||---------------||---------------||---------------|
Critical Gap Module:
Critical Gp:xxxxx xxxx xxxxx   6.4  6.5   6.2   4.1 xxxx xxxxx xxxxx xxxx xxxxx
FollowUpTim:xxxxx xxxx xxxxx   3.5  4.0   3.3   2.2 xxxx xxxxx xxxxx xxxx xxxxx
------------|---------------||---------------||---------------||---------------|
Capacity Module:
Cnflict Vol: xxxx xxxx xxxxx   527  527   286   366 xxxx xxxxx  xxxx xxxx xxxxx
Potent Cap.: xxxx xxxx xxxxx   515  459   758  1203 xxxx xxxxx  xxxx xxxx xxxxx
Move Cap.:   xxxx xxxx xxxxx   493  433   758  1203 xxxx xxxxx  xxxx xxxx xxxxx
Volume/Cap:  xxxx xxxx  xxxx  0.37 0.00  0.12  0.05 xxxx  xxxx  xxxx xxxx  xxxx
------------|---------------||---------------||---------------||---------------|
Level Of Service Module:
2Way95thQ:   xxxx xxxx xxxxx  xxxx xxxx xxxxx   0.2 xxxx xxxxx  xxxx xxxx xxxxx
Control Del:xxxxx xxxx xxxxx xxxxx xxxx xxxxx   8.2 xxxx xxxxx xxxxx xxxx xxxxx
LOS by Move:   *    *     *     *    *     *     A    *     *     *    *     *
Movement:     LT - LTR - RT    LT - LTR - RT    LT - LTR - RT    LT - LTR - RT
Shared Cap.: xxxx xxxx xxxxx  xxxx  559 xxxxx  xxxx xxxx xxxxx  xxxx xxxx xxxxx
SharedQueue:xxxxx xxxx xxxxx xxxxx  2.7 xxxxx   0.2 xxxx xxxxx xxxxx xxxx xxxxx
Shrd ConDel:xxxxx xxxx xxxxx xxxxx 17.6 xxxxx   8.2 xxxx xxxxx xxxxx xxxx xxxxx
Shared LOS:    *    *     *     *    C     *     A    *     *     *    *     *
ApproachDel:    xxxxxx             17.6           xxxxxx           xxxxxx
ApproachLOS:        *               C                *                *
******************************************************************************
Note: Queue reported is the number of cars per lane.
******************************************************************************
```

Church of the Woods
Year 2030 With Project Traffic Conditions
Sunday Peak Hour

Level Of Service Computation Report
2000 HCM Unsignalized Method (Base Volume Alternative)

Intersection #2 Bear Springs Road/State Route 189

Average Delay (sec/veh): 6.5 Worst Case Level Of Service: C[20.2]

Approach:	North Bound						South Bound						East Bound						West Bound					
Movement:	L	-	T	-	R		L	-	T	-	R		L	-	T	-	R		L	-	T	-	R	
Control:	Stop Sign						Stop Sign						Uncontrolled						Uncontrolled					
Rights:	Include						Include						Include						Include					
Lanes:	0	0	1!	0	0		0	0	1!	0	0		0	0	1!	0	0		0	0	1!	0	0	
Volume Module:																								
Base Vol:	39	30		15			58	23		99			71	189		54			19	237		32		
Growth Adj:	1.00	1.00		1.00			1.00	1.00		1.00			1.00	1.00		1.00			1.00	1.00		1.00		
Initial Bse:	39	30		15			58	23		99			71	189		54			19	237		32		
User Adj:	1.00	1.00		1.00			1.00	1.00		1.00			1.00	1.00		1.00			1.00	1.00		1.00		
PHF Adj:	0.95	0.95		0.95			0.95	0.95		0.95			0.95	0.95		0.95			0.95	0.95		0.95		
PHF Volume:	41	32		16			61	24		104			75	199		57			20	249		34		
Reduct Vol:	0	0		0			0	0		0			0	0		0			0	0		0		
FinalVolume:	41	32		16			61	24		104			75	199		57			20	249		34		
Critical Gap Module:																								
Critical Gp:	7.1	6.5		6.2			7.1	6.5		6.2			4.1	xxxx	xxxxx				4.1	xxxx	xxxxx			
FollowUpTim:	3.5	4.0		3.3			3.5	4.0		3.3			2.2	xxxx	xxxxx				2.2	xxxx	xxxxx			
Capacity Module:																								
Cnflict Vol:	747	700		227			707	712		266			283	xxxx	xxxxx				256	xxxx	xxxxx			
Potent Cap.:	331	366		817			353	360		777			1291	xxxx	xxxxx				1321	xxxx	xxxxx			
Move Cap.:	256	339		817			303	333		777			1291	xxxx	xxxxx				1321	xxxx	xxxxx			
Volume/Cap:	0.16	0.09		0.02			0.20	0.07		0.13			0.06	xxxx	xxxx				0.02	xxxx	xxxx			
Level Of Service Module:																								
2Way95thQ:	xxxx	xxxx		xxxxx			xxxx	xxxx		xxxxx			0.2	xxxx	xxxxx				0.0	xxxx	xxxxx			
Control Del:	xxxxx	xxxx		xxxxx			xxxxx	xxxx		xxxxx			8.0	xxxx	xxxxx				7.8	xxxx	xxxxx			
LOS by Move:	*	*		*			*	*		*			A	*	*				A	*	*			
Movement:	LT	-	LTR	-	RT		LT	-	LTR	-	RT		LT	-	LTR	-	RT		LT	-	LTR	-	RT	
Shared Cap.:	xxxx		324	xxxxx			xxxx		464	xxxxx			xxxx	xxxx	xxxxx				xxxx	xxxx	xxxxx			
SharedQueue:	xxxxx		1.1	xxxxx			xxxxx		2.0	xxxxx			xxxxx	xxxx	xxxxx				xxxxx	xxxx	xxxxx			
Shrd ConDel:	xxxxx		20.2	xxxxx			xxxxx		18.0	xxxxx			xxxxx	xxxx	xxxxx				xxxxx	xxxx	xxxxx			
Shared LOS:	*		C	*			*		C	*			*	*	*				*	*	*			
ApproachDel:			20.2						18.0					xxxxxx						xxxxxx				
ApproachLOS:			C						C					*						*				

Note: Queue reported is the number of cars per lane.

Church of the Woods
Year 2030 With Project Traffic Conditions
Sunday Peak Hour

Level Of Service Computation Report
2000 HCM Unsignalized Method (Base Volume Alternative)

Intersection #3 Grass Valley Road/State Route 189

Average Delay (sec/veh): 156.1 Worst Case Level Of Service: F[273.4]

Approach:	North Bound			South Bound			East Bound			West Bound		
Movement:	L	T	R	L	T	R	L	T	R	L	T	R
Control:	Stop Sign			Stop Sign			Uncontrolled			Uncontrolled		
Rights:	Include			Include			Include			Include		
Lanes:	0 0 0 0 0			0 0 1! 0 0			1 0 1 0 0			0 0 0 1 0		
Volume Module:												
Base Vol:	0	0	0	546	0	283	115	204	0	0	69	241
Growth Adj:	1.00	1.00	1.00	1.00	1.00	1.00	1.00	1.00	1.00	1.00	1.00	1.00
Initial Bse:	0	0	0	546	0	283	115	204	0	0	69	241
User Adj:	1.00	1.00	1.00	1.00	1.00	1.00	1.00	1.00	1.00	1.00	1.00	1.00
PHF Adj:	0.95	0.95	0.95	0.95	0.95	0.95	0.95	0.95	0.95	0.95	0.95	0.95
PHF Volume:	0	0	0	575	0	298	121	215	0	0	73	254
Reduct Vol:	0	0	0	0	0	0	0	0	0	0	0	0
FinalVolume:	0	0	0	575	0	298	121	215	0	0	73	254
Critical Gap Module:												
Critical Gp:	xxxxx	xxxx	xxxxx	6.4	6.5	6.2	4.1	xxxx	xxxxx	xxxxx	xxxx	xxxxx
FollowUpTim:	xxxxx	xxxx	xxxxx	3.5	4.0	3.3	2.2	xxxx	xxxxx	xxxxx	xxxx	xxxxx
Capacity Module:												
Cnflict Vol:	xxxx	xxxx	xxxxx	656	656	199	326	xxxx	xxxxx	xxxx	xxxx	xxxxx
Potent Cap.:	xxxx	xxxx	xxxxx	433	388	847	1245	xxxx	xxxxx	xxxx	xxxx	xxxxx
Move Cap.:	xxxx	xxxx	xxxxx	401	350	847	1245	xxxx	xxxxx	xxxx	xxxx	xxxxx
Total Cap:	254	374	xxxxx	482	425	xxxxx	xxxx	xxxx	xxxxx	xxxx	xxxx	xxxxx
Volume/Cap:	xxxx	xxxx	xxxx	1.19	0.00	0.35	0.10	xxxx	xxxx	xxxx	xxxx	xxxx
Level Of Service Module:												
2Way95thQ:	xxxx	xxxx	xxxxx	xxxx	xxxx	xxxxx	0.3	xxxx	xxxxx	xxxx	xxxx	xxxxx
Control Del:	xxxxx	xxxx	xxxxx	xxxxx	xxxx	xxxxx	8.2	xxxx	xxxxx	xxxxx	xxxx	xxxxx
LOS by Move:	*	*	*	*	*	*	A	*	*	*	*	*
Movement:	LT	LTR	RT	LT	LTR	RT	LT	LTR	RT	LT	LTR	RT
Shared Cap.:	xxxx	xxxx	xxxxx	xxxx	565	xxxxx	xxxx	xxxx	xxxxx	xxxx	xxxx	xxxxx
SharedQueue:	xxxxx	xxxx	xxxxx	xxxxx	45.6	xxxxx	xxxxx	xxxx	xxxxx	xxxxx	xxxx	xxxxx
Shrd ConDel:	xxxxx	xxxx	xxxxx	xxxxx	273	xxxxx	xxxxx	xxxx	xxxxx	xxxxx	xxxx	xxxxx
Shared LOS:	*	*	*	*	F	*	*	*	*	*	*	*
ApproachDel:	xxxxxx			273.4			xxxxxx			xxxxxx		
ApproachLOS:	*			F			*			*		

Note: Queue reported is the number of cars per lane.

Church of the Woods
Year 2030 With Project Traffic Conditions
Sunday Peak Hour

Level Of Service Computation Report
2000 HCM 4-Way Stop Method (Base Volume Alternative)

Intersection #4 Daley Canyon Road/State Route 189

Cycle (sec): 100 Critical Vol./Cap.(X): 1.339
Loss Time (sec): 0 (Y+R=4.0 sec) Average Delay (sec/veh): 159.0
Optimal Cycle: 0 Level Of Service: F

Approach:	North Bound				South Bound				East Bound				West Bound			
Movement:	L	- T	- R		L	- T	- R		L	- T	- R		L	- T	- R	
Control:	Stop Sign				Stop Sign				Stop Sign				Stop Sign			
Rights:	Include				Include				Include				Include			
Min. Green:	10	10	10		10	10	10		10	10	10		10	10	10	
Lanes:	0 1	0 0	0		0 0	0 1	0		0 0	1! 0	0		0 0	0 0	0	
Volume Module:																
Base Vol:	244	372	0	0	565	51	240	0	472	0	0	0				
Growth Adj:	1.00	1.00	1.00	1.00	1.00	1.00	1.00	1.00	1.00	1.00	1.00	1.00				
Initial Bse:	244	372	0	0	565	51	240	0	472	0	0	0				
User Adj:	1.00	1.00	1.00	1.00	1.00	1.00	1.00	1.00	1.00	1.00	1.00	1.00				
PHF Adj:	0.95	0.95	0.95	0.95	0.95	0.95	0.95	0.95	0.95	0.95	0.95	0.95				
PHF Volume:	257	392	0	0	595	54	253	0	497	0	0	0				
Reduct Vol:	0	0	0	0	0	0	0	0	0	0	0	0				
Reduced Vol:	257	392	0	0	595	54	253	0	497	0	0	0				
PCE Adj:	1.00	1.00	1.00	1.00	1.00	1.00	1.00	1.00	1.00	1.00	1.00	1.00				
MLF Adj:	1.00	1.00	1.00	1.00	1.00	1.00	1.00	1.00	1.00	1.00	1.00	1.00				
FinalVolume:	257	392	0	0	595	54	253	0	497	0	0	0				
Saturation Flow Module:																
Adjustment:	1.00	1.00	1.00	1.00	1.00	1.00	1.00	1.00	1.00	1.00	1.00	1.00				
Lanes:	0.40	0.60	0.00	0.00	0.92	0.08	0.34	0.00	0.66	0.00	0.00	0.00				
Final Sat.:	206	314	0	0	486	44	189	0	371	0	0	0				
Capacity Analysis Module:																
Vol/Sat:	1.25	1.25	xxxx	xxxx	1.22	1.22	1.34	xxxx	1.34	xxxx	xxxx	xxxx				
Crit Moves:	****				****		****									
Delay/Veh:	149.4	149	0.0	0.0	140	139.7	184.1	0.0	184.1	0.0	0.0	0.0				
Delay Adj:	1.00	1.00	1.00	1.00	1.00	1.00	1.00	1.00	1.00	1.00	1.00	1.00				
AdjDel/Veh:	149.4	149	0.0	0.0	140	139.7	184.1	0.0	184.1	0.0	0.0	0.0				
LOS by Move:	F	F	*	*	F	F	F	*	F	*	*	*				
ApproachDel:	149.4				139.7				184.1				xxxxxx			
Delay Adj:	1.00				1.00				1.00				xxxxx			
ApprAdjDel:	149.4				139.7				184.1				xxxxxx			
LOS by Appr:	F				F				F				*			
AllWayAvgQ:	20.1	20.1	20.1	19.1	19.1	19.1	27.2	27.2	27.2	0.0	0.0	0.0				

Note: Queue reported is the number of cars per lane.

Church of the Woods
Year 2030 With Project Traffic Conditions
Sunday Peak Hour

Level Of Service Computation Report
2000 HCM 4-Way Stop Method (Base Volume Alternative)

Intersection #5 North Bay Road/State Route 189

Cycle (sec):	100	Critical Vol./Cap.(X):	0.880
Loss Time (sec):	0 (Y+R=4.0 sec)	Average Delay (sec/veh):	32.0
Optimal Cycle:	0	Level Of Service:	D

Approach:	North Bound			South Bound			East Bound			West Bound		
Movement:	L -	T -	R	L -	T -	R	L -	T -	R	L -	T -	R
Control:	Stop Sign			Stop Sign			Stop Sign			Stop Sign		
Rights:	Include			Include			Include			Include		
Min. Green:	10	10	10	10	10	10	10	10	10	10	10	10
Lanes:	0 0	0 0	0	1 0	0 0	1	1 0	1 0	0	0 0	0 1	0
Volume Module:												
Base Vol:	0	0	0	126	0	450	333	313	0	0	306	138
Growth Adj:	1.00	1.00	1.00	1.00	1.00	1.00	1.00	1.00	1.00	1.00	1.00	1.00
Initial Bse:	0	0	0	126	0	450	333	313	0	0	306	138
User Adj:	1.00	1.00	1.00	1.00	1.00	1.00	1.00	1.00	1.00	1.00	1.00	1.00
PHF Adj:	0.95	0.95	0.95	0.95	0.95	0.95	0.95	0.95	0.95	0.95	0.95	0.95
PHF Volume:	0	0	0	133	0	474	351	329	0	0	322	145
Reduct Vol:	0	0	0	0	0	0	0	0	0	0	0	0
Reduced Vol:	0	0	0	133	0	474	351	329	0	0	322	145
PCE Adj:	1.00	1.00	1.00	1.00	1.00	1.00	1.00	1.00	1.00	1.00	1.00	1.00
MLF Adj:	1.00	1.00	1.00	1.00	1.00	1.00	1.00	1.00	1.00	1.00	1.00	1.00
FinalVolume:	0	0	0	133	0	474	351	329	0	0	322	145
Saturation Flow Module:												
Adjustment:	1.00	1.00	1.00	1.00	1.00	1.00	1.00	1.00	1.00	1.00	1.00	1.00
Lanes:	0.00	0.00	0.00	1.00	0.00	1.00	1.00	1.00	0.00	0.00	0.69	0.31
Final Sat.:	0	0	0	462	0	545	468	500	0	0	366	165
Capacity Analysis Module:												
Vol/Sat:	xxxx	xxxx	xxxx	0.29	xxxx	0.87	0.75	0.66	xxxx	xxxx	0.88	0.88
Crit Moves:						****	****				****	
Delay/Veh:	0.0	0.0	0.0	13.5	0.0	37.5	29.4	22.3	0.0	0.0	40.6	40.6
Delay Adj:	1.00	1.00	1.00	1.00	1.00	1.00	1.00	1.00	1.00	1.00	1.00	1.00
AdjDel/Veh:	0.0	0.0	0.0	13.5	0.0	37.5	29.4	22.3	0.0	0.0	40.6	40.6
LOS by Move:	*	*	*	B	*	E	D	C	*	*	E	E
ApproachDel:	xxxxxx			32.2			25.9			40.6		
Delay Adj:	xxxxx			1.00			1.00			1.00		
ApprAdjDel:	xxxxxx			32.2			25.9			40.6		
LOS by Appr:	*			D			D			E		
AllWayAvgQ:	0.0	0.0	0.0	0.4	0.0	4.3	2.5	1.7	0.0	4.6	4.6	4.6

Note: Queue reported is the number of cars per lane.

Church of the Woods
Year 2030 With Project Traffic Conditions
Sunday Peak Hour

Level Of Service Computation Report
2000 HCM Unsignalized Method (Base Volume Alternative)

Intersection #6 Lake Gregory Road/State Route 189

Average Delay (sec/veh): 9.4 Worst Case Level Of Service: D[25.9]

Approach:	North Bound					South Bound					East Bound					West Bound				
Movement:	L	-	T	-	R	L	-	T	-	R	L	-	T	-	R	L	-	T	-	R
Control:	Uncontrolled					Uncontrolled					Stop Sign					Stop Sign				
Rights:	Include					Include					Include					Include				
Lanes:	0	0	0	1	0	0	1	0	0	0	0	0	0	0	0	0	0	1!	0	0
Volume Module:																				
Base Vol:	0	213		51		84	241		0		0		0		0	198		0		96
Growth Adj:	1.00	1.00		1.00		1.00	1.00		1.00		1.00		1.00		1.00	1.00		1.00		1.00
Initial Bse:	0	213		51		84	241		0		0		0		0	198		0		96
User Adj:	1.00	1.00		1.00		1.00	1.00		1.00		1.00		1.00		1.00	1.00		1.00		1.00
PHF Adj:	0.95	0.95		0.95		0.95	0.95		0.95		0.95		0.95		0.95	0.95		0.95		0.95
PHF Volume:	0	224		54		88	254		0		0		0		0	208		0		101
Reduct Vol:	0	0		0		0	0		0		0		0		0	0		0		0
FinalVolume:	0	224		54		88	254		0		0		0		0	208		0		101
Critical Gap Module:																				
Critical Gp:	xxxxx	xxxx		xxxxx		4.1	xxxx		xxxxx		xxxxx		xxxx		xxxxx	6.4		6.5		6.2
FollowUpTim:	xxxxx	xxxx		xxxxx		2.2	xxxx		xxxxx		xxxxx		xxxx		xxxxx	3.5		4.0		3.3
Capacity Module:																				
Cnflict Vol:	xxxx	xxxx		xxxxx		278	xxxx		xxxxx		xxxx		xxxx		xxxxx	682		682		251
Potent Cap.:	xxxx	xxxx		xxxxx		1297	xxxx		xxxxx		xxxx		xxxx		xxxxx	419		375		793
Move Cap.:	xxxx	xxxx		xxxxx		1297	xxxx		xxxxx		xxxx		xxxx		xxxxx	396		348		793
Volume/Cap:	xxxx	xxxx		xxxx		0.07	xxxx		xxxx		xxxx		xxxx		xxxx	0.53		0.00		0.13
Level Of Service Module:																				
2Way95thQ:	xxxx	xxxx		xxxxx		0.2	xxxx		xxxxx		xxxx		xxxx		xxxxx	xxxx		xxxx		xxxxx
Control Del:	xxxxx	xxxx		xxxxx		8.0	xxxx		xxxxx		xxxxx		xxxx		xxxxx	xxxxx		xxxx		xxxxx
LOS by Move:	*	*		*		A	*		*		*		*		*	*		*		*
Movement:	LT	-	LTR	-	RT	LT	-	LTR	-	RT	LT	-	LTR	-	RT	LT	-	LTR	-	RT
Shared Cap.:	xxxx	xxxx		xxxxx		xxxx	xxxx		xxxxx		xxxx		xxxx		xxxxx	xxxx		473		xxxxx
SharedQueue:	xxxxx	xxxx		xxxxx		0.2	xxxx		xxxxx		xxxxx		xxxx		xxxxx	xxxxx		4.6		xxxxx
Shrd ConDel:	xxxxx	xxxx		xxxxx		8.0	xxxx		xxxxx		xxxxx		xxxx		xxxxx	xxxxx		25.9		xxxxx
Shared LOS:	*	*		*		A	*		*		*		*		*	*		D		*
ApproachDel:	xxxxxx					xxxxxx					xxxxxx					25.9				
ApproachLOS:	*					*					*					D				

Note: Queue reported is the number of cars per lane.

Church of the Woods
Year 2030 With Project Traffic Conditions
Sunday Peak Hour

Level Of Service Computation Report
2000 HCM Unsignalized Method (Base Volume Alternative)

Intersection #7 Lake Gregory Drive/State Route 18

Average Delay (sec/veh): 6.9 Worst Case Level Of Service: D[25.8]

Approach:	North Bound			South Bound			East Bound			West Bound		
Movement:	L	T	R	L	T	R	L	T	R	L	T	R
Control:	Stop Sign			Stop Sign			Uncontrolled			Uncontrolled		
Rights:	Include			Include			Include			Include		
Lanes:	0 0 0 0 0			1 0 0 0 1			1 0 1 0 0			0 0 1 0 1		
Volume Module:												
Base Vol:	0	0	0	239	0	199	71	369	0	0	659	193
Growth Adj:	1.00	1.00	1.00	1.00	1.00	1.00	1.00	1.00	1.00	1.00	1.00	1.00
Initial Bse:	0	0	0	239	0	199	71	369	0	0	659	193
User Adj:	1.00	1.00	1.00	1.00	1.00	1.00	1.00	1.00	1.00	1.00	1.00	1.00
PHF Adj:	0.95	0.95	0.95	0.95	0.95	0.95	0.95	0.95	0.95	0.95	0.95	0.95
PHF Volume:	0	0	0	252	0	209	75	388	0	0	694	203
Reduct Vol:	0	0	0	0	0	0	0	0	0	0	0	0
FinalVolume:	0	0	0	252	0	209	75	388	0	0	694	203
Critical Gap Module:												
Critical Gp:	xxxxx	xxxx	xxxxx	6.4	xxxx	6.2	4.1	xxxx	xxxxx	xxxxx	xxxx	xxxxx
FollowUpTim:	xxxxx	xxxx	xxxxx	3.5	xxxx	3.3	2.2	xxxx	xxxxx	xxxxx	xxxx	xxxxx
Capacity Module:												
Cnflict Vol:	xxxx	xxxx	xxxxx	1232	xxxx	694	897	xxxx	xxxxx	xxxx	xxxx	xxxxx
Potent Cap.:	xxxx	xxxx	xxxxx	198	xxxx	446	765	xxxx	xxxxx	xxxx	xxxx	xxxxx
Move Cap.:	xxxx	xxxx	xxxxx	183	xxxx	446	765	xxxx	xxxxx	xxxx	xxxx	xxxxx
Total Cap:	98	252	xxxxx	383	342	xxxxx	xxxx	xxxx	xxxxx	xxxx	xxxx	xxxxx
Volume/Cap:	xxxx	xxxx	xxxx	0.66	xxxx	0.47	0.10	xxxx	xxxx	xxxx	xxxx	xxxx
Level Of Service Module:												
2Way95thQ:	xxxx	xxxx	xxxxx	4.5	xxxx	2.4	0.3	xxxx	xxxxx	xxxx	xxxx	xxxxx
Control Del:	xxxxx	xxxx	xxxxx	30.6	xxxx	20.0	10.2	xxxx	xxxxx	xxxxx	xxxx	xxxxx
LOS by Move:	*	*	*	D	*	C	B	*	*	*	*	*
Movement:	LT	LTR	RT	LT	LTR	RT	LT	LTR	RT	LT	LTR	RT
Shared Cap.:	xxxx	xxxx	xxxxx	xxxx	xxxx	xxxxx	xxxx	xxxx	xxxxx	xxxx	xxxx	xxxxx
SharedQueue:	xxxxx	xxxx	xxxxx	xxxxx	xxxx	xxxxx	xxxxx	xxxx	xxxxx	xxxxx	xxxx	xxxxx
Shrd ConDel:	xxxxx	xxxx	xxxxx	xxxxx	xxxx	xxxxx	xxxxx	xxxx	xxxxx	xxxxx	xxxx	xxxxx
Shared LOS:	*	*	*	*	*	*	*	*	*	*	*	*
ApproachDel:	xxxxxx			25.8			xxxxxx			xxxxxx		
ApproachLOS:	*			D			*			*		

Note: Queue reported is the number of cars per lane.

Church of the Woods
Year 2030 With Project Traffic Conditions
Sunday Peak Hour

Level Of Service Computation Report
2000 HCM Unsignalized Method (Base Volume Alternative)

Intersection #8 Bear Springs Road/State Route 18

Average Delay (sec/veh): 3.4 Worst Case Level Of Service: E[41.2]

Approach:	North Bound			South Bound			East Bound			West Bound		
Movement:	L - T - R			L - T - R			L - T - R			L - T - R		
Control:	Stop Sign			Stop Sign			Uncontrolled			Uncontrolled		
Rights:	Include			Include			Include			Include		
Lanes:	0 0 1! 0 0			0 0 1! 0 0			1 0 0 1 0			1 0 0 1 0		
Volume Module:												
Base Vol:	27	0	27	63	7	34	29	743	23	18	788	65
Growth Adj:	1.00	1.00	1.00	1.00	1.00	1.00	1.00	1.00	1.00	1.00	1.00	1.00
Initial Bse:	27	0	27	63	7	34	29	743	23	18	788	65
User Adj:	1.00	1.00	1.00	1.00	1.00	1.00	1.00	1.00	1.00	1.00	1.00	1.00
PHF Adj:	0.95	0.95	0.95	0.95	0.95	0.95	0.95	0.95	0.95	0.95	0.95	0.95
PHF Volume:	28	0	28	66	7	36	31	782	24	19	829	68
Reduct Vol:	0	0	0	0	0	0	0	0	0	0	0	0
FinalVolume:	28	0	28	66	7	36	31	782	24	19	829	68
Critical Gap Module:												
Critical Gp:	7.1	6.5	6.2	7.1	6.5	6.2	4.1	xxxx	xxxxx	4.1	xxxx	xxxxx
FollowUpTim:	3.5	4.0	3.3	3.5	4.0	3.3	2.2	xxxx	xxxxx	2.2	xxxx	xxxxx
Capacity Module:												
Cnflict Vol:	1778	1791	794	1771	1769	864	898	xxxx	xxxxx	806	xxxx	xxxxx
Potent Cap.:	65	82	391	66	84	357	765	xxxx	xxxxx	827	xxxx	xxxxx
Move Cap.:	52	77	391	58	79	357	765	xxxx	xxxxx	827	xxxx	xxxxx
Total Cap:	155	187	xxxxx	167	194	xxxxx	xxxx	xxxx	xxxxx	xxxx	xxxx	xxxxx
Volume/Cap:	0.18	0.00	0.07	0.40	0.04	0.10	0.04	xxxx	xxxx	0.02	xxxx	xxxx
Level Of Service Module:												
2Way95thQ:	xxxx	xxxx	xxxxx	xxxx	xxxx	xxxxx	0.1	xxxx	xxxxx	0.1	xxxx	xxxxx
Control Del:	xxxxx	xxxx	xxxxx	xxxxx	xxxx	xxxxx	9.9	xxxx	xxxxx	9.5	xxxx	xxxxx
LOS by Move:	*	*	*	*	*	*	A	*	*	A	*	*
Movement:	LT - LTR - RT			LT - LTR - RT			LT - LTR - RT			LT - LTR - RT		
Shared Cap.:	xxxx	222	xxxxx	xxxx	205	xxxxx	xxxx	xxxx	xxxxx	xxxx	xxxx	xxxxx
SharedQueue:	xxxxx	1.0	xxxxx	xxxxx	2.8	xxxxx	xxxxx	xxxx	xxxxx	xxxxx	xxxx	xxxxx
Shrd ConDel:	xxxxx	26.8	xxxxx	xxxxx	41.2	xxxxx	xxxxx	xxxx	xxxxx	xxxxx	xxxx	xxxxx
Shared LOS:	*	D	*	*	E	*	*	*	*	*	*	*
ApproachDel:	26.8			41.2			xxxxxx			xxxxxx		
ApproachLOS:	D			E			*			*		

Note: Queue reported is the number of cars per lane.

Church of the Woods
Year 2030 With Project Traffic Conditions
Sunday Peak Hour

Level Of Service Computation Report
2000 HCM Unsignalized Method (Base Volume Alternative)

Intersection #9 Project Access/State Route 18

Average Delay (sec/veh): 26.8 Worst Case Level Of Service: F[158.2]

Approach:	North Bound			South Bound			East Bound			West Bound		
Movement:	L	T	R	L	T	R	L	T	R	L	T	R
Control:	Stop Sign			Stop Sign			Uncontrolled			Uncontrolled		
Rights:	Include			Include			Include			Include		
Lanes:	0 0 0 0 0			1 0 0 0 1			1 0 1 0 0			0 0 1 0 1		
Volume Module:												
Base Vol:	0	0	0	260	0	140	140	672	0	0	961	260
Growth Adj:	1.00	1.00	1.00	1.00	1.00	1.00	1.00	1.00	1.00	1.00	1.00	1.00
Initial Bse:	0	0	0	260	0	140	140	672	0	0	961	260
User Adj:	1.00	1.00	1.00	1.00	1.00	1.00	1.00	1.00	1.00	1.00	1.00	1.00
PHF Adj:	0.95	0.95	0.95	0.95	0.95	0.95	0.95	0.95	0.95	0.95	0.95	0.95
PHF Volume:	0	0	0	274	0	147	147	707	0	0	1012	274
Reduct Vol:	0	0	0	0	0	0	0	0	0	0	0	0
FinalVolume:	0	0	0	274	0	147	147	707	0	0	1012	274
Critical Gap Module:												
Critical Gp:	xxxxx	xxxx	xxxxx	6.4	xxxx	6.2	4.1	xxxx	xxxxx	xxxxx	xxxx	xxxxx
FollowUpTim:	xxxxx	xxxx	xxxxx	3.5	xxxx	3.3	2.2	xxxx	xxxxx	xxxxx	xxxx	xxxxx
Capacity Module:												
Cnflict Vol:	xxxx	xxxx	xxxxx	2014	xxxx	1012	1285	xxxx	xxxxx	xxxx	xxxx	xxxxx
Potent Cap.:	xxxx	xxxx	xxxxx	65	xxxx	293	547	xxxx	xxxxx	xxxx	xxxx	xxxxx
Move Cap.:	xxxx	xxxx	xxxxx	52	xxxx	293	547	xxxx	xxxxx	xxxx	xxxx	xxxxx
Total Cap:	0	82	xxxxx	204	183	xxxxx	xxxx	xxxx	xxxxx	xxxx	xxxx	xxxxx
Volume/Cap:	xxxx	xxxx	xxxx	1.34	xxxx	0.50	0.27	xxxx	xxxx	xxxx	xxxx	xxxx
Level Of Service Module:												
2Way95thQ:	xxxx	xxxx	xxxxx	15.4	xxxx	2.6	1.1	xxxx	xxxxx	xxxx	xxxx	xxxxx
Control Del:	xxxxx	xxxx	xxxxx	227.7	xxxx	29.1	14.0	xxxx	xxxxx	xxxxx	xxxx	xxxxx
LOS by Move:	*	*	*	F	*	D	B	*	*	*	*	*
Movement:	LT	LTR	RT	LT	LTR	RT	LT	LTR	RT	LT	LTR	RT
Shared Cap.:	xxxx	xxxx	xxxxx	xxxx	xxxx	xxxxx	xxxx	xxxx	xxxxx	xxxx	xxxx	xxxxx
SharedQueue:	xxxxx	xxxx	xxxxx	xxxxx	xxxx	xxxxx	xxxxx	xxxx	xxxxx	xxxxx	xxxx	xxxxx
Shrd ConDel:	xxxxx	xxxx	xxxxx	xxxxx	xxxx	xxxxx	xxxxx	xxxx	xxxxx	xxxxx	xxxx	xxxxx
Shared LOS:	*	*	*	*	*	*	*	*	*	*	*	*
ApproachDel:	xxxxxx			158.2			xxxxxx			xxxxxx		
ApproachLOS:	*			F			*			*		

Note: Queue reported is the number of cars per lane.

Church of the Woods
Year 2030 With Project Traffic Conditions
Sunday Peak Hour

Level Of Service Computation Report
2000 HCM Unsignalized Method (Base Volume Alternative)

Intersection #10 Daley Canyon Road/State Route 18

Average Delay (sec/veh): 70.1 Worst Case Level Of Service: F[197.2]

Approach:	North Bound					South Bound					East Bound					West Bound				
Movement:	L	-	T	-	R	L	-	T	-	R	L	-	T	-	R	L	-	T	-	R
Control:	Stop Sign					Stop Sign					Uncontrolled					Uncontrolled				
Rights:	Include					Include					Include					Include				
Lanes:	0	0	0	0	0	0	0	0	0	1	1	0	1	0	0	0	0	1	0	0
Volume Module:																				
Base Vol:	0	0	0	0	0	0	0	0	0	737	487	445	0	0	0	0	0	484	0	0
Growth Adj:	1.00	1.00	1.00	1.00	1.00	1.00	1.00	1.00	1.00	1.00	1.00	1.00	1.00	1.00	1.00	1.00	1.00	1.00	1.00	1.00
Initial Bse:	0	0	0	0	0	0	0	0	0	737	487	445	0	0	0	0	0	484	0	0
User Adj:	1.00	1.00	1.00	1.00	1.00	1.00	1.00	1.00	1.00	1.00	1.00	1.00	1.00	1.00	1.00	1.00	1.00	1.00	1.00	1.00
PHF Adj:	0.95	0.95	0.95	0.95	0.95	0.95	0.95	0.95	0.95	0.95	0.95	0.95	0.95	0.95	0.95	0.95	0.95	0.95	0.95	0.95
PHF Volume:	0	0	0	0	0	0	0	0	0	776	513	468	0	0	0	0	0	509	0	0
Reduct Vol:	0	0	0	0	0	0	0	0	0	0	0	0	0	0	0	0	0	0	0	0
FinalVolume:	0	0	0	0	0	0	0	0	0	776	513	468	0	0	0	0	0	509	0	0
Critical Gap Module:																				
Critical Gp:	xxxxx	xxxx	xxxxx	xxxxx	xxxx					6.2		4.1	xxxx	xxxxx	xxxxx	xxxx	xxxxx			
FollowUpTim:	xxxxx	xxxx	xxxxx	xxxxx	xxxx					3.3		2.2	xxxx	xxxxx	xxxxx	xxxx	xxxxx			
Capacity Module:																				
Cnflict Vol:	xxxx	xxxx	xxxxx	xxxx	xxxx					509		509	xxxx	xxxxx	xxxx	xxxx	xxxxx			
Potent Cap.:	xxxx	xxxx	xxxxx	xxxx	xxxx					568		1066	xxxx	xxxxx	xxxx	xxxx	xxxxx			
Move Cap.:	xxxx	xxxx	xxxxx	xxxx	xxxx					568		1066	xxxx	xxxxx	xxxx	xxxx	xxxxx			
Volume/Cap:	xxxx	xxxx	xxxx	xxxx	xxxx					1.37		0.48	xxxx	xxxx	xxxx	xxxx	xxxx			
Level Of Service Module:																				
2Way95thQ:	xxxx	xxxx	xxxxx	xxxx	xxxx					34.4		2.7	xxxx	xxxxx	xxxx	xxxx	xxxxx			
Control Del:	xxxxx	xxxx	xxxxx	xxxxx	xxxx					197.2		11.5	xxxx	xxxxx	xxxxx	xxxx	xxxxx			
LOS by Move:	*	*	*	*	*					F		B	*	*	*	*	*			
Movement:	LT	-	LTR	-	RT	LT	-	LTR	-	RT	LT	-	LTR	-	RT	LT	-	LTR	-	RT
Shared Cap.:	xxxx	xxxx	xxxxx	xxxx	xxxx	xxxxx					xxxx	xxxx	xxxxx	xxxx	xxxx	xxxxx				
SharedQueue:	xxxxx	xxxx	xxxxx	xxxxx	xxxx	xxxxx					xxxxx	xxxx	xxxxx	xxxxx	xxxx	xxxxx				
Shrd ConDel:	xxxxx	xxxx	xxxxx	xxxxx	xxxx	xxxxx					xxxxx	xxxx	xxxxx	xxxxx	xxxx	xxxxx				
Shared LOS:	*	*	*	*	*	*					*	*	*	*	*	*				
ApproachDel:	xxxxxx					197.2					xxxxxx					xxxxxx				
ApproachLOS:	*					F					*					*				

Note: Queue reported is the number of cars per lane.

Church of the Woods
Year 2030 With Project Traffic Conditions
Sunday Peak Hour

Level Of Service Computation Report
2000 HCM Unsignalized Method (Base Volume Alternative)

Intersection #11 Daley Canyon Road/Daley Canyon Access Road

Average Delay (sec/veh): 4.0 Worst Case Level Of Service: C[16.7]

Approach:	North Bound			South Bound			East Bound			West Bound		
Movement:	L	T	R	L	T	R	L	T	R	L	T	R
Control:	Uncontrolled			Uncontrolled			Stop Sign			Stop Sign		
Rights:	Include			Include			Include			Include		
Lanes:	0 0 1	0	0	0 1	0 0	0	0 0 0	0	0	0 0 0	0	1
Volume Module:												
Base Vol:	0	487	0	307	737	0	0	0	0	0	0	249
Growth Adj:	1.00	1.00	1.00	1.00	1.00	1.00	1.00	1.00	1.00	1.00	1.00	1.00
Initial Bse:	0	487	0	307	737	0	0	0	0	0	0	249
User Adj:	1.00	1.00	1.00	1.00	1.00	1.00	1.00	1.00	1.00	1.00	1.00	1.00
PHF Adj:	0.95	0.95	0.95	0.95	0.95	0.95	0.95	0.95	0.95	0.95	0.95	0.95
PHF Volume:	0	513	0	323	776	0	0	0	0	0	0	262
Reduct Vol:	0	0	0	0	0	0	0	0	0	0	0	0
FinalVolume:	0	513	0	323	776	0	0	0	0	0	0	262
Critical Gap Module:												
Critical Gp:	xxxxx	xxxx	xxxxx	4.1	xxxx	xxxxx	xxxxx	xxxx	xxxxx	xxxxx	xxxx	6.2
FollowUpTim:	xxxxx	xxxx	xxxxx	2.2	xxxx	xxxxx	xxxxx	xxxx	xxxxx	xxxxx	xxxx	3.3
Capacity Module:												
Cnflict Vol:	xxxx	xxxx	xxxxx	513	xxxx	xxxxx	xxxx	xxxx	xxxxx	xxxx	xxxx	513
Potent Cap.:	xxxx	xxxx	xxxxx	1063	xxxx	xxxxx	xxxx	xxxx	xxxxx	xxxx	xxxx	565
Move Cap.:	xxxx	xxxx	xxxxx	1063	xxxx	xxxxx	xxxx	xxxx	xxxxx	xxxx	xxxx	565
Volume/Cap:	xxxx	xxxx	xxxx	0.30	xxxx	xxxx	xxxx	xxxx	xxxx	xxxx	xxxx	0.46
Level Of Service Module:												
2Way95thQ:	xxxx	xxxx	xxxxx	1.3	xxxx	xxxxx	xxxx	xxxx	xxxxx	xxxx	xxxx	2.4
Control Del:	xxxxx	xxxx	xxxxx	9.9	xxxx	xxxxx	xxxxx	xxxx	xxxxx	xxxxx	xxxx	16.7
LOS by Move:	*	*	*	A	*	*	*	*	*	*	*	C
Movement:	LT	LTR	RT	LT	LTR	RT	LT	LTR	RT	LT	LTR	RT
Shared Cap.:	xxxx	xxxx	xxxxx	xxxx	xxxx	xxxxx	xxxx	xxxx	xxxxx	xxxx	xxxx	xxxxx
SharedQueue:	xxxxx	xxxx	xxxxx	1.3	xxxx	xxxxx	xxxxx	xxxx	xxxxx	xxxxx	xxxx	xxxxx
Shrd ConDel:	xxxxx	xxxx	xxxxx	9.9	xxxx	xxxxx	xxxxx	xxxx	xxxxx	xxxxx	xxxx	xxxxx
Shared LOS:	*	*	*	A	*	*	*	*	*	*	*	*
ApproachDel:	xxxxxx			xxxxxx			xxxxxx			16.7		
ApproachLOS:	*			*			*			C		

Note: Queue reported is the number of cars per lane.

Church of the Woods
Year 2030 With Project Traffic Conditions
Sunday Peak Hour

Level Of Service Computation Report
2000 HCM Unsignalized Method (Base Volume Alternative)

Intersection #12 Daley Canyon Access Road/State Route 18

Average Delay (sec/veh): 29.2 Worst Case Level Of Service: F[141.0]

Approach:	North Bound			South Bound			East Bound			West Bound		
Movement:	L - T - R			L - T - R			L - T - R			L - T - R		
Control:	Stop Sign			Stop Sign			Uncontrolled			Uncontrolled		
Rights:	Include			Include			Include			Include		
Lanes:	0 0 0 0 0			1 0 0 0 0			0 0 1 0 0			0 0 1 0 1		
Volume Module:												
Base Vol:	0	0	0	307	0	0	0	445	0	0	484	249
Growth Adj:	1.00	1.00	1.00	1.00	1.00	1.00	1.00	1.00	1.00	1.00	1.00	1.00
Initial Bse:	0	0	0	307	0	0	0	445	0	0	484	249
User Adj:	1.00	1.00	1.00	1.00	1.00	1.00	1.00	1.00	1.00	1.00	1.00	1.00
PHF Adj:	0.95	0.95	0.95	0.95	0.95	0.95	0.95	0.95	0.95	0.95	0.95	0.95
PHF Volume:	0	0	0	323	0	0	0	468	0	0	509	262
Reduct Vol:	0	0	0	0	0	0	0	0	0	0	0	0
FinalVolume:	0	0	0	323	0	0	0	468	0	0	509	262
Critical Gap Module:												
Critical Gp:	xxxxx	xxxx	xxxxx	6.4	xxxx	xxxxx	xxxxx	xxxx	xxxxx	xxxxx	xxxx	xxxxx
FollowUpTim:	xxxxx	xxxx	xxxxx	3.5	xxxx	xxxxx	xxxxx	xxxx	xxxxx	xxxxx	xxxx	xxxxx
Capacity Module:												
Cnflict Vol:	xxxx	xxxx	xxxxx	978	xxxx	xxxxx	xxxx	xxxx	xxxxx	xxxx	xxxx	xxxxx
Potent Cap.:	xxxx	xxxx	xxxxx	280	xxxx	xxxxx	xxxx	xxxx	xxxxx	xxxx	xxxx	xxxxx
Move Cap.:	xxxx	xxxx	xxxxx	280	xxxx	xxxxx	xxxx	xxxx	xxxxx	xxxx	xxxx	xxxxx
Volume/Cap:	xxxx	xxxx	xxxx	1.15	xxxx	xxxx	xxxx	xxxx	xxxx	xxxx	xxxx	xxxx
Level Of Service Module:												
2Way95thQ:	xxxx	xxxx	xxxxx	14.0	xxxx	xxxxx	xxxx	xxxx	xxxxx	xxxx	xxxx	xxxxx
Control Del:	xxxxx	xxxx	xxxxx	141.0	xxxx	xxxxx	xxxxx	xxxx	xxxxx	xxxxx	xxxx	xxxxx
LOS by Move:	*	*	*	F	*	*	*	*	*	*	*	*
Movement:	LT - LTR - RT			LT - LTR - RT			LT - LTR - RT			LT - LTR - RT		
Shared Cap.:	xxxx	xxxx	xxxxx	xxxx	xxxx	xxxxx	xxxx	xxxx	xxxxx	xxxx	xxxx	xxxxx
SharedQueue:	xxxxx	xxxx	xxxxx	xxxxx	xxxx	xxxxx	xxxxx	xxxx	xxxxx	xxxxx	xxxx	xxxxx
Shrd ConDel:	xxxxx	xxxx	xxxxx	xxxxx	xxxx	xxxxx	xxxxx	xxxx	xxxxx	xxxxx	xxxx	xxxxx
Shared LOS:	*	*	*	*	*	*	*	*	*	*	*	*
ApproachDel:	xxxxxx			141.0			xxxxxx			xxxxxx		
ApproachLOS:	*			F			*			*		

Note: Queue reported is the number of cars per lane.

Church of the Woods
Year 2030 With Project Traffic Conditions
Sunday Peak Hour

Level Of Service Computation Report
2000 HCM Unsignalized Method (Base Volume Alternative)

Intersection #13 State Route 173/State Route 18

Average Delay (sec/veh): 46.0 Worst Case Level Of Service: F[168.7]

Approach:	North Bound			South Bound			East Bound			West Bound		
Movement:	L	T	R	L	T	R	L	T	R	L	T	R
Control:	Stop Sign			Stop Sign			Uncontrolled			Uncontrolled		
Rights:	Include			Include			Include			Include		
Lanes:	0 0 0 0 0			0 0 1! 0 0			1 0 1 0 0			0 0 1 0 1		
Volume Module:												
Base Vol:	0	0	0	80	0	304	442	235	0	0	242	207
Growth Adj:	1.00	1.00	1.00	1.00	1.00	1.00	1.00	1.00	1.00	1.00	1.00	1.00
Initial Bse:	0	0	0	80	0	304	442	235	0	0	242	207
User Adj:	1.00	1.00	1.00	1.00	1.00	1.00	1.00	1.00	1.00	1.00	1.00	1.00
PHF Adj:	0.95	0.95	0.95	0.95	0.95	0.95	0.95	0.95	0.95	0.95	0.95	0.95
PHF Volume:	0	0	0	84	0	320	465	247	0	0	255	218
Reduct Vol:	0	0	0	0	0	0	0	0	0	0	0	0
FinalVolume:	0	0	0	84	0	320	465	247	0	0	255	218
Critical Gap Module:												
Critical Gp:	xxxxx	xxxx	xxxxx	6.4	6.5	6.2	4.1	xxxx	xxxxx	xxxxx	xxxx	xxxxx
FollowUpTim:	xxxxx	xxxx	xxxxx	3.5	4.0	3.3	2.2	xxxx	xxxxx	xxxxx	xxxx	xxxxx
Capacity Module:												
Cnflict Vol:	xxxx	xxxx	xxxxx	1433	1433	255	473	xxxx	xxxxx	xxxx	xxxx	xxxxx
Potent Cap.:	xxxx	xxxx	xxxxx	149	135	789	1100	xxxx	xxxxx	xxxx	xxxx	xxxxx
Move Cap.:	xxxx	xxxx	xxxxx	100	78	789	1100	xxxx	xxxxx	xxxx	xxxx	xxxxx
Volume/Cap:	xxxx	xxxx	xxxx	0.84	0.00	0.41	0.42	xxxx	xxxx	xxxx	xxxx	xxxx
Level Of Service Module:												
2Way95thQ:	xxxx	xxxx	xxxxx	xxxx	xxxx	xxxxx	2.1	xxxx	xxxxx	xxxx	xxxx	xxxxx
Control Del:	xxxxx	xxxx	xxxxx	xxxxx	xxxx	xxxxx	10.7	xxxx	xxxxx	xxxxx	xxxx	xxxxx
LOS by Move:	*	*	*	*	*	*	B	*	*	*	*	*
Movement:	LT	LTR	RT	LT	LTR	RT	LT	LTR	RT	LT	LTR	RT
Shared Cap.:	xxxx	xxxx	xxxxx	xxxx	324	xxxxx	xxxx	xxxx	xxxxx	xxxx	xxxx	xxxxx
SharedQueue:	xxxxx	xxxx	xxxxx	xxxxx	18.3	xxxxx	xxxxx	xxxx	xxxxx	xxxxx	xxxx	xxxxx
Shrd ConDel:	xxxxx	xxxx	xxxxx	xxxxx	169	xxxxx	xxxxx	xxxx	xxxxx	xxxxx	xxxx	xxxxx
Shared LOS:	*	*	*	*	F	*	*	*	*	*	*	*
ApproachDel:	xxxxxx			168.7			xxxxxx			xxxxxx		
ApproachLOS:	*			F			*			*		

Note: Queue reported is the number of cars per lane.

OPENING YEAR (2009) WITH PROJECT WITH IMPROVEMENTS CONDITIONS

Movement	EBL	EBT	WBT	WBR	SBL	SBR
Lane Configurations						
Ideal Flow (vphpl)	1700	1800	1800	1800	1800	1800
Total Lost time (s)	4.0	4.0	4.0		4.0	
Lane Util. Factor	1.00	1.00	1.00		1.00	
Frt	1.00	1.00	0.91		0.94	
Flt Protected	0.95	1.00	1.00		0.97	
Satd. Flow (prot)	1615	1800	1633		1652	
Flt Permitted	0.95	1.00	1.00		0.97	
Satd. Flow (perm)	1615	1800	1633		1652	
Volume (vph)	122	211	86	190	363	250
Peak-hour factor, PHF	0.89	0.89	0.88	0.88	0.90	0.90
Adj. Flow (vph)	137	237	98	216	403	278
RTOR Reduction (vph)	0	0	127	0	43	0
Lane Group Flow (vph)	137	237	187	0	638	0
Turn Type	Prot					
Protected Phases	7	4	8		6	
Permitted Phases						
Actuated Green, G (s)	7.3	22.0	10.7		23.9	
Effective Green, g (s)	7.3	22.0	10.7		23.9	
Actuated g/C Ratio	0.14	0.41	0.20		0.44	
Clearance Time (s)	4.0	4.0	4.0		4.0	
Vehicle Extension (s)	3.0	3.0	3.0		3.0	
Lane Grp Cap (vph)	219	735	324		733	
v/s Ratio Prot	c0.08	0.13	c0.11		c0.39	
v/s Ratio Perm						
v/c Ratio	0.63	0.32	0.58		0.87	
Uniform Delay, d1	22.0	10.9	19.5		13.6	
Progression Factor	1.00	1.00	1.00		1.00	
Incremental Delay, d2	5.5	0.3	2.5		10.8	
Delay (s)	27.5	11.1	22.0		24.3	
Level of Service	C	B	C		C	
Approach Delay (s)		17.1	22.0		24.3	
Approach LOS		B	C		C	

Intersection Summary			
HCM Average Control Delay	21.8	HCM Level of Service	C
HCM Volume to Capacity ratio	0.75		
Actuated Cycle Length (s)	53.9	Sum of lost time (s)	12.0
Intersection Capacity Utilization	72.8%	ICU Level of Service	C
Analysis Period (min)	15		
c Critical Lane Group			

Church of the Woods
Opening Year (2009) With Project Traffic Conditions
Saturday Peak Hour With Improvements

Level Of Service Computation Report
2000 HCM 4-Way Stop Method (Base Volume Alternative)

Intersection #4 Daley Canyon Road/State Route 189

Cycle (sec): 100 Critical Vol./Cap.(X): 0.752
Loss Time (sec): 0 (Y+R=4.0 sec) Average Delay (sec/veh): 23.0
Optimal Cycle: 0 Level Of Service: C

Approach:	North Bound				South Bound				East Bound				West Bound			
Movement:	L -	T -	R		L -	T -	R		L -	T -	R		L -	T -	R	
Control:	Stop Sign				Stop Sign				Stop Sign				Stop Sign			
Rights:	Include				Include				Include				Include			
Min. Green:	10	10	10		10	10	10		10	10	10		10	10	10	
Lanes:	1 0	1 0	0		0 0	0 1	0		1 0	0 0	1		0 0	0 0	0	
Volume Module:																
Base Vol:	195	348	0		0	260	76		313	0	287		0	0	0	
Growth Adj:	1.00	1.00	1.00		1.00	1.00	1.00		1.00	1.00	1.00		1.00	1.00	1.00	
Initial Bse:	195	348	0		0	260	76		313	0	287		0	0	0	
User Adj:	1.00	1.00	1.00		1.00	1.00	1.00		1.00	1.00	1.00		1.00	1.00	1.00	
PHF Adj:	0.91	0.91	0.91		0.90	0.90	0.90		0.89	0.89	0.89		1.00	1.00	1.00	
PHF Volume:	215	385	0		0	288	84		350	0	321		0	0	0	
Reduct Vol:	0	0	0		0	0	0		0	0	0		0	0	0	
Reduced Vol:	215	385	0		0	288	84		350	0	321		0	0	0	
PCE Adj:	1.00	1.00	1.00		1.00	1.00	1.00		1.00	1.00	1.00		1.00	1.00	1.00	
MLF Adj:	1.00	1.00	1.00		1.00	1.00	1.00		1.00	1.00	1.00		1.00	1.00	1.00	
FinalVolume:	215	385	0		0	288	84		350	0	321		0	0	0	
Saturation Flow Module:																
Adjustment:	1.00	1.00	1.00		1.00	1.00	1.00		1.00	1.00	1.00		1.00	1.00	1.00	
Lanes:	1.00	1.00	0.00		0.00	0.77	0.23		1.00	0.00	1.00		0.00	0.00	0.00	
Final Sat.:	476	511	0		0	412	120		478	0	566		0	0	0	
Capacity Analysis Module:																
Vol/Sat:	0.45	0.75	xxxx		xxxx	0.70	0.70		0.73	xxxx	0.57		xxxx	xxxx	xxxx	
Crit Moves:		****				****			****							
Delay/Veh:	16.1	27.5	0.0		0.0	23.5	23.5		27.5	0.0	16.7		0.0	0.0	0.0	
Delay Adj:	1.00	1.00	1.00		1.00	1.00	1.00		1.00	1.00	1.00		1.00	1.00	1.00	
AdjDel/Veh:	16.1	27.5	0.0		0.0	23.5	23.5		27.5	0.0	16.7		0.0	0.0	0.0	
LOS by Move:	C	D	*		*	C	C		D	*	C		*	*	*	
ApproachDel:		23.4				23.5				22.3				xxxxxx		
Delay Adj:		1.00				1.00				1.00				xxxxx		
ApprAdjDel:		23.4				23.5				22.3				xxxxxx		
LOS by Appr:		C				C				C				*		
AllWayAvgQ:	0.8	2.5	0.0		2.0	2.0	2.0		2.3	0.0	1.2		0.0	0.0	0.0	

Note: Queue reported is the number of cars per lane.

Movement	WBL	WBR	NBT	NBR	SBL	SBT
Lane Configurations						
Ideal Flow (vphpl)	1700	1800	1700	1800	1700	1800
Grade (%)	-5%		-5%			0%
Total Lost time (s)	4.0		4.0		4.0	4.0
Lane Util. Factor	1.00		1.00		1.00	1.00
Frt	0.93		0.97		1.00	1.00
Flt Protected	0.98		1.00		0.95	1.00
Satd. Flow (prot)	1580		1685		1615	1800
Flt Permitted	0.98		1.00		0.57	1.00
Satd. Flow (perm)	1580		1685		968	1800
Volume (vph)	73	84	206	67	103	278
Peak-hour factor, PHF	0.77	0.77	0.87	0.87	0.79	0.79
Adj. Flow (vph)	95	109	237	77	130	352
RTOR Reduction (vph)	93	0	10	0	0	0
Lane Group Flow (vph)	111	0	304	0	130	352
Turn Type					Perm	
Protected Phases	8		2			6
Permitted Phases					6	
Actuated Green, G (s)	8.9		43.1		43.1	43.1
Effective Green, g (s)	8.9		43.1		43.1	43.1
Actuated g/C Ratio	0.15		0.72		0.72	0.72
Clearance Time (s)	4.0		4.0		4.0	4.0
Vehicle Extension (s)	3.0		3.0		3.0	3.0
Lane Grp Cap (vph)	234		1210		695	1293
v/s Ratio Prot	c0.07		0.18			c0.20
v/s Ratio Perm					0.13	
v/c Ratio	0.48		0.25		0.19	0.27
Uniform Delay, d1	23.4		2.9		2.7	3.0
Progression Factor	1.00		0.81		1.00	1.00
Incremental Delay, d2	1.5		0.5		0.6	0.5
Delay (s)	24.9		2.8		3.3	3.5
Level of Service	C		A		A	A
Approach Delay (s)	24.9		2.8			3.4
Approach LOS	C		A			A

Intersection Summary			
HCM Average Control Delay	7.6	HCM Level of Service	A
HCM Volume to Capacity ratio	0.31		
Actuated Cycle Length (s)	60.0	Sum of lost time (s)	8.0
Intersection Capacity Utilization	45.3%	ICU Level of Service	A
Analysis Period (min)	15		

c Critical Lane Group

Movement	EBL	EBT	WBT	WBR	SBL	SBR
Lane Configurations						
Ideal Flow (vphpl)	1700	1800	1800	1700	1700	1700
Grade (%)		0%	-2%		5%	
Total Lost time (s)	4.0	4.0	4.0	4.0	4.0	4.0
Lane Util. Factor	1.00	1.00	1.00	1.00	1.00	1.00
Frt	1.00	1.00	1.00	0.85	1.00	0.85
Flt Protected	0.95	1.00	1.00	1.00	0.95	1.00
Satd. Flow (prot)	1615	1800	1818	1459	1575	1409
Flt Permitted	0.95	1.00	1.00	1.00	0.95	1.00
Satd. Flow (perm)	1615	1800	1818	1459	1575	1409
Volume (vph)	116	450	460	157	260	92
Peak-hour factor, PHF	0.94	0.94	0.89	0.89	0.89	0.89
Adj. Flow (vph)	123	479	517	176	292	103
RTOR Reduction (vph)	0	0	0	99	0	79
Lane Group Flow (vph)	123	479	517	77	292	24
Turn Type	Prot			Perm		Perm
Protected Phases	5	2	6		4	
Permitted Phases				6		4
Actuated Green, G (s)	8.0	38.1	26.1	26.1	13.9	13.9
Effective Green, g (s)	8.0	38.1	26.1	26.1	13.9	13.9
Actuated g/C Ratio	0.13	0.64	0.44	0.44	0.23	0.23
Clearance Time (s)	4.0	4.0	4.0	4.0	4.0	4.0
Vehicle Extension (s)	3.0	3.0	3.0	3.0	3.0	3.0
Lane Grp Cap (vph)	215	1143	791	635	365	326
v/s Ratio Prot	c0.08	0.27	c0.28		c0.19	
v/s Ratio Perm				0.05		0.02
v/c Ratio	0.57	0.42	0.65	0.12	0.80	0.07
Uniform Delay, d1	24.4	5.4	13.4	10.1	21.7	18.0
Progression Factor	1.00	1.00	1.00	1.00	0.86	0.63
Incremental Delay, d2	3.6	1.1	4.2	0.4	11.5	0.1
Delay (s)	28.0	6.6	17.6	10.5	30.0	11.5
Level of Service	C	A	B	B	C	B
Approach Delay (s)		11.0	15.8		25.2	
Approach LOS		B	B		C	

Intersection Summary			
HCM Average Control Delay	16.3	HCM Level of Service	B
HCM Volume to Capacity ratio	0.68		
Actuated Cycle Length (s)	60.0	Sum of lost time (s)	12.0
Intersection Capacity Utilization	60.0%	ICU Level of Service	B
Analysis Period (min)	15		

c Critical Lane Group

Movement	EBL	EBT	WBT	WBR	SBL	SBR
Lane Configurations						
Ideal Flow (vphpl)	1700	1800	1800	1800	1800	1700
Total Lost time (s)	4.0	4.0	4.0			4.0
Lane Util. Factor	1.00	1.00	1.00			1.00
Frt	1.00	1.00	1.00			0.86
Flt Protected	0.95	1.00	1.00			1.00
Satd. Flow (prot)	1615	1800	1800			1470
Flt Permitted	0.95	1.00	1.00			1.00
Satd. Flow (perm)	1615	1800	1800			1470
Volume (vph)	358	486	346	0	0	387
Peak-hour factor, PHF	0.94	0.94	0.90	1.00	1.00	0.93
Adj. Flow (vph)	381	517	384	0	0	416
RTOR Reduction (vph)	0	0	0	0	0	167
Lane Group Flow (vph)	381	517	384	0	0	249
Turn Type	Prot					Over
Protected Phases	5	2	6			5
Permitted Phases						
Actuated Green, G (s)	28.0	60.0	24.0			28.0
Effective Green, g (s)	28.0	60.0	24.0			28.0
Actuated g/C Ratio	0.47	1.00	0.40			0.47
Clearance Time (s)	4.0	4.0	4.0			4.0
Vehicle Extension (s)	3.0	3.0	3.0			3.0
Lane Grp Cap (vph)	754	1800	720			686
v/s Ratio Prot	c0.24	0.29	c0.21			0.17
v/s Ratio Perm						
v/c Ratio	0.51	0.29	0.53			0.36
Uniform Delay, d1	11.2	0.0	13.7			10.3
Progression Factor	1.00	1.00	0.65			1.00
Incremental Delay, d2	0.5	0.4	2.7			0.3
Delay (s)	11.7	0.4	11.6			10.6
Level of Service	B	A	B			B
Approach Delay (s)		5.2	11.6		10.6	
Approach LOS		A	B		B	

Intersection Summary			
HCM Average Control Delay	8.0	HCM Level of Service	A
HCM Volume to Capacity ratio	0.52		
Actuated Cycle Length (s)	60.0	Sum of lost time (s)	8.0
Intersection Capacity Utilization	52.7%	ICU Level of Service	A
Analysis Period (min)	15		
c Critical Lane Group			

Movement	WBL	WBR	NBT	NBR	SBL	SBT
Lane Configurations						
Sign Control	Stop		Free			Free
Grade	0%		0%			0%
Volume (veh/h)	0	165	358	0	171	387
Peak Hour Factor	1.00	0.88	0.94	1.00	0.79	0.94
Hourly flow rate (vph)	0	188	381	0	216	412
Pedestrians						
Lane Width (ft)						
Walking Speed (ft/s)						
Percent Blockage						
Right turn flare (veh)						
Median type	None					
Median storage veh)						
Upstream signal (ft)			158			
pX, platoon unblocked						
vC, conflicting volume	1225	381			381	
vC1, stage 1 conf vol						
vC2, stage 2 conf vol						
vCu, unblocked vol	1225	381			381	
tC, single (s)	6.4	6.2			4.1	
tC, 2 stage (s)						
tF (s)	3.5	3.3			2.2	
p0 queue free %	100	72			82	
cM capacity (veh/h)	163	671			1189	

Direction, Lane #	WB 1	NB 1	SB 1	SB 2
Volume Total	188	381	216	412
Volume Left	0	0	216	0
Volume Right	188	0	0	0
cSH	671	1700	1189	1700
Volume to Capacity	0.28	0.22	0.18	0.24
Queue Length 95th (ft)	29	0	17	0
Control Delay (s)	12.4	0.0	8.7	0.0
Lane LOS	B		A	
Approach Delay (s)	12.4	0.0	3.0	
Approach LOS	B			

Intersection Summary			
Average Delay	3.5		
Intersection Capacity Utilization	37.3%	ICU Level of Service	A
Analysis Period (min)	15		

Movement	EBL	EBT	WBT	WBR	SBL	SBR
Lane Configurations						
Ideal Flow (vphpl)	1800	1800	1800	1700	1700	1800
Total Lost time (s)		4.0	4.0	4.0	4.0	
Lane Util. Factor		1.00	1.00	1.00	1.00	
Frt		1.00	1.00	0.85	1.00	
Flt Protected		1.00	1.00	1.00	0.95	
Satd. Flow (prot)		1800	1800	1445	1615	
Flt Permitted		1.00	1.00	1.00	0.95	
Satd. Flow (perm)		1800	1800	1445	1615	
Volume (vph)	0	486	346	165	171	0
Peak-hour factor, PHF	1.00	0.91	0.90	0.88	0.79	1.00
Adj. Flow (vph)	0	534	384	188	216	0
RTOR Reduction (vph)	0	0	0	0	0	0
Lane Group Flow (vph)	0	534	384	188	216	0
Turn Type				Free		
Protected Phases		2	6		4	
Permitted Phases				Free		
Actuated Green, G (s)		39.0	39.0	60.0	13.0	
Effective Green, g (s)		39.0	39.0	60.0	13.0	
Actuated g/C Ratio		0.65	0.65	1.00	0.22	
Clearance Time (s)		4.0	4.0		4.0	
Vehicle Extension (s)		3.0	3.0		3.0	
Lane Grp Cap (vph)		1170	1170	1445	350	
v/s Ratio Prot		c0.30	0.21		c0.13	
v/s Ratio Perm				0.13		
v/c Ratio		0.46	0.33	0.13	0.62	
Uniform Delay, d1		5.2	4.7	0.0	21.2	
Progression Factor		1.00	1.00	1.00	1.00	
Incremental Delay, d2		1.3	0.7	0.2	3.2	
Delay (s)		6.5	5.4	0.2	24.5	
Level of Service		A	A	A	C	
Approach Delay (s)		6.5	3.7		24.5	
Approach LOS		A	A		C	

Intersection Summary			
HCM Average Control Delay	8.2	HCM Level of Service	A
HCM Volume to Capacity ratio	0.50		
Actuated Cycle Length (s)	60.0	Sum of lost time (s)	8.0
Intersection Capacity Utilization	44.3%	ICU Level of Service	A
Analysis Period (min)	15		
c Critical Lane Group			

Movement	EBL	EBT	WBT	WBR	SBL	SBR
Lane Configurations						
Ideal Flow (vphpl)	1800	1800	1800	1800	1800	1800
Total Lost time (s)	4.0	4.0	4.0		4.0	
Lane Util. Factor	1.00	1.00	1.00		1.00	
Frt	1.00	1.00	0.90		0.96	
Flt Protected	0.95	1.00	1.00		0.97	
Satd. Flow (prot)	1710	1800	1623		1664	
Flt Permitted	0.95	1.00	1.00		0.97	
Satd. Flow (perm)	1710	1800	1623		1664	
Volume (vph)	70	160	54	145	347	170
Peak-hour factor, PHF	0.61	0.61	0.83	0.83	0.90	0.90
Adj. Flow (vph)	115	262	65	175	386	189
RTOR Reduction (vph)	0	0	150	0	27	0
Lane Group Flow (vph)	115	262	90	0	548	0
Turn Type	Prot					
Protected Phases	7	4	8		6	
Permitted Phases						
Actuated Green, G (s)	7.1	18.5	7.4		24.9	
Effective Green, g (s)	7.1	18.5	7.4		24.9	
Actuated g/C Ratio	0.14	0.36	0.14		0.48	
Clearance Time (s)	4.0	4.0	4.0		4.0	
Vehicle Extension (s)	3.0	3.0	3.0		3.0	
Lane Grp Cap (vph)	236	648	234		806	
v/s Ratio Prot	0.07	c0.15	0.06		c0.33	
v/s Ratio Perm						
v/c Ratio	0.49	0.40	0.39		0.68	
Uniform Delay, d1	20.5	12.3	19.9		10.2	
Progression Factor	1.00	1.00	1.00		1.00	
Incremental Delay, d2	1.6	0.4	1.1		2.3	
Delay (s)	22.1	12.7	21.0		12.5	
Level of Service	C	B	C		B	
Approach Delay (s)		15.6	21.0		12.5	
Approach LOS		B	C		B	

Intersection Summary			
HCM Average Control Delay	15.2	HCM Level of Service	B
HCM Volume to Capacity ratio	0.56		
Actuated Cycle Length (s)	51.4	Sum of lost time (s)	8.0
Intersection Capacity Utilization	62.0%	ICU Level of Service	B
Analysis Period (min)	15		
c Critical Lane Group			

Church of the Woods
Opening Year (2008) With Project Traffic Conditions
Sunday Peak Hour With Improvements

Level Of Service Computation Report
2000 HCM 4-Way Stop Method (Base Volume Alternative)

Intersection #4 Daley Canyon Road/State Route 189

Cycle (sec):	100	Critical Vol./Cap.(X):	0.717
Loss Time (sec):	0 (Y+R=4.0 sec)	Average Delay (sec/veh):	16.8
Optimal Cycle:	0	Level Of Service:	C

Approach:	North Bound				South Bound				East Bound				West Bound			
Movement:	L	- T	- R		L	- T	- R		L	- T	- R		L	- T	- R	
Control:	Stop Sign				Stop Sign				Stop Sign				Stop Sign			
Rights:	Include				Include				Include				Include			
Min. Green:	10	10	10		10	10	10		10	10	10		10	10	10	
Lanes:	1 0	1 0	0		0 0	0 1	0		1 0	0 0	1		0 0	0 0	0	
Volume Module:																
Base Vol:	145	204	0		0	318	40		187	0	303		0	0	0	
Growth Adj:	1.00	1.00	1.00		1.00	1.00	1.00		1.00	1.00	1.00		1.00	1.00	1.00	
Initial Bse:	145	204	0		0	318	40		187	0	303		0	0	0	
User Adj:	1.00	1.00	1.00		1.00	1.00	1.00		1.00	1.00	1.00		1.00	1.00	1.00	
PHF Adj:	0.86	0.86	0.86		0.87	0.87	0.87		0.96	0.96	0.96		1.00	1.00	1.00	
PHF Volume:	169	237	0		0	367	46		195	0	315		0	0	0	
Reduct Vol:	0	0	0		0	0	0		0	0	0		0	0	0	
Reduced Vol:	169	237	0		0	367	46		195	0	315		0	0	0	
PCE Adj:	1.00	1.00	1.00		1.00	1.00	1.00		1.00	1.00	1.00		1.00	1.00	1.00	
MLF Adj:	1.00	1.00	1.00		1.00	1.00	1.00		1.00	1.00	1.00		1.00	1.00	1.00	
FinalVolume:	169	237	0		0	367	46		195	0	315		0	0	0	
Saturation Flow Module:																
Adjustment:	1.00	1.00	1.00		1.00	1.00	1.00		1.00	1.00	1.00		1.00	1.00	1.00	
Lanes:	1.00	1.00	0.00		0.00	0.89	0.11		1.00	0.00	1.00		0.00	0.00	0.00	
Final Sat.:	501	539	0		0	512	64		495	0	592		0	0	0	
Capacity Analysis Module:																
Vol/Sat:	0.34	0.44	xxxx		xxxx	0.72	0.72		0.39	xxxx	0.53		xxxx	xxxx	xxxx	
Crit Moves:		****				****					****					
Delay/Veh:	13.1	14.0	0.0		0.0	22.6	22.6		14.1	0.0	14.8		0.0	0.0	0.0	
Delay Adj:	1.00	1.00	1.00		1.00	1.00	1.00		1.00	1.00	1.00		1.00	1.00	1.00	
AdjDel/Veh:	13.1	14.0	0.0		0.0	22.6	22.6		14.1	0.0	14.8		0.0	0.0	0.0	
LOS by Move:	B	B	*		*	C	C		B	*	B		*	*	*	
ApproachDel:		13.7				22.6				14.5				xxxxxx		
Delay Adj:		1.00				1.00				1.00				xxxxx		
ApprAdjDel:		13.7				22.6				14.5				xxxxxx		
LOS by Appr:		B				C				B				*		
AllWayAvgQ:	0.5	0.7	0.0		2.2	2.2	2.2		0.6	0.0	1.0		0.0	0.0	0.0	

Note: Queue reported is the number of cars per lane.

Movement	WBL	WBR	NBT	NBR	SBL	SBT
Lane Configurations						
Ideal Flow (vphpl)	1700	1700	1800	1800	1700	1800
Grade (%)	-5%		-5%			0%
Total Lost time (s)	4.0		4.0		4.0	4.0
Lane Util. Factor	1.00		1.00		1.00	1.00
Frt	0.96		0.97		1.00	1.00
Flt Protected	0.97		1.00		0.95	1.00
Satd. Flow (prot)	1611		1791		1615	1800
Flt Permitted	0.97		1.00		0.62	1.00
Satd. Flow (perm)	1611		1791		1048	1800
Volume (vph)	154	75	145	40	65	167
Peak-hour factor, PHF	0.69	0.69	0.81	0.81	0.69	0.69
Adj. Flow (vph)	223	109	179	49	94	242
RTOR Reduction (vph)	43	0	10	0	0	0
Lane Group Flow (vph)	289	0	218	0	94	242
Turn Type					Perm	
Protected Phases	8		2			6
Permitted Phases					6	
Actuated Green, G (s)	15.0		37.0		37.0	37.0
Effective Green, g (s)	15.0		37.0		37.0	37.0
Actuated g/C Ratio	0.25		0.62		0.62	0.62
Clearance Time (s)	4.0		4.0		4.0	4.0
Vehicle Extension (s)	3.0		3.0		3.0	3.0
Lane Grp Cap (vph)	403		1104		646	1110
v/s Ratio Prot	c0.18		0.12			c0.13
v/s Ratio Perm					0.09	
v/c Ratio	0.72		0.20		0.15	0.22
Uniform Delay, d1	20.6		5.0		4.8	5.1
Progression Factor	1.00		0.59		1.00	1.00
Incremental Delay, d2	6.0		0.4		0.5	0.5
Delay (s)	26.6		3.3		5.3	5.5
Level of Service	C		A		A	A
Approach Delay (s)	26.6		3.3			5.5
Approach LOS	C		A			A

Intersection Summary			
HCM Average Control Delay	12.7	HCM Level of Service	B
HCM Volume to Capacity ratio	0.36		
Actuated Cycle Length (s)	60.0	Sum of lost time (s)	8.0
Intersection Capacity Utilization	43.6%	ICU Level of Service	A
Analysis Period (min)	15		

c Critical Lane Group

Movement	EBL	EBT	WBT	WBR	SBL	SBR
Lane Configurations						
Ideal Flow (vphpl)	1700	1800	1800	1700	1700	1700
Grade (%)		0%	-2%		5%	
Total Lost time (s)	4.0	4.0	4.0	4.0	4.0	4.0
Lane Util. Factor	1.00	1.00	1.00	1.00	1.00	1.00
Frt	1.00	1.00	1.00	0.85	1.00	0.85
Flt Protected	0.95	1.00	1.00	1.00	0.95	1.00
Satd. Flow (prot)	1615	1800	1818	1459	1575	1409
Flt Permitted	0.95	1.00	1.00	1.00	0.95	1.00
Satd. Flow (perm)	1615	1800	1818	1459	1575	1409
Volume (vph)	55	280	516	130	165	156
Peak-hour factor, PHF	0.82	0.82	0.84	0.84	0.89	0.89
Adj. Flow (vph)	67	341	614	155	185	175
RTOR Reduction (vph)	0	0	0	94	0	121
Lane Group Flow (vph)	67	341	614	61	185	54
Turn Type	Prot			Perm		Perm
Protected Phases	7	4	8		6	
Permitted Phases				8		6
Actuated Green, G (s)	6.0	33.5	23.5	23.5	18.5	18.5
Effective Green, g (s)	6.0	33.5	23.5	23.5	18.5	18.5
Actuated g/C Ratio	0.10	0.56	0.39	0.39	0.31	0.31
Clearance Time (s)	4.0	4.0	4.0	4.0	4.0	4.0
Vehicle Extension (s)	3.0	3.0	3.0	3.0	3.0	3.0
Lane Grp Cap (vph)	162	1005	712	571	486	434
v/s Ratio Prot	0.04	c0.19	c0.34		c0.12	
v/s Ratio Perm				0.04		0.04
v/c Ratio	0.41	0.34	0.86	0.11	0.38	0.12
Uniform Delay, d1	25.3	7.2	16.8	11.6	16.3	14.9
Progression Factor	1.00	1.00	1.00	1.00	0.90	1.25
Incremental Delay, d2	1.7	0.2	10.5	0.1	2.0	0.5
Delay (s)	27.1	7.4	27.3	11.7	16.7	19.2
Level of Service	C	A	C	B	B	B
Approach Delay (s)		10.6	24.1		17.9	
Approach LOS		B	C		B	

Intersection Summary			
HCM Average Control Delay	19.1	HCM Level of Service	B
HCM Volume to Capacity ratio	0.62		
Actuated Cycle Length (s)	60.0	Sum of lost time (s)	12.0
Intersection Capacity Utilization	57.2%	ICU Level of Service	B
Analysis Period (min)	15		

c Critical Lane Group

Movement	EBL	EBT	WBT	WBR	SBL	SBR
Lane Configurations						
Ideal Flow (vphpl)	1700	1800	1800	1800	1800	1700
Total Lost time (s)	4.0	4.0	4.0			4.0
Lane Util. Factor	1.00	1.00	1.00			1.00
Frt	1.00	1.00	1.00			0.86
Flt Protected	0.95	1.00	1.00			1.00
Satd. Flow (prot)	1615	1800	1800			1470
Flt Permitted	0.95	1.00	1.00			1.00
Satd. Flow (perm)	1615	1800	1800			1470
Volume (vph)	271	311	342	0	0	440
Peak-hour factor, PHF	0.87	0.85	0.89	1.00	1.00	0.76
Adj. Flow (vph)	311	366	384	0	0	579
RTOR Reduction (vph)	0	0	0	0	0	140
Lane Group Flow (vph)	311	366	384	0	0	439
Turn Type	Prot					Over
Protected Phases	5	2	6			5
Permitted Phases						
Actuated Green, G (s)	30.0	60.0	22.0			30.0
Effective Green, g (s)	30.0	60.0	22.0			30.0
Actuated g/C Ratio	0.50	1.00	0.37			0.50
Clearance Time (s)	4.0	4.0	4.0			4.0
Vehicle Extension (s)	3.0	3.0	3.0			3.0
Lane Grp Cap (vph)	808	1800	660			735
v/s Ratio Prot	0.19	0.20	c0.21			c0.30
v/s Ratio Perm						
v/c Ratio	0.38	0.20	0.58			0.60
Uniform Delay, d1	9.3	0.0	15.3			10.7
Progression Factor	1.00	1.00	0.53			1.00
Incremental Delay, d2	0.3	0.3	3.5			1.3
Delay (s)	9.6	0.3	11.7			12.0
Level of Service	A	A	B			B
Approach Delay (s)		4.5	11.7		12.0	
Approach LOS		A	B		B	

Intersection Summary			
HCM Average Control Delay	8.9	HCM Level of Service	A
HCM Volume to Capacity ratio	0.59		
Actuated Cycle Length (s)	60.0	Sum of lost time (s)	8.0
Intersection Capacity Utilization	56.1%	ICU Level of Service	B
Analysis Period (min)	15		
c Critical Lane Group			

Movement	WBL	WBR	NBT	NBR	SBL	SBT
Lane Configurations						
Sign Control	Stop		Free			Free
Grade	0%		0%			0%
Volume (veh/h)	0	149	271	0	186	440
Peak Hour Factor	1.00	0.52	0.86	1.00	0.60	0.76
Hourly flow rate (vph)	0	287	315	0	310	579
Pedestrians						
Lane Width (ft)						
Walking Speed (ft/s)						
Percent Blockage						
Right turn flare (veh)						
Median type	None					
Median storage veh)						
Upstream signal (ft)			158			
pX, platoon unblocked						
vC, conflicting volume	1514	315			315	
vC1, stage 1 conf vol						
vC2, stage 2 conf vol						
vCu, unblocked vol	1514	315			315	
tC, single (s)	6.4	6.2			4.1	
tC, 2 stage (s)						
tF (s)	3.5	3.3			2.2	
p0 queue free %	100	61			75	
cM capacity (veh/h)	100	730			1257	

Direction, Lane #	WB 1	NB 1	SB 1	SB 2
Volume Total	287	315	310	579
Volume Left	0	0	310	0
Volume Right	287	0	0	0
cSH	730	1700	1257	1700
Volume to Capacity	0.39	0.19	0.25	0.34
Queue Length 95th (ft)	47	0	24	0
Control Delay (s)	13.1	0.0	8.8	0.0
Lane LOS	B		A	
Approach Delay (s)	13.1	0.0	3.1	
Approach LOS	B			

Intersection Summary			
Average Delay	4.3		
Intersection Capacity Utilization	32.6%	ICU Level of Service	A
Analysis Period (min)	15		

Movement	EBL	EBT	WBT	WBR	SBL	SBR
Lane Configurations						
Ideal Flow (vphpl)	1800	1800	1800	1700	1700	1800
Total Lost time (s)		4.0	4.0	4.0	4.0	
Lane Util. Factor		1.00	1.00	1.00	1.00	
Frt		1.00	1.00	0.85	1.00	
Flt Protected		1.00	1.00	1.00	0.95	
Satd. Flow (prot)		1800	1800	1445	1615	
Flt Permitted		1.00	1.00	1.00	0.95	
Satd. Flow (perm)		1800	1800	1445	1615	
Volume (vph)	0	311	342	149	186	0
Peak-hour factor, PHF	1.00	0.85	0.89	0.52	0.60	1.00
Adj. Flow (vph)	0	366	384	287	310	0
RTOR Reduction (vph)	0	0	0	0	0	0
Lane Group Flow (vph)	0	366	384	287	310	0
Turn Type				Free		
Protected Phases		2	6		4	
Permitted Phases				Free		
Actuated Green, G (s)		36.2	36.2	60.0	15.8	
Effective Green, g (s)		36.2	36.2	60.0	15.8	
Actuated g/C Ratio		0.60	0.60	1.00	0.26	
Clearance Time (s)		4.0	4.0		4.0	
Vehicle Extension (s)		3.0	3.0		3.0	
Lane Grp Cap (vph)		1086	1086	1445	425	
v/s Ratio Prot		0.20	c0.21		c0.19	
v/s Ratio Perm				0.20		
v/c Ratio		0.34	0.35	0.20	0.73	
Uniform Delay, d1		5.9	6.0	0.0	20.2	
Progression Factor		1.00	1.00	1.00	1.00	
Incremental Delay, d2		0.8	0.9	0.3	6.2	
Delay (s)		6.8	6.9	0.3	26.3	
Level of Service		A	A	A	C	
Approach Delay (s)		6.8	4.1		26.3	
Approach LOS		A	A		C	

Intersection Summary			
HCM Average Control Delay	9.9	HCM Level of Service	A
HCM Volume to Capacity ratio	0.47		
Actuated Cycle Length (s)	60.0	Sum of lost time (s)	8.0
Intersection Capacity Utilization	37.2%	ICU Level of Service	A
Analysis Period (min)	15		
c Critical Lane Group			

YEAR 2013 WITH PROJECT WITH IMPROVEMENTS CONDITIONS

Movement	EBL	EBT	WBT	WBR	SBL	SBR
Lane Configurations						
Ideal Flow (vphpl)	1700	1800	1800	1800	1800	1800
Total Lost time (s)	4.0	4.0	4.0		4.0	
Lane Util. Factor	1.00	1.00	1.00		1.00	
Frt	1.00	1.00	0.91		0.94	
Flt Protected	0.95	1.00	1.00		0.97	
Satd. Flow (prot)	1615	1800	1631		1651	
Flt Permitted	0.95	1.00	1.00		0.97	
Satd. Flow (perm)	1615	1800	1631		1651	
Volume (vph)	133	221	90	205	390	274
Peak-hour factor, PHF	0.89	0.89	0.88	0.88	0.90	0.90
Adj. Flow (vph)	149	248	102	233	433	304
RTOR Reduction (vph)	0	0	132	0	43	0
Lane Group Flow (vph)	149	248	203	0	694	0
Turn Type	Prot					
Protected Phases	7	4	8		6	
Permitted Phases						
Actuated Green, G (s)	7.3	21.9	10.6		25.2	
Effective Green, g (s)	7.3	21.9	10.6		25.2	
Actuated g/C Ratio	0.13	0.40	0.19		0.46	
Clearance Time (s)	4.0	4.0	4.0		4.0	
Vehicle Extension (s)	3.0	3.0	3.0		3.0	
Lane Grp Cap (vph)	214	715	314		755	
v/s Ratio Prot	c0.09	0.14	c0.12		c0.42	
v/s Ratio Perm						
v/c Ratio	0.70	0.35	0.65		0.92	
Uniform Delay, d1	22.8	11.6	20.5		14.0	
Progression Factor	1.00	1.00	1.00		1.00	
Incremental Delay, d2	9.4	0.3	4.5		16.1	
Delay (s)	32.3	11.9	25.0		30.1	
Level of Service	C	B	C		C	
Approach Delay (s)		19.5	25.0		30.1	
Approach LOS		B	C		C	

Intersection Summary			
HCM Average Control Delay	26.1	HCM Level of Service	C
HCM Volume to Capacity ratio	0.81		
Actuated Cycle Length (s)	55.1	Sum of lost time (s)	12.0
Intersection Capacity Utilization	77.1%	ICU Level of Service	D
Analysis Period (min)	15		
c Critical Lane Group			

Church of the Woods
Year 2013 With Project Traffic Conditions
Saturday Peak Hour WIth Improvements

Level Of Service Computation Report
2000 HCM 4-Way Stop Method (Base Volume Alternative)

Intersection #4 Daley Canyon Road/State Route 189

Cycle (sec):	100	Critical Vol./Cap.(X):	0.842
Loss Time (sec):	0 (Y+R=4.0 sec)	Average Delay (sec/veh):	28.0
Optimal Cycle:	0	Level Of Service:	D

Approach:	North Bound				South Bound				East Bound				West Bound			
Movement:	L	- T	- R		L	- T	- R		L	- T	- R		L	- T	- R	
Control:	Stop Sign				Stop Sign				Stop Sign				Stop Sign			
Rights:	Include				Include				Include				Include			
Min. Green:	10	10	10		10	10	10		10	10	10		10	10	10	
Lanes:	1	0 1	0	0	0	0 0	1	0	1	0 0	0	1	0	0 0	0	0
Volume Module:																
Base Vol:	210	382	0	0	285	79	328	0	306	0	0	0				
Growth Adj:	1.00	1.00	1.00	1.00	1.00	1.00	1.00	1.00	1.00	1.00	1.00	1.00				
Initial Bse:	210	382	0	0	285	79	328	0	306	0	0	0				
User Adj:	1.00	1.00	1.00	1.00	1.00	1.00	1.00	1.00	1.00	1.00	1.00	1.00				
PHF Adj:	0.91	0.91	0.91	0.90	0.90	0.90	0.89	0.89	0.89	1.00	1.00	1.00				
PHF Volume:	232	422	0	0	316	88	367	0	342	0	0	0				
Reduct Vol:	0	0	0	0	0	0	0	0	0	0	0	0				
Reduced Vol:	232	422	0	0	316	88	367	0	342	0	0	0				
PCE Adj:	1.00	1.00	1.00	1.00	1.00	1.00	1.00	1.00	1.00	1.00	1.00	1.00				
MLF Adj:	1.00	1.00	1.00	1.00	1.00	1.00	1.00	1.00	1.00	1.00	1.00	1.00				
FinalVolume:	232	422	0	0	316	88	367	0	342	0	0	0				
Saturation Flow Module:																
Adjustment:	1.00	1.00	1.00	1.00	1.00	1.00	1.00	1.00	1.00	1.00	1.00	1.00				
Lanes:	1.00	1.00	0.00	0.00	0.78	0.22	1.00	0.00	1.00	0.00	0.00	0.00				
Final Sat.:	467	501	0	0	410	114	469	0	553	0	0	0				
Capacity Analysis Module:																
Vol/Sat:	0.50	0.84	xxxx	xxxx	0.77	0.77	0.78	xxxx	0.62	xxxx	xxxx	xxxx				
Crit Moves:		****			****		****									
Delay/Veh:	17.6	36.8	0.0	0.0	28.9	28.9	32.2	0.0	18.8	0.0	0.0	0.0				
Delay Adj:	1.00	1.00	1.00	1.00	1.00	1.00	1.00	1.00	1.00	1.00	1.00	1.00				
AdjDel/Veh:	17.6	36.8	0.0	0.0	28.9	28.9	32.2	0.0	18.8	0.0	0.0	0.0				
LOS by Move:	C	E	*	*	D	D	D	*	C	*	*	*				
ApproachDel:		30.0			28.9			25.7			xxxxxx					
Delay Adj:		1.00			1.00			1.00			xxxxx					
ApprAdjDel:		30.0			28.9			25.7			xxxxxx					
LOS by Appr:		D			D			D			*					
AllWayAvgQ:	0.9	3.8	0.0	2.8	2.8	2.8	2.8	0.0	1.5	0.0	0.0	0.0				

Note: Queue reported is the number of cars per lane.

Movement	WBL	WBR	NBT	NBR	SBL	SBT
Lane Configurations						
Ideal Flow (vphpl)	1700	1800	1700	1800	1700	1800
Grade (%)	-5%		-5%			0%
Total Lost time (s)	4.0		4.0		4.0	4.0
Lane Util. Factor	1.00		1.00		1.00	1.00
Frt	0.93		0.97		1.00	1.00
Flt Protected	0.98		1.00		0.95	1.00
Satd. Flow (prot)	1580		1684		1615	1800
Flt Permitted	0.98		1.00		0.56	1.00
Satd. Flow (perm)	1580		1684		949	1800
Volume (vph)	76	88	215	71	107	292
Peak-hour factor, PHF	0.77	0.77	0.87	0.87	0.79	0.79
Adj. Flow (vph)	99	114	247	82	135	370
RTOR Reduction (vph)	91	0	12	0	0	0
Lane Group Flow (vph)	122	0	317	0	135	370
Turn Type					Perm	
Protected Phases	8		2			6
Permitted Phases					6	
Actuated Green, G (s)	11.1		40.9		40.9	40.9
Effective Green, g (s)	11.1		40.9		40.9	40.9
Actuated g/C Ratio	0.18		0.68		0.68	0.68
Clearance Time (s)	4.0		4.0		4.0	4.0
Vehicle Extension (s)	3.0		3.0		3.0	3.0
Lane Grp Cap (vph)	292		1148		647	1227
v/s Ratio Prot	c0.08		0.19			c0.21
v/s Ratio Perm					0.14	
v/c Ratio	0.42		0.28		0.21	0.30
Uniform Delay, d1	21.6		3.7		3.5	3.8
Progression Factor	1.00		0.90		1.00	1.00
Incremental Delay, d2	1.0		0.6		0.7	0.6
Delay (s)	22.6		3.9		4.3	4.5
Level of Service	C		A		A	A
Approach Delay (s)	22.6		3.9			4.4
Approach LOS	C		A			A

Intersection Summary			
HCM Average Control Delay	8.0	HCM Level of Service	A
HCM Volume to Capacity ratio	0.33		
Actuated Cycle Length (s)	60.0	Sum of lost time (s)	8.0
Intersection Capacity Utilization	46.5%	ICU Level of Service	A
Analysis Period (min)	15		

c Critical Lane Group

Movement	EBL	EBT	WBT	WBR	SBL	SBR
Lane Configurations						
Ideal Flow (vphpl)	1700	1800	1800	1700	1700	1700
Grade (%)		0%	-2%		5%	
Total Lost time (s)	4.0	4.0	4.0	4.0	4.0	4.0
Lane Util. Factor	1.00	1.00	1.00	1.00	1.00	1.00
Frt	1.00	1.00	1.00	0.85	1.00	0.85
Flt Protected	0.95	1.00	1.00	1.00	0.95	1.00
Satd. Flow (prot)	1615	1800	1818	1459	1575	1409
Flt Permitted	0.95	1.00	1.00	1.00	0.95	1.00
Satd. Flow (perm)	1615	1800	1818	1459	1575	1409
Volume (vph)	121	470	478	165	272	96
Peak-hour factor, PHF	0.94	0.94	0.89	0.89	0.89	0.89
Adj. Flow (vph)	129	500	537	185	306	108
RTOR Reduction (vph)	0	0	0	105	0	83
Lane Group Flow (vph)	129	500	537	80	306	25
Turn Type	Prot			Perm		Perm
Protected Phases	5	2	6		4	
Permitted Phases				6		4
Actuated Green, G (s)	8.0	37.9	25.9	25.9	14.1	14.1
Effective Green, g (s)	8.0	37.9	25.9	25.9	14.1	14.1
Actuated g/C Ratio	0.13	0.63	0.43	0.43	0.23	0.23
Clearance Time (s)	4.0	4.0	4.0	4.0	4.0	4.0
Vehicle Extension (s)	3.0	3.0	3.0	3.0	3.0	3.0
Lane Grp Cap (vph)	215	1137	785	630	370	331
v/s Ratio Prot	c0.08	0.28	c0.30		c0.19	
v/s Ratio Perm				0.05		0.02
v/c Ratio	0.60	0.44	0.68	0.13	0.83	0.08
Uniform Delay, d1	24.5	5.6	13.8	10.3	21.8	17.9
Progression Factor	1.00	1.00	1.00	1.00	0.84	0.62
Incremental Delay, d2	4.5	1.2	4.8	0.4	13.4	0.1
Delay (s)	29.0	6.9	18.6	10.7	31.8	11.3
Level of Service	C	A	B	B	C	B
Approach Delay (s)		11.4	16.5		26.5	
Approach LOS		B	B		C	

Intersection Summary			
HCM Average Control Delay	17.0	HCM Level of Service	B
HCM Volume to Capacity ratio	0.71		
Actuated Cycle Length (s)	60.0	Sum of lost time (s)	12.0
Intersection Capacity Utilization	61.7%	ICU Level of Service	B
Analysis Period (min)	15		

c Critical Lane Group

Movement	EBL	EBT	EBR	WBL	WBT	WBR	NBL	NBT	NBR	SBL	SBT	SBR
Lane Configurations												
Ideal Flow (vphpl)	1800	1800	1800	1800	1800	1800	1800	1800	1800	1800	1800	1800
Total Lost time (s)	4.0	4.0		4.0	4.0			4.0			4.0	
Lane Util. Factor	1.00	1.00		1.00	1.00			1.00			1.00	
Frt	1.00	1.00		1.00	0.99			0.89			0.94	
Flt Protected	0.95	1.00		0.95	1.00			0.99			0.97	
Satd. Flow (prot)	1710	1800		1710	1789			1584			1651	
Flt Permitted	0.95	1.00		0.95	1.00			0.96			0.82	
Satd. Flow (perm)	1710	1800		1710	1789			1537			1399	
Volume (vph)	53	801	1	11	739	32	1	0	5	50	0	35
Peak-hour factor, PHF	0.92	0.92	0.92	0.94	0.94	0.94	0.50	0.50	0.50	0.84	0.84	0.84
Adj. Flow (vph)	58	871	1	12	786	34	2	0	10	60	0	42
RTOR Reduction (vph)	0	0	0	0	2	0	0	8	0	0	34	0
Lane Group Flow (vph)	58	872	0	12	818	0	0	4	0	0	68	0
Turn Type	Prot			Prot			Perm			Perm		
Protected Phases	7	4		3	8			2			6	
Permitted Phases							2			6		
Actuated Green, G (s)	4.9	35.3		1.6	32.0			10.9			10.9	
Effective Green, g (s)	4.9	35.3		1.6	32.0			10.9			10.9	
Actuated g/C Ratio	0.08	0.59		0.03	0.54			0.18			0.18	
Clearance Time (s)	4.0	4.0		4.0	4.0			4.0			4.0	
Vehicle Extension (s)	3.0	3.0		3.0	3.0			3.0			3.0	
Lane Grp Cap (vph)	140	1063		46	957			280			255	
v/s Ratio Prot	c0.03	c0.48		0.01	0.46							
v/s Ratio Perm								0.00			c0.05	
v/c Ratio	0.41	0.82		0.26	0.85			0.01			0.27	
Uniform Delay, d1	26.1	9.7		28.5	11.9			20.0			21.0	
Progression Factor	1.00	1.00		1.00	1.00			1.00			1.00	
Incremental Delay, d2	2.0	5.2		3.0	7.5			0.0			0.6	
Delay (s)	28.1	14.9		31.5	19.4			20.1			21.6	
Level of Service	C	B		C	B			C			C	
Approach Delay (s)		15.7			19.6			20.1			21.6	
Approach LOS		B			B			C			C	

Intersection Summary			
HCM Average Control Delay	17.8	HCM Level of Service	B
HCM Volume to Capacity ratio	0.69		
Actuated Cycle Length (s)	59.8	Sum of lost time (s)	12.0
Intersection Capacity Utilization	65.0%	ICU Level of Service	C
Analysis Period (min)	15		
c Critical Lane Group			

Movement	EBL	EBT	WBT	WBR	SBL	SBR
Lane Configurations						
Ideal Flow (vphpl)	1800	1800	1800	1800	1800	1800
Total Lost time (s)	4.0	4.0	4.0	4.0	4.0	4.0
Lane Util. Factor	1.00	1.00	1.00	1.00	1.00	1.00
Frt	1.00	1.00	1.00	0.85	1.00	0.85
Flt Protected	0.95	1.00	1.00	1.00	0.95	1.00
Satd. Flow (prot)	1710	1800	1800	1530	1710	1530
Flt Permitted	0.95	1.00	1.00	1.00	0.95	1.00
Satd. Flow (perm)	1710	1800	1800	1530	1710	1530
Volume (vph)	10	878	760	18	20	11
Peak-hour factor, PHF	0.95	0.90	0.90	0.95	0.95	0.95
Adj. Flow (vph)	11	976	844	19	21	12
RTOR Reduction (vph)	0	0	0	8	0	10
Lane Group Flow (vph)	11	976	844	11	21	2
Turn Type	Prot			Perm		Perm
Protected Phases	7	4	8		6	
Permitted Phases				8		6
Actuated Green, G (s)	1.4	34.8	29.4	29.4	10.7	10.7
Effective Green, g (s)	1.4	34.8	29.4	29.4	10.7	10.7
Actuated g/C Ratio	0.03	0.65	0.55	0.55	0.20	0.20
Clearance Time (s)	4.0	4.0	4.0	4.0	4.0	4.0
Vehicle Extension (s)	3.0	3.0	3.0	3.0	3.0	3.0
Lane Grp Cap (vph)	45	1171	989	841	342	306
v/s Ratio Prot	0.01	c0.54	0.47		c0.01	
v/s Ratio Perm				0.01		0.00
v/c Ratio	0.24	0.83	0.85	0.01	0.06	0.01
Uniform Delay, d1	25.5	7.1	10.2	5.5	17.3	17.1
Progression Factor	1.00	1.00	1.00	1.00	1.00	1.00
Incremental Delay, d2	2.8	5.2	7.3	0.0	0.1	0.0
Delay (s)	28.4	12.4	17.5	5.5	17.4	17.2
Level of Service	C	B	B	A	B	B
Approach Delay (s)		12.6	17.2		17.3	
Approach LOS		B	B		B	

Intersection Summary			
HCM Average Control Delay	14.8	HCM Level of Service	B
HCM Volume to Capacity ratio	0.65		
Actuated Cycle Length (s)	53.5	Sum of lost time (s)	8.0
Intersection Capacity Utilization	63.8%	ICU Level of Service	B
Analysis Period (min)	15		
c Critical Lane Group			

Movement	EBL	EBT	WBT	WBR	SBL	SBR
Lane Configurations						
Ideal Flow (vphpl)	1700	1800	1800	1800	1800	1700
Total Lost time (s)	4.0	4.0	4.0			4.0
Lane Util. Factor	1.00	1.00	1.00			1.00
Frt	1.00	1.00	1.00			0.86
Flt Protected	0.95	1.00	1.00			1.00
Satd. Flow (prot)	1615	1800	1800			1470
Flt Permitted	0.95	1.00	1.00			1.00
Satd. Flow (perm)	1615	1800	1800			1470
Volume (vph)	389	509	362	0	0	416
Peak-hour factor, PHF	0.94	0.91	0.90	1.00	1.00	0.93
Adj. Flow (vph)	414	559	402	0	0	447
RTOR Reduction (vph)	0	0	0	0	0	158
Lane Group Flow (vph)	414	559	402	0	0	289
Turn Type	Prot					Over
Protected Phases	5	2	6			5
Permitted Phases						
Actuated Green, G (s)	28.0	60.0	24.0			28.0
Effective Green, g (s)	28.0	60.0	24.0			28.0
Actuated g/C Ratio	0.47	1.00	0.40			0.47
Clearance Time (s)	4.0	4.0	4.0			4.0
Vehicle Extension (s)	3.0	3.0	3.0			3.0
Lane Grp Cap (vph)	754	1800	720			686
v/s Ratio Prot	c0.26	0.31	c0.22			0.20
v/s Ratio Perm						
v/c Ratio	0.55	0.31	0.56			0.42
Uniform Delay, d1	11.5	0.0	13.9			10.6
Progression Factor	1.00	1.00	0.61			1.00
Incremental Delay, d2	0.8	0.4	3.0			0.4
Delay (s)	12.3	0.4	11.5			11.0
Level of Service	B	A	B			B
Approach Delay (s)		5.5	11.5		11.0	
Approach LOS		A	B		B	

Intersection Summary			
HCM Average Control Delay	8.2	HCM Level of Service	A
HCM Volume to Capacity ratio	0.55		
Actuated Cycle Length (s)	60.0	Sum of lost time (s)	8.0
Intersection Capacity Utilization	55.6%	ICU Level of Service	B
Analysis Period (min)	15		
c Critical Lane Group			

Movement	WBL	WBR	NBT	NBR	SBL	SBT
Lane Configurations						
Sign Control	Stop		Free			Free
Grade	0%		0%			0%
Volume (veh/h)	0	180	389	0	186	416
Peak Hour Factor	1.00	0.88	0.94	1.00	0.79	0.93
Hourly flow rate (vph)	0	205	414	0	235	447
Pedestrians						
Lane Width (ft)						
Walking Speed (ft/s)						
Percent Blockage						
Right turn flare (veh)						
Median type	None					
Median storage veh)						
Upstream signal (ft)			158			
pX, platoon unblocked						
vC, conflicting volume	1332	414			414	
vC1, stage 1 conf vol						
vC2, stage 2 conf vol						
vCu, unblocked vol	1332	414			414	
tC, single (s)	6.4	6.2			4.1	
tC, 2 stage (s)						
tF (s)	3.5	3.3			2.2	
p0 queue free %	100	68			80	
cM capacity (veh/h)	137	643			1156	

Direction, Lane #	WB 1	NB 1	SB 1	SB 2
Volume Total	205	414	235	447
Volume Left	0	0	235	0
Volume Right	205	0	0	0
cSH	643	1700	1156	1700
Volume to Capacity	0.32	0.24	0.20	0.26
Queue Length 95th (ft)	34	0	19	0
Control Delay (s)	13.2	0.0	8.9	0.0
Lane LOS	B		A	
Approach Delay (s)	13.2	0.0	3.1	
Approach LOS	B			

Intersection Summary			
Average Delay	3.7		
Intersection Capacity Utilization	40.0%	ICU Level of Service	A
Analysis Period (min)	15		

Movement	EBL	EBT	WBT	WBR	SBL	SBR
Lane Configurations						
Ideal Flow (vphpl)	1800	1800	1800	1700	1700	1800
Total Lost time (s)		4.0	4.0	4.0	4.0	
Lane Util. Factor		1.00	1.00	1.00	1.00	
Frt		1.00	1.00	0.85	1.00	
Flt Protected		1.00	1.00	1.00	0.95	
Satd. Flow (prot)		1800	1800	1445	1615	
Flt Permitted		1.00	1.00	1.00	0.95	
Satd. Flow (perm)		1800	1800	1445	1615	
Volume (vph)	0	509	362	180	186	0
Peak-hour factor, PHF	1.00	0.91	0.90	0.88	0.79	1.00
Adj. Flow (vph)	0	559	402	205	235	0
RTOR Reduction (vph)	0	0	0	0	0	0
Lane Group Flow (vph)	0	559	402	205	235	0
Turn Type				Free		
Protected Phases		2	6		4	
Permitted Phases				Free		
Actuated Green, G (s)		38.2	38.2	60.0	13.8	
Effective Green, g (s)		38.2	38.2	60.0	13.8	
Actuated g/C Ratio		0.64	0.64	1.00	0.23	
Clearance Time (s)		4.0	4.0		4.0	
Vehicle Extension (s)		3.0	3.0		3.0	
Lane Grp Cap (vph)		1146	1146	1445	371	
v/s Ratio Prot		c0.31	0.22		c0.15	
v/s Ratio Perm				0.14		
v/c Ratio		0.49	0.35	0.14	0.63	
Uniform Delay, d1		5.7	5.1	0.0	20.8	
Progression Factor		1.00	1.00	1.00	1.00	
Incremental Delay, d2		1.4	0.8	0.2	3.5	
Delay (s)		7.2	5.9	0.2	24.3	
Level of Service		A	A	A	C	
Approach Delay (s)		7.2	4.0		24.3	
Approach LOS		A	A		C	

Intersection Summary			
HCM Average Control Delay	8.7	HCM Level of Service	A
HCM Volume to Capacity ratio	0.53		
Actuated Cycle Length (s)	60.0	Sum of lost time (s)	8.0
Intersection Capacity Utilization	46.5%	ICU Level of Service	A
Analysis Period (min)	15		
c Critical Lane Group			

Movement	EBL	EBT	WBT	WBR	SBL	SBR
Lane Configurations						
Ideal Flow (vphpl)	1700	1800	1800	1700	1800	1800
Total Lost time (s)	4.0	4.0	4.0	4.0	4.0	
Lane Util. Factor	1.00	1.00	1.00	1.00	1.00	
Frt	1.00	1.00	1.00	0.85	0.91	
Flt Protected	0.95	1.00	1.00	1.00	0.98	
Satd. Flow (prot)	1615	1800	1800	1445	1616	
Flt Permitted	0.95	1.00	1.00	1.00	0.98	
Satd. Flow (perm)	1615	1800	1800	1445	1616	
Volume (vph)	290	325	276	104	98	169
Peak-hour factor, PHF	0.82	0.82	0.94	0.94	0.79	0.79
Adj. Flow (vph)	354	396	294	111	124	214
RTOR Reduction (vph)	0	0	0	84	107	0
Lane Group Flow (vph)	354	396	294	27	231	0
Turn Type	Prot			Perm		
Protected Phases	7	4	8		6	
Permitted Phases				8		
Actuated Green, G (s)	15.2	31.9	12.7	12.7	12.8	
Effective Green, g (s)	15.2	31.9	12.7	12.7	12.8	
Actuated g/C Ratio	0.29	0.61	0.24	0.24	0.24	
Clearance Time (s)	4.0	4.0	4.0	4.0	4.0	
Vehicle Extension (s)	3.0	3.0	3.0	3.0	3.0	
Lane Grp Cap (vph)	466	1090	434	348	393	
v/s Ratio Prot	c0.22	0.22	c0.16		c0.14	
v/s Ratio Perm				0.02		
v/c Ratio	0.76	0.36	0.68	0.08	0.59	
Uniform Delay, d1	17.1	5.3	18.1	15.5	17.6	
Progression Factor	1.00	1.00	1.00	1.00	1.00	
Incremental Delay, d2	7.0	0.2	4.2	0.1	2.3	
Delay (s)	24.1	5.5	22.3	15.6	19.9	
Level of Service	C	A	C	B	B	
Approach Delay (s)		14.3	20.5		19.9	
Approach LOS		B	C		B	

Intersection Summary			
HCM Average Control Delay	17.2	HCM Level of Service	B
HCM Volume to Capacity ratio	0.68		
Actuated Cycle Length (s)	52.7	Sum of lost time (s)	12.0
Intersection Capacity Utilization	60.0%	ICU Level of Service	B
Analysis Period (min)	15		
c Critical Lane Group			

Movement	EBL	EBT	WBT	WBR	SBL	SBR
Lane Configurations						
Ideal Flow (vphpl)	1800	1800	1800	1800	1800	1800
Total Lost time (s)	4.0	4.0	4.0		4.0	
Lane Util. Factor	1.00	1.00	1.00		1.00	
Frt	1.00	1.00	0.90		0.96	
Flt Protected	0.95	1.00	1.00		0.97	
Satd. Flow (prot)	1710	1800	1613		1666	
Flt Permitted	0.95	1.00	1.00		0.97	
Satd. Flow (perm)	1710	1800	1613		1666	
Volume (vph)	76	167	57	189	406	186
Peak-hour factor, PHF	0.61	0.61	0.83	0.83	0.90	0.90
Adj. Flow (vph)	125	274	69	228	451	207
RTOR Reduction (vph)	0	0	198	0	26	0
Lane Group Flow (vph)	125	274	99	0	632	0
Turn Type	Prot					
Protected Phases	7	4	8		6	
Permitted Phases						
Actuated Green, G (s)	6.9	17.8	6.9		26.2	
Effective Green, g (s)	6.9	17.8	6.9		26.2	
Actuated g/C Ratio	0.13	0.34	0.13		0.50	
Clearance Time (s)	4.0	4.0	4.0		4.0	
Vehicle Extension (s)	3.0	3.0	3.0		3.0	
Lane Grp Cap (vph)	227	616	214		839	
v/s Ratio Prot	c0.07	c0.15	0.06		c0.38	
v/s Ratio Perm						
v/c Ratio	0.55	0.44	0.46		0.75	
Uniform Delay, d1	21.1	13.3	20.8		10.3	
Progression Factor	1.00	1.00	1.00		1.00	
Incremental Delay, d2	2.9	0.5	1.6		3.9	
Delay (s)	24.0	13.8	22.4		14.2	
Level of Service	C	B	C		B	
Approach Delay (s)		17.0	22.4		14.2	
Approach LOS		B	C		B	

Intersection Summary			
HCM Average Control Delay	16.8	HCM Level of Service	B
HCM Volume to Capacity ratio	0.63		
Actuated Cycle Length (s)	52.0	Sum of lost time (s)	8.0
Intersection Capacity Utilization	69.5%	ICU Level of Service	C
Analysis Period (min)	15		
c Critical Lane Group			

Church of the Woods
Year 2013 With Project Traffic Conditions
Sunday Peak Hour With Improvements

Level Of Service Computation Report
2000 HCM 4-Way Stop Method (Base Volume Alternative)

Intersection #4 Daley Canyon Road/State Route 189

Cycle (sec):	100	Critical Vol./Cap.(X):	0.940
Loss Time (sec):	0 (Y+R=4.0 sec)	Average Delay (sec/veh):	28.8
Optimal Cycle:	0	Level Of Service:	D

Approach:	North Bound				South Bound				East Bound				West Bound			
Movement:	L	- T	- R		L	- T	- R		L	- T	- R		L	- T	- R	
Control:	Stop Sign				Stop Sign				Stop Sign				Stop Sign			
Rights:	Include				Include				Include				Include			
Min. Green:	10	10	10		10	10	10		10	10	10		10	10	10	
Lanes:	1 0	1 0	0		0 0	0 1	0		1 0	0 0	1		0 0	0 0	0	
Volume Module:																
Base Vol:	189	278	0		0	403	42		196	0	358		0	0	0	
Growth Adj:	1.00	1.00	1.00		1.00	1.00	1.00		1.00	1.00	1.00		1.00	1.00	1.00	
Initial Bse:	189	278	0		0	403	42		196	0	358		0	0	0	
User Adj:	1.00	1.00	1.00		1.00	1.00	1.00		1.00	1.00	1.00		1.00	1.00	1.00	
PHF Adj:	0.86	0.86	0.86		0.87	0.87	0.87		0.96	0.96	0.96		1.00	1.00	1.00	
PHF Volume:	220	324	0		0	465	48		204	0	373		0	0	0	
Reduct Vol:	0	0	0		0	0	0		0	0	0		0	0	0	
Reduced Vol:	220	324	0		0	465	48		204	0	373		0	0	0	
PCE Adj:	1.00	1.00	1.00		1.00	1.00	1.00		1.00	1.00	1.00		1.00	1.00	1.00	
MLF Adj:	1.00	1.00	1.00		1.00	1.00	1.00		1.00	1.00	1.00		1.00	1.00	1.00	
FinalVolume:	220	324	0		0	465	48		204	0	373		0	0	0	
Saturation Flow Module:																
Adjustment:	1.00	1.00	1.00		1.00	1.00	1.00		1.00	1.00	1.00		1.00	1.00	1.00	
Lanes:	1.00	1.00	0.00		0.00	0.91	0.09		1.00	0.00	1.00		0.00	0.00	0.00	
Final Sat.:	475	509	0		0	495	52		466	0	550		0	0	0	
Capacity Analysis Module:																
Vol/Sat:	0.46	0.64	xxxx		xxxx	0.94	0.94		0.44	xxxx	0.68		xxxx	xxxx	xxxx	
Crit Moves:		****				****					****					
Delay/Veh:	16.3	20.7	0.0		0.0	50.1	50.1		16.0	0.0	21.0		0.0	0.0	0.0	
Delay Adj:	1.00	1.00	1.00		1.00	1.00	1.00		1.00	1.00	1.00		1.00	1.00	1.00	
AdjDel/Veh:	16.3	20.7	0.0		0.0	50.1	50.1		16.0	0.0	21.0		0.0	0.0	0.0	
LOS by Move:	C	C	*		*	F	F		C	*	C		*	*	*	
ApproachDel:		18.9				50.1				19.2				xxxxxx		
Delay Adj:		1.00				1.00				1.00				xxxxx		
ApprAdjDel:		18.9				50.1				19.2				xxxxxx		
LOS by Appr:		C				F				C				*		
AllWayAvgQ:	0.8	1.6	0.0		6.2	6.2	6.2		0.7	0.0	1.8		0.0	0.0	0.0	

Note: Queue reported is the number of cars per lane.

Movement	WBL	WBR	NBT	NBR	SBL	SBT
Lane Configurations						
Ideal Flow (vphpl)	1700	1700	1800	1800	1700	1800
Grade (%)	-5%		-5%			0%
Total Lost time (s)	4.0		4.0		4.0	4.0
Lane Util. Factor	1.00		1.00		1.00	1.00
Frt	0.96		0.97		1.00	1.00
Flt Protected	0.97		1.00		0.95	1.00
Satd. Flow (prot)	1611		1799		1615	1800
Flt Permitted	0.97		1.00		0.58	1.00
Satd. Flow (perm)	1611		1799		990	1800
Volume (vph)	162	79	185	42	69	208
Peak-hour factor, PHF	0.69	0.69	0.81	0.81	0.69	0.69
Adj. Flow (vph)	235	114	228	52	100	301
RTOR Reduction (vph)	42	0	9	0	0	0
Lane Group Flow (vph)	307	0	271	0	100	301
Turn Type					Perm	
Protected Phases	8		2			6
Permitted Phases					6	
Actuated Green, G (s)	15.5		36.5		36.5	36.5
Effective Green, g (s)	15.5		36.5		36.5	36.5
Actuated g/C Ratio	0.26		0.61		0.61	0.61
Clearance Time (s)	4.0		4.0		4.0	4.0
Vehicle Extension (s)	3.0		3.0		3.0	3.0
Lane Grp Cap (vph)	416		1094		602	1095
v/s Ratio Prot	c0.19		0.15			c0.17
v/s Ratio Perm					0.10	
v/c Ratio	0.74		0.25		0.17	0.27
Uniform Delay, d1	20.4		5.4		5.1	5.5
Progression Factor	1.00		0.64		1.00	1.00
Incremental Delay, d2	6.7		0.5		0.6	0.6
Delay (s)	27.1		4.0		5.7	6.1
Level of Service	C		A		A	A
Approach Delay (s)	27.1		4.0			6.0
Approach LOS	C		A			A

Intersection Summary			
HCM Average Control Delay	12.6	HCM Level of Service	B
HCM Volume to Capacity ratio	0.41		
Actuated Cycle Length (s)	60.0	Sum of lost time (s)	8.0
Intersection Capacity Utilization	46.7%	ICU Level of Service	A
Analysis Period (min)	15		

c Critical Lane Group

Movement	EBL	EBT	WBT	WBR	SBL	SBR
Lane Configurations						
Ideal Flow (vphpl)	1700	1800	1800	1700	1700	1700
Grade (%)		0%	-2%		5%	
Total Lost time (s)	4.0	4.0	4.0	4.0	4.0	4.0
Lane Util. Factor	1.00	1.00	1.00	1.00	1.00	1.00
Frt	1.00	1.00	1.00	0.85	1.00	0.85
Flt Protected	0.95	1.00	1.00	1.00	0.95	1.00
Satd. Flow (prot)	1615	1800	1818	1459	1575	1409
Flt Permitted	0.95	1.00	1.00	1.00	0.95	1.00
Satd. Flow (perm)	1615	1800	1818	1459	1575	1409
Volume (vph)	58	314	560	169	207	163
Peak-hour factor, PHF	0.82	0.82	0.84	0.84	0.89	0.89
Adj. Flow (vph)	71	383	667	201	233	183
RTOR Reduction (vph)	0	0	0	120	0	129
Lane Group Flow (vph)	71	383	667	81	233	54
Turn Type	Prot			Perm		Perm
Protected Phases	7	4	8		6	
Permitted Phases				8		6
Actuated Green, G (s)	6.0	34.3	24.3	24.3	17.7	17.7
Effective Green, g (s)	6.0	34.3	24.3	24.3	17.7	17.7
Actuated g/C Ratio	0.10	0.57	0.41	0.41	0.29	0.29
Clearance Time (s)	4.0	4.0	4.0	4.0	4.0	4.0
Vehicle Extension (s)	3.0	3.0	3.0	3.0	3.0	3.0
Lane Grp Cap (vph)	162	1029	736	591	465	416
v/s Ratio Prot	0.04	c0.21	c0.37		c0.15	
v/s Ratio Perm				0.06		0.04
v/c Ratio	0.44	0.37	0.91	0.14	0.50	0.13
Uniform Delay, d1	25.4	7.0	16.8	11.2	17.5	15.5
Progression Factor	1.00	1.00	1.00	1.00	0.95	1.47
Incremental Delay, d2	1.9	0.2	14.7	0.1	3.4	0.6
Delay (s)	27.3	7.2	31.5	11.4	20.0	23.4
Level of Service	C	A	C	B	C	C
Approach Delay (s)		10.4	26.8		21.5	
Approach LOS		B	C		C	

Intersection Summary			
HCM Average Control Delay	21.3	HCM Level of Service	C
HCM Volume to Capacity ratio	0.70		
Actuated Cycle Length (s)	60.0	Sum of lost time (s)	12.0
Intersection Capacity Utilization	62.3%	ICU Level of Service	B
Analysis Period (min)	15		

c Critical Lane Group

Movement	EBL	EBT	EBR	WBL	WBT	WBR	NBL	NBT	NBR	SBL	SBT	SBR
Lane Configurations												
Ideal Flow (vphpl)	1800	1800	1800	1800	1800	1800	1800	1800	1800	1800	1800	1800
Total Lost time (s)	4.0	4.0		4.0	4.0			4.0			4.0	
Lane Util. Factor	1.00	1.00		1.00	1.00			1.00			1.00	
Frt	1.00	1.00		1.00	0.99			0.93			0.96	
Flt Protected	0.95	1.00		0.95	1.00			0.98			0.97	
Satd. Flow (prot)	1710	1794		1710	1779			1638			1677	
Flt Permitted	0.95	1.00		0.95	1.00			0.85			0.78	
Satd. Flow (perm)	1710	1794		1710	1779			1427			1355	
Volume (vph)	19	631	15	12	677	56	17	0	17	55	4	22
Peak-hour factor, PHF	0.83	0.83	0.83	0.96	0.96	0.96	0.81	0.81	0.81	0.79	0.79	0.79
Adj. Flow (vph)	23	760	18	12	705	58	21	0	21	70	5	28
RTOR Reduction (vph)	0	1	0	0	4	0	0	17	0	0	21	0
Lane Group Flow (vph)	23	777	0	12	759	0	0	25	0	0	82	0
Turn Type	Prot			Prot			Perm			Perm		
Protected Phases	7	4		3	8			2			6	
Permitted Phases							2			6		
Actuated Green, G (s)	1.5	24.5		1.5	24.5			10.3			10.3	
Effective Green, g (s)	1.5	24.5		1.5	24.5			10.3			10.3	
Actuated g/C Ratio	0.03	0.51		0.03	0.51			0.21			0.21	
Clearance Time (s)	4.0	4.0		4.0	4.0			4.0			4.0	
Vehicle Extension (s)	3.0	3.0		3.0	3.0			3.0			3.0	
Lane Grp Cap (vph)	53	910		53	902			304			289	
v/s Ratio Prot	c0.01	c0.43		0.01	0.43							
v/s Ratio Perm								0.02			c0.06	
v/c Ratio	0.43	0.85		0.23	0.84			0.08			0.28	
Uniform Delay, d1	23.0	10.3		22.8	10.2			15.2			15.9	
Progression Factor	1.00	1.00		1.00	1.00			1.00			1.00	
Incremental Delay, d2	5.6	7.8		2.2	7.1			0.1			0.5	
Delay (s)	28.6	18.2		25.0	17.4			15.3			16.4	
Level of Service	C	B		C	B			B			B	
Approach Delay (s)		18.5			17.5			15.3			16.4	
Approach LOS		B			B			B			B	

Intersection Summary			
HCM Average Control Delay	17.8	HCM Level of Service	B
HCM Volume to Capacity ratio	0.67		
Actuated Cycle Length (s)	48.3	Sum of lost time (s)	12.0
Intersection Capacity Utilization	56.2%	ICU Level of Service	B
Analysis Period (min)	15		
c Critical Lane Group			

Movement	EBL	EBT	WBT	WBR	SBL	SBR
Lane Configurations						
Ideal Flow (vphpl)	1800	1800	1800	1800	1800	1800
Total Lost time (s)	4.0	4.0	4.0	4.0	4.0	4.0
Lane Util. Factor	1.00	1.00	1.00	1.00	1.00	1.00
Frt	1.00	1.00	1.00	0.85	1.00	0.85
Flt Protected	0.95	1.00	1.00	1.00	0.95	1.00
Satd. Flow (prot)	1710	1800	1800	1530	1710	1530
Flt Permitted	0.95	1.00	1.00	1.00	0.95	1.00
Satd. Flow (perm)	1710	1800	1800	1530	1710	1530
Volume (vph)	140	504	717	260	260	140
Peak-hour factor, PHF	0.95	0.91	0.90	0.95	0.95	0.95
Adj. Flow (vph)	147	554	797	274	274	147
RTOR Reduction (vph)	0	0	0	113	0	113
Lane Group Flow (vph)	147	554	797	161	274	34
Turn Type	Prot			Perm		Perm
Protected Phases	7	4	8		6	
Permitted Phases				8		6
Actuated Green, G (s)	7.1	44.8	33.7	33.7	15.8	15.8
Effective Green, g (s)	7.1	44.8	33.7	33.7	15.8	15.8
Actuated g/C Ratio	0.10	0.65	0.49	0.49	0.23	0.23
Clearance Time (s)	4.0	4.0	4.0	4.0	4.0	4.0
Vehicle Extension (s)	3.0	3.0	3.0	3.0	3.0	3.0
Lane Grp Cap (vph)	177	1176	884	752	394	352
v/s Ratio Prot	c0.09	0.31	c0.44		c0.16	
v/s Ratio Perm				0.11		0.02
v/c Ratio	0.83	0.47	0.90	0.21	0.70	0.10
Uniform Delay, d1	30.2	6.0	15.9	9.9	24.2	20.8
Progression Factor	1.00	1.00	1.00	1.00	1.00	1.00
Incremental Delay, d2	26.8	0.3	12.3	0.1	5.3	0.1
Delay (s)	57.0	6.3	28.2	10.1	29.5	20.9
Level of Service	E	A	C	B	C	C
Approach Delay (s)		16.9	23.6		26.5	
Approach LOS		B	C		C	

Intersection Summary			
HCM Average Control Delay	22.0	HCM Level of Service	C
HCM Volume to Capacity ratio	0.84		
Actuated Cycle Length (s)	68.6	Sum of lost time (s)	12.0
Intersection Capacity Utilization	73.4%	ICU Level of Service	D
Analysis Period (min)	15		
c Critical Lane Group			

Movement	EBL	EBT	WBT	WBR	SBL	SBR
Lane Configurations						
Ideal Flow (vphpl)	1700	1800	1800	1800	1800	1700
Total Lost time (s)	4.0	4.0	4.0			4.0
Lane Util. Factor	1.00	1.00	1.00			1.00
Frt	1.00	1.00	1.00			0.86
Flt Protected	0.95	1.00	1.00			1.00
Satd. Flow (prot)	1615	1800	1800			1470
Flt Permitted	0.95	1.00	1.00			1.00
Satd. Flow (perm)	1615	1800	1800			1470
Volume (vph)	382	382	414	0	0	563
Peak-hour factor, PHF	0.86	0.85	0.89	1.00	1.00	0.76
Adj. Flow (vph)	444	449	465	0	0	741
RTOR Reduction (vph)	0	0	0	0	0	92
Lane Group Flow (vph)	444	449	465	0	0	649
Turn Type	Prot					Over
Protected Phases	5	2	6			5
Permitted Phases						
Actuated Green, G (s)	31.0	60.0	21.0			31.0
Effective Green, g (s)	31.0	60.0	21.0			31.0
Actuated g/C Ratio	0.52	1.00	0.35			0.52
Clearance Time (s)	4.0	4.0	4.0			4.0
Vehicle Extension (s)	3.0	3.0	3.0			3.0
Lane Grp Cap (vph)	834	1800	630			760
v/s Ratio Prot	0.27	0.25	c0.26			c0.44
v/s Ratio Perm						
v/c Ratio	0.53	0.25	0.74			0.85
Uniform Delay, d1	9.7	0.0	17.1			12.5
Progression Factor	1.00	1.00	0.52			1.00
Incremental Delay, d2	0.7	0.3	6.9			9.2
Delay (s)	10.3	0.3	15.8			21.7
Level of Service	B	A	B			C
Approach Delay (s)		5.3	15.8		21.7	
Approach LOS		A	B		C	

Intersection Summary			
HCM Average Control Delay	13.4	HCM Level of Service	B
HCM Volume to Capacity ratio	0.81		
Actuated Cycle Length (s)	60.0	Sum of lost time (s)	8.0
Intersection Capacity Utilization	68.6%	ICU Level of Service	C
Analysis Period (min)	15		
c Critical Lane Group			

Movement	WBL	WBR	NBT	NBR	SBL	SBT
Lane Configurations						
Sign Control	Stop		Free			Free
Grade	0%		0%			0%
Volume (veh/h)	0	163	382	0	204	563
Peak Hour Factor	1.00	0.52	0.86	1.00	0.60	0.76
Hourly flow rate (vph)	0	313	444	0	340	741
Pedestrians						
Lane Width (ft)						
Walking Speed (ft/s)						
Percent Blockage						
Right turn flare (veh)						
Median type	None					
Median storage veh)						
Upstream signal (ft)			158			
pX, platoon unblocked						
vC, conflicting volume	1865	444			444	
vC1, stage 1 conf vol						
vC2, stage 2 conf vol						
vCu, unblocked vol	1865	444			444	
tC, single (s)	6.4	6.2			4.1	
tC, 2 stage (s)						
tF (s)	3.5	3.3			2.2	
p0 queue free %	100	49			70	
cM capacity (veh/h)	57	618			1127	

Direction, Lane #	WB 1	NB 1	SB 1	SB 2
Volume Total	313	444	340	741
Volume Left	0	0	340	0
Volume Right	313	0	0	0
cSH	618	1700	1127	1700
Volume to Capacity	0.51	0.26	0.30	0.44
Queue Length 95th (ft)	72	0	32	0
Control Delay (s)	16.7	0.0	9.6	0.0
Lane LOS	C		A	
Approach Delay (s)	16.7	0.0	3.0	
Approach LOS	C			

Intersection Summary			
Average Delay	4.6		
Intersection Capacity Utilization	39.8%	ICU Level of Service	A
Analysis Period (min)	15		

Movement	EBL	EBT	WBT	WBR	SBL	SBR
Lane Configurations						
Ideal Flow (vphpl)	1800	1800	1800	1700	1700	1800
Total Lost time (s)		4.0	4.0	4.0	4.0	
Lane Util. Factor		1.00	1.00	1.00	1.00	
Frt		1.00	1.00	0.85	1.00	
Flt Protected		1.00	1.00	1.00	0.95	
Satd. Flow (prot)		1800	1800	1445	1615	
Flt Permitted		1.00	1.00	1.00	0.95	
Satd. Flow (perm)		1800	1800	1445	1615	
Volume (vph)	0	382	414	163	204	0
Peak-hour factor, PHF	1.00	0.85	0.89	0.52	0.60	1.00
Adj. Flow (vph)	0	449	465	313	340	0
RTOR Reduction (vph)	0	0	0	0	0	0
Lane Group Flow (vph)	0	449	465	313	340	0
Turn Type				Free		
Protected Phases		2	6		4	
Permitted Phases				Free		
Actuated Green, G (s)		35.2	35.2	60.0	16.8	
Effective Green, g (s)		35.2	35.2	60.0	16.8	
Actuated g/C Ratio		0.59	0.59	1.00	0.28	
Clearance Time (s)		4.0	4.0		4.0	
Vehicle Extension (s)		3.0	3.0		3.0	
Lane Grp Cap (vph)		1056	1056	1445	452	
v/s Ratio Prot		0.25	c0.26		c0.21	
v/s Ratio Perm				0.22		
v/c Ratio		0.43	0.44	0.22	0.75	
Uniform Delay, d1		6.8	6.9	0.0	19.7	
Progression Factor		1.00	1.00	1.00	1.00	
Incremental Delay, d2		1.2	1.3	0.3	6.9	
Delay (s)		8.1	8.2	0.3	26.6	
Level of Service		A	A	A	C	
Approach Delay (s)		8.1	5.1		26.6	
Approach LOS		A	A		C	

Intersection Summary			
HCM Average Control Delay	10.6	HCM Level of Service	B
HCM Volume to Capacity ratio	0.54		
Actuated Cycle Length (s)	60.0	Sum of lost time (s)	8.0
Intersection Capacity Utilization	42.3%	ICU Level of Service	A
Analysis Period (min)	15		
c Critical Lane Group			

Movement	EBL	EBT	WBT	WBR	SBL	SBR
Lane Configurations						
Ideal Flow (vphpl)	1700	1800	1800	1700	1800	1800
Total Lost time (s)	4.0	4.0	4.0	4.0	4.0	
Lane Util. Factor	1.00	1.00	1.00	1.00	1.00	
Frt	1.00	1.00	1.00	0.85	0.89	
Flt Protected	0.95	1.00	1.00	1.00	0.99	
Satd. Flow (prot)	1615	1800	1800	1445	1588	
Flt Permitted	0.95	1.00	1.00	1.00	0.99	
Satd. Flow (perm)	1615	1800	1800	1445	1588	
Volume (vph)	309	197	202	135	52	219
Peak-hour factor, PHF	0.80	0.80	0.85	0.85	0.82	0.82
Adj. Flow (vph)	386	246	238	159	63	267
RTOR Reduction (vph)	0	0	0	131	202	0
Lane Group Flow (vph)	386	246	238	28	128	0
Turn Type	Prot			Perm		
Protected Phases	7	4	8		6	
Permitted Phases				8		
Actuated Green, G (s)	16.3	29.0	8.7	8.7	11.8	
Effective Green, g (s)	16.3	29.0	8.7	8.7	11.8	
Actuated g/C Ratio	0.33	0.59	0.18	0.18	0.24	
Clearance Time (s)	4.0	4.0	4.0	4.0	4.0	
Vehicle Extension (s)	3.0	3.0	3.0	3.0	3.0	
Lane Grp Cap (vph)	539	1070	321	258	384	
v/s Ratio Prot	c0.24	0.14	c0.13		c0.08	
v/s Ratio Perm				0.02		
v/c Ratio	0.72	0.23	0.74	0.11	0.33	
Uniform Delay, d1	14.2	4.7	19.0	16.8	15.3	
Progression Factor	1.00	1.00	1.00	1.00	1.00	
Incremental Delay, d2	4.5	0.1	8.9	0.2	0.5	
Delay (s)	18.7	4.8	27.9	17.0	15.8	
Level of Service	B	A	C	B	B	
Approach Delay (s)		13.3	23.5		15.8	
Approach LOS		B	C		B	

Intersection Summary			
HCM Average Control Delay	16.9	HCM Level of Service	B
HCM Volume to Capacity ratio	0.60		
Actuated Cycle Length (s)	48.8	Sum of lost time (s)	12.0
Intersection Capacity Utilization	57.7%	ICU Level of Service	B
Analysis Period (min)	15		
c Critical Lane Group			

YEAR 2030 WITH PROJECT WITH IMPROVEMENTS CONDITIONS

Church of the Woods
Year 2030 With Project With Improvements
Saturday Peak Hour

Level Of Service Computation Report
2000 HCM Unsignalized Method (Base Volume Alternative)

Intersection #1 North Road/State Route 189

Average Delay (sec/veh): 8.3 Worst Case Level Of Service: C[22.8]

Approach:	North Bound					South Bound					East Bound					West Bound				
Movement:	L	-	T	-	R	L	-	T	-	R	L	-	T	-	R	L	-	T	-	R
Control:	Stop Sign					Stop Sign					Uncontrolled					Uncontrolled				
Rights:	Include					Include					Include					Include				
Lanes:	0	0	0	0	0	1	0	0	0	1	0	1	0	0	0	0	0	1	0	1
Volume Module:																				
Base Vol:	0	0	0			287	0			87	64	214		0		0	205			239
Growth Adj:	1.00	1.00	1.00			1.00	1.00			1.00	1.00	1.00		1.00		1.00	1.00			1.00
Initial Bse:	0	0	0			287	0			87	64	214		0		0	205			239
User Adj:	1.00	1.00	1.00			1.00	1.00			1.00	1.00	1.00		1.00		1.00	1.00			1.00
PHF Adj:	0.95	0.95	0.95			0.95	0.95			0.95	0.95	0.95		0.95		0.95	0.95			0.95
PHF Volume:	0	0	0			302	0			92	67	225		0		0	216			252
Reduct Vol:	0	0	0			0	0			0	0	0		0		0	0			0
Final Vol.:	0	0	0			302	0			92	67	225		0		0	216			252
Critical Gap Module:																				
Critical Gp:	xxxxx	xxxx	xxxxx			6.4	xxxx			6.2	4.1	xxxx	xxxxx	xxxxx		xxxx	xxxxx			
FollowUpTim:	xxxxx	xxxx	xxxxx			3.5	xxxx			3.3	2.2	xxxx	xxxxx	xxxxx		xxxx	xxxxx			
Capacity Module:																				
Cnflict Vol:	xxxx	xxxx	xxxxx			576	xxxx			216	467	xxxx	xxxxx	xxxx		xxxx	xxxxx			
Potent Cap.:	xxxx	xxxx	xxxxx			483	xxxx			829	1105	xxxx	xxxxx	xxxx		xxxx	xxxxx			
Move Cap.:	xxxx	xxxx	xxxxx			459	xxxx			829	1105	xxxx	xxxxx	xxxx		xxxx	xxxxx			
Volume/Cap:	xxxx	xxxx	xxxx			0.66	xxxx			0.11	0.06	xxxx	xxxx	xxxx		xxxx	xxxx			
Level Of Service Module:																				
2Way95thQ:	xxxx	xxxx	xxxxx			4.7	xxxx			0.4	0.2	xxxx	xxxxx	xxxx		xxxx	xxxxx			
Control Del:	xxxxx	xxxx	xxxxx			26.7	xxxx			9.9	8.5	xxxx	xxxxx	xxxxx		xxxx	xxxxx			
LOS by Move:	*	*	*			D	*			A	A	*	*	*		*	*			
Movement:	LT	-	LTR	-	RT	LT	-	LTR	-	RT	LT	-	LTR	-	RT	LT	-	LTR	-	RT
Shared Cap.:	xxxx	xxxx	xxxxx			xxxx	xxxx	xxxxx			xxxx	xxxx	xxxxx			xxxx	xxxx	xxxxx		
SharedQueue:	xxxxx	xxxx	xxxxx			xxxxx	xxxx	xxxxx			0.2	xxxx	xxxxx	xxxxx		xxxx	xxxxx			
Shrd ConDel:	xxxxx	xxxx	xxxxx			xxxxx	xxxx	xxxxx			8.5	xxxx	xxxxx	xxxxx		xxxx	xxxxx			
Shared LOS:	*	*	*			*	*	*			A	*	*	*		*	*			
ApproachDel:	xxxxxx					22.8					xxxxxx					xxxxxx				
ApproachLOS:	*					C					*					*				

Note: Queue reported is the number of cars per lane.

Movement	EBL	EBT	WBT	WBR	SBL	SBR
Lane Configurations						
Ideal Flow (vphpl)	1800	1900	1900	1900	1800	1800
Total Lost time (s)	2.0	2.0	2.0		2.0	2.0
Lane Util. Factor	1.00	1.00	1.00		1.00	1.00
Frt	1.00	1.00	0.90		1.00	0.85
Flt Protected	0.95	1.00	1.00		0.95	1.00
Satd. Flow (prot)	1710	1900	1714		1710	1530
Flt Permitted	0.95	1.00	1.00		0.95	1.00
Satd. Flow (perm)	1710	1900	1714		1710	1530
Volume (vph)	203	270	110	293	547	416
Peak-hour factor, PHF	0.95	0.95	0.95	0.95	0.95	0.95
Adj. Flow (vph)	214	284	116	308	576	438
RTOR Reduction (vph)	0	0	159	0	0	234
Lane Group Flow (vph)	214	284	265	0	576	204
Turn Type	Prot					Perm
Protected Phases	7	4	8		6	
Permitted Phases						6
Actuated Green, G (s)	10.0	26.0	12.0		26.0	26.0
Effective Green, g (s)	12.0	28.0	14.0		28.0	28.0
Actuated g/C Ratio	0.20	0.47	0.23		0.47	0.47
Clearance Time (s)	4.0	4.0	4.0		4.0	4.0
Lane Grp Cap (vph)	342	887	400		798	714
v/s Ratio Prot	c0.13	0.15	c0.15		c0.34	
v/s Ratio Perm						0.13
v/c Ratio	0.63	0.32	0.66		0.72	0.29
Uniform Delay, d1	21.9	10.0	20.9		12.9	9.8
Progression Factor	1.00	1.00	1.00		1.00	1.00
Incremental Delay, d2	8.4	1.0	8.3		5.6	1.0
Delay (s)	30.3	11.0	29.2		18.5	10.9
Level of Service	C	B	C		B	B
Approach Delay (s)		19.3	29.2		15.2	
Approach LOS		B	C		B	

Intersection Summary			
HCM Average Control Delay	19.3	HCM Level of Service	B
HCM Volume to Capacity ratio	0.67		
Actuated Cycle Length (s)	60.0	Sum of lost time (s)	6.0
Intersection Capacity Utilization	77.7%	ICU Level of Service	D
Analysis Period (min)	15		

c Critical Lane Group

Movement	EBL	EBR	NBL	NBT	SBT	SBR
Lane Configurations						
Ideal Flow (vphpl)	1800	1800	1800	1900	1900	1900
Total Lost time (s)	2.0	2.0	2.0	2.0	2.0	
Lane Util. Factor	1.00	1.00	1.00	1.00	1.00	
Frt	1.00	0.85	1.00	1.00	0.98	
Flt Protected	0.95	1.00	0.95	1.00	1.00	
Satd. Flow (prot)	1710	1530	1710	1900	1853	
Flt Permitted	0.95	1.00	0.95	1.00	1.00	
Satd. Flow (perm)	1710	1530	1710	1900	1853	
Volume (vph)	401	419	303	580	433	97
Peak-hour factor, PHF	0.95	0.95	0.95	0.95	0.95	0.95
Adj. Flow (vph)	422	441	319	611	456	102
RTOR Reduction (vph)	0	92	0	0	10	0
Lane Group Flow (vph)	422	349	319	611	548	0
Turn Type		pm+ov	Prot			
Protected Phases	4	5	5	2	6	
Permitted Phases		4				
Actuated Green, G (s)	19.9	36.2	16.3	43.8	23.5	
Effective Green, g (s)	21.9	40.2	18.3	45.8	25.5	
Actuated g/C Ratio	0.31	0.56	0.26	0.64	0.36	
Clearance Time (s)	4.0	4.0	4.0	4.0	4.0	
Vehicle Extension (s)	3.0	3.0	3.0	3.0	3.0	
Lane Grp Cap (vph)	522	901	436	1214	659	
v/s Ratio Prot	c0.25	0.10	c0.19	0.32	c0.30	
v/s Ratio Perm		0.13				
v/c Ratio	0.81	0.39	0.73	0.50	0.83	
Uniform Delay, d1	23.0	8.8	24.5	6.9	21.1	
Progression Factor	1.00	1.00	1.00	1.00	1.00	
Incremental Delay, d2	9.0	0.3	6.2	0.3	8.8	
Delay (s)	31.9	9.1	30.7	7.2	29.9	
Level of Service	C	A	C	A	C	
Approach Delay (s)	20.3			15.3	29.9	
Approach LOS	C			B	C	

Intersection Summary			
HCM Average Control Delay	20.6	HCM Level of Service	C
HCM Volume to Capacity ratio	0.78		
Actuated Cycle Length (s)	71.7	Sum of lost time (s)	6.0
Intersection Capacity Utilization	79.9%	ICU Level of Service	D
Analysis Period (min)	15		
c Critical Lane Group			

Movement	EBL	EBT	WBT	WBR	SBL	SBR
Lane Configurations						
Ideal Flow (vphpl)	1800	1900	1900	1900	1800	1800
Total Lost time (s)	2.0	2.0	2.0		2.0	2.0
Lane Util. Factor	1.00	1.00	1.00		1.00	1.00
Frt	1.00	1.00	0.95		1.00	0.85
Flt Protected	0.95	1.00	1.00		0.95	1.00
Satd. Flow (prot)	1710	1900	1802		1710	1530
Flt Permitted	0.95	1.00	1.00		0.95	1.00
Satd. Flow (perm)	1710	1900	1802		1710	1530
Volume (vph)	499	417	285	177	235	471
Peak-hour factor, PHF	0.95	0.95	0.95	0.95	0.95	0.95
Adj. Flow (vph)	525	439	300	186	247	496
RTOR Reduction (vph)	0	0	32	0	0	136
Lane Group Flow (vph)	525	439	454	0	247	360
Turn Type	Prot					pm+ov
Protected Phases	7	4	8		6	7
Permitted Phases						6
Actuated Green, G (s)	21.7	44.1	18.4		12.5	34.2
Effective Green, g (s)	23.7	46.1	20.4		14.5	38.2
Actuated g/C Ratio	0.37	0.71	0.32		0.22	0.59
Clearance Time (s)	4.0	4.0	4.0		4.0	4.0
Vehicle Extension (s)	3.0	3.0	3.0		3.0	3.0
Lane Grp Cap (vph)	627	1356	569		384	952
v/s Ratio Prot	c0.31	0.23	c0.25		c0.14	0.14
v/s Ratio Perm						0.10
v/c Ratio	0.84	0.32	0.80		0.64	0.38
Uniform Delay, d1	18.7	3.4	20.2		22.7	6.9
Progression Factor	1.00	1.00	1.00		1.00	1.00
Incremental Delay, d2	9.5	0.1	7.7		3.7	0.3
Delay (s)	28.2	3.6	27.9		26.4	7.2
Level of Service	C	A	C		C	A
Approach Delay (s)		17.0	27.9		13.6	
Approach LOS		B	C		B	

Intersection Summary			
HCM Average Control Delay	18.2	HCM Level of Service	B
HCM Volume to Capacity ratio	0.76		
Actuated Cycle Length (s)	64.6	Sum of lost time (s)	6.0
Intersection Capacity Utilization	78.7%	ICU Level of Service	D
Analysis Period (min)	15		
c Critical Lane Group			

Movement	WBL	WBR	NBT	NBR	SBL	SBT
Lane Configurations						
Ideal Flow (vphpl)	1800	1800	1800	1900	1800	1900
Grade (%)	-5%		-5%			0%
Total Lost time (s)	2.0		2.0		2.0	2.0
Lane Util. Factor	1.00		1.00		1.00	1.00
Frt	0.93		0.97		1.00	1.00
Flt Protected	0.98		1.00		0.95	1.00
Satd. Flow (prot)	1673		1783		1710	1900
Flt Permitted	0.98		1.00		0.51	1.00
Satd. Flow (perm)	1673		1783		924	1900
Volume (vph)	93	107	262	86	131	355
Peak-hour factor, PHF	0.95	0.95	0.95	0.95	0.95	0.95
Adj. Flow (vph)	98	113	276	91	138	374
RTOR Reduction (vph)	89	0	12	0	0	0
Lane Group Flow (vph)	122	0	355	0	138	374
Turn Type					Perm	
Protected Phases	8		2			6
Permitted Phases					6	
Actuated Green, G (s)	10.9		41.1		41.1	41.1
Effective Green, g (s)	12.9		43.1		43.1	43.1
Actuated g/C Ratio	0.22		0.72		0.72	0.72
Clearance Time (s)	4.0		4.0		4.0	4.0
Vehicle Extension (s)	3.0		3.0		3.0	3.0
Lane Grp Cap (vph)	360		1281		664	1365
v/s Ratio Prot	c0.07		c0.20			0.20
v/s Ratio Perm					0.15	
v/c Ratio	0.34		0.28		0.21	0.27
Uniform Delay, d1	19.9		3.0		2.8	3.0
Progression Factor	1.00		0.53		1.00	1.00
Incremental Delay, d2	0.6		0.5		0.7	0.5
Delay (s)	20.5		2.1		3.5	3.5
Level of Service	C		A		A	A
Approach Delay (s)	20.5		2.1			3.5
Approach LOS	C		A			A

Intersection Summary			
HCM Average Control Delay	6.3	HCM Level of Service	A
HCM Volume to Capacity ratio	0.29		
Actuated Cycle Length (s)	60.0	Sum of lost time (s)	4.0
Intersection Capacity Utilization	50.8%	ICU Level of Service	A
Analysis Period (min)	15		

c Critical Lane Group

Movement	EBL	EBT	WBT	WBR	SBL	SBR
Lane Configurations						
Ideal Flow (vphpl)	1800	1900	1900	1800	1800	1800
Grade (%)		0%	-2%		5%	
Total Lost time (s)	2.0	2.0	2.0	2.0	2.0	2.0
Lane Util. Factor	1.00	1.00	1.00	1.00	1.00	1.00
Frt	1.00	1.00	1.00	0.85	1.00	0.85
Flt Protected	0.95	1.00	1.00	1.00	0.95	1.00
Satd. Flow (prot)	1710	1900	1919	1545	1667	1492
Flt Permitted	0.95	1.00	1.00	1.00	0.95	1.00
Satd. Flow (perm)	1710	1900	1919	1545	1667	1492
Volume (vph)	148	568	565	200	331	118
Peak-hour factor, PHF	0.95	0.95	0.95	0.95	0.95	0.95
Adj. Flow (vph)	156	598	595	211	348	124
RTOR Reduction (vph)	0	0	0	116	0	89
Lane Group Flow (vph)	156	598	595	95	348	35
Turn Type	Prot			Perm		Perm
Protected Phases	5	2	6		4	
Permitted Phases				6		4
Actuated Green, G (s)	8.0	37.0	25.0	25.0	15.0	15.0
Effective Green, g (s)	10.0	39.0	27.0	27.0	17.0	17.0
Actuated g/C Ratio	0.17	0.65	0.45	0.45	0.28	0.28
Clearance Time (s)	4.0	4.0	4.0	4.0	4.0	4.0
Vehicle Extension (s)	3.0	3.0	3.0	3.0	3.0	3.0
Lane Grp Cap (vph)	285	1235	864	695	472	423
v/s Ratio Prot	c0.09	0.31	c0.31		c0.21	
v/s Ratio Perm				0.06		0.02
v/c Ratio	0.55	0.48	0.69	0.14	0.74	0.08
Uniform Delay, d1	22.9	5.4	13.2	9.7	19.5	15.8
Progression Factor	1.00	1.00	1.00	1.00	0.86	0.65
Incremental Delay, d2	2.1	1.4	4.5	0.4	9.6	0.4
Delay (s)	25.1	6.7	17.6	10.1	26.3	10.6
Level of Service	C	A	B	B	C	B
Approach Delay (s)		10.5	15.6		22.2	
Approach LOS		B	B		C	

Intersection Summary			
HCM Average Control Delay	15.3	HCM Level of Service	B
HCM Volume to Capacity ratio	0.66		
Actuated Cycle Length (s)	60.0	Sum of lost time (s)	6.0
Intersection Capacity Utilization	67.7%	ICU Level of Service	C
Analysis Period (min)	15		

c Critical Lane Group

Movement	EBL	EBT	EBR	WBL	WBT	WBR	NBL	NBT	NBR	SBL	SBT	SBR
Lane Configurations												
Ideal Flow (vphpl)	1800	1900	1900	1800	1900	1900	1900	1900	1900	1900	1900	1900
Total Lost time (s)	2.0	2.0		2.0	2.0			2.0			2.0	
Lane Util. Factor	1.00	1.00		1.00	1.00			1.00			1.00	
Frt	1.00	1.00		1.00	0.99			0.90			0.94	
Flt Protected	0.95	1.00		0.95	1.00			0.99			0.97	
Satd. Flow (prot)	1710	1899		1710	1886			1682			1743	
Flt Permitted	0.95	1.00		0.95	1.00			0.95			0.84	
Satd. Flow (perm)	1710	1899		1710	1886			1623			1499	
Volume (vph)	82	971	2	16	883	47	2	0	7	76	0	53
Peak-hour factor, PHF	0.95	0.95	0.95	0.95	0.95	0.95	0.95	0.95	0.95	0.95	0.95	0.95
Adj. Flow (vph)	86	1022	2	17	929	49	2	0	7	80	0	56
RTOR Reduction (vph)	0	0	0	0	2	0	0	6	0	0	29	0
Lane Group Flow (vph)	86	1024	0	17	976	0	0	3	0	0	107	0
Turn Type	Prot			Prot			Perm			Perm		
Protected Phases	7	4		3	8			2			6	
Permitted Phases							2			6		
Actuated Green, G (s)	7.2	46.6		1.7	41.1			11.1			11.1	
Effective Green, g (s)	9.2	48.6		3.7	43.1			13.1			13.1	
Actuated g/C Ratio	0.13	0.68		0.05	0.60			0.18			0.18	
Clearance Time (s)	4.0	4.0		4.0	4.0			4.0			4.0	
Vehicle Extension (s)	3.0	3.0		3.0	3.0			3.0			3.0	
Lane Grp Cap (vph)	220	1293		89	1138			298			275	
v/s Ratio Prot	c0.05	c0.54		0.01	c0.52							
v/s Ratio Perm								0.00			c0.07	
v/c Ratio	0.39	0.79		0.19	0.86			0.01			0.39	
Uniform Delay, d1	28.5	7.9		32.4	11.6			23.8			25.6	
Progression Factor	1.00	1.00		1.00	1.00			1.00			1.00	
Incremental Delay, d2	1.2	3.4		1.0	6.6			0.0			0.9	
Delay (s)	29.7	11.3		33.5	18.2			23.9			26.5	
Level of Service	C	B		C	B			C			C	
Approach Delay (s)		12.7			18.4			23.9			26.5	
Approach LOS		B			B			C			C	

Intersection Summary			
HCM Average Control Delay	16.1	HCM Level of Service	B
HCM Volume to Capacity ratio	0.71		
Actuated Cycle Length (s)	71.4	Sum of lost time (s)	8.0
Intersection Capacity Utilization	83.7%	ICU Level of Service	E
Analysis Period (min)	15		
c Critical Lane Group			

Movement	EBL	EBT	WBT	WBR	SBL	SBR
Lane Configurations						
Ideal Flow (vphpl)	1800	1900	1900	1800	1800	1800
Total Lost time (s)	2.0	2.0	2.0	2.0	2.0	2.0
Lane Util. Factor	1.00	1.00	1.00	1.00	1.00	1.00
Frt	1.00	1.00	1.00	0.85	1.00	0.85
Flt Protected	0.95	1.00	1.00	1.00	0.95	1.00
Satd. Flow (prot)	1710	1900	1900	1530	1710	1530
Flt Permitted	0.95	1.00	1.00	1.00	0.95	1.00
Satd. Flow (perm)	1710	1900	1900	1530	1710	1530
Volume (vph)	10	1176	1011	18	20	11
Peak-hour factor, PHF	0.95	0.95	0.95	0.95	0.95	0.95
Adj. Flow (vph)	11	1238	1064	19	21	12
RTOR Reduction (vph)	0	0	0	5	0	10
Lane Group Flow (vph)	11	1238	1064	14	21	2
Turn Type	Prot			Perm		Perm
Protected Phases	7	4	8		6	
Permitted Phases				8		6
Actuated Green, G (s)	1.6	47.9	42.3	42.3	10.7	10.7
Effective Green, g (s)	3.6	49.9	44.3	44.3	12.7	12.7
Actuated g/C Ratio	0.05	0.75	0.67	0.67	0.19	0.19
Clearance Time (s)	4.0	4.0	4.0	4.0	4.0	4.0
Vehicle Extension (s)	3.0	3.0	3.0	3.0	3.0	3.0
Lane Grp Cap (vph)	92	1424	1264	1018	326	292
v/s Ratio Prot	0.01	c0.65	0.56		c0.01	
v/s Ratio Perm				0.01		0.00
v/c Ratio	0.12	0.87	0.84	0.01	0.06	0.01
Uniform Delay, d1	30.0	6.0	8.5	3.8	22.1	21.8
Progression Factor	1.00	1.00	1.00	1.00	1.00	1.00
Incremental Delay, d2	0.6	5.9	5.2	0.0	0.4	0.0
Delay (s)	30.6	11.9	13.7	3.8	22.5	21.9
Level of Service	C	B	B	A	C	C
Approach Delay (s)		12.1	13.6		22.3	
Approach LOS		B	B		C	

Intersection Summary			
HCM Average Control Delay	12.9	HCM Level of Service	B
HCM Volume to Capacity ratio	0.70		
Actuated Cycle Length (s)	66.6	Sum of lost time (s)	4.0
Intersection Capacity Utilization	76.9%	ICU Level of Service	D
Analysis Period (min)	15		
c Critical Lane Group			

Movement	EBL	EBT	WBT	WBR	SBL	SBR
Lane Configurations						
Ideal Flow (vphpl)	1800	1900	1900	1900	1900	1900
Total Lost time (s)	2.0	2.0	2.0			2.0
Lane Util. Factor	1.00	1.00	1.00			1.00
Frt	1.00	1.00	1.00			0.86
Flt Protected	0.95	1.00	1.00			1.00
Satd. Flow (prot)	1710	1900	1900			1644
Flt Permitted	0.95	1.00	1.00			1.00
Satd. Flow (perm)	1710	1900	1900			1644
Volume (vph)	576	620	441	0	0	588
Peak-hour factor, PHF	0.95	0.95	0.95	0.95	0.95	0.95
Adj. Flow (vph)	606	653	464	0	0	619
RTOR Reduction (vph)	0	0	0	0	0	108
Lane Group Flow (vph)	606	653	464	0	0	511
Turn Type	Prot					Over
Protected Phases	5	2	6			5
Permitted Phases						
Actuated Green, G (s)	42.0	80.0	30.0			42.0
Effective Green, g (s)	44.0	80.0	32.0			44.0
Actuated g/C Ratio	0.55	1.00	0.40			0.55
Clearance Time (s)	4.0	4.0	4.0			4.0
Vehicle Extension (s)	3.0	3.0	3.0			3.0
Lane Grp Cap (vph)	941	1900	760			904
v/s Ratio Prot	c0.35	0.34	c0.24			0.31
v/s Ratio Perm						
v/c Ratio	0.64	0.34	0.61			0.57
Uniform Delay, d1	12.5	0.0	19.1			11.8
Progression Factor	1.00	1.00	0.72			1.00
Incremental Delay, d2	1.5	0.5	3.5			0.8
Delay (s)	14.1	0.5	17.3			12.6
Level of Service	B	A	B			B
Approach Delay (s)		7.0	17.3		12.6	
Approach LOS		A	B		B	

Intersection Summary			
HCM Average Control Delay	10.5	HCM Level of Service	B
HCM Volume to Capacity ratio	0.62		
Actuated Cycle Length (s)	80.0	Sum of lost time (s)	4.0
Intersection Capacity Utilization	66.3%	ICU Level of Service	C
Analysis Period (min)	15		
c Critical Lane Group			

Movement	WBL	WBR	NBT	NBR	SBL	SBT
Lane Configurations						
Sign Control	Stop		Free			Free
Grade	0%		0%			0%
Volume (veh/h)	0	274	576	0	280	588
Peak Hour Factor	0.95	0.95	0.95	0.95	0.95	0.95
Hourly flow rate (vph)	0	288	606	0	295	619
Pedestrians						
Lane Width (ft)						
Walking Speed (ft/s)						
Percent Blockage						
Right turn flare (veh)						
Median type	None					
Median storage veh)						
Upstream signal (ft)			158			
pX, platoon unblocked						
vC, conflicting volume	1815	606			606	
vC1, stage 1 conf vol						
vC2, stage 2 conf vol						
vCu, unblocked vol	1815	606			606	
tC, single (s)	6.4	6.2			4.1	
tC, 2 stage (s)						
tF (s)	3.5	3.3			2.2	
p0 queue free %	100	42			70	
cM capacity (veh/h)	61	501			982	

Direction, Lane #	WB 1	NB 1	SB 1	SB 2
Volume Total	288	606	295	619
Volume Left	0	0	295	0
Volume Right	288	0	0	0
cSH	501	1700	982	1700
Volume to Capacity	0.58	0.36	0.30	0.36
Queue Length 95th (ft)	90	0	32	0
Control Delay (s)	21.5	0.0	10.2	0.0
Lane LOS	C		B	
Approach Delay (s)	21.5	0.0	3.3	
Approach LOS	C			

Intersection Summary			
Average Delay	5.1		
Intersection Capacity Utilization	53.9%	ICU Level of Service	A
Analysis Period (min)	15		

Movement	EBL	EBT	WBT	WBR	SBL	SBR
Lane Configurations						
Ideal Flow (vphpl)	1900	1900	1900	1900	1900	1900
Total Lost time (s)		2.0	2.0	2.0	2.0	
Lane Util. Factor		1.00	1.00	1.00	1.00	
Frt		1.00	1.00	0.85	1.00	
Flt Protected		1.00	1.00	1.00	0.95	
Satd. Flow (prot)		1900	1900	1615	1805	
Flt Permitted		1.00	1.00	1.00	0.95	
Satd. Flow (perm)		1900	1900	1615	1805	
Volume (vph)	0	620	441	274	280	0
Peak-hour factor, PHF	0.95	0.95	0.95	0.95	0.95	0.95
Adj. Flow (vph)	0	653	464	288	295	0
RTOR Reduction (vph)	0	0	0	0	0	0
Lane Group Flow (vph)	0	653	464	288	295	0
Turn Type				Free		
Protected Phases		2	6		4	
Permitted Phases				Free		
Actuated Green, G (s)		54.6	54.6	80.0	17.4	
Effective Green, g (s)		56.6	56.6	80.0	19.4	
Actuated g/C Ratio		0.71	0.71	1.00	0.24	
Clearance Time (s)		4.0	4.0		4.0	
Vehicle Extension (s)		3.0	3.0		3.0	
Lane Grp Cap (vph)		1344	1344	1615	438	
v/s Ratio Prot		c0.34	0.24		c0.16	
v/s Ratio Perm				0.18		
v/c Ratio		0.49	0.35	0.18	0.67	
Uniform Delay, d1		5.2	4.5	0.0	27.4	
Progression Factor		1.00	1.00	1.00	1.00	
Incremental Delay, d2		1.2	0.7	0.2	4.1	
Delay (s)		6.4	5.2	0.2	31.5	
Level of Service		A	A	A	C	
Approach Delay (s)		6.4	3.3		31.5	
Approach LOS		A	A		C	

Intersection Summary			
HCM Average Control Delay	9.4	HCM Level of Service	A
HCM Volume to Capacity ratio	0.53		
Actuated Cycle Length (s)	80.0	Sum of lost time (s)	4.0
Intersection Capacity Utilization	54.8%	ICU Level of Service	A
Analysis Period (min)	15		
c Critical Lane Group			

Movement	EBL	EBT	WBT	WBR	SBL	SBR
Lane Configurations						
Ideal Flow (vphpl)	1800	1900	1900	1800	1800	1800
Total Lost time (s)	2.0	2.0	2.0	2.0	2.0	2.0
Lane Util. Factor	1.00	1.00	1.00	1.00	1.00	1.00
Frt	1.00	1.00	1.00	0.85	1.00	0.85
Flt Protected	0.95	1.00	1.00	1.00	0.95	1.00
Satd. Flow (prot)	1710	1900	1900	1530	1710	1530
Flt Permitted	0.95	1.00	1.00	1.00	0.95	1.00
Satd. Flow (perm)	1710	1900	1900	1530	1710	1530
Volume (vph)	442	395	336	159	150	257
Peak-hour factor, PHF	0.95	0.95	0.95	0.95	0.95	0.95
Adj. Flow (vph)	465	416	354	167	158	271
RTOR Reduction (vph)	0	0	0	120	0	205
Lane Group Flow (vph)	465	416	354	47	158	66
Turn Type	Prot			Perm		Perm
Protected Phases	7	4	8		6	
Permitted Phases				8		6
Actuated Green, G (s)	17.9	35.4	13.5	13.5	11.2	11.2
Effective Green, g (s)	19.9	37.4	15.5	15.5	13.2	13.2
Actuated g/C Ratio	0.36	0.68	0.28	0.28	0.24	0.24
Clearance Time (s)	4.0	4.0	4.0	4.0	4.0	4.0
Vehicle Extension (s)	3.0	3.0	3.0	3.0	3.0	3.0
Lane Grp Cap (vph)	623	1301	539	434	413	370
v/s Ratio Prot	c0.27	0.22	c0.19		c0.09	
v/s Ratio Perm				0.03		0.04
v/c Ratio	0.75	0.32	0.66	0.11	0.38	0.18
Uniform Delay, d1	15.1	3.5	17.2	14.4	17.3	16.4
Progression Factor	1.00	1.00	1.00	1.00	1.00	1.00
Incremental Delay, d2	4.9	0.1	2.9	0.1	2.7	1.0
Delay (s)	20.0	3.6	20.1	14.6	20.0	17.4
Level of Service	C	A	C	B	B	B
Approach Delay (s)		12.3	18.3		18.4	
Approach LOS		B	B		B	

Intersection Summary			
HCM Average Control Delay	15.4	HCM Level of Service	B
HCM Volume to Capacity ratio	0.60		
Actuated Cycle Length (s)	54.6	Sum of lost time (s)	6.0
Intersection Capacity Utilization	62.3%	ICU Level of Service	B
Analysis Period (min)	15		
c Critical Lane Group			

Church of the Woods
Year 2030 With Project With Improvements
Sunday Peak Hour

Level Of Service Computation Report
2000 HCM Unsignalized Method (Base Volume Alternative)

Intersection #1 North Road/State Route 189

Average Delay (sec/veh): 5.1 Worst Case Level Of Service: B[13.1]

Approach:	North Bound			South Bound			East Bound			West Bound		
Movement:	L	T	R	L	T	R	L	T	R	L	T	R
Control:	Stop Sign			Stop Sign			Uncontrolled			Uncontrolled		
Rights:	Include			Include			Include			Include		
Lanes:	0 0 0 0 0			1 0 0 0 1			0 1 0 0 0			0 0 1 0 1		
Volume Module:												
Base Vol:	0	0	0	174	0	88	62	105	0	0	195	153
Growth Adj:	1.00	1.00	1.00	1.00	1.00	1.00	1.00	1.00	1.00	1.00	1.00	1.00
Initial Bse:	0	0	0	174	0	88	62	105	0	0	195	153
User Adj:	1.00	1.00	1.00	1.00	1.00	1.00	1.00	1.00	1.00	1.00	1.00	1.00
PHF Adj:	0.95	0.95	0.95	0.95	0.95	0.95	0.95	0.95	0.95	0.95	0.95	0.95
PHF Volume:	0	0	0	183	0	93	65	111	0	0	205	161
Reduct Vol:	0	0	0	0	0	0	0	0	0	0	0	0
Final Vol.:	0	0	0	183	0	93	65	111	0	0	205	161
Critical Gap Module:												
Critical Gp:	xxxxx	xxxx	xxxxx	6.4	xxxx	6.2	4.1	xxxx	xxxxx	xxxxx	xxxx	xxxxx
FollowUpTim:	xxxxx	xxxx	xxxxx	3.5	xxxx	3.3	2.2	xxxx	xxxxx	xxxxx	xxxx	xxxxx
Capacity Module:												
Cnflict Vol:	xxxx	xxxx	xxxxx	446	xxxx	205	366	xxxx	xxxxx	xxxx	xxxx	xxxxx
Potent Cap.:	xxxx	xxxx	xxxxx	573	xxxx	840	1203	xxxx	xxxxx	xxxx	xxxx	xxxxx
Move Cap.:	xxxx	xxxx	xxxxx	549	xxxx	840	1203	xxxx	xxxxx	xxxx	xxxx	xxxxx
Volume/Cap:	xxxx	xxxx	xxxx	0.33	xxxx	0.11	0.05	xxxx	xxxx	xxxx	xxxx	xxxx
Level Of Service Module:												
2Way95thQ:	xxxx	xxxx	xxxxx	1.5	xxxx	0.4	0.2	xxxx	xxxxx	xxxx	xxxx	xxxxx
Control Del:	xxxxx	xxxx	xxxxx	14.8	xxxx	9.8	8.2	xxxx	xxxxx	xxxxx	xxxx	xxxxx
LOS by Move:	*	*	*	B	*	A	A	*	*	*	*	*
Movement:	LT	LTR	RT	LT	LTR	RT	LT	LTR	RT	LT	LTR	RT
Shared Cap.:	xxxx	xxxx	xxxxx	xxxx	xxxx	xxxxx	xxxx	xxxx	xxxxx	xxxx	xxxx	xxxxx
SharedQueue:	xxxxx	xxxx	xxxxx	xxxxx	xxxx	xxxxx	0.2	xxxx	xxxxx	xxxxx	xxxx	xxxxx
Shrd ConDel:	xxxxx	xxxx	xxxxx	xxxxx	xxxx	xxxxx	8.2	xxxx	xxxxx	xxxxx	xxxx	xxxxx
Shared LOS:	*	*	*	*	*	*	A	*	*	*	*	*
ApproachDel:	xxxxxx			13.1			xxxxxx			xxxxxx		
ApproachLOS:	*			B			*			*		

Note: Queue reported is the number of cars per lane.

Movement	EBL	EBT	WBT	WBR	SBL	SBR
Lane Configurations						
Ideal Flow (vphpl)	1800	1900	1900	1900	1800	1800
Total Lost time (s)	2.0	2.0	2.0		2.0	2.0
Lane Util. Factor	1.00	1.00	1.00		1.00	1.00
Frt	1.00	1.00	0.90		1.00	0.85
Flt Protected	0.95	1.00	1.00		0.95	1.00
Satd. Flow (prot)	1710	1900	1701		1710	1530
Flt Permitted	0.95	1.00	1.00		0.95	1.00
Satd. Flow (perm)	1710	1900	1701		1710	1530
Volume (vph)	115	204	69	241	546	283
Peak-hour factor, PHF	0.95	0.95	0.95	0.95	0.95	0.95
Adj. Flow (vph)	121	215	73	254	575	298
RTOR Reduction (vph)	0	0	199	0	0	154
Lane Group Flow (vph)	121	215	128	0	575	144
Turn Type	Prot					Perm
Protected Phases	7	4	8		6	
Permitted Phases						6
Actuated Green, G (s)	10.0	25.0	11.0		27.0	27.0
Effective Green, g (s)	12.0	27.0	13.0		29.0	29.0
Actuated g/C Ratio	0.20	0.45	0.22		0.48	0.48
Clearance Time (s)	4.0	4.0	4.0		4.0	4.0
Lane Grp Cap (vph)	342	855	369		827	740
v/s Ratio Prot	c0.07	0.11	c0.08		c0.34	
v/s Ratio Perm						0.09
v/c Ratio	0.35	0.25	0.35		0.70	0.19
Uniform Delay, d1	20.7	10.2	19.9		12.1	8.8
Progression Factor	1.00	1.00	1.00		1.00	1.00
Incremental Delay, d2	2.9	0.7	2.6		4.8	0.6
Delay (s)	23.5	10.9	22.5		16.9	9.4
Level of Service	C	B	C		B	A
Approach Delay (s)		15.5	22.5		14.3	
Approach LOS		B	C		B	

Intersection Summary			
HCM Average Control Delay	16.3	HCM Level of Service	B
HCM Volume to Capacity ratio	0.52		
Actuated Cycle Length (s)	60.0	Sum of lost time (s)	6.0
Intersection Capacity Utilization	68.7%	ICU Level of Service	C
Analysis Period (min)	15		

c Critical Lane Group

Movement	EBL	EBR	NBL	NBT	SBT	SBR
Lane Configurations						
Ideal Flow (vphpl)	1800	1800	1800	1900	1900	1900
Total Lost time (s)	2.0	2.0	2.0	2.0	2.0	
Lane Util. Factor	1.00	1.00	1.00	1.00	1.00	
Frt	1.00	0.85	1.00	1.00	0.99	
Flt Protected	0.95	1.00	0.95	1.00	1.00	
Satd. Flow (prot)	1710	1530	1710	1900	1879	
Flt Permitted	0.95	1.00	0.95	1.00	1.00	
Satd. Flow (perm)	1710	1530	1710	1900	1879	
Volume (vph)	240	472	244	372	565	51
Peak-hour factor, PHF	0.95	0.95	0.95	0.95	0.95	0.95
Adj. Flow (vph)	253	497	257	392	595	54
RTOR Reduction (vph)	0	111	0	0	6	0
Lane Group Flow (vph)	253	386	257	392	643	0
Turn Type		pm+ov	Prot			
Protected Phases	4	5	5	2	6	
Permitted Phases		4				
Actuated Green, G (s)	10.9	21.8	10.9	36.9	22.0	
Effective Green, g (s)	12.9	25.8	12.9	38.9	24.0	
Actuated g/C Ratio	0.23	0.46	0.23	0.70	0.43	
Clearance Time (s)	4.0	4.0	4.0	4.0	4.0	
Vehicle Extension (s)	3.0	3.0	3.0	3.0	3.0	
Lane Grp Cap (vph)	395	762	395	1325	808	
v/s Ratio Prot	c0.15	0.12	c0.15	0.21	c0.34	
v/s Ratio Perm		0.14				
v/c Ratio	0.64	0.51	0.65	0.30	0.80	
Uniform Delay, d1	19.4	10.5	19.4	3.2	13.8	
Progression Factor	1.00	1.00	1.00	1.00	1.00	
Incremental Delay, d2	3.5	0.5	3.8	0.1	5.5	
Delay (s)	22.9	11.1	23.2	3.3	19.2	
Level of Service	C	B	C	A	B	
Approach Delay (s)	15.1			11.2	19.2	
Approach LOS	B			B	B	

Intersection Summary			
HCM Average Control Delay	15.2	HCM Level of Service	B
HCM Volume to Capacity ratio	0.70		
Actuated Cycle Length (s)	55.8	Sum of lost time (s)	6.0
Intersection Capacity Utilization	71.1%	ICU Level of Service	C
Analysis Period (min)	15		
c Critical Lane Group			

Movement	EBL	EBT	WBT	WBR	SBL	SBR
Lane Configurations						
Ideal Flow (vphpl)	1800	1900	1900	1900	1800	1800
Total Lost time (s)	2.0	2.0	2.0		2.0	2.0
Lane Util. Factor	1.00	1.00	1.00		1.00	1.00
Frt	1.00	1.00	0.96		1.00	0.85
Flt Protected	0.95	1.00	1.00		0.95	1.00
Satd. Flow (prot)	1710	1900	1820		1710	1530
Flt Permitted	0.95	1.00	1.00		0.95	1.00
Satd. Flow (perm)	1710	1900	1820		1710	1530
Volume (vph)	333	313	306	138	126	450
Peak-hour factor, PHF	0.95	0.95	0.95	0.95	0.95	0.95
Adj. Flow (vph)	351	329	322	145	133	474
RTOR Reduction (vph)	0	0	28	0	0	159
Lane Group Flow (vph)	351	329	439	0	133	315
Turn Type	Prot					pm+ov
Protected Phases	7	4	8		6	7
Permitted Phases						6
Actuated Green, G (s)	14.8	35.2	16.4		10.6	25.4
Effective Green, g (s)	16.8	37.2	18.4		12.6	29.4
Actuated g/C Ratio	0.31	0.69	0.34		0.23	0.55
Clearance Time (s)	4.0	4.0	4.0		4.0	4.0
Vehicle Extension (s)	3.0	3.0	3.0		3.0	3.0
Lane Grp Cap (vph)	534	1314	622		400	893
v/s Ratio Prot	c0.21	0.17	c0.24		0.08	c0.11
v/s Ratio Perm						0.10
v/c Ratio	0.66	0.25	0.71		0.33	0.35
Uniform Delay, d1	16.0	3.1	15.3		17.1	6.9
Progression Factor	1.00	1.00	1.00		1.00	1.00
Incremental Delay, d2	2.9	0.1	3.6		0.5	0.2
Delay (s)	18.9	3.2	19.0		17.6	7.1
Level of Service	B	A	B		B	A
Approach Delay (s)		11.3	19.0		9.4	
Approach LOS		B	B		A	

Intersection Summary			
HCM Average Control Delay	12.7	HCM Level of Service	B
HCM Volume to Capacity ratio	0.58		
Actuated Cycle Length (s)	53.8	Sum of lost time (s)	6.0
Intersection Capacity Utilization	62.3%	ICU Level of Service	B
Analysis Period (min)	15		
c Critical Lane Group			

Movement	WBL	WBR	NBT	NBR	SBL	SBT
Lane Configurations						
Ideal Flow (vphpl)	1800	1800	1800	1800	1800	1900
Grade (%)	-5%		-5%			0%
Total Lost time (s)	2.0		2.0		2.0	2.0
Lane Util. Factor	1.00		1.00		1.00	1.00
Frt	0.96		0.97		1.00	1.00
Flt Protected	0.97		1.00		0.95	1.00
Satd. Flow (prot)	1706		1797		1710	1900
Flt Permitted	0.97		1.00		0.56	1.00
Satd. Flow (perm)	1706		1797		1017	1900
Volume (vph)	198	96	213	51	84	241
Peak-hour factor, PHF	0.95	0.95	0.95	0.95	0.95	0.95
Adj. Flow (vph)	208	101	224	54	88	254
RTOR Reduction (vph)	41	0	9	0	0	0
Lane Group Flow (vph)	268	0	269	0	88	254
Turn Type					Perm	
Protected Phases	8		2			6
Permitted Phases					6	
Actuated Green, G (s)	13.9		38.1		38.1	38.1
Effective Green, g (s)	15.9		40.1		40.1	40.1
Actuated g/C Ratio	0.27		0.67		0.67	0.67
Clearance Time (s)	4.0		4.0		4.0	4.0
Vehicle Extension (s)	3.0		3.0		3.0	3.0
Lane Grp Cap (vph)	452		1201		680	1270
v/s Ratio Prot	c0.16		c0.15			0.13
v/s Ratio Perm					0.09	
v/c Ratio	0.59		0.22		0.13	0.20
Uniform Delay, d1	19.2		3.9		3.6	3.8
Progression Factor	1.00		0.65		1.00	1.00
Incremental Delay, d2	2.1		0.4		0.4	0.4
Delay (s)	21.3		2.9		4.0	4.2
Level of Service	C		A		A	A
Approach Delay (s)	21.3		2.9			4.1
Approach LOS	C		A			A

Intersection Summary			
HCM Average Control Delay	9.5	HCM Level of Service	A
HCM Volume to Capacity ratio	0.32		
Actuated Cycle Length (s)	60.0	Sum of lost time (s)	4.0
Intersection Capacity Utilization	51.2%	ICU Level of Service	A
Analysis Period (min)	15		

c Critical Lane Group

Movement	EBL	EBT	WBT	WBR	SBL	SBR
Lane Configurations						
Ideal Flow (vphpl)	1800	1900	1900	1800	1800	1800
Grade (%)		0%	-2%		5%	
Total Lost time (s)	2.0	2.0	2.0	2.0	2.0	2.0
Lane Util. Factor	1.00	1.00	1.00	1.00	1.00	1.00
Frt	1.00	1.00	1.00	0.85	1.00	0.85
Flt Protected	0.95	1.00	1.00	1.00	0.95	1.00
Satd. Flow (prot)	1710	1900	1919	1545	1667	1492
Flt Permitted	0.95	1.00	1.00	1.00	0.95	1.00
Satd. Flow (perm)	1710	1900	1919	1545	1667	1492
Volume (vph)	71	369	659	193	239	199
Peak-hour factor, PHF	0.95	0.95	0.95	0.95	0.95	0.95
Adj. Flow (vph)	75	388	694	203	252	209
RTOR Reduction (vph)	0	0	0	91	0	164
Lane Group Flow (vph)	75	388	694	112	252	45
Turn Type	Prot			Perm		Perm
Protected Phases	5	2	6		4	
Permitted Phases				6		4
Actuated Green, G (s)	6.0	41.0	31.0	31.0	11.0	11.0
Effective Green, g (s)	8.0	43.0	33.0	33.0	13.0	13.0
Actuated g/C Ratio	0.13	0.72	0.55	0.55	0.22	0.22
Clearance Time (s)	4.0	4.0	4.0	4.0	4.0	4.0
Vehicle Extension (s)	3.0	3.0	3.0	3.0	3.0	3.0
Lane Grp Cap (vph)	228	1362	1055	850	361	323
v/s Ratio Prot	c0.04	0.20	c0.36		c0.15	
v/s Ratio Perm				0.07		0.03
v/c Ratio	0.33	0.28	0.66	0.13	0.70	0.14
Uniform Delay, d1	23.6	3.0	9.5	6.5	21.7	19.0
Progression Factor	1.00	1.00	1.00	1.00	0.93	1.21
Incremental Delay, d2	0.8	0.5	3.2	0.3	10.1	0.8
Delay (s)	24.4	3.6	12.7	6.9	30.2	23.8
Level of Service	C	A	B	A	C	C
Approach Delay (s)		6.9	11.4		27.3	
Approach LOS		A	B		C	

Intersection Summary			
HCM Average Control Delay	14.3	HCM Level of Service	B
HCM Volume to Capacity ratio	0.60		
Actuated Cycle Length (s)	60.0	Sum of lost time (s)	6.0
Intersection Capacity Utilization	67.0%	ICU Level of Service	C
Analysis Period (min)	15		

c Critical Lane Group

Movement	EBL	EBT	EBR	WBL	WBT	WBR	NBL	NBT	NBR	SBL	SBT	SBR
Lane Configurations												
Ideal Flow (vphpl)	1800	1900	1900	1800	1900	1900	1900	1900	1900	1900	1900	1900
Total Lost time (s)	2.0	2.0		2.0	2.0			2.0			2.0	
Lane Util. Factor	1.00	1.00		1.00	1.00			1.00			1.00	
Frt	1.00	1.00		1.00	0.99			0.93			0.96	
Flt Protected	0.95	1.00		0.95	1.00			0.98			0.97	
Satd. Flow (prot)	1710	1892		1710	1878			1729			1762	
Flt Permitted	0.95	1.00		0.95	1.00			0.86			0.83	
Satd. Flow (perm)	1710	1892		1710	1878			1528			1500	
Volume (vph)	29	743	23	18	788	65	27	0	27	63	7	34
Peak-hour factor, PHF	0.95	0.95	0.95	0.95	0.95	0.95	0.95	0.95	0.95	0.95	0.95	0.95
Adj. Flow (vph)	31	782	24	19	829	68	28	0	28	66	7	36
RTOR Reduction (vph)	0	2	0	0	4	0	0	21	0	0	25	0
Lane Group Flow (vph)	31	804	0	19	893	0	0	35	0	0	84	0
Turn Type	Prot			Prot			Perm			Perm		
Protected Phases	7	4		3	8			2			6	
Permitted Phases							2			6		
Actuated Green, G (s)	3.1	29.0		1.5	27.4			10.7			10.7	
Effective Green, g (s)	5.1	31.0		3.5	29.4			12.7			12.7	
Actuated g/C Ratio	0.10	0.58		0.07	0.55			0.24			0.24	
Clearance Time (s)	4.0	4.0		4.0	4.0			4.0			4.0	
Vehicle Extension (s)	3.0	3.0		3.0	3.0			3.0			3.0	
Lane Grp Cap (vph)	164	1102		113	1038			365			358	
v/s Ratio Prot	c0.02	0.43		0.01	c0.48							
v/s Ratio Perm								0.02			c0.06	
v/c Ratio	0.19	0.73		0.17	0.86			0.10			0.23	
Uniform Delay, d1	22.1	8.1		23.5	10.1			15.8			16.3	
Progression Factor	1.00	1.00		1.00	1.00			1.00			1.00	
Incremental Delay, d2	0.6	2.5		0.7	7.3			0.1			0.3	
Delay (s)	22.7	10.5		24.2	17.4			15.9			16.7	
Level of Service	C	B		C	B			B			B	
Approach Delay (s)		11.0			17.5			15.9			16.7	
Approach LOS		B			B			B			B	

Intersection Summary			
HCM Average Control Delay	14.6	HCM Level of Service	B
HCM Volume to Capacity ratio	0.60		
Actuated Cycle Length (s)	53.2	Sum of lost time (s)	6.0
Intersection Capacity Utilization	60.4%	ICU Level of Service	B
Analysis Period (min)	15		
c Critical Lane Group			

Movement	EBL	EBT	WBT	WBR	SBL	SBR
Lane Configurations						
Ideal Flow (vphpl)	1800	1900	1900	1800	1800	1800
Total Lost time (s)	2.0	2.0	2.0	2.0	2.0	2.0
Lane Util. Factor	1.00	1.00	1.00	1.00	1.00	1.00
Frt	1.00	1.00	1.00	0.85	1.00	0.85
Flt Protected	0.95	1.00	1.00	1.00	0.95	1.00
Satd. Flow (prot)	1710	1900	1900	1530	1710	1530
Flt Permitted	0.95	1.00	1.00	1.00	0.95	1.00
Satd. Flow (perm)	1710	1900	1900	1530	1710	1530
Volume (vph)	140	672	961	260	260	140
Peak-hour factor, PHF	0.95	0.95	0.95	0.95	0.95	0.95
Adj. Flow (vph)	147	707	1012	274	274	147
RTOR Reduction (vph)	0	0	0	116	0	115
Lane Group Flow (vph)	147	707	1012	158	274	32
Turn Type	Prot			Perm		Perm
Protected Phases	7	4	8		6	
Permitted Phases				8		6
Actuated Green, G (s)	7.3	51.5	40.2	40.2	13.8	13.8
Effective Green, g (s)	9.3	53.5	42.2	42.2	15.8	15.8
Actuated g/C Ratio	0.13	0.73	0.58	0.58	0.22	0.22
Clearance Time (s)	4.0	4.0	4.0	4.0	4.0	4.0
Vehicle Extension (s)	3.0	3.0	3.0	3.0	3.0	3.0
Lane Grp Cap (vph)	217	1387	1094	881	369	330
v/s Ratio Prot	c0.09	0.37	c0.53		c0.16	
v/s Ratio Perm				0.10		0.02
v/c Ratio	0.68	0.51	0.93	0.18	0.74	0.10
Uniform Delay, d1	30.6	4.3	14.1	7.4	26.9	23.0
Progression Factor	1.00	1.00	1.00	1.00	1.00	1.00
Incremental Delay, d2	8.1	0.3	12.8	0.1	12.7	0.6
Delay (s)	38.7	4.6	26.9	7.5	39.5	23.6
Level of Service	D	A	C	A	D	C
Approach Delay (s)		10.4	22.8		34.0	
Approach LOS		B	C		C	

Intersection Summary			
HCM Average Control Delay	20.5	HCM Level of Service	C
HCM Volume to Capacity ratio	0.83		
Actuated Cycle Length (s)	73.3	Sum of lost time (s)	6.0
Intersection Capacity Utilization	84.1%	ICU Level of Service	E
Analysis Period (min)	15		
c Critical Lane Group			

Movement	EBL	EBT	WBT	WBR	SBL	SBR
Lane Configurations						
Ideal Flow (vphpl)	1800	1900	1900	1900	1900	1900
Total Lost time (s)	2.0	2.0	2.0			2.0
Lane Util. Factor	1.00	1.00	1.00			1.00
Frt	1.00	1.00	1.00			0.86
Flt Protected	0.95	1.00	1.00			1.00
Satd. Flow (prot)	1710	1900	1900			1644
Flt Permitted	0.95	1.00	1.00			1.00
Satd. Flow (perm)	1710	1900	1900			1644
Volume (vph)	487	445	484	0	0	737
Peak-hour factor, PHF	0.95	0.95	0.95	0.95	0.95	0.95
Adj. Flow (vph)	513	468	509	0	0	776
RTOR Reduction (vph)	0	0	0	0	0	85
Lane Group Flow (vph)	513	468	509	0	0	691
Turn Type	Prot					Over
Protected Phases	5	2	6			5
Permitted Phases						
Actuated Green, G (s)	43.0	80.0	29.0			43.0
Effective Green, g (s)	45.0	80.0	31.0			45.0
Actuated g/C Ratio	0.56	1.00	0.39			0.56
Clearance Time (s)	4.0	4.0	4.0			4.0
Vehicle Extension (s)	3.0	3.0	3.0			3.0
Lane Grp Cap (vph)	962	1900	736			925
v/s Ratio Prot	0.30	0.25	c0.27			c0.42
v/s Ratio Perm						
v/c Ratio	0.53	0.25	0.69			0.75
Uniform Delay, d1	10.9	0.0	20.5			13.2
Progression Factor	1.00	1.00	0.71			1.00
Incremental Delay, d2	0.6	0.3	5.0			3.3
Delay (s)	11.5	0.3	19.6			16.5
Level of Service	B	A	B			B
Approach Delay (s)		6.2	19.6		16.5	
Approach LOS		A	B		B	

Intersection Summary			
HCM Average Control Delay	12.7	HCM Level of Service	B
HCM Volume to Capacity ratio	0.71		
Actuated Cycle Length (s)	80.0	Sum of lost time (s)	4.0
Intersection Capacity Utilization	77.8%	ICU Level of Service	D
Analysis Period (min)	15		
c Critical Lane Group			

Movement	WBL	WBR	NBT	NBR	SBL	SBT
Lane Configurations						
Sign Control	Stop		Free			Free
Grade	0%		0%			0%
Volume (veh/h)	0	249	487	0	307	737
Peak Hour Factor	0.95	0.95	0.95	0.95	0.95	0.95
Hourly flow rate (vph)	0	262	513	0	323	776
Pedestrians						
Lane Width (ft)						
Walking Speed (ft/s)						
Percent Blockage						
Right turn flare (veh)						
Median type	None					
Median storage veh)						
Upstream signal (ft)			158			
pX, platoon unblocked						
vC, conflicting volume	1935	513			513	
vC1, stage 1 conf vol						
vC2, stage 2 conf vol						
vCu, unblocked vol	1935	513			513	
tC, single (s)	6.4	6.2			4.1	
tC, 2 stage (s)						
tF (s)	3.5	3.3			2.2	
p0 queue free %	100	54			70	
cM capacity (veh/h)	51	565			1063	

Direction, Lane #	WB 1	NB 1	SB 1	SB 2
Volume Total	262	513	323	776
Volume Left	0	0	323	0
Volume Right	262	0	0	0
cSH	565	1700	1063	1700
Volume to Capacity	0.46	0.30	0.30	0.46
Queue Length 95th (ft)	61	0	32	0
Control Delay (s)	16.7	0.0	9.9	0.0
Lane LOS	C		A	
Approach Delay (s)	16.7	0.0	2.9	
Approach LOS	C			

Intersection Summary			
Average Delay	4.0		
Intersection Capacity Utilization	49.3%	ICU Level of Service	A
Analysis Period (min)	15		

Movement	EBL	EBT	WBT	WBR	SBL	SBR
Lane Configurations						
Ideal Flow (vphpl)	1900	1900	1900	1900	1900	1900
Total Lost time (s)		2.0	2.0	2.0	2.0	
Lane Util. Factor		1.00	1.00	1.00	1.00	
Frt		1.00	1.00	0.85	1.00	
Flt Protected		1.00	1.00	1.00	0.95	
Satd. Flow (prot)		1900	1900	1615	1805	
Flt Permitted		1.00	1.00	1.00	0.95	
Satd. Flow (perm)		1900	1900	1615	1805	
Volume (vph)	0	445	484	249	307	0
Peak-hour factor, PHF	0.95	0.95	0.95	0.95	0.95	0.95
Adj. Flow (vph)	0	468	509	262	323	0
RTOR Reduction (vph)	0	0	0	0	0	0
Lane Group Flow (vph)	0	468	509	262	323	0
Turn Type				Free		
Protected Phases		2	6		4	
Permitted Phases				Free		
Actuated Green, G (s)		53.7	53.7	80.0	18.3	
Effective Green, g (s)		55.7	55.7	80.0	20.3	
Actuated g/C Ratio		0.70	0.70	1.00	0.25	
Clearance Time (s)		4.0	4.0		4.0	
Vehicle Extension (s)		3.0	3.0		3.0	
Lane Grp Cap (vph)		1323	1323	1615	458	
v/s Ratio Prot		0.25	c0.27		c0.18	
v/s Ratio Perm				0.16		
v/c Ratio		0.35	0.38	0.16	0.71	
Uniform Delay, d1		4.9	5.0	0.0	27.1	
Progression Factor		1.00	1.00	1.00	1.00	
Incremental Delay, d2		0.7	0.8	0.2	4.9	
Delay (s)		5.6	5.9	0.2	32.0	
Level of Service		A	A	A	C	
Approach Delay (s)		5.6	4.0		32.0	
Approach LOS		A	A		C	

Intersection Summary			
HCM Average Control Delay	10.3	HCM Level of Service	B
HCM Volume to Capacity ratio	0.46		
Actuated Cycle Length (s)	80.0	Sum of lost time (s)	4.0
Intersection Capacity Utilization	49.1%	ICU Level of Service	A
Analysis Period (min)	15		
c Critical Lane Group			

Movement	EBL	EBT	WBT	WBR	SBL	SBR
Lane Configurations						
Ideal Flow (vphpl)	1800	1900	1900	1800	1800	1800
Total Lost time (s)	2.0	2.0	2.0	2.0	2.0	2.0
Lane Util. Factor	1.00	1.00	1.00	1.00	1.00	1.00
Frt	1.00	1.00	1.00	0.85	1.00	0.85
Flt Protected	0.95	1.00	1.00	1.00	0.95	1.00
Satd. Flow (prot)	1710	1900	1900	1530	1710	1530
Flt Permitted	0.95	1.00	1.00	1.00	0.95	1.00
Satd. Flow (perm)	1710	1900	1900	1530	1710	1530
Volume (vph)	442	235	242	207	80	304
Peak-hour factor, PHF	0.95	0.95	0.95	0.95	0.95	0.95
Adj. Flow (vph)	465	247	255	218	84	320
RTOR Reduction (vph)	0	0	0	165	0	232
Lane Group Flow (vph)	465	247	255	53	84	88
Turn Type	Prot			Perm		Perm
Protected Phases	7	4	8		6	
Permitted Phases				8		6
Actuated Green, G (s)	18.3	33.6	11.3	11.3	13.1	13.1
Effective Green, g (s)	20.3	35.6	13.3	13.3	15.1	15.1
Actuated g/C Ratio	0.37	0.65	0.24	0.24	0.28	0.28
Clearance Time (s)	4.0	4.0	4.0	4.0	4.0	4.0
Vehicle Extension (s)	3.0	3.0	3.0	3.0	3.0	3.0
Lane Grp Cap (vph)	635	1237	462	372	472	422
v/s Ratio Prot	c0.27	0.13	c0.13		0.05	
v/s Ratio Perm				0.03		c0.06
v/c Ratio	0.73	0.20	0.55	0.14	0.18	0.21
Uniform Delay, d1	14.9	3.8	18.1	16.2	15.1	15.2
Progression Factor	1.00	1.00	1.00	1.00	1.00	1.00
Incremental Delay, d2	4.4	0.1	1.4	0.2	0.8	1.1
Delay (s)	19.2	3.9	19.5	16.4	15.9	16.3
Level of Service	B	A	B	B	B	B
Approach Delay (s)		13.9	18.1		16.2	
Approach LOS		B	B		B	

Intersection Summary			
HCM Average Control Delay	15.7	HCM Level of Service	B
HCM Volume to Capacity ratio	0.51		
Actuated Cycle Length (s)	54.7	Sum of lost time (s)	6.0
Intersection Capacity Utilization	56.9%	ICU Level of Service	B
Analysis Period (min)	15		
c Critical Lane Group			

APPENDIX D

PROPOSED SCHEDULE OF EVENTS WITH TRIP GENERATION

Table D-1 - Proposed Schedule of Events with Trip Generation

Activity by Day of Week	Time	Number of Participants	Average Participants Per Vehicle	Number of Vehicles	Peak (4-6 p.m.) In	Peak (4-6 p.m.) Out	Off-Peak In	Off-Peak Out
Monday								
Fife and Drum	5 - 7 p.m.	30	1	30	30			30
Men's Accountability Group	6:30 - 8:30 p.m.	10	1	10			10	10
Care Groups	7 - 9 p.m.	15	1	15			15	15
Monday Total		**55**		**55**	**30**	**0**	**25**	**55**
Tuesday								
Scouts	6:30 - 8:30 p.m.	25	1	25			25	25
Worship Choir	7 - 9 p.m.	30	1	30			30	30
Care Groups	7 - 9 p.m.	15	1	15			15	15
Tuesday Total		**70**		**70**	**0**	**0**	**70**	**70**
Wednesday								
Skateboard Park	4 - 6 p.m.	50	1	50	50			50
Wednesday Night Dinner	5:30 - 6:30 p.m.	150	3	50	50			
Study for all ages	6:30 - 8:30 p.m.		*included in above*					50
Wednesday Total		**200**		**100**	**100**	**0**	**0**	**100**
Thursday								
Prayer Power Hour	6 - 7 p.m.	50	3	17			17	17
Care Groups	7 - 9 p.m.	25	1	25			25	25
Thursday Total		**75**		**42**	**0**	**0**	**42**	**42**
Friday								
Keepers of the Home	6 - 8 p.m.	50	1	50			50	50
Singles Group	6:30 - 9:30 p.m.	50	1	50			50	50
Skateboard Park	5 - 9 p.m.	50	1	50	50			50
Friday Total		**150**		**150**	**50**	**0**	**100**	**150**
Saturday								
Band Rehearsal	6 - 9:30 p.m.	30	1	30			30	30
Skateboard Park	5 - 9 p.m.	50	1	50	50			50
Service	7 - 8:30 p.m.	125	3	42			42	
After Glo Service	9 - 10 p.m.		*included in above*					42
Saturday Total		**205**		**122**	**50**	**0**	**72**	**122**
Sunday								
Home Builders Care Group	5 - 9 p.m.	30	1	30	30			30
Young Adult Study	7 - 9 p.m.	50	1	50			50	50
Sunday Total		**80**		**80**	**30**	**0**	**50**	**80**

APPENDIX E

SIGNAL WARRANT ANALYSIS

PEAK HOUR VOLUME WARRANT
(RURAL AREAS)

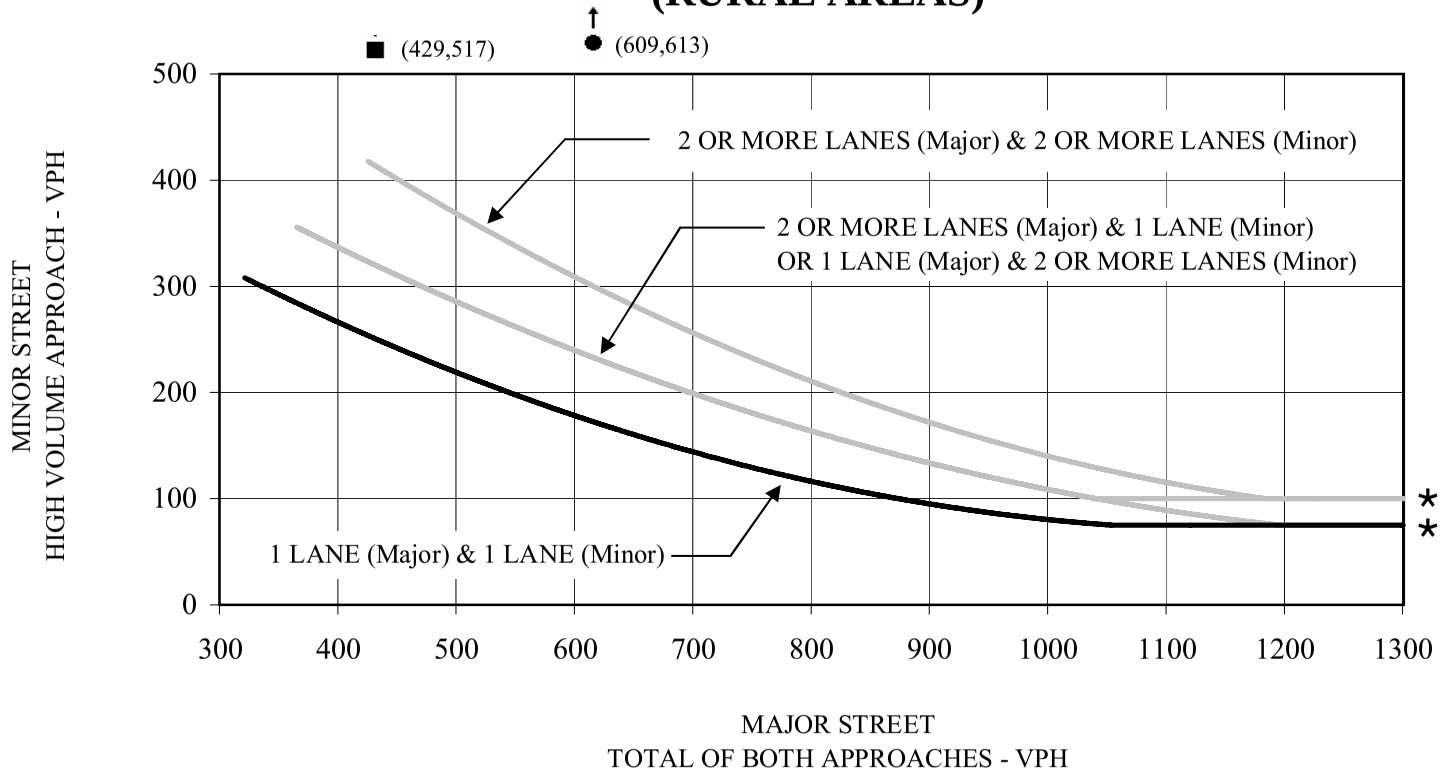

* 100 VPH applies as the lower threshold volume for a minor street approach with two or more lanes and 75 VPH applies as the lower threshold volume for a minor street approaching with one lane.

LSA

EXHIBIT E-1

● SATURDAY PEAK HOUR

■ SUNDAY PEAK HOUR

Church of the Woods

Grass Valley Road/SR-189

Year 2009 Peak Hour Warrant

SOURCE: STATE OF CALIFORNIA, DEPARTMENT OF TRANSPORTATION, TRAFFIC MANUAL, FIGURE 9-9

R:\CTW430\July 2008\Signal Warrants\01_Rural_2009_Grass Valley - 189 (7/7/2008)

PEAK HOUR VOLUME WARRANT
(RURAL AREAS)

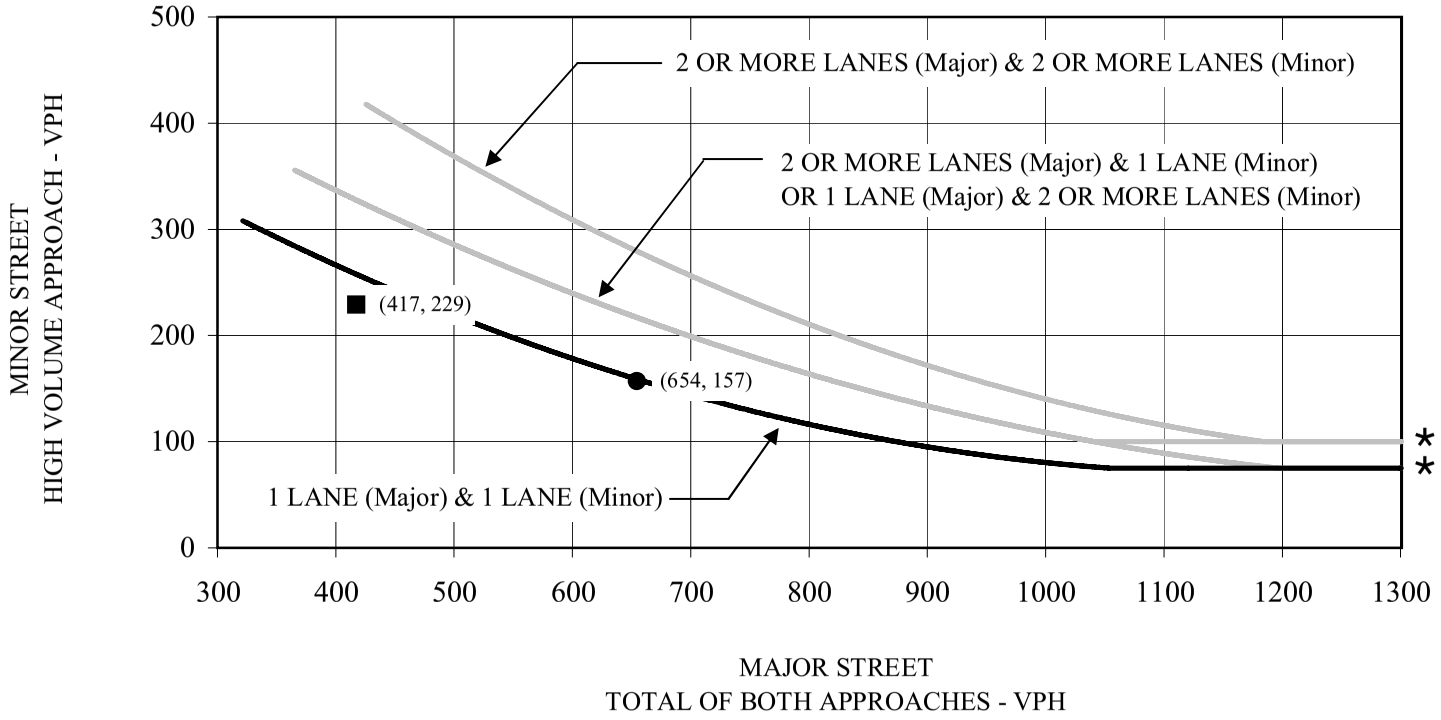

* 100 VPH applies as the lower threshold volume for a minor street approach with two or more lanes and 75 VPH applies as the lower threshold volume for a minor street approaching with one lane.

LSA

EXHIBIT E-2

● SATURDAY PEAK HOUR

■ SUNDAY PEAK HOUR

Church of the Woods

Lake Gregory Road/SR-189

Year 2009 Peak Hour Warrant

SOURCE: STATE OF CALIFORNIA, DEPARTMENT OF TRANSPORTATION, TRAFFIC MANUAL, FIGURE 9-9

R:\CTW430\July 2008\Signal Warrants\02_Rural_2009_Lake Gregory - 189 (7/7/2008)

PEAK HOUR VOLUME WARRANT
(RURAL AREAS)

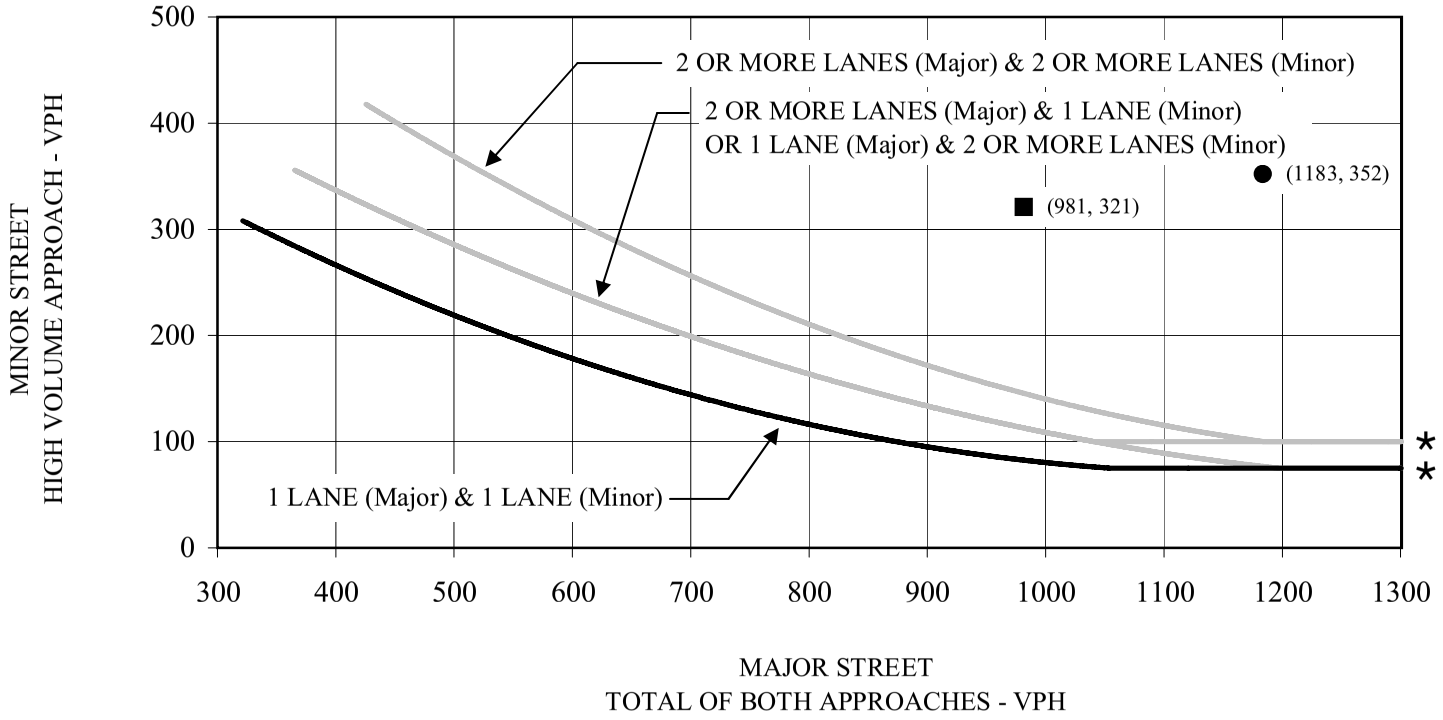

* 100 VPH applies as the lower threshold volume for a minor street approach with two or more lanes and 75 VPH applies as the lower threshold volume for a minor street approaching with one lane.

LSA

EXHIBIT E-3

● SATURDAY PEAK HOUR

■ SUNDAY PEAK HOUR

Church of the Woods

Lake Gregory Road/SR-18

Year 2009 Peak Hour Warrant

SOURCE: STATE OF CALIFORNIA, DEPARTMENT OF TRANSPORTATION, TRAFFIC MANUAL, FIGURE 9-9

R:\CTW430\July 2008\Signal Warrants\03_Rural_2009_Lake Gregory - 18 (7/7/2008)

PEAK HOUR VOLUME WARRANT
(RURAL AREAS)

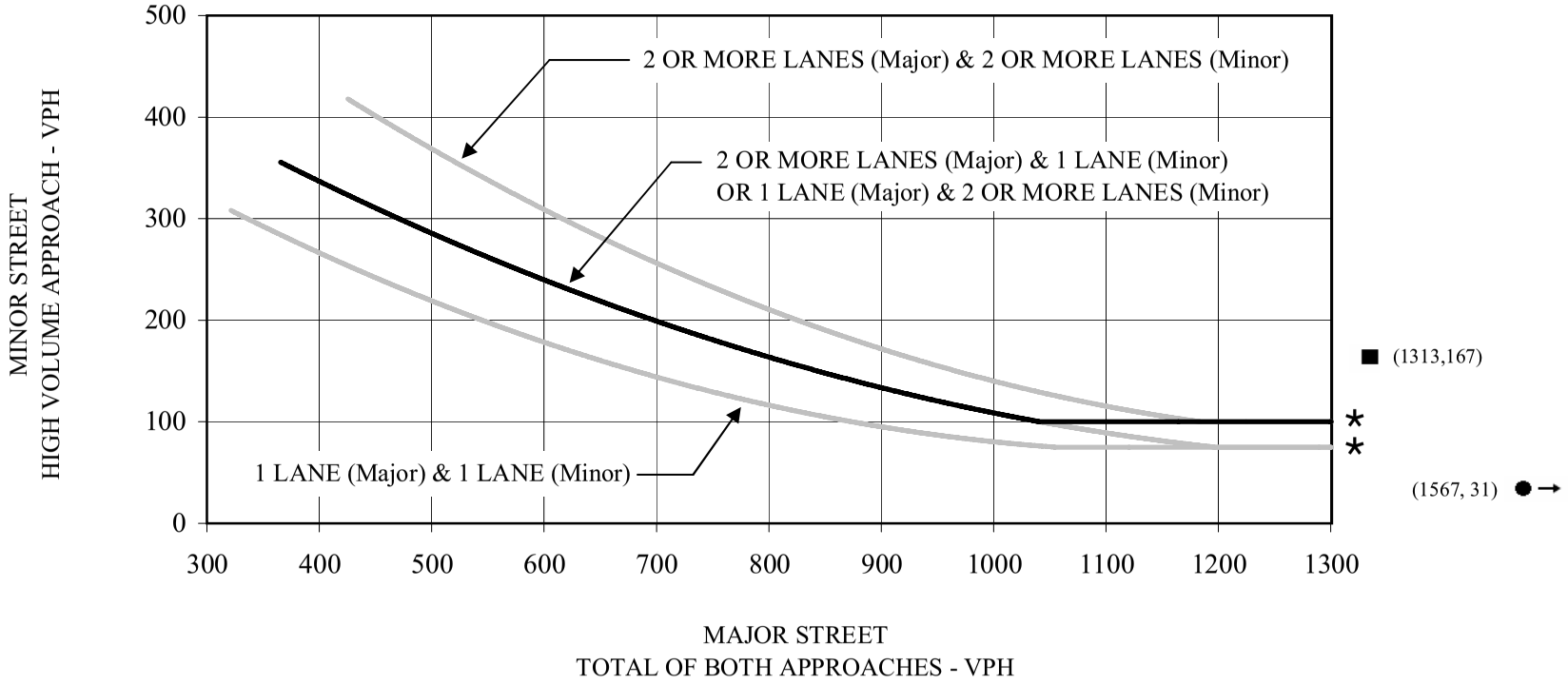

* 100 VPH applies as the lower threshold volume for a minor street approach with two or more lanes and 75 VPH applies as the lower threshold volume for a minor street approaching with one lane.

LSA

EXHIBIT E-4

● SATURDAY PEAK HOUR

■ SUNDAY PEAK HOUR

Church of the Woods

Project Access/SR-18

Year 2009 Peak Hour Warrant

SOURCE: STATE OF CALIFORNIA, DEPARTMENT OF TRANSPORTATION, TRAFFIC MANUAL, FIGURE 9-9

R:\CTW430\July 2008\Signal Warrants\04_Rural_2009_Project Access - 18 (7/7/2008)

PEAK HOUR VOLUME WARRANT
(RURAL AREAS)

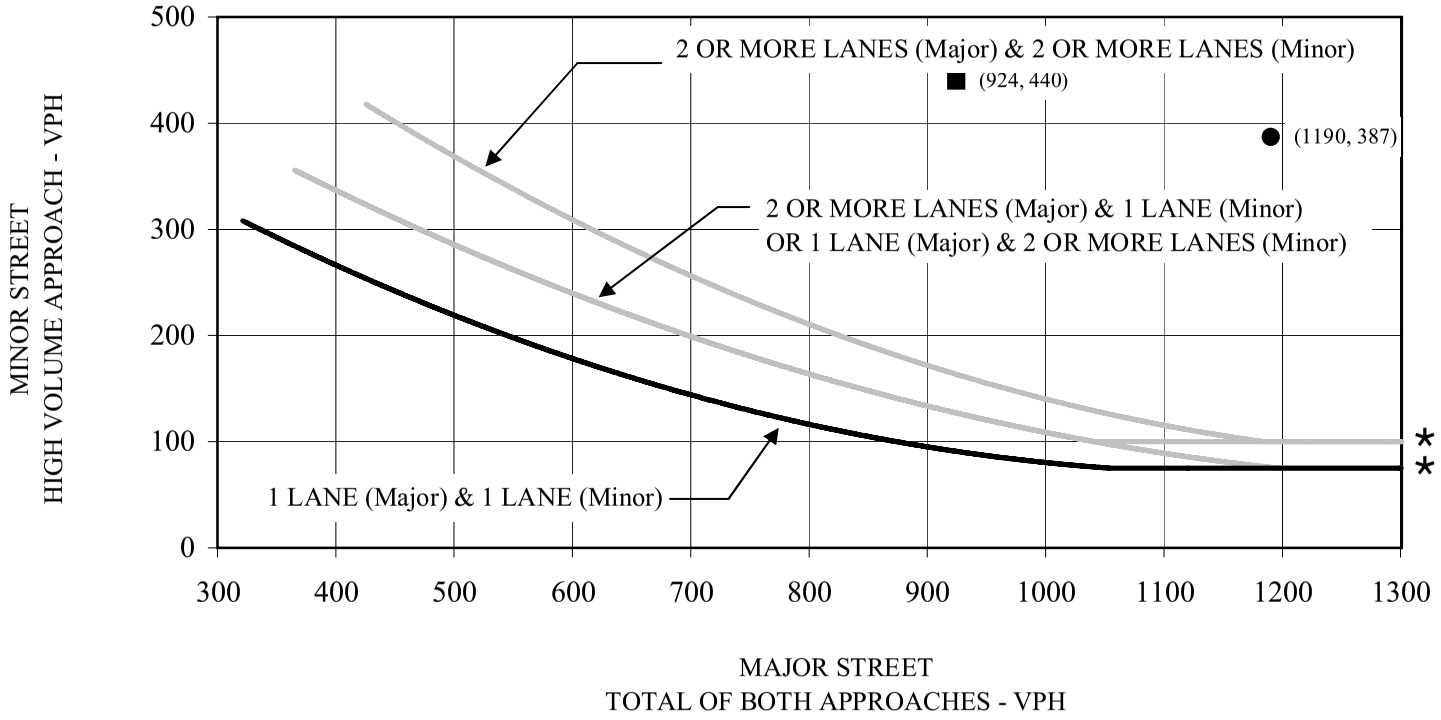

* 100 VPH applies as the lower threshold volume for a minor street approach with two or more lanes and 75 VPH applies as the lower threshold volume for a minor street approaching with one lane.

LSA

EXHIBIT E-5

● SATURDAY PEAK HOUR

■ SUNDAY PEAK HOUR

Church of the Woods

Daley Canyon Road/SR-18

Year 2009 Peak Hour Warrant

SOURCE: STATE OF CALIFORNIA, DEPARTMENT OF TRANSPORTATION, TRAFFIC MANUAL, FIGURE 9-9

R:\CTW430\July 2008\Signal Warrants\05_Rural_2009_Daley Canyon - 18 (7/7/2008)

PEAK HOUR VOLUME WARRANT
(RURAL AREAS)

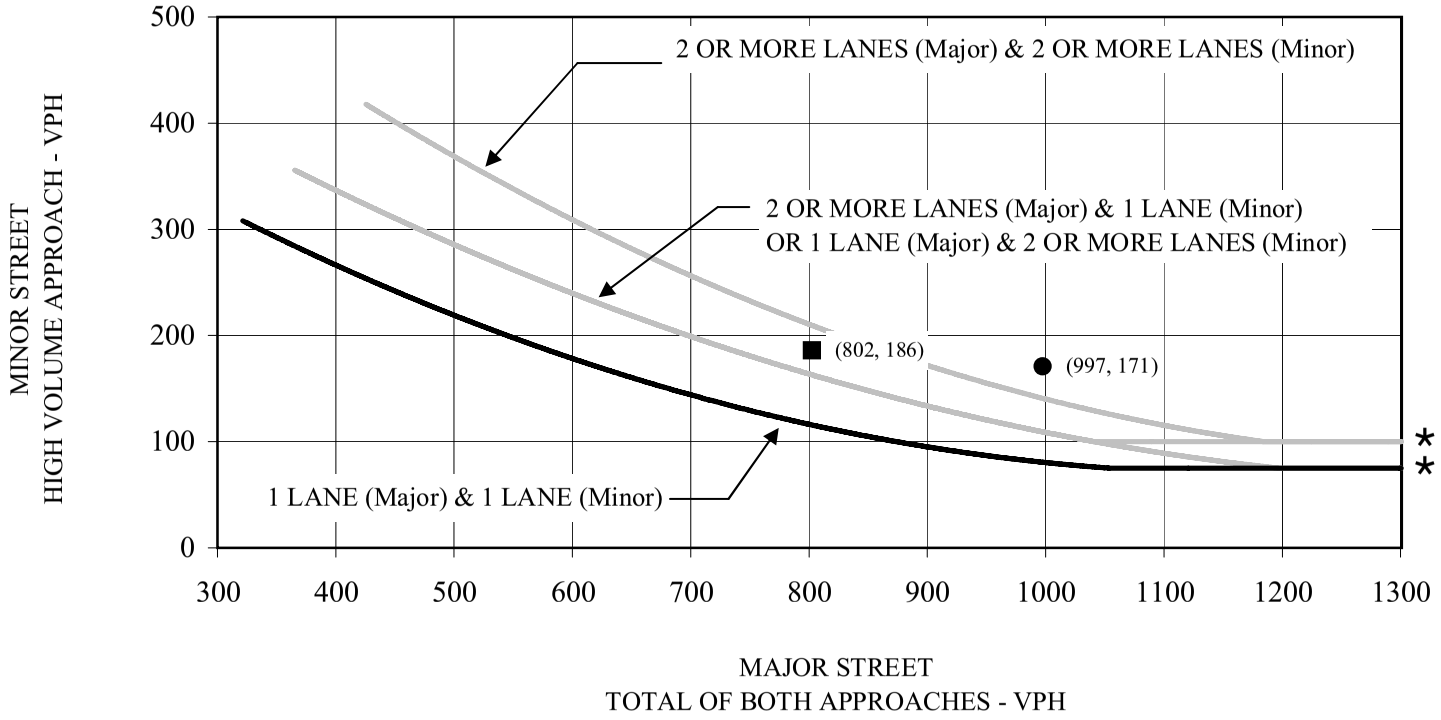

* 100 VPH applies as the lower threshold volume for a minor street approach with two or more lanes and 75 VPH applies as the lower threshold volume for a minor street approaching with one lane.

LSA

EXHIBIT E-6

● SATURDAY PEAK HOUR

■ SUNDAY PEAK HOUR

Church of the Woods

Daley Canyon Access Road/SR-18

Year 2009 Peak Hour Warrant

SOURCE: STATE OF CALIFORNIA, DEPARTMENT OF TRANSPORTATION, TRAFFIC MANUAL, FIGURE 9-9

R:\CTW430\July 2008\Signal Warrants\06_Rural_2009_Daley Canyon Access - 18 (7/7/2008)

PEAK HOUR VOLUME WARRANT
(RURAL AREAS)

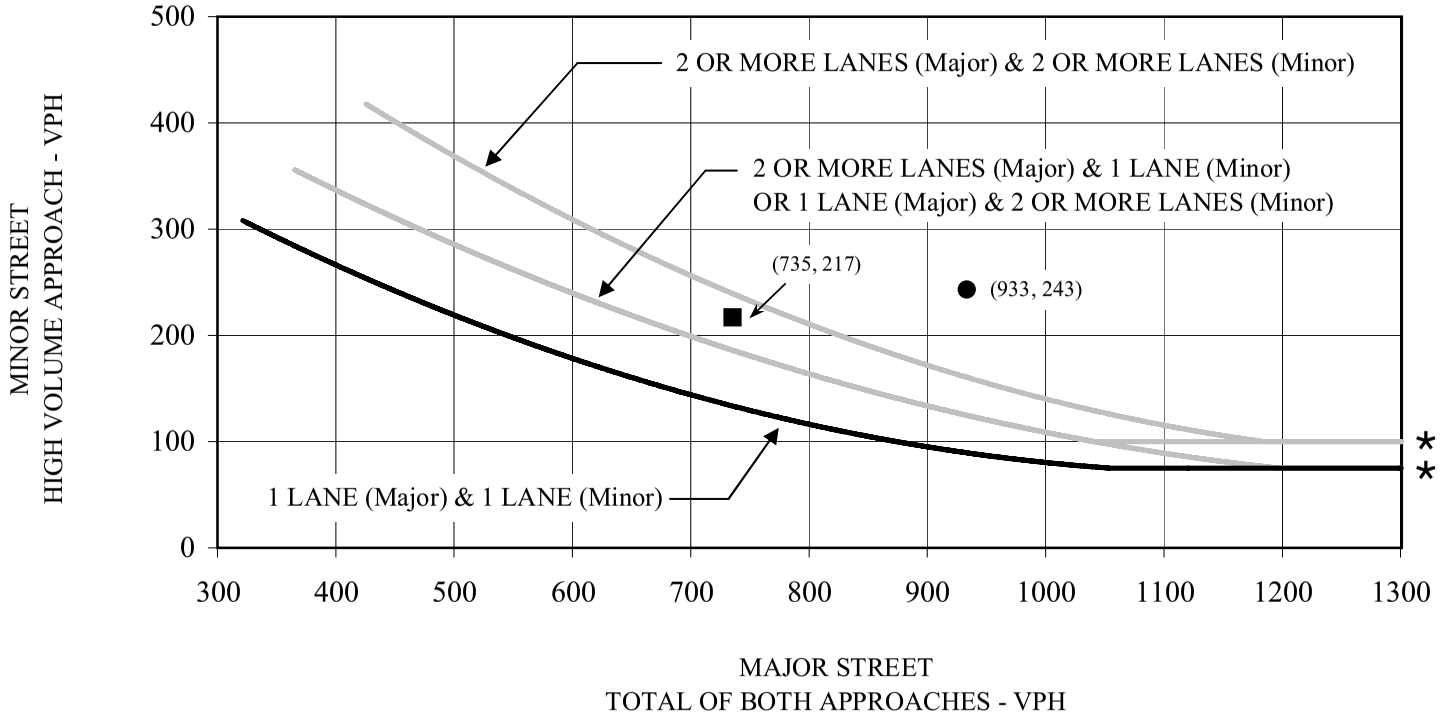

* 100 VPH applies as the lower threshold volume for a minor street approach with two or more lanes and 75 VPH applies as the lower threshold volume for a minor street approaching with one lane.

LSA

EXHIBIT E-7

● SATURDAY PEAK HOUR

■ SUNDAY PEAK HOUR

Church of the Woods

SR-173/SR-18

Year 2009 Peak Hour Warrant

SOURCE: STATE OF CALIFORNIA, DEPARTMENT OF TRANSPORTATION, TRAFFIC MANUAL, FIGURE 9-9

R:\CTW430\July 2008\Signal Warrants\07_Rural_2009_173 - 18 (7/7/2008)

PEAK HOUR VOLUME WARRANT
(RURAL AREAS)

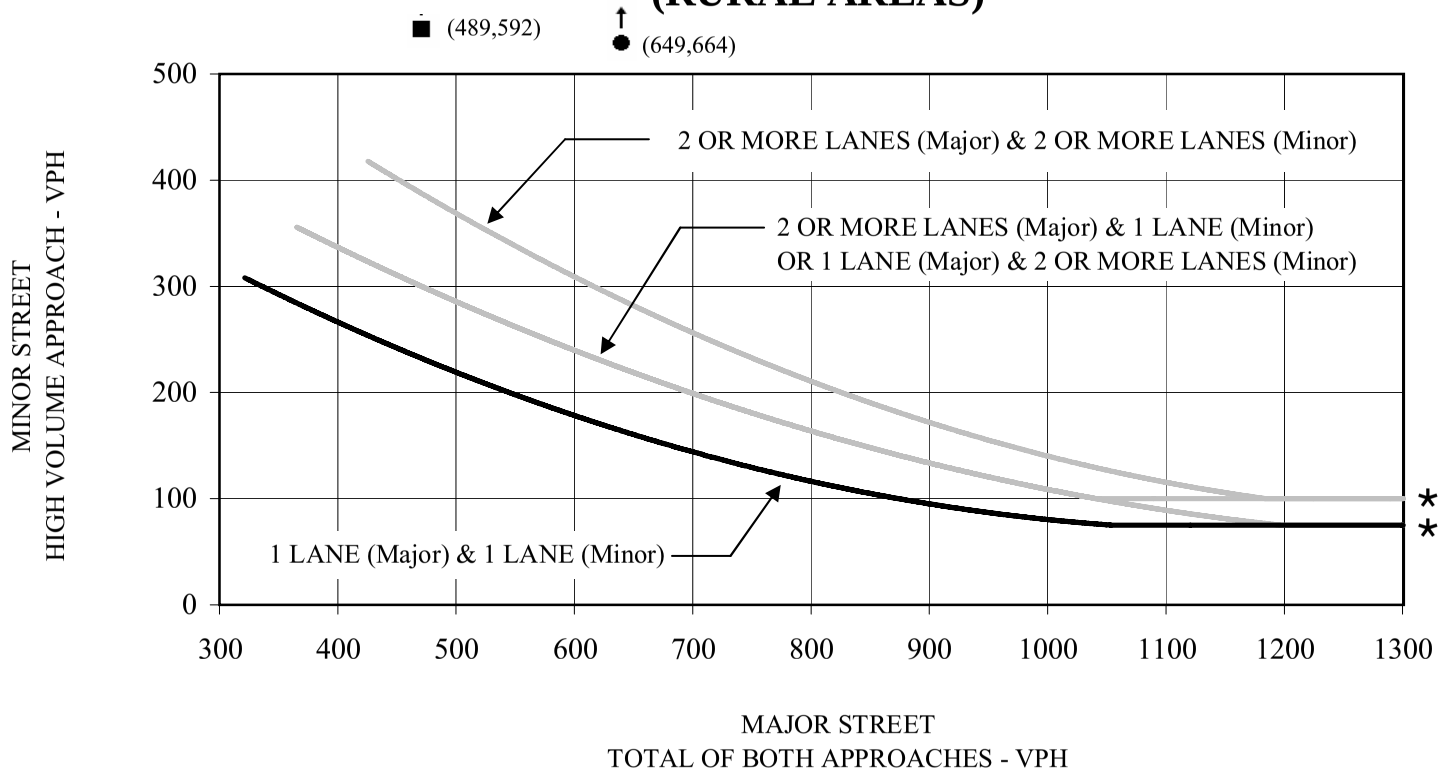

* 100 VPH applies as the lower threshold volume for a minor street approach with two or more lanes and 75 VPH applies as the lower threshold volume for a minor street approaching with one lane.

LSA

EXHIBIT E-8

● SATURDAY PEAK HOUR

■ SUNDAY PEAK HOUR

Church of the Woods

Grass Valley Road/SR-189

Year 2013 Peak Hour Warrant

SOURCE: STATE OF CALIFORNIA, DEPARTMENT OF TRANSPORTATION, TRAFFIC MANUAL, FIGURE 9-9

R:\CTW430\July 2008\Signal Warrants\08_Rural_2013_Grass Valley - 189 (7/7/2008)

PEAK HOUR VOLUME WARRANT
(RURAL AREAS)

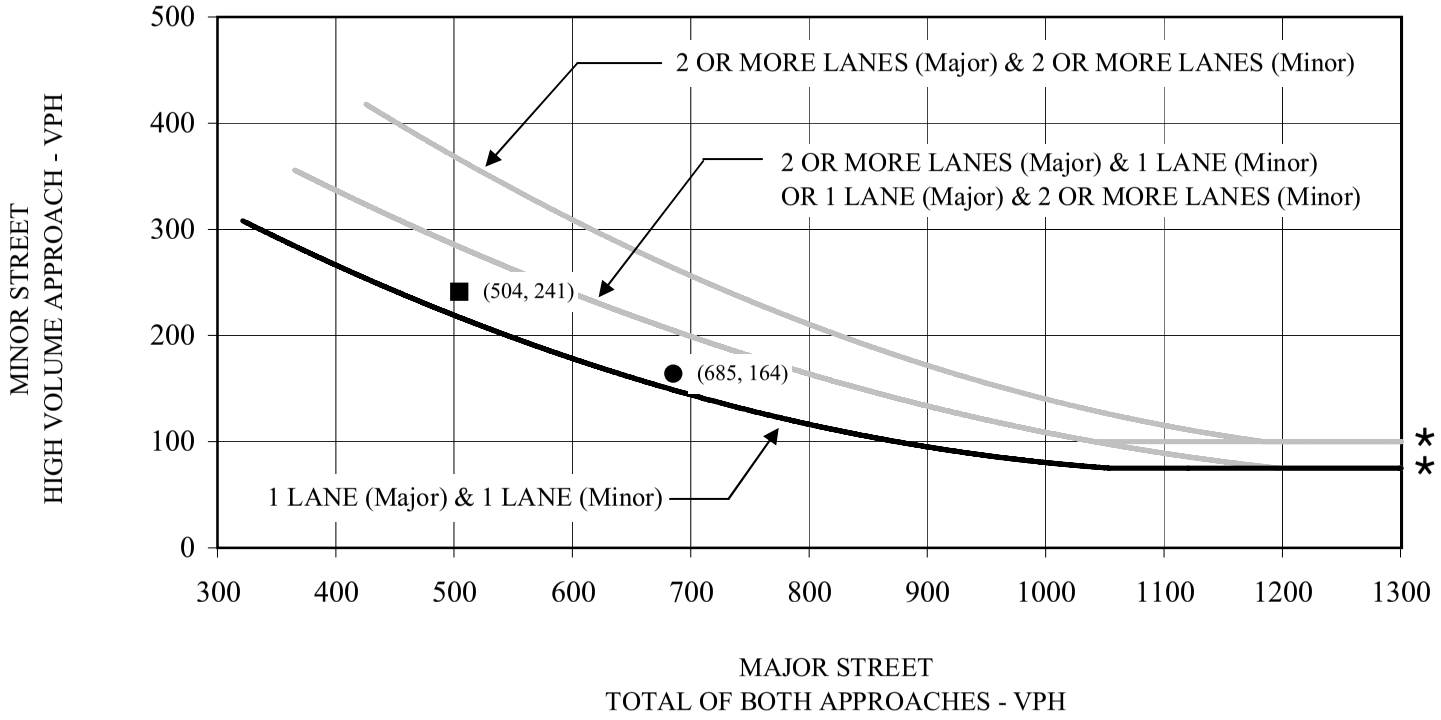

* 100 VPH applies as the lower threshold volume for a minor street approach with two or more lanes and 75 VPH applies as the lower threshold volume for a minor street approaching with one lane.

LSA

EXHIBIT E-9

● SATURDAY PEAK HOUR

■ SUNDAY PEAK HOUR

Church of the Woods

Lake Gregory Road/SR-189

Year 2013 Peak Hour Warrant

SOURCE: STATE OF CALIFORNIA, DEPARTMENT OF TRANSPORTATION, TRAFFIC MANUAL, FIGURE 9-9

R:\CTW430\July 2008\Signal Warrants\09_Rural_2013_Lake Gregory - 189 (7/7/2008)

PEAK HOUR VOLUME WARRANT
(RURAL AREAS)

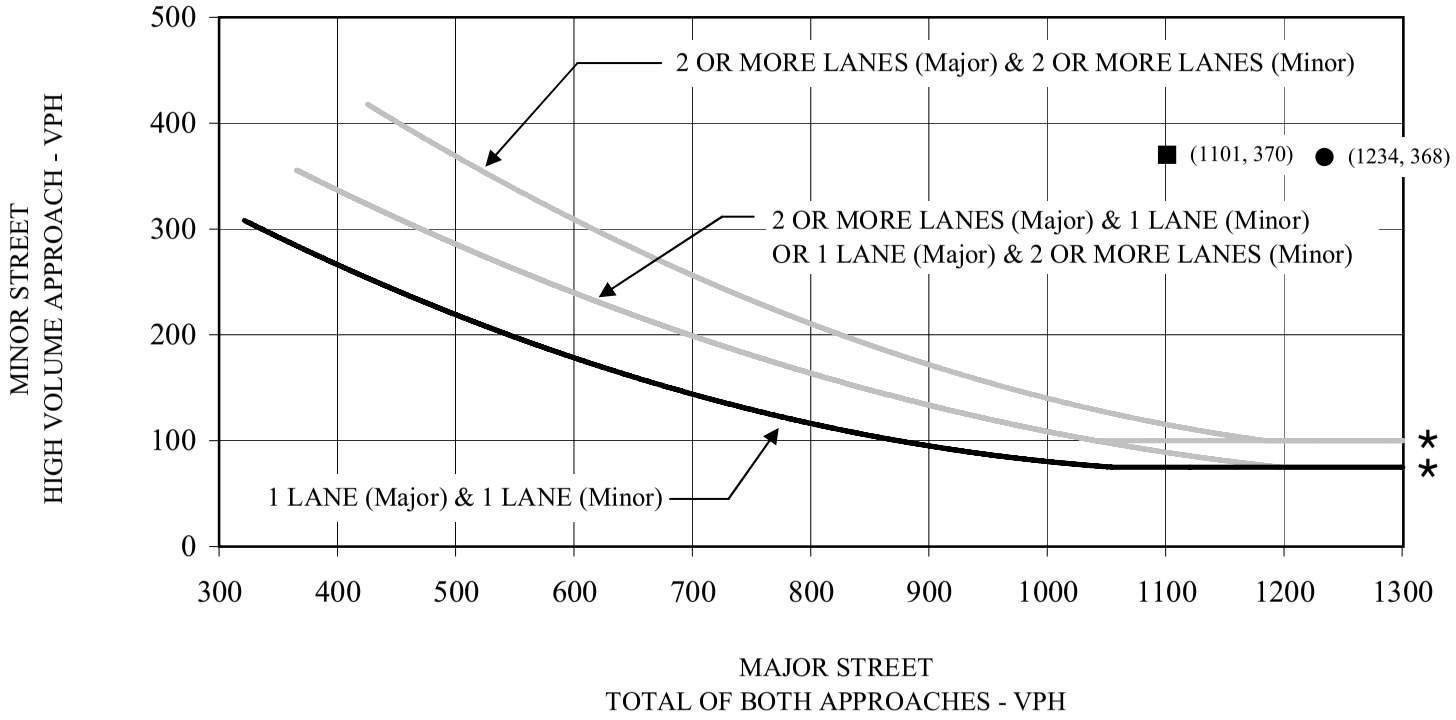

* 100 VPH applies as the lower threshold volume for a minor street approach with two or more lanes and 75 VPH applies as the lower threshold volume for a minor street approaching with one lane.

LSA

EXHIBIT E-10

● SATURDAY PEAK HOUR

■ SUNDAY PEAK HOUR

Church of the Woods

Lake Gregory Road/SR-18

Year 2013 Peak Hour Warrant

SOURCE: STATE OF CALIFORNIA, DEPARTMENT OF TRANSPORTATION, TRAFFIC MANUAL, FIGURE 9-9

R:\CTW430\July 2008\Signal Warrants\10_Rural_2013_Lake Gregory - 18 (7/7/2008)

PEAK HOUR VOLUME WARRANT
(RURAL AREAS)

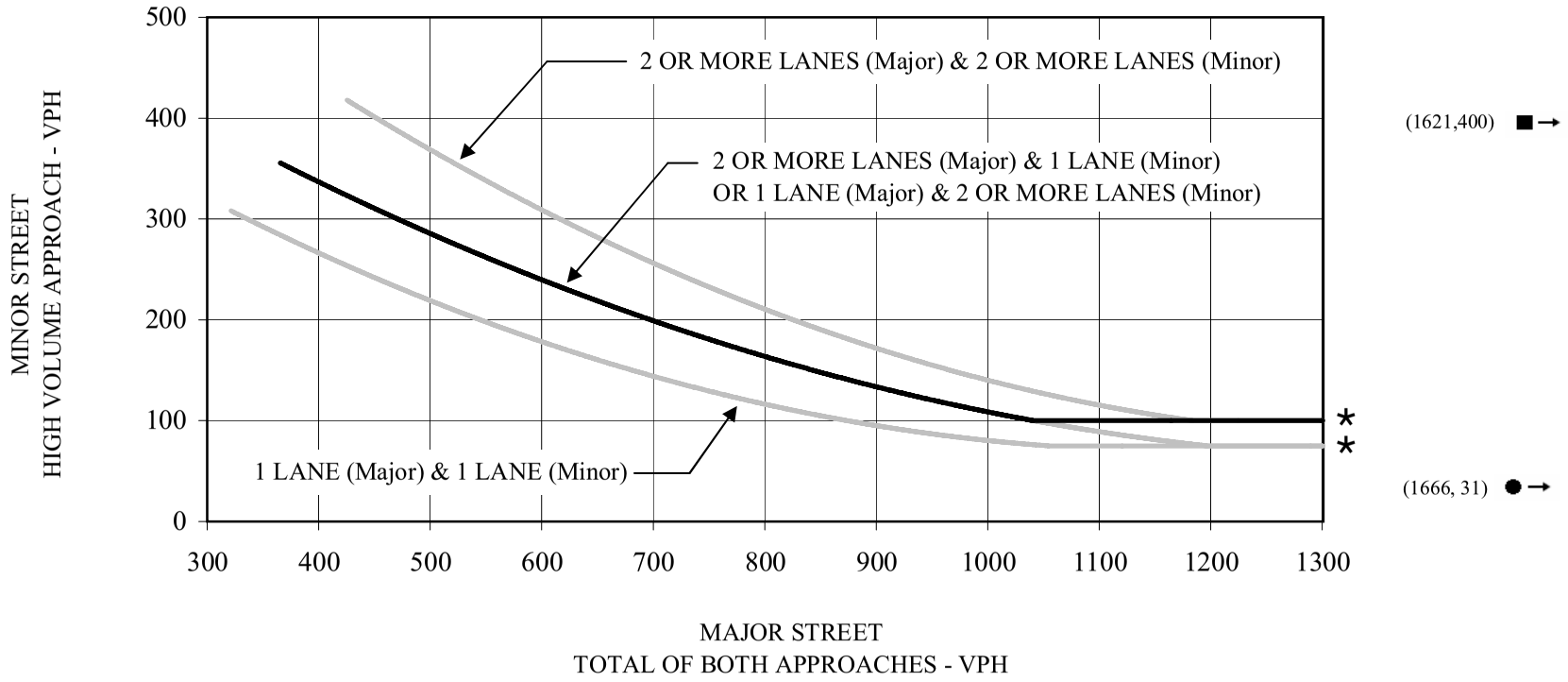

* 100 VPH applies as the lower threshold volume for a minor street approach with two or more lanes and 75 VPH applies as the lower threshold volume for a minor street approaching with one lane.

LSA

EXHIBIT E-11

● SATURDAY PEAK HOUR

■ SUNDAY PEAK HOUR

Church of the Woods

Project Access/SR-18

Year 2013 Peak Hour Warrant

SOURCE: STATE OF CALIFORNIA, DEPARTMENT OF TRANSPORTATION, TRAFFIC MANUAL, FIGURE 9-9

R:\CTW430\July 2008\Signal Warrants\11_Rural_2013_Project Access - 18 (7/7/2008)

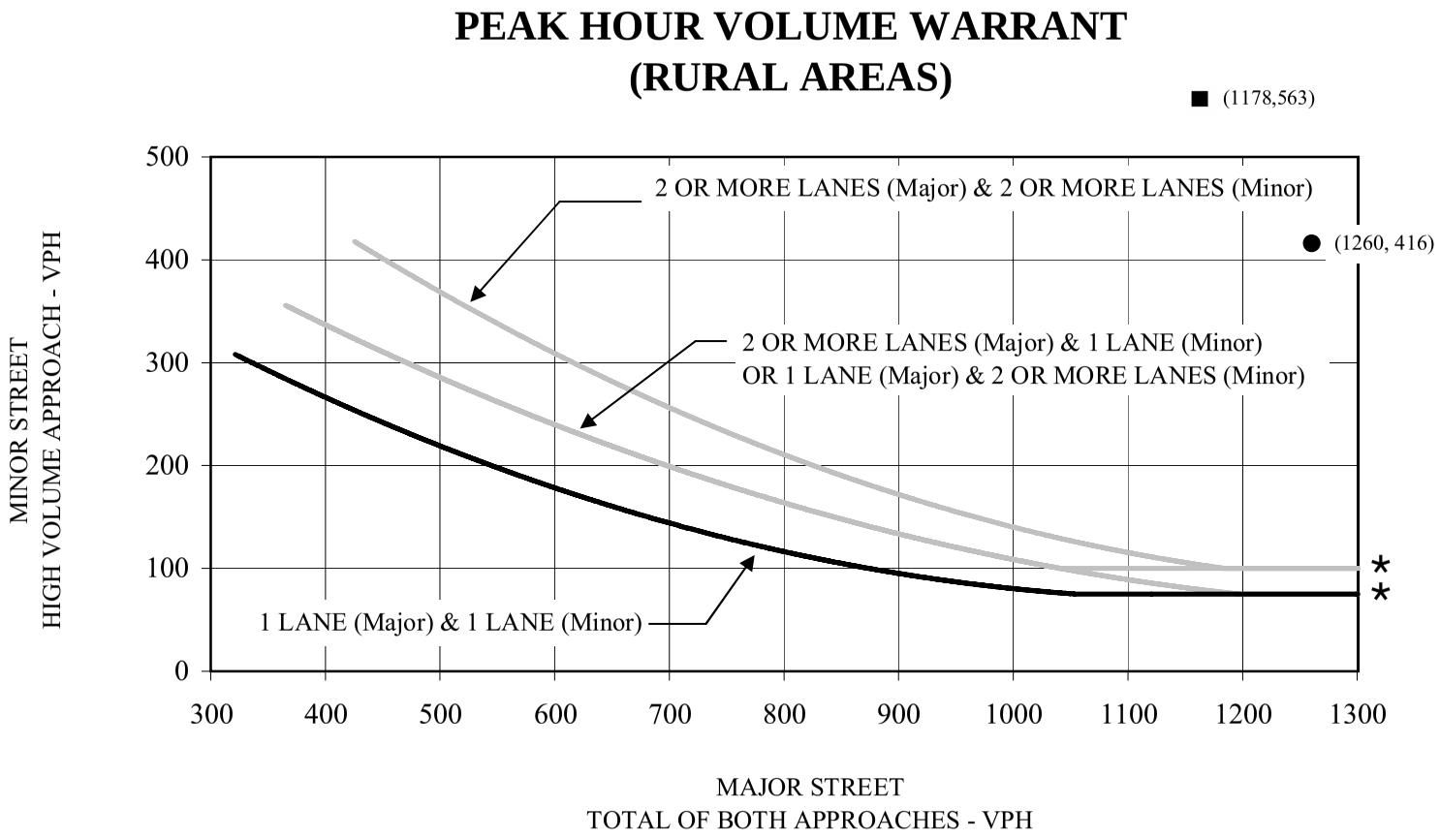

* 100 VPH applies as the lower threshold volume for a minor street approach with two or more lanes and 75 VPH applies as the lower threshold volume for a minor street approaching with one lane.

LSA

EXHIBIT E-12

● SATURDAY PEAK HOUR

■ SUNDAY PEAK HOUR

Church of the Woods

Daley Canyon Road/SR-18

Year 2013 Peak Hour Warrant

SOURCE: STATE OF CALIFORNIA, DEPARTMENT OF TRANSPORTATION, TRAFFIC MANUAL, FIGURE 9-9

R:\CTW430\July 2008\Signal Warrants\12_Rural_2013_Daley Canyon - 18 (7/7/2008)

PEAK HOUR VOLUME WARRANT
(RURAL AREAS)

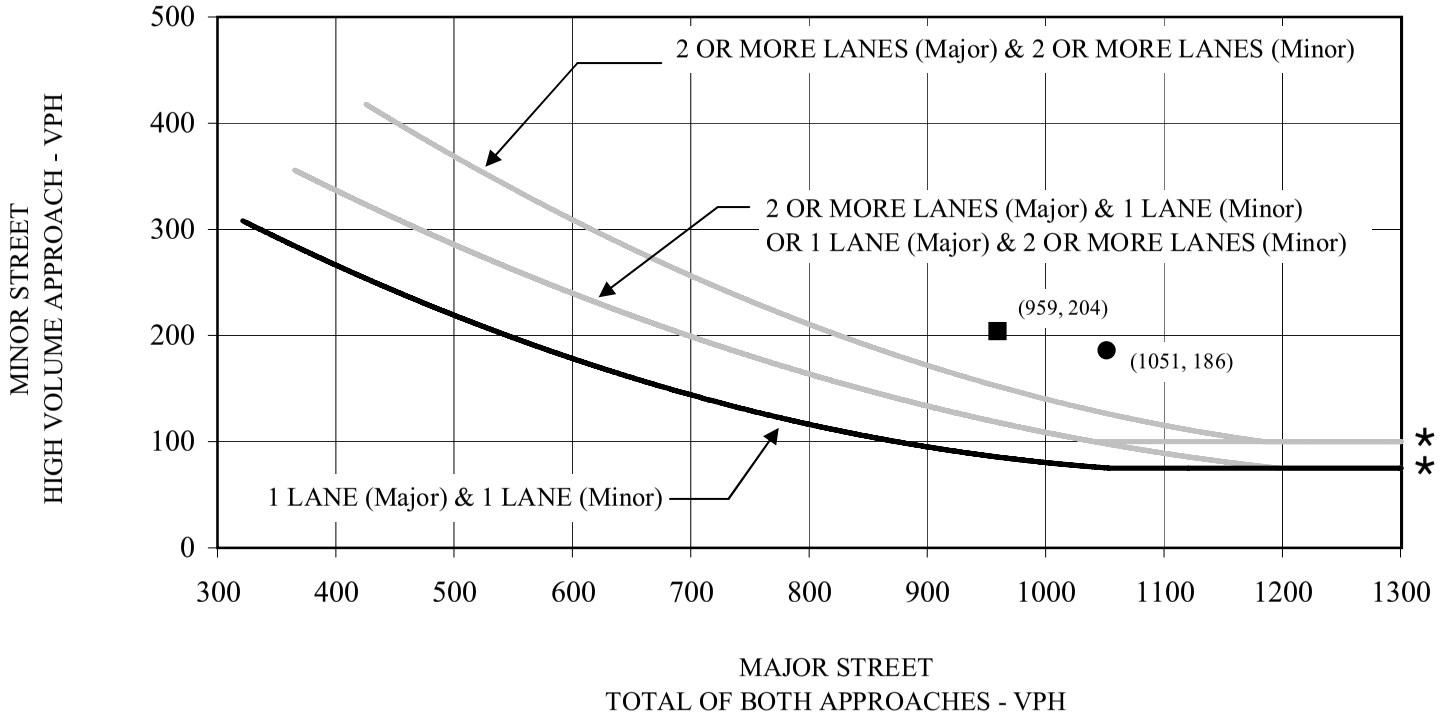

* 100 VPH applies as the lower threshold volume for a minor street approach with two or more lanes and 75 VPH applies as the lower threshold volume for a minor street approaching with one lane.

LSA

EXHIBIT E-13

● SATURDAY PEAK HOUR

■ SUNDAY PEAK HOUR

Church of the Woods

Daley Canyon Access Road/SR-18

Year 2013 Peak Hour Warrant

SOURCE: STATE OF CALIFORNIA, DEPARTMENT OF TRANSPORTATION, TRAFFIC MANUAL, FIGURE 9-9

R:\CTW430\July 2008\Signal Warrants\13_Rural_2013_Daley Canyon Access - 18 (7/7/2008)

PEAK HOUR VOLUME WARRANT
(RURAL AREAS)

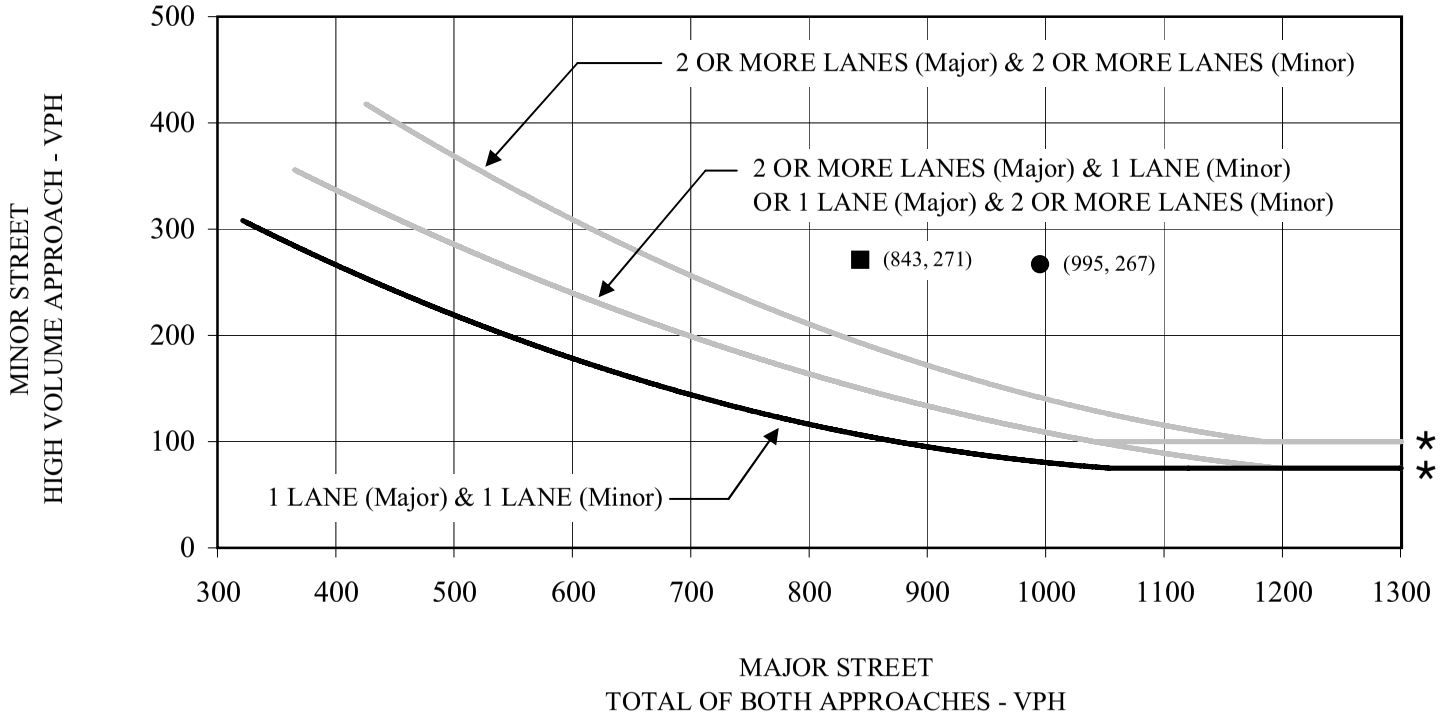

* 100 VPH applies as the lower threshold volume for a minor street approach with two or more lanes and 75 VPH applies as the lower threshold volume for a minor street approaching with one lane.

LSA

EXHIBIT E-14

● SATURDAY PEAK HOUR

■ SUNDAY PEAK HOUR

Church of the Woods

SR-173/SR-18

Year 2013 Peak Hour Warrant

SOURCE: STATE OF CALIFORNIA, DEPARTMENT OF TRANSPORTATION, TRAFFIC MANUAL, FIGURE 9-9

R:\CTW430\July 2008\Signal Warrants\14_Rural_2013_173 - 18 (7/7/2008)

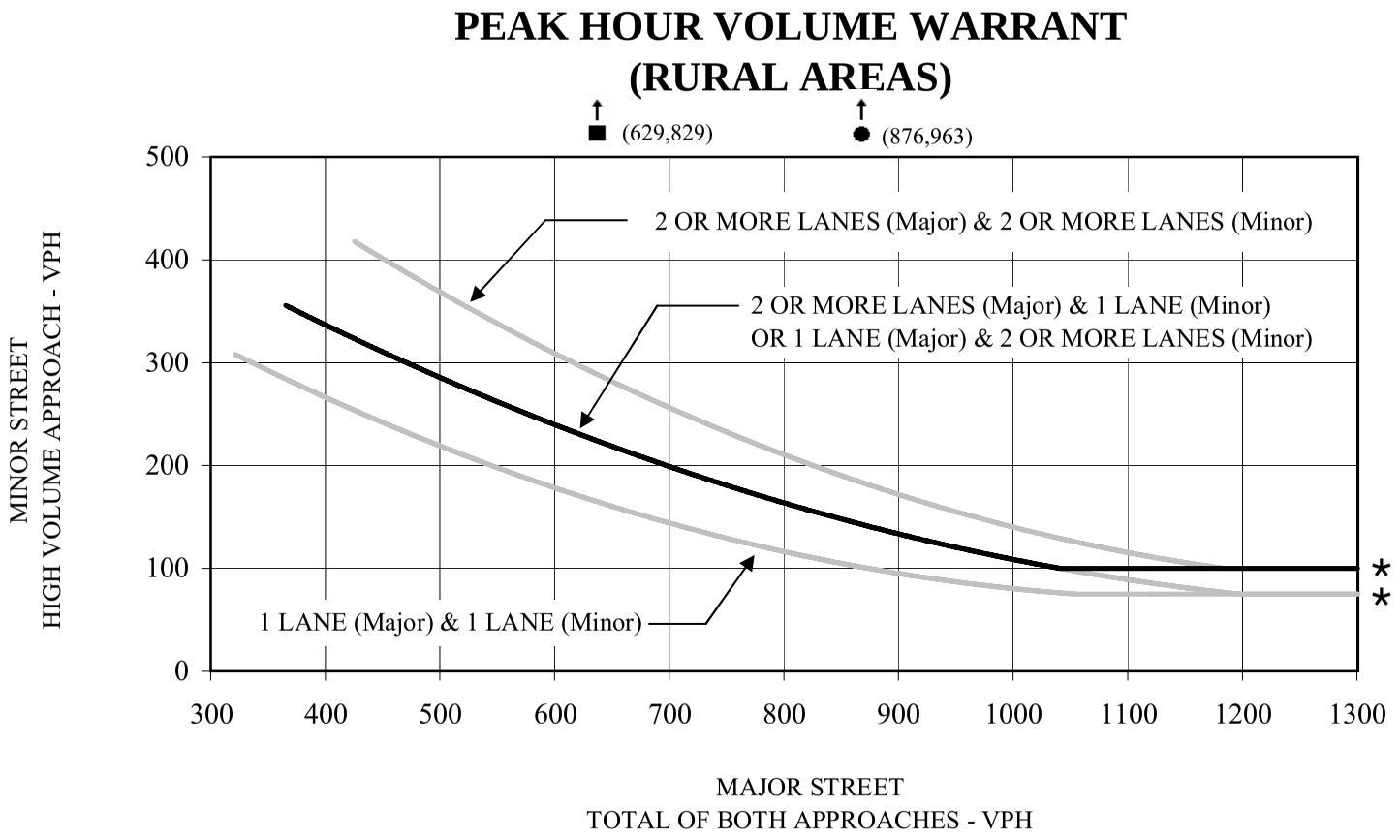

* 100 VPH applies as the lower threshold volume for a minor street approach with two or more lanes and 75 VPH applies as the lower threshold volume for a minor street approaching with one lane.

LSA

EXHIBIT E-15

● SATURDAY PEAK HOUR

■ SUNDAY PEAK HOUR

Church of the Woods

Grass Valley Road/SR-189

Year 2030 Peak Hour Warrant

SOURCE: STATE OF CALIFORNIA, DEPARTMENT OF TRANSPORTATION, TRAFFIC MANUAL, FIGURE 9-9

R:\CTW430\July 2008\Signal Warrants\15_Rural_2030_Grass Valley - 189 (7/7/2008)

PEAK HOUR VOLUME WARRANT
(RURAL AREAS)

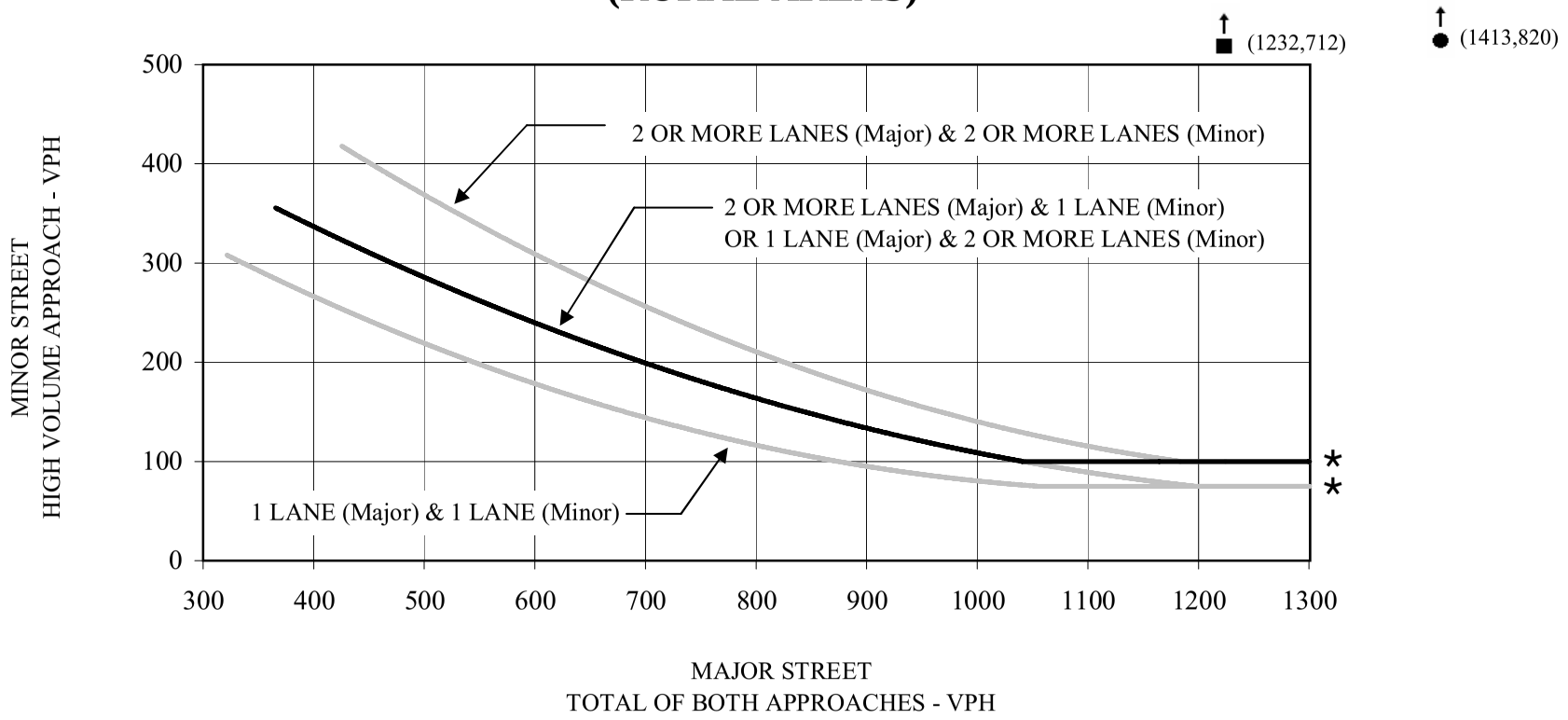

* 100 VPH applies as the lower threshold volume for a minor street approach with two or more lanes and 75 VPH applies as the lower threshold volume for a minor street approaching with one lane.

LSA

EXHIBIT E-16

● SATURDAY PEAK HOUR

■ SUNDAY PEAK HOUR

Church of the Woods

Daley Canyon Road/SR-189

Year 2030 Peak Hour Warrant

SOURCE: STATE OF CALIFORNIA, DEPARTMENT OF TRANSPORTATION, TRAFFIC MANUAL, FIGURE 9-9

R:\CTW430\July 2008\Signal Warrants\16_Rural_2030_Daley - 189 (7/7/2008)

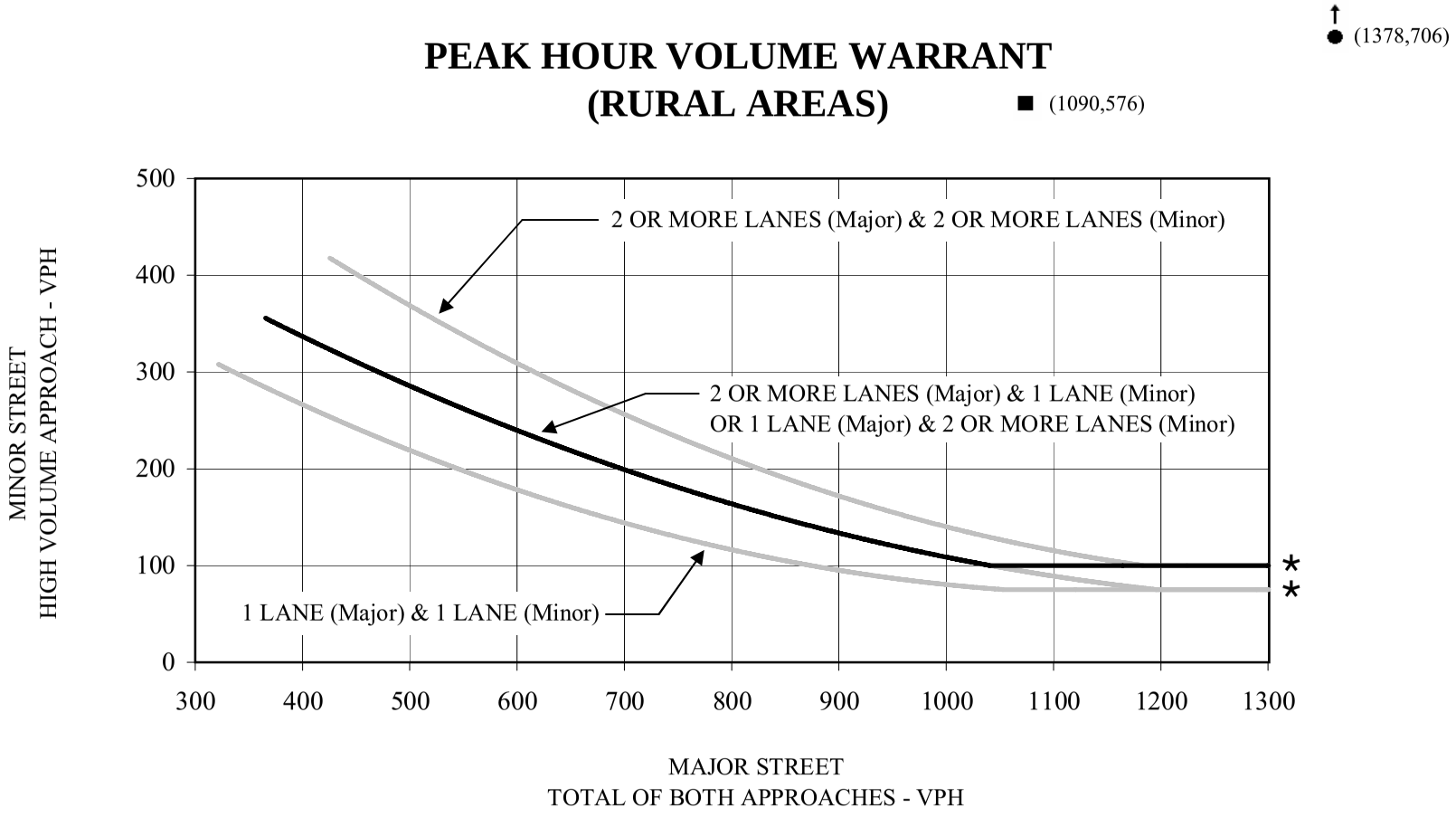

* 100 VPH applies as the lower threshold volume for a minor street approach with two or more lanes and 75 VPH applies as the lower threshold volume for a minor street approaching with one lane.

LSA

EXHIBIT E-17

● SATURDAY PEAK HOUR

■ SUNDAY PEAK HOUR

Church of the Woods

North Bay Road/SR-189

Year 2030 Peak Hour Warrant

SOURCE: STATE OF CALIFORNIA, DEPARTMENT OF TRANSPORTATION, TRAFFIC MANUAL, FIGURE 9-9

R:\CTW430\July 2008\Signal Warrants\17_Rural_2030_North Bay - 189 (7/7/2008)

PEAK HOUR VOLUME WARRANT
(RURAL AREAS)

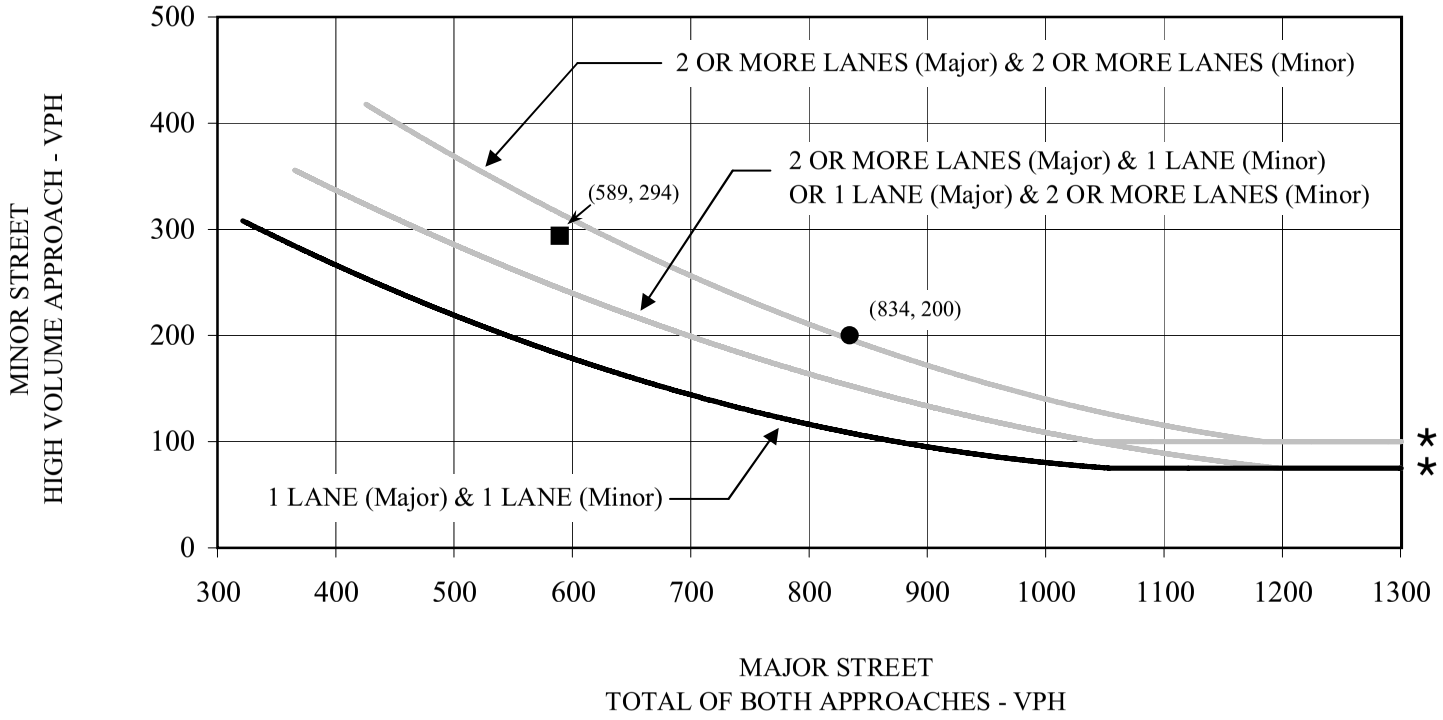

* 100 VPH applies as the lower threshold volume for a minor street approach with two or more lanes and 75 VPH applies as the lower threshold volume for a minor street approaching with one lane.

LSA

EXHIBIT E-18

● SATURDAY PEAK HOUR

■ SUNDAY PEAK HOUR

Church of the Woods

Lake Gregory Road/SR-189

Year 2030 Peak Hour Warrant

SOURCE: STATE OF CALIFORNIA, DEPARTMENT OF TRANSPORTATION, TRAFFIC MANUAL, FIGURE 9-9

R:\CTW430\July 2008\Signal Warrants\18_Rural_2030_Lake Gregory - 189 (7/7/2008)

PEAK HOUR VOLUME WARRANT
(RURAL AREAS)

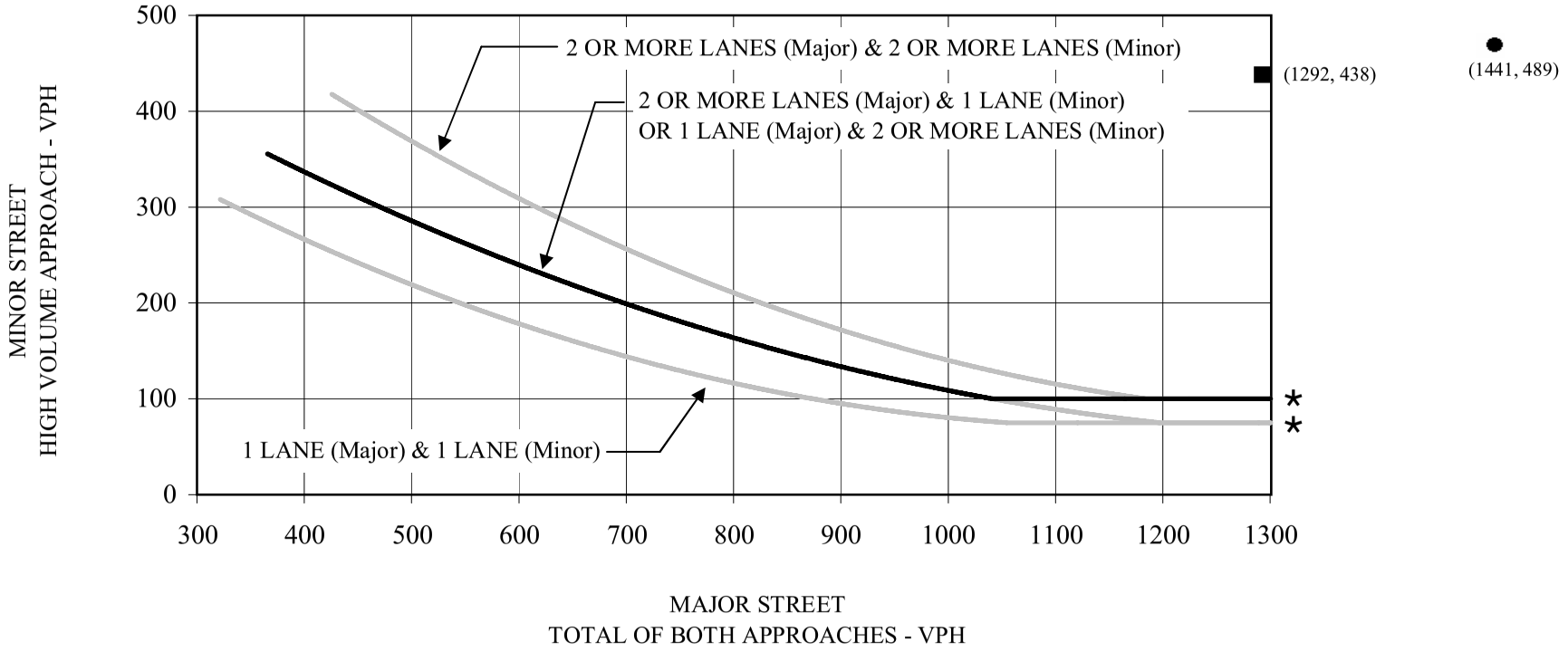

* 100 VPH applies as the lower threshold volume for a minor street approach with two or more lanes and 75 VPH applies as the lower threshold volume for a minor street approaching with one lane.

LSA

EXHIBIT E-19

● SATURDAY PEAK HOUR

■ SUNDAY PEAK HOUR

Church of the Woods

Lake Gregory Road/SR-18

Year 2030 Peak Hour Warrant

SOURCE: STATE OF CALIFORNIA, DEPARTMENT OF TRANSPORTATION, TRAFFIC MANUAL, FIGURE 9-9

R:\CTW430\July 2008\Signal Warrants\19_Rural_2030_Lake Gregory - 18 (7/7/2008)

PEAK HOUR VOLUME WARRANT
(RURAL AREAS)

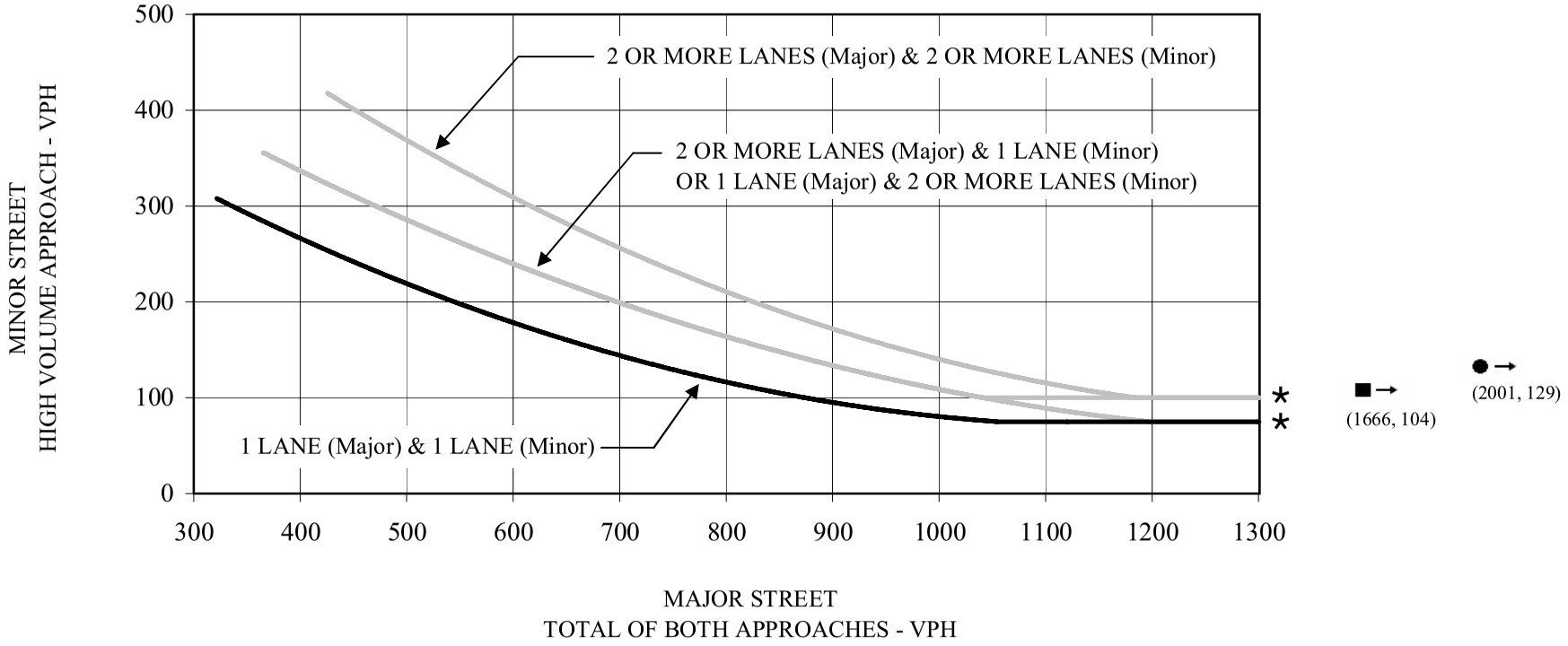

* 100 VPH applies as the lower threshold volume for a minor street approach with two or more lanes and 75 VPH applies as the lower threshold volume for a minor street approaching with one lane.

LSA

EXHIBIT E-20

● SATURDAY PEAK HOUR

■ SUNDAY PEAK HOUR

Church of the Woods

Bear Springs Road/SR-18

Year 2030 Peak Hour Warrant

SOURCE: STATE OF CALIFORNIA, DEPARTMENT OF TRANSPORTATION, TRAFFIC MANUAL, FIGURE 9-9

R:\CTW430\July 2008\Signal Warrants\20_Rural_2030_Bear Springs - 18 (7/7/2008)

PEAK HOUR VOLUME WARRANT
(RURAL AREAS)

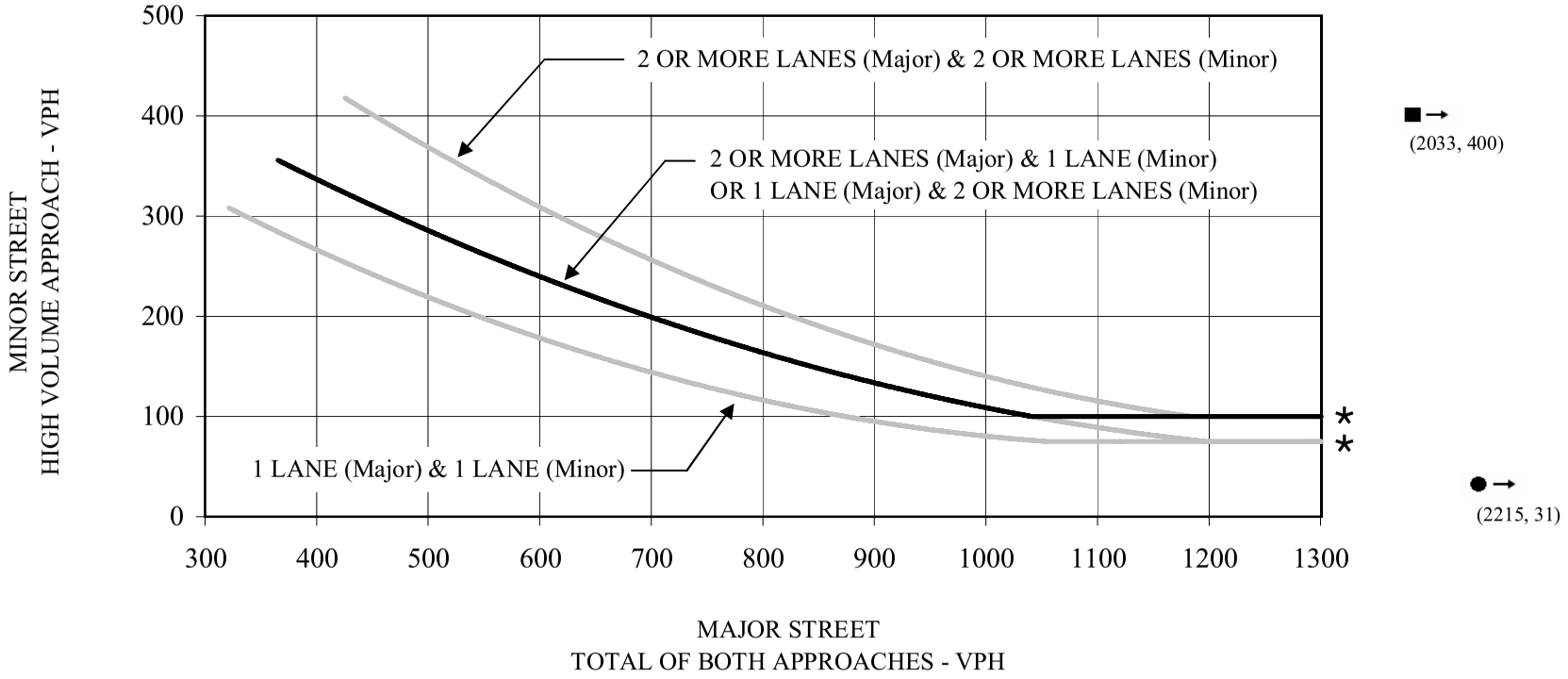

* 100 VPH applies as the lower threshold volume for a minor street approach with two or more lanes and 75 VPH applies as the lower threshold volume for a minor street approaching with one lane.

LSA

EXHIBIT E-21

● SATURDAY PEAK HOUR

■ SUNDAY PEAK HOUR

Church of the Woods

Project Access/SR-18

Year 2030 Peak Hour Warrant

SOURCE: STATE OF CALIFORNIA, DEPARTMENT OF TRANSPORTATION, TRAFFIC MANUAL, FIGURE 9-9

R:\CTW430\July 2008\Signal Warrants\21_Rural_2030_Project Access - 18 (7/7/2008)

PEAK HOUR VOLUME WARRANT
(RURAL AREAS)

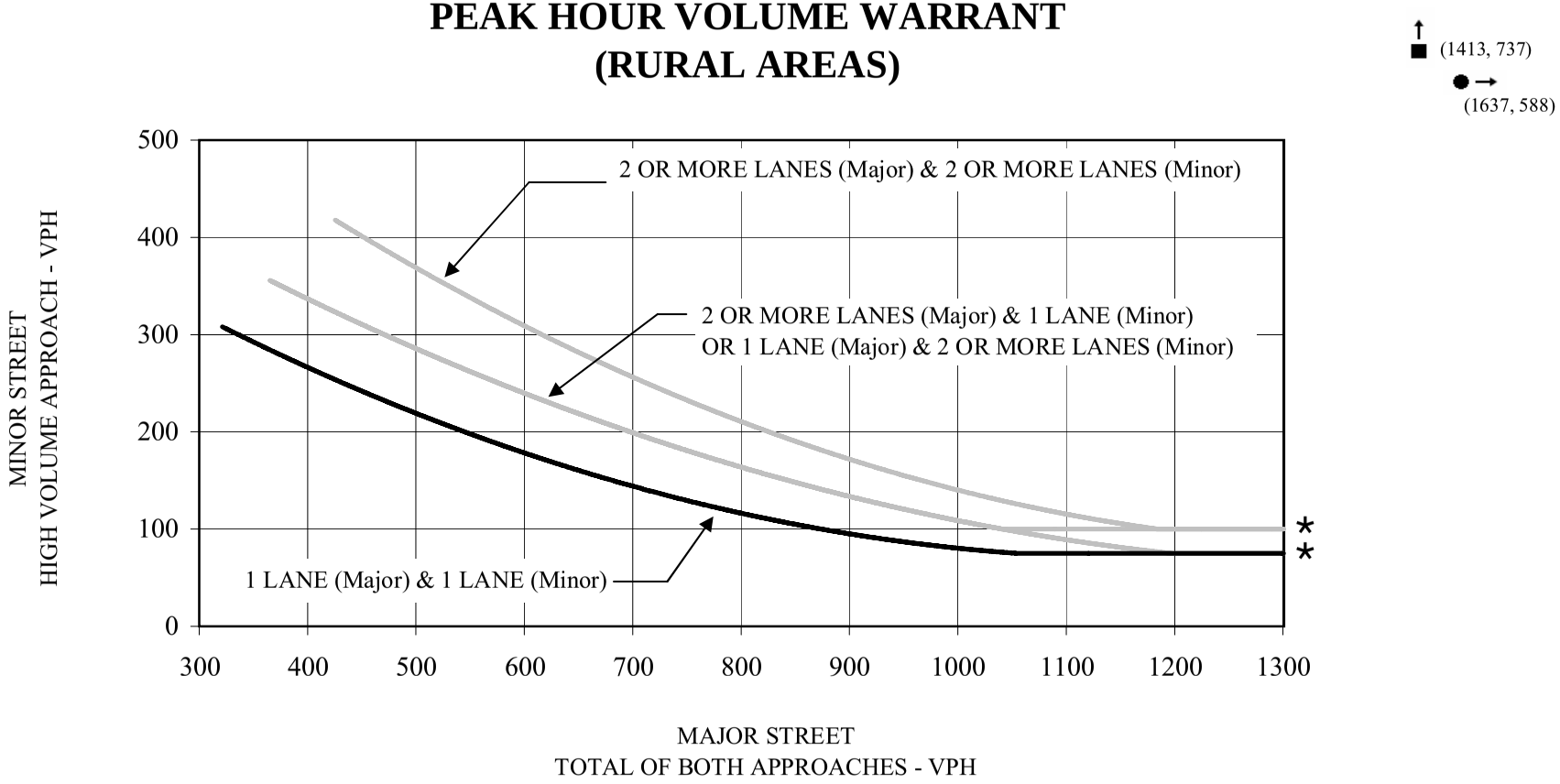

* 100 VPH applies as the lower threshold volume for a minor street approach with two or more lanes and 75 VPH applies as the lower threshold volume for a minor street approaching with one lane.

LSA

EXHIBIT E-22

● SATURDAY PEAK HOUR

■ SUNDAY PEAK HOUR

Church of the Woods

Daley Canyon Road/SR-18

Year 2030 Peak Hour Warrant

SOURCE: STATE OF CALIFORNIA, DEPARTMENT OF TRANSPORTATION, TRAFFIC MANUAL, FIGURE 9-9

R:\CTW430\July 2008\Signal Warrants\22_Rural_2030_Daley Canyon - 18 (7/7/2008)

PEAK HOUR VOLUME WARRANT
(RURAL AREAS)

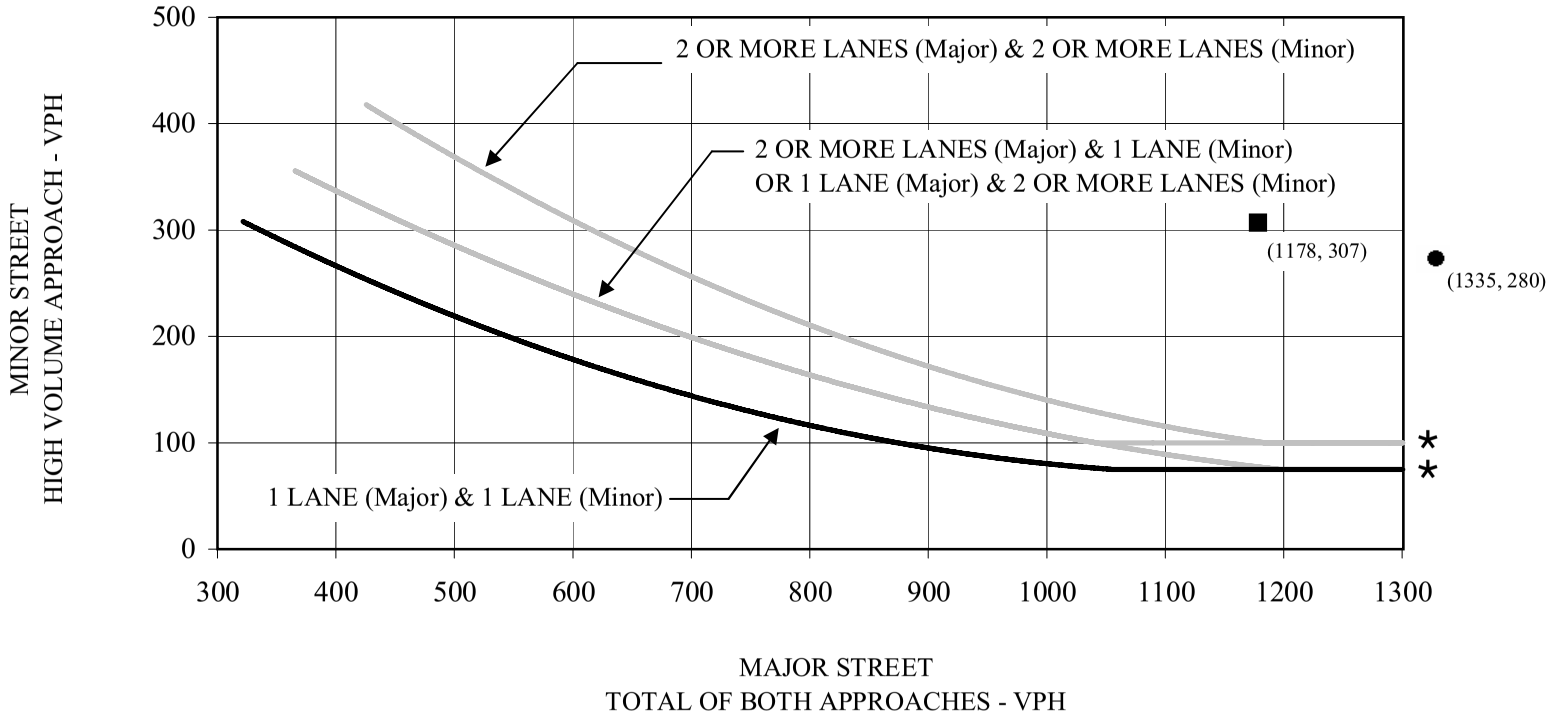

* 100 VPH applies as the lower threshold volume for a minor street approach with two or more lanes and 75 VPH applies as the lower threshold volume for a minor street approaching with one lane.

LSA

EXHIBIT E-23

● SATURDAY PEAK HOUR

■ SUNDAY PEAK HOUR

Church of the Woods

Daley Canyon Access Road/SR-18

Year 2030 Peak Hour Warrant

SOURCE: STATE OF CALIFORNIA, DEPARTMENT OF TRANSPORTATION, TRAFFIC MANUAL, FIGURE 9-9

R:\CTW430\July 2008\Signal Warrants\23_Rural_2030_Daley Canyon Access - 18 (7/7/2008)

PEAK HOUR VOLUME WARRANT
(RURAL AREAS)

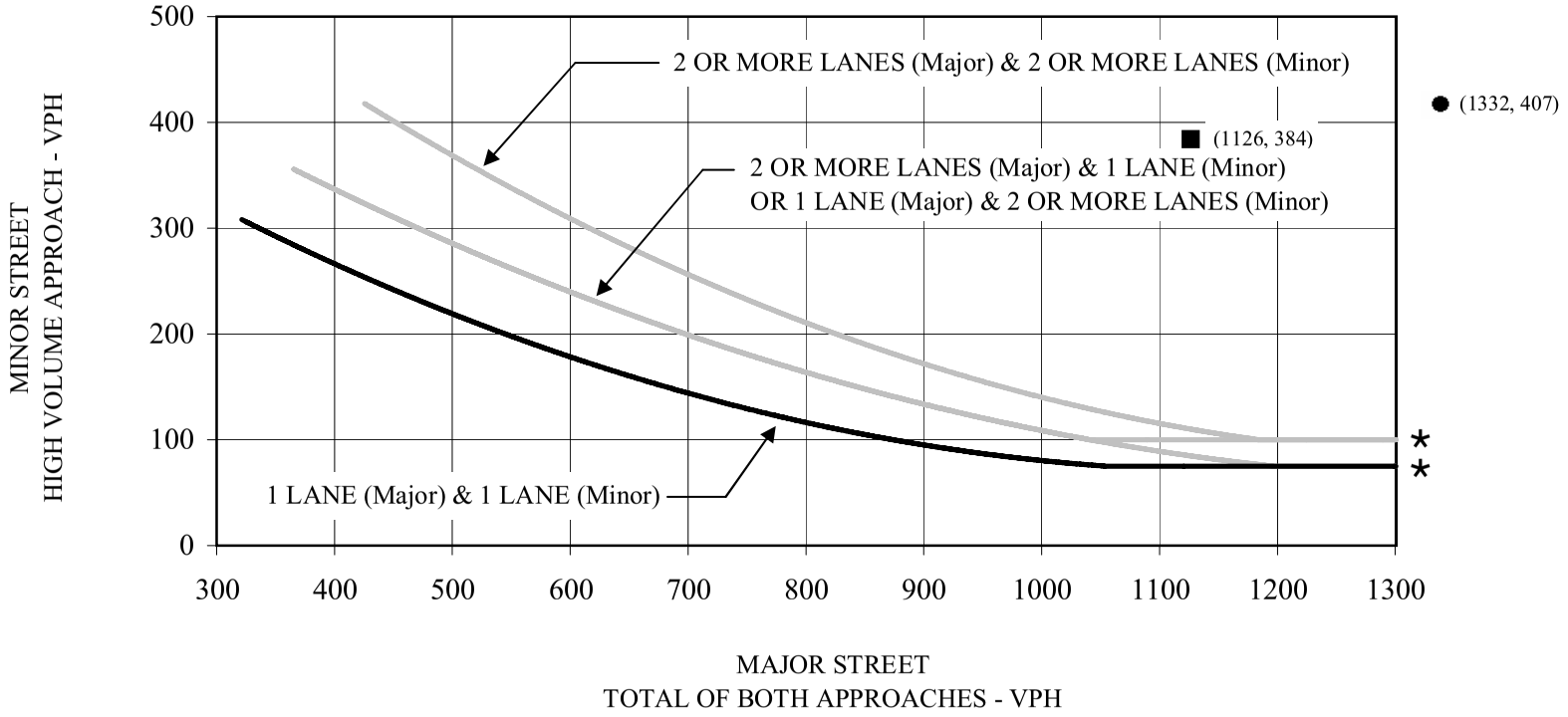

* 100 VPH applies as the lower threshold volume for a minor street approach with two or more lanes and 75 VPH applies as the lower threshold volume for a minor street approaching with one lane.

LSA

EXHIBIT E-24

● SATURDAY PEAK HOUR

■ SUNDAY PEAK HOUR

Church of the Woods

SR-173/SR-18

Year 2030 Peak Hour Warrant

SOURCE: STATE OF CALIFORNIA, DEPARTMENT OF TRANSPORTATION, TRAFFIC MANUAL, FIGURE 9-9

R:\CTW430\July 2008\Signal Warrants\24_Rural_2030_173 - 18 (7/7/2008)

APPENDIX F

CONCEPTUAL DRAWINGS – ALTERNATIVE MITIGATION MEASURES

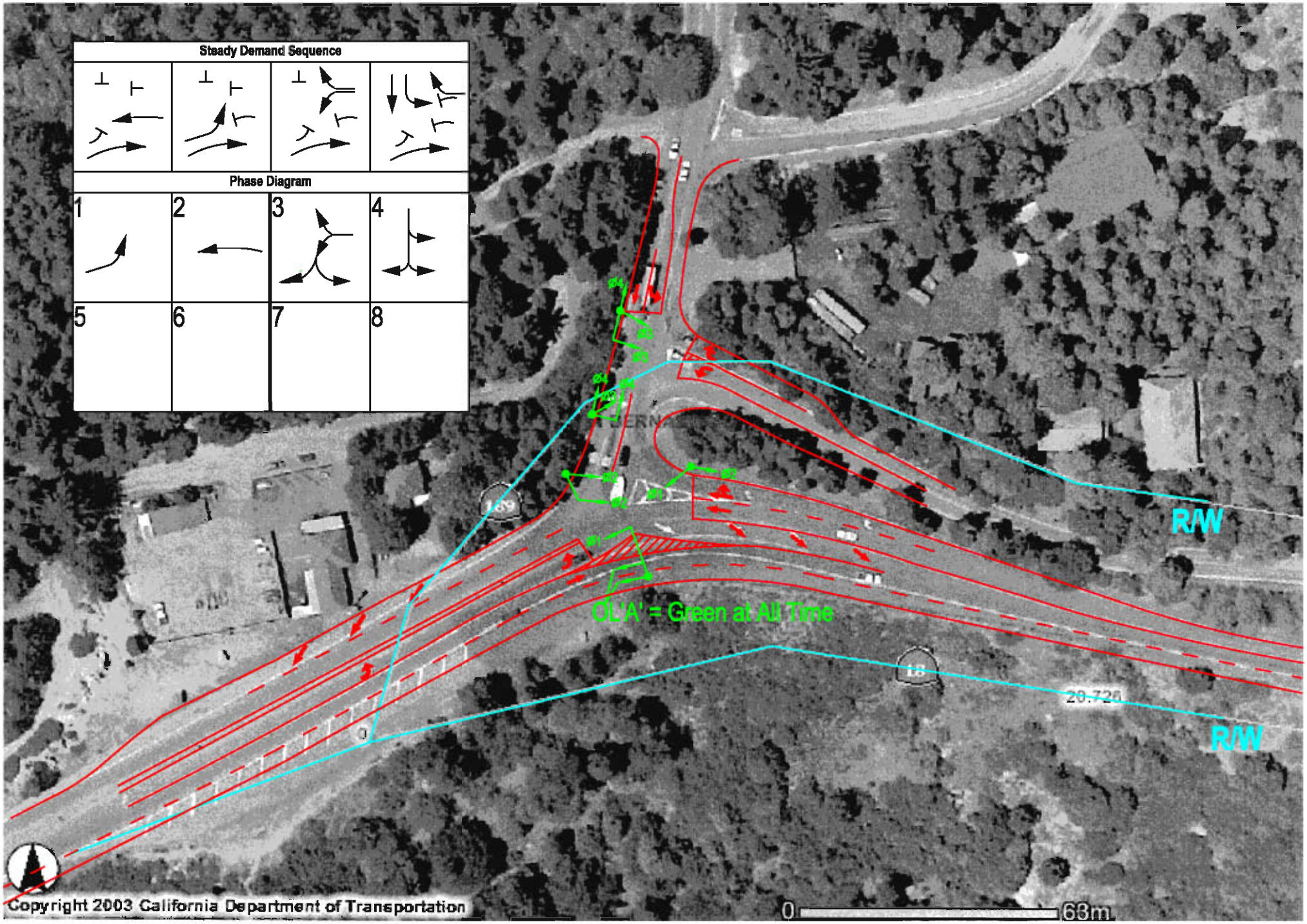

DKS Associates
TRANSPORTATION SOLUTIONS

Figure 9
Signalization Concept

DKS Associates
TRANSPORTATION SOLUTIONS

Figure 10
Roundabout Concept

Figure 11

DRAFT Grade-Separated Interchange Concept
(Half-Section Shown Only)

DKS Associates
TRANSPORTATION SOLUTIONS

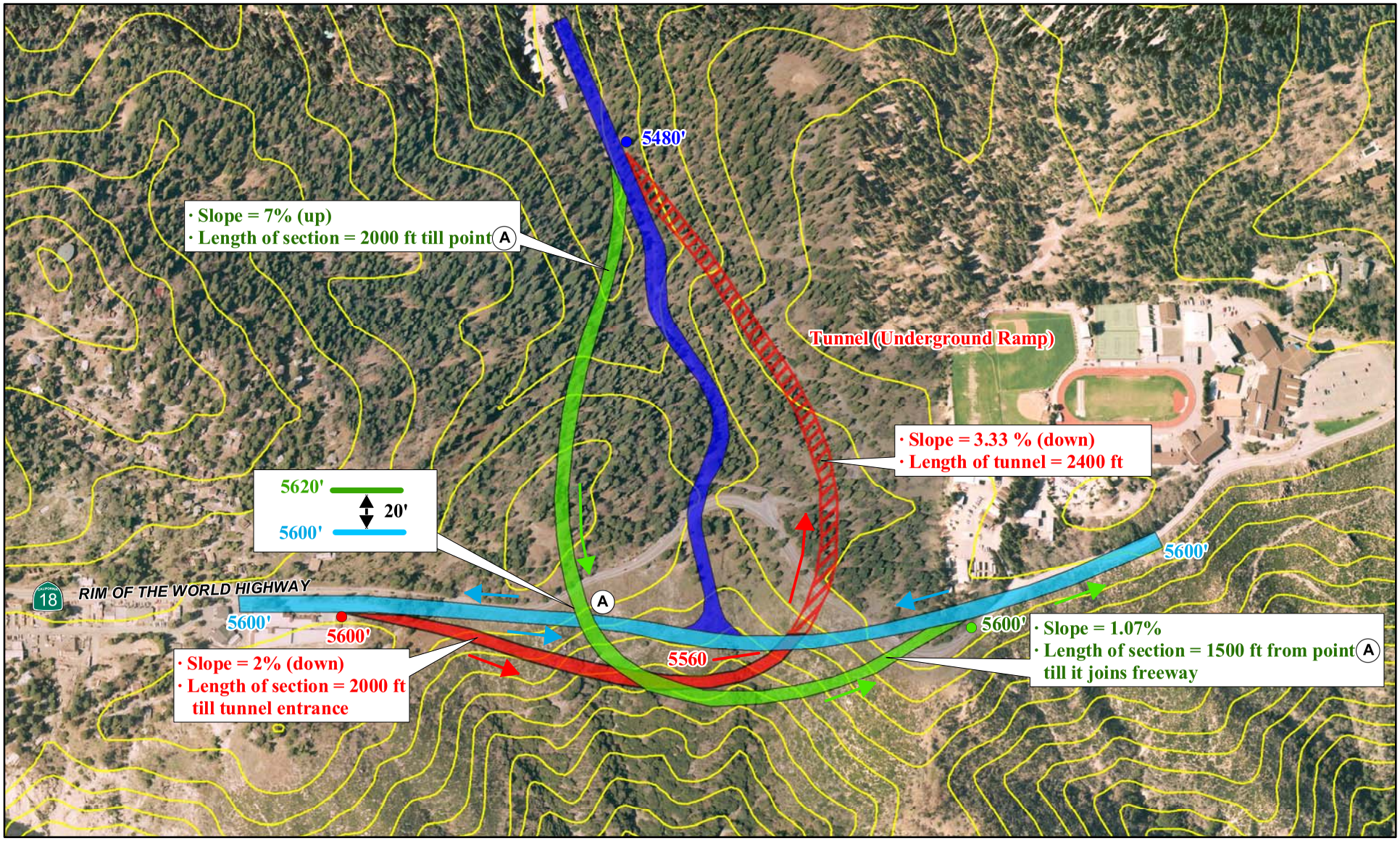

LSA

N

0 300 600

FEET

SOURCE: AirPhotoUSA, 2007

- Daley Canyon Road
- Rim of the World Highway
- Upper Ramp
- Lower Ramp
- Tunnel (Underground Ramp)
- Countours

FIGURE 3

Church of the Woods

Daley Canyon / Highway 18 Interchange Alternative

R:\CTW430\G\Reports\Traffic\AlternativeInterchange.mxd (04/11/08)

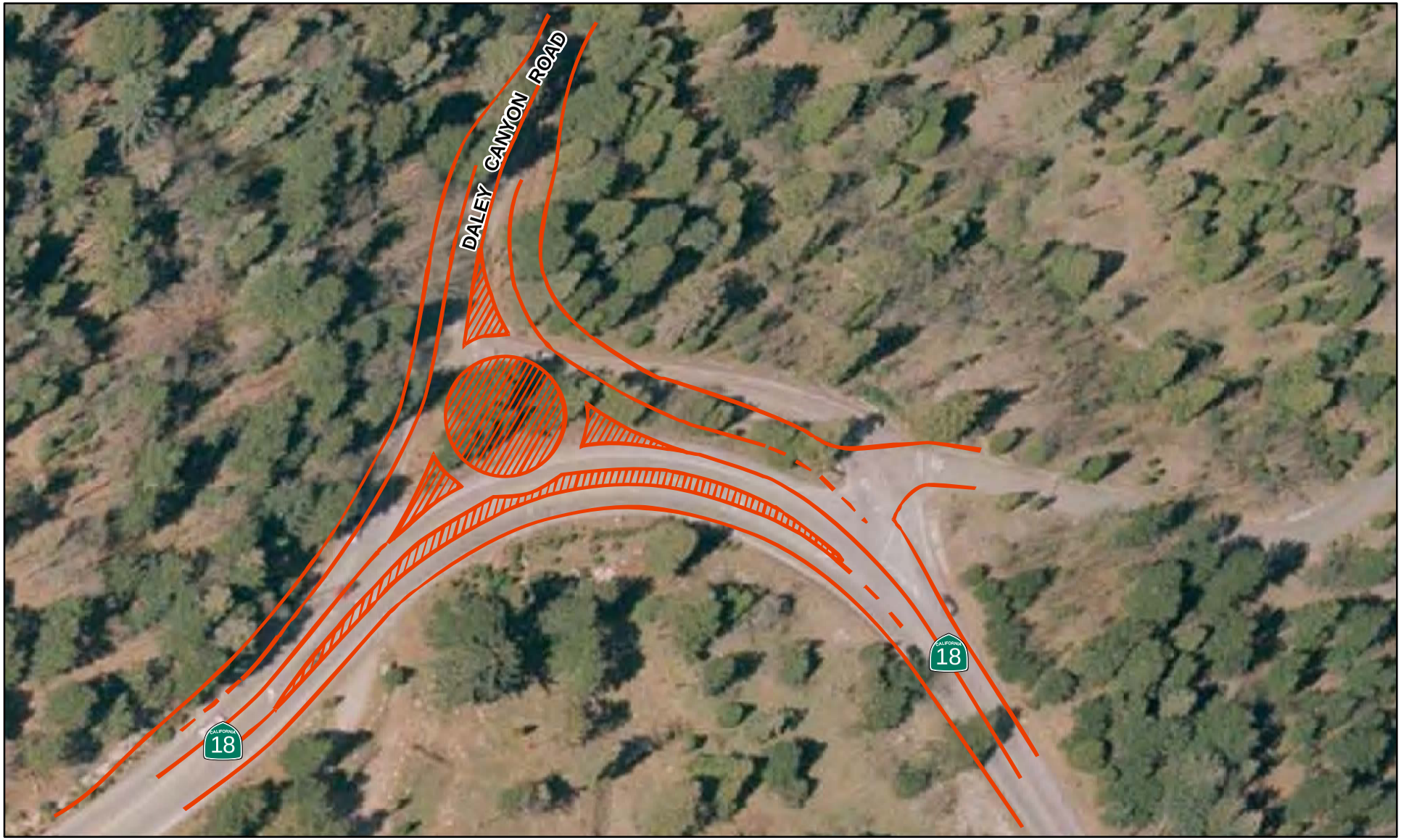

LSA

N

0 50 100

FEET

SOURCE: AirPhoto USA, 2007.

I:\CTW430\Reports\Traffic\SR-18_Daley_roundabout.mxd (07/09/08)

Church of the Woods
Traffic Report

SR-18/Daley Canyon Road Intersection
With Overlay of Roundabout

APPENDIX G

COST ESTIMATES AND PROJECT FAIR SHARE

Table G-1: Preliminary Construction Cost Estimates for CMP TIAs

WIDEN CONVENTIONAL HIGHWAY		
1. Add one outside lane (Work includes earthwork, modification of existing drainage system, construction of AC shoulder section)		
Asphalt Concrete Pavement	$1,000,000	/ mile
2. Add one outside lane each direction (Work includes earthwork, modification of existing drainage system, construction of AC shoulder section)		
Asphalt Concrete Pavement	$2,000,000	/ mile
With median concrete barrier	$2,200,000	/ mile
With median double thrie beam barrier	$2,300,000	/ mile
LOCAL INTERCHANGE IMPROVEMENTS		
1. Reconstruct Existing Interchange		
Realign and widen existing ramps (to 2 lanes)	$750,000	/ each ramp
Construct loop on-ramps (Does not include realigning existng ramp)	$700,000	/ each ramp
Upgrade existing Diamond IC to Partial-Cloverleaf	$6,000,000	
2. Improve Existing Interchange		
Widen ramps (from one to two lanes)	$350,000	/ each ramp
Widen existing OC structure	$110	/ square foot
Signalize ramp intersection	$90,000	/ location
Upgrade exsiting signal at ramp terminal	$75,000	/ intesection
Upgrade exsiting signal at ramp terminal (add lights only)	$25,000	/ each
3. Ramp Metering System	$60,000	/ each location

Table G-1: Preliminary Construction Cost Estimates for CMP TIAs

INTERSECTION IMPROVEMENTS			
1	Signalization of local intersection (with some roadwork)	$500,000	
2.	Updgrade existing intersection signalization	$75,000	
3.	Upgrade existing Traffic Controller/Assembles	$40,000	/ each
4.	Install new signal	$90,000	/ location
5.	Add signal heads	$25,000	/ intersection
6.	Construct left turn lane (240 feet long)	$50,000	/ location
7.	Street widening (12 feet wide - pavement only)	$180,000	/ mile
8.	Curb and gutter (Type A2-8)	$15	/ linear foot
OTHER IMPROVEMENTS			
1.	Construct new OC structure (does not include roadway work)	$100	/ square foot
2.	Construct Retaining Walls (Type 1)	$285	/ linear foot (H=8')
		$360	/ linear foot (H=10')
		$460	/ linear foot (H=12')
		$560	/ linear foot (H=14')
3.	Construct Soundwall	$1,000,000	/ mile (H=12')
4.	Traffic Management Plan	10 % of total consruction cost	

Note: This cost estimate does not include the following items:
1. R/W engineering, appraisal, acquisition and utilities relcation costs.
2. Minor work and supplemental work (10%).
3. Mobilization (10%).
4. Contingencies (25%).
5. Landscaping costs.

Source: San Bernardino Associated Governments

Table G - 2
Year 2009 Off-Site Intersection Improvement Cost Estimates

Intersection: Grass Valley Road/SR-189
Improvements: Install a traffic signal

Items	Lane	Units	Unit Cost	Total Cost
Install new traffic signal		1	$500,000/each	$500,000
Total				$500,000

Intersection: Daley Canyon Road/SR-189
Improvements: Add one eastbound right turn lane and one northbound left-turn lane

Items	Lane	Units	Unit Cost	Total Cost
Construct right turn lane	EBR	1	$50,000/lane	$50,000
Construct left turn lane	NBL	1	$50,000/lane	$50,000
Subtotal				$100,000
Minor Items/Supplemental Work			10%	$10,000
Mobilization			10%	$10,000
Contingencies			25%	$25,000
Total				$145,000

Intersection: Lake Gregory Drive/SR-18
Improvements: Install two traffic signals, add a southbound left turn and coordinate

Items	Lane	Units	Unit Cost	Total Cost
Construct left turn lane	SBL	1	$50,000/lane	$50,000
Minor Items/Supplemental Work			10%	$5,000
Mobilization			10%	$5,000
Contingencies			25%	$12,500
Install new traffic signal		2	$500,000/each	$1,000,000
Total				$1,072,500

Intersection: SR-18/Daley Canyon Road (Including Access Road)
Improvements: Install two traffic signals, add a southbound left turn lane.

Items	Lane	Units	Unit Cost	Total Cost
Construct left turn lane	SBL	1	$50,000/lane	$50,000
Subtotal				$50,000
Minor Items/Supplemental Work			10%	$5,000
Mobilization			10%	$5,000
Contingencies			25%	$12,500
Install new traffic signal		2	$500,000/each	$1,000,000
Total				$1,072,500

Intersection: SR-173/SR-18
Improvements: Install a traffic signal.

Items	Lane	Units	Unit Cost	Total Cost
Install new traffic signal		1	$500,000/each	$500,000
Total				$500,000

TOTAL OFF-SITE INTERSECTION IMPROVEMENT COSTS **$3,290,000**

Table G - 3
Year 2013 Off-Site Intersection Improvement Cost Estimates

Intersection: Grass Valley Road/SR-189
Improvements: Install a traffic signal

Items	Lane	Units	Unit Cost	Total Cost
Install new traffic signal		1	$500,000/each	$500,000
Total				$500,000

Intersection: Daley Canyon Road/SR-189
Improvements: Add one eastbound right turn lane and one northbound left-turn lane

Items	Lane	Units	Unit Cost	Total Cost
Construct right turn lane	EBR	1	$50,000/lane	$50,000
Construct left turn lane	NBL	1	$50,000/lane	$50,000
Subtotal				$100,000
Minor Items/Supplemental Work			10%	$10,000
Mobilization			10%	$10,000
Contingencies			25%	$25,000
Total				$145,000

Intersection: Lake Gregory Drive/SR-18
Improvements: Install two traffic signals, add a southbound left turn and coordinate

Items	Lane	Units	Unit Cost	Total Cost
Construct left turn lane	SBL	1	$50,000/lane	$50,000
Minor Items/Supplemental Work			10%	$5,000
Mobilization			10%	$5,000
Contingencies			25%	$12,500
Install new traffic signal		2	$500,000/each	$1,000,000
Total				$1,072,500

Intersection: Bear Springs Road/SR-18
Improvements: Install a traffic signal

Items	Lane	Units	Unit Cost	Total Cost
Install new traffic signal		1	$500,000/each	$500,000
Total				$500,000

Table G - 3
Year 2013 Off-Site Intersection Improvement Cost Estimates

Intersection: Project Access/SR-18
Improvements: Install a traffic signal

Items	Lane	Units	Unit Cost	Total Cost
Install new traffic signal		1	$500,000/each	$500,000
Total				$500,000

Intersection: SR-18/Daley Canyon Road (Including Access Road)
Improvements: Install two traffic signals, add a southbound left turn lane.

Items	Lane	Units	Unit Cost	Total Cost
Construct left turn lane	SBL	1	$50,000/lane	$50,000
Subtotal				$50,000
Minor Items/Supplemental Work			10%	$5,000
Mobilization			10%	$5,000
Contingencies			25%	$12,500
Install new traffic signal		2	$500,000/each	$1,000,000
Total				$1,072,500

Intersection: SR-173/SR-18
Improvements: Install a traffic signal.

Items	Lane	Units	Unit Cost	Total Cost
Install new traffic signal		1	$500,000/each	$500,000
Total				$500,000

TOTAL OFF-SITE INTERSECTION IMPROVEMENT COSTS **$4,290,000**

Table G-4
Year 2030 Off-Site Intersection Improvement Cost Estimates

Intersection: North Road/SR-189
Improvements: Add one southbound right-turn lane and a westbound right turn lane.

Items	Lane	Units	Unit Cost	Total Cost
Construct right turn lane	SBR	1	$50,000/lane	$50,000
Construct right turn lane	WBR	1	$50,000/lane	$50,000
Subtotal				$100,000
Minor Items/Supplemental Work			10%	$10,000
Mobilization			10%	$10,000
Contingencies			25%	$25,000
Total				$145,000

Intersection: Grass Valley Road/SR-189
Improvements: Install a traffic signal. Add a southbound right turn lane.

Items	Lane	Units	Unit Cost	Total Cost
Construct right turn lane	SBR	1	$50,000/lane	$50,000
Subtotal				$50,000
Minor Items/Supplemental Work			10%	$5,000
Mobilization			10%	$5,000
Contingencies			25%	$12,500
Install new traffic signal		1	$500,000/each	$500,000
Total				$572,500

Intersection: Daley Canyon Road/SR-189
Improvements: Install a traffic signal. Add one eastbound right-turn lane and a northbound le

Items	Lane	Units	Unit Cost	Total Cost
Construct right turn lane	EBR	1	$50,000/lane	$50,000
Construct left turn lane	NBL	1	$50,000/lane	$50,000
Subtotal				$100,000
Minor Items/Supplemental Work			10%	$10,000
Mobilization			10%	$10,000
Contingencies			25%	$25,000
Install new traffic signal		1	$500,000/each	$500,000
Total				$645,000

Intersection: North Bay Road/SR-189
Improvements: Install a traffic signal

Items	Lane	Units	Unit Cost	Total Cost
Install new traffic signal		1	$500,000/each	$500,000
Total				$500,000

Table G-4
Year 2030 Off-Site Intersection Improvement Cost Estimates

Intersection: Lake Gregory Drive/SR-18
Improvements: Install two traffic signals (at SR-18 and SR-189) and coordinate.

Items	Lane	Units	Unit Cost	Total Cost
Construct left turn lane	SBL	1	$50,000/lane	$50,000
Minor Items/Supplemental Work			10%	$5,000
Mobilization			10%	$5,000
Contingencies			25%	$12,500
Install new traffic signal		2	$500,000/each	$1,000,000
Total				$1,072,500

Intersection: Bear Springs Road/SR-18
Improvements: Install a traffic signal.

Items	Lane	Units	Unit Cost	Total Cost
Install new traffic signal		1	$500,000/each	$500,000
Total				$500,000

Intersection: Daley Canyon Road/SR-18
Improvements: Install two traffic signals, add a southbound left turn lane.

Items	Lane	Units	Unit Cost	Total Cost
Construct left turn lane	SBL	1	$50,000/lane	$50,000
Subtotal				$50,000
Minor Items/Supplemental Work			10%	$5,000
Mobilization			10%	$5,000
Contingencies			25%	$12,500
Install new traffic signal		2	$500,000/each	$1,000,000
Total				$1,072,500

Intersection: SR-173/SR-18
Improvements: Install a traffic signal.

Items	Lane	Units	Unit Cost	Total Cost
Install new traffic signal		1	$500,000/each	$500,000
Total				$500,000

Intersection:
Improvements: TWLTL on SR-189 between Grass Valley Road and Daley Canyon Road.

Items	Lane	Miles	Unit Cost	Total Cost
Provide TWLTL		0.3	$180,000/mi	$54,000
Total				$54,000

TOTAL OFF-SITE INTERSECTION IMPROVEMENT COSTS $5,061,500

APPENDIX H:

ADDENDUM TO THE TRAFFIC IMPACT ANALYSIS – ALTERNATIVE MITIGATION ANALYSIS

This addendum has been prepared to explore alternative circulation improvements, other than the installation of traffic signals, at study area intersections forecast to operate at unsatisfactory levels of service under opening year (2009) and forecast year (2030) conditions. Although the traffic impact analysis determined that the installation of traffic signals would ensure satisfactory traffic operations at study area intersections, this alternative analysis has been performed to provide the County of San Bernardino and Caltrans with other circulation improvement options at locations where installation of traffic signals may not be the desired solution. Alternative circulation improvements include lane additions, conversion of two-way stop controls to all-way stop controls, and implementation of roundabouts.

It is important to note that the alternative circulation improvements may not be feasible due to right-of-way constraints, physical constraints (such as the limited space available on mountain edges), queuing of vehicles, and the natural terrain of the study area. Furthermore, LSA's past experience with Caltrans indicates that the conversion of two-way stop controlled intersections to all-way stop controlled intersections on State Highways is discouraged.

The analysis of alternative circulation improvements is discussed below. In addition, the circulation improvements discussed in the traffic impact analysis (TIA) for both opening year and forecast year are also shown for comparison purposes.

OPENING YEAR (2009) INTERSECTION IMPROVEMENTS

Under opening year (2009) conditions, six intersections are forecast to operate at unsatisfactory levels of service (LOS). The following improvements are presented to meet the County's satisfactory LOS standards:

Grass Valley Road/State Route 189 (SR-189)

TIA Improvements: Install a traffic signal.

Alternative Improvements: Convert the existing two-way stop control to an all-way stop control. Add a dedicated southbound right-turn lane.

Daley Canyon Road/SR-189

TIA Improvements: Add an eastbound right-turn lane and a northbound left-turn lane.

Alternative Improvements: The improvements identified in the TIA are adequate since the installation of a traffic signal is not required to ensure satisfactory traffic operations. Hence, no alternative mitigation measures are recommended.

Lake Gregory Drive/State Route 18 (SR-18)

TIA Improvements: Install traffic signals on Lake Gregory Drive at SR-18 and SR-189 and coordinate the signals. Add a southbound left-turn lane at SR-189/Lake Gregory Drive.

Alternative Improvement 1: Implement the roundabout concept. Conceptual plans for the roundabout have been provided by County staff and are provided in Appendix F. These conceptual plans are also included in the "*Update to Technical Memorandum Refinement of Traffic Data and Initial Concept Plan"* prepared by DKS Associates in June 2006 for the Royal Rangers Adventure Camp and Conference Center.

Alternative Improvement 2: Implement the grade separation concept. Conceptual plans for the grade separation have been provided by County staff and are provided in Appendix F. These conceptual plans are also included in the "Update to Technical Memorandum Refinement of Traffic Data and Initial Concept Plan" prepared by DKS Associates in June 2006 for the Royal Rangers Adventure Camp and Conference Center.

Daley Canyon Road/SR-18 (including Daley Canyon Road/Daley Canyon Access Road and Daley Canyon Access Road/SR-18)

TIA Improvements: Install traffic signals at Daley Canyon Road/SR-18 and Daley Canyon Access Road/SR-18; add a southbound left-turn lane at Daley Canyon Road/Daley Canyon Access Road.

Alternative Improvement 1: Implement the roundabout concept. Conceptual plans for the roundabout have been provided by County staff and are provided in Appendix F. These conceptual plans are also included in the "*Update to Technical Memorandum Refinement of Traffic Data and Initial Concept Plan"* prepared by DKS Associates in June 2006 for the Royal Rangers Adventure Camp and Conference Center.

Alternative Improvement 2: Implement the grade separation concept. Conceptual plans for the grade separation have been provided by County staff and are provided in Appendix F. These conceptual plans are also included in the "Update to Technical Memorandum Refinement of Traffic Data and Initial Concept Plan" prepared by DKS Associates in June 2006 for the Royal Rangers Adventure Camp and Conference Center.

SR-173/SR-18

TIA Improvements: Install a traffic signal.

Alternative Improvements: Convert the existing two-way stop control to all-way stop control.

Figure H-1 illustrates the intersection geometrics resulting from the implementation of alternative improvements under opening year (2009) conditions. Table H-1 summarizes the levels of service for opening year (2009) with the implementation of the alternative improvements. Level of service

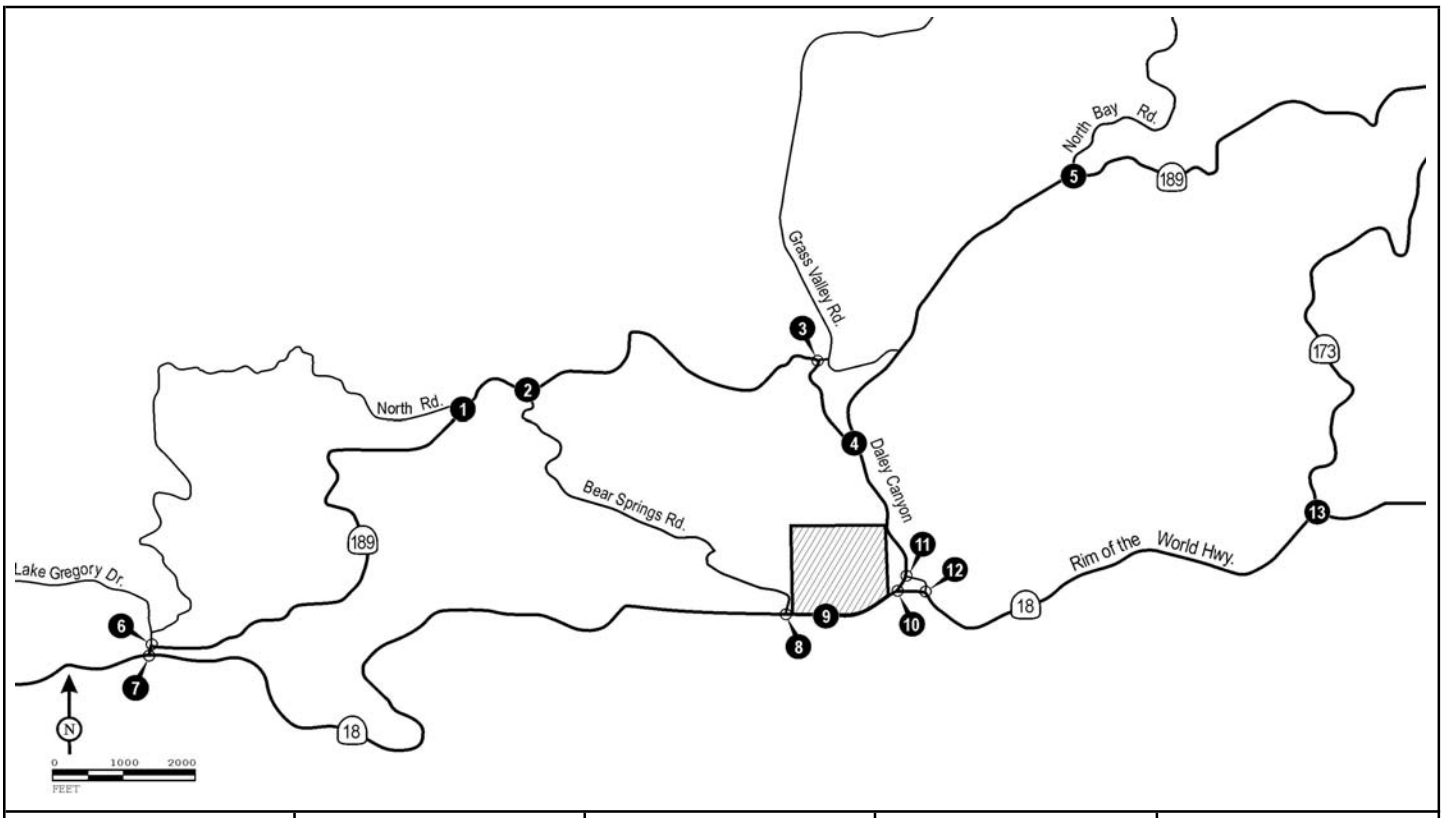

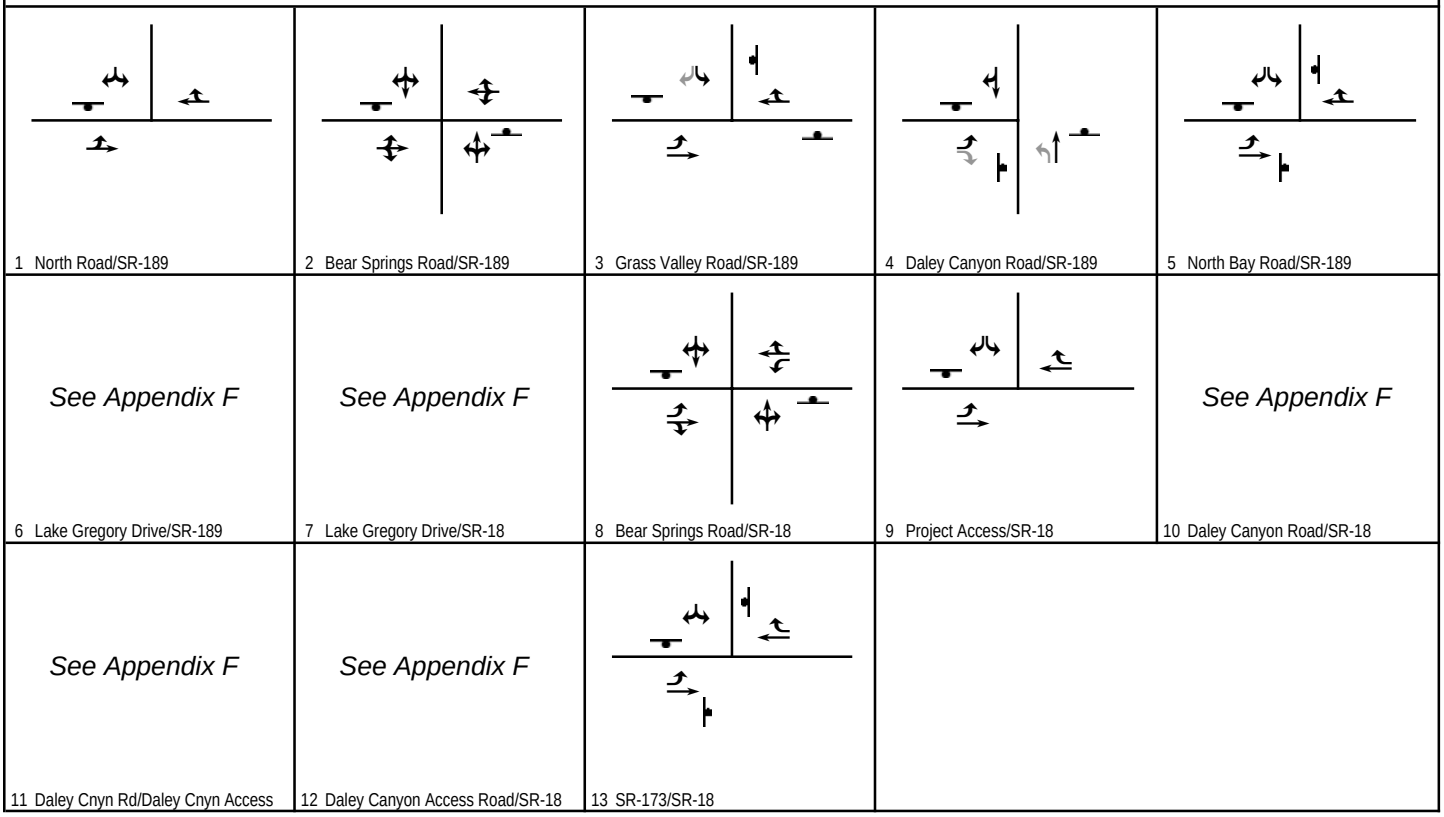

LSA

FIGURE H-1

Legend

Signal

Stop Sign

Existing Turn Lane

Added Turn Lane

Church of the Woods

Intersection Geometrics and Stop Control

Year 2009 With Alternative Mitigations

R:\CTW430\July 2008\g-30_h01_geometrics wp 2009_no signal improve (7/7/2008)

Table H-1 -Opening Year (2009) With Project with Alternative Improvements
Intersection Levels of Service

	Saturday Peak Hour								
	Year 2009 With Project No alt mitigations					Year 2009 With Project with Alternative alt mitigation			
Intersection	Control	V/C	Delay (sec.)	LOS		New Control	V/C	Delay (sec.)	LOS
1 . North Road/SR-189	TWSC	-	21.2	C		TWSC	-	21.2	C
2 . Bear Springs Road/SR-189	TWSC	-	18.2	C		TWSC	-	18.2	C
3 . Grass Valley Road/SR-189	TWSC	-	>100	F	*	AWSC	0.88	23.7	C
4 . Daley Canyon Road/SR-189	AWSC	1.17	86.1	F	*	AWSC	0.75	23.0	C
5 . North Bay Road/SR-189	AWSC	0.68	19.4	C		AWSC	0.68	19.4	C
6 . Lake Gregory Drive/SR-189	TWSC	-	20.0	C				*See Appendix H-1*	
7 . Lake Gregory Drive/SR-18	TWSC	-	41.6	E	*			*See Appendix H-1*	
8 . Bear Springs Road/SR-18	TWSC	-	31.3	D		TWSC	-	31.3	D
9 . Project Access/SR-18	TWSC	-	16.9	C		TWSC	-	16.9	C
10 . Daley Canyon Road/SR-18	TWSC	-	18.9	C				*See Appendix H-1*	
11 . Daley Cnyn Rd/Daley Cnyn Access	TWSC	-	12.4	B				*See Appendix H-1*	
12 . Daley Canyon Access Road/SR-18	TWSC	-	41.4	E	*			*See Appendix H-1*	
13 . SR-173/SR-18	TWSC	-	>100	F	*	AWSC	0.64	15.9	C

	Sunday Peak Hour								
	Year 2009 With Project No alt mitigations					Year 2009 With Project with Alternative alt mitigation			
Intersection	Control	V/C	Delay (sec.)	LOS		New Control	V/C	Delay (sec.)	LOS
1 . North Road/SR-189	TWSC	-	13.0	B		TWSC	-	13.0	B
2 . Bear Springs Road/SR-189	TWSC	-	14.0	B		TWSC	-	14.0	B
3 . Grass Valley Road/SR-189	TWSC	-	36.4	E	*	AWSC	0.69	14.9	B
4 . Daley Canyon Road/SR-189	AWSC	0.83	24.9	C		AWSC	0.72	16.8	C
5 . North Bay Road/SR-189	AWSC	0.57	15.0	B		AWSC	0.57	15.0	B
6 . Lake Gregory Drive/SR-189	TWSC	-	25.0	C				*See Appendix H-1*	
7 . Lake Gregory Drive/SR-18	TWSC	-	17.6	C				*See Appendix H-1*	
8 . Bear Springs Road/SR-18	TWSC	-	30.3	D		TWSC	-	30.3	D
9 . Project Access/SR-18	TWSC	-	19.0	C		TWSC	-	19.0	B
10 . Daley Canyon Road/SR-18	TWSC	-	36.0	E	*			*See Appendix H-1*	
11 . Daley Cnyn Rd/Daley Cnyn Access	TWSC	-	13.2	B				*See Appendix H-1*	
12 . Daley Canyon Access Road/SR-18	TWSC	-	44.2	E	*			*See Appendix H-1*	
13 . SR-173/SR-18	TWSC	-	20.6	C		AWSC	0.55	12.5	B

***** Exceeds LOS standard. Intersections with a calculated V/C of greater than 1.0 are considered to be LOS F, per CMP TIA criteria.

Notes:

V/C = Volume/capacity ratio
LOS = Level of Service
AWSC = All-Way Stop Control
TWSC = Two-Way Stop Control
For TWSC intersections, reported delay is for worst-case approach.

worksheets are included in Appendix I. As shown in Table H-1, all study area intersections are forecast to operate at satisfactory levels of service with the implementation of alternative improvements. All intersections would operate at a level of service D or better. It should be noted, however, that many of the alternative improvements may not be economically or physically feasible.

YEAR 2013 INTERSECTION IMPROVEMENTS

Under year 2013 conditions, nine intersections are forecast to operate at unsatisfactory LOS. The following improvements are presented to meet the County's satisfactory LOS standards:

Grass Valley Road/SR-189

TIA Improvements: Install a traffic signal.

Alternative Improvements: Convert the existing two-way stop control to an all-way stop control. Add a dedicated southbound right-turn lane.

Daley Canyon Road/SR-189

TIA Improvements: Add an eastbound right-turn lane and a northbound left-turn lane.

Alternative Improvements: The improvements identified in the TIA are adequate since the installation of a traffic signal is not required to ensure satisfactory traffic operations. Hence, no alternative mitigation measures are recommended.

Lake Gregory Drive/SR-18

TIA Improvements: Install traffic signals on Lake Gregory Drive at SR-18 and SR-189 and coordinate the signals. Add a southbound left-turn lane at SR-189/Lake Gregory Drive.

Alternative Improvement 1: Implement the roundabout concept. Conceptual plans for the roundabout have been provided by County staff and are provided in Appendix F. These conceptual plans are also included in the "*Update to Technical Memorandum Refinement of Traffic Data and Initial Concept Plan*" prepared by DKS Associates in June 2006 for the Royal Rangers Adventure Camp and Conference Center.

Alternative Improvement 2: Implement the grade separation concept. Conceptual plans for the grade separation have been provided by County staff and are provided in Appendix F. These conceptual plans are also included in the "*Update to Technical Memorandum Refinement of Traffic Data and Initial Concept Plan*" prepared by DKS Associates in June 2006 for the Royal Rangers Adventure Camp and Conference Center.

Bear Springs Road/SR-18

TIA Improvements: Install a traffic signal.

Alternative Improvements: Prohibit northbound and southbound left-turn movements.

Project Access/SR-18

TIA Improvements: Install a traffic signal.

Alternative Improvements: Due to high forecast volumes at this location, no alternative mitigation measures are recommended at this location, other than those already identified in TIA improvements.

Daley Canyon Road/SR-18 (including Daley Canyon Road/Daley Canyon Access Road and Daley Canyon Access Road/SR-18)

TIA Improvements: Install traffic signals at Daley Canyon Road/SR-18 and Daley Canyon Access Road/SR-18; add a southbound left-turn lane at Daley Canyon Road/Daley Canyon Access Road.

Alternative Improvement 1: Implement the roundabout concept. Conceptual plans for the roundabout have been provided by County staff and are provided in Appendix F. These conceptual plans are also included in the "*Update to Technical Memorandum Refinement of Traffic Data and Initial Concept Plan"* prepared by DKS Associates in June 2006 for the Royal Rangers Adventure Camp and Conference Center.

Alternative Improvement 2: Implement the grade separation concept. Conceptual plans for the grade separation have been provided by County staff and are provided in Appendix F. These conceptual plans are also included in the "*Update to Technical Memorandum Refinement of Traffic Data and Initial Concept Plan"* prepared by DKS Associates in June 2006 for the Royal Rangers Adventure Camp and Conference Center.

SR-173/SR-18

TIA Improvements: Install a traffic signal.

Alternative Improvements: Convert the existing two-way stop control to all-way stop control.

Figure H-2 illustrates the intersection geometrics resulting from the implementation of alternative improvements under opening year (2013) conditions. Table H-2 summarizes the levels of service for opening year (2013) with the implementation of the alternative improvements. Level of service worksheets are included in Appendix I. As shown in Table H-2, all study area intersections are forecast to operate at satisfactory levels of service with the implementation of alternative improvements. All intersections would operate at a level of service D or better. It should be noted, however, that many of the alternative improvements may not be economically or physically feasible.

YEAR 2030 INTERSECTION IMPROVEMENTS

Under year 2030 with the project conditions, ten study area intersections are forecast to operate at unsatisfactory level of service conditions. The following improvements are recommended in order to meet the County's LOS standards:

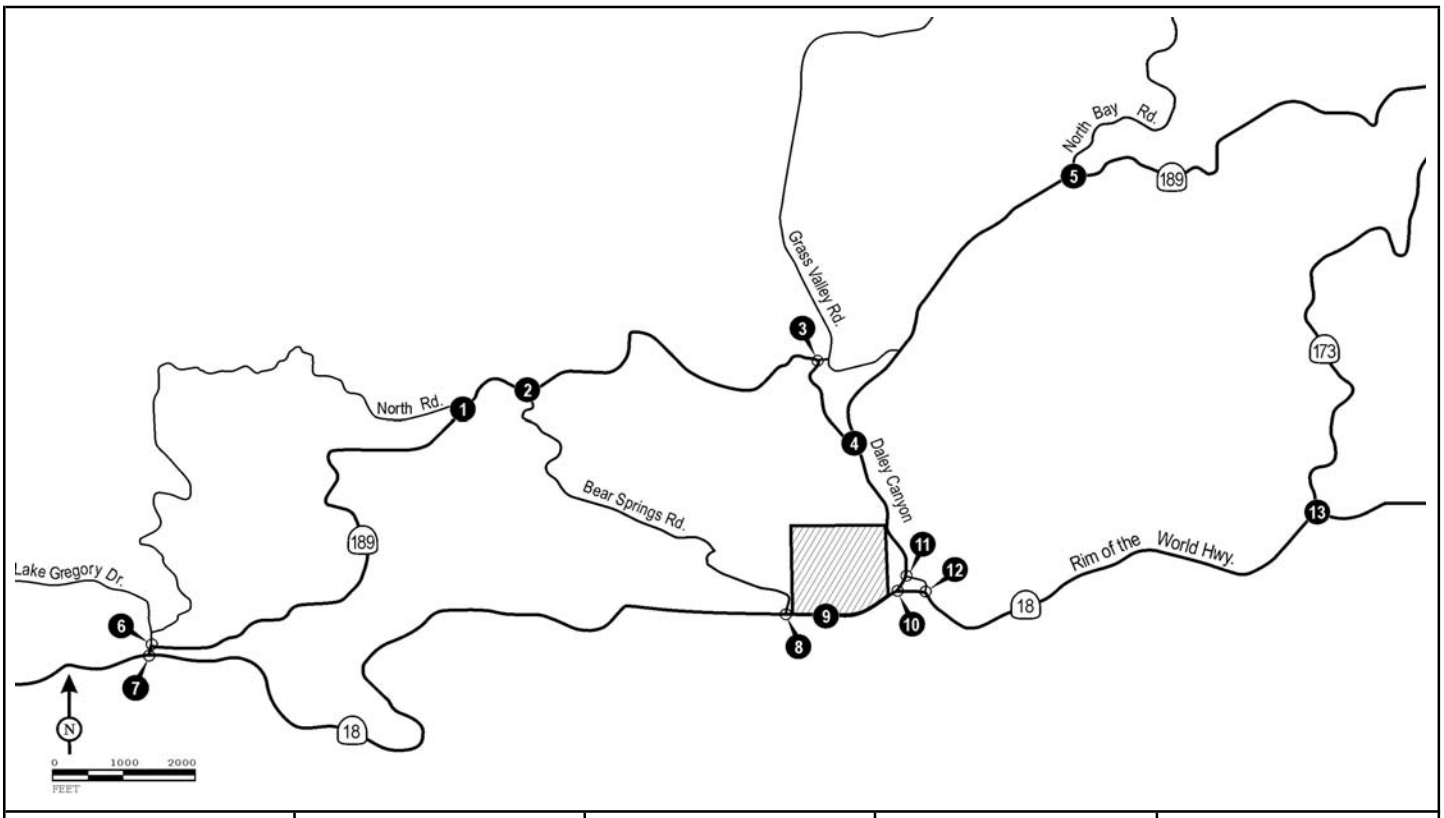

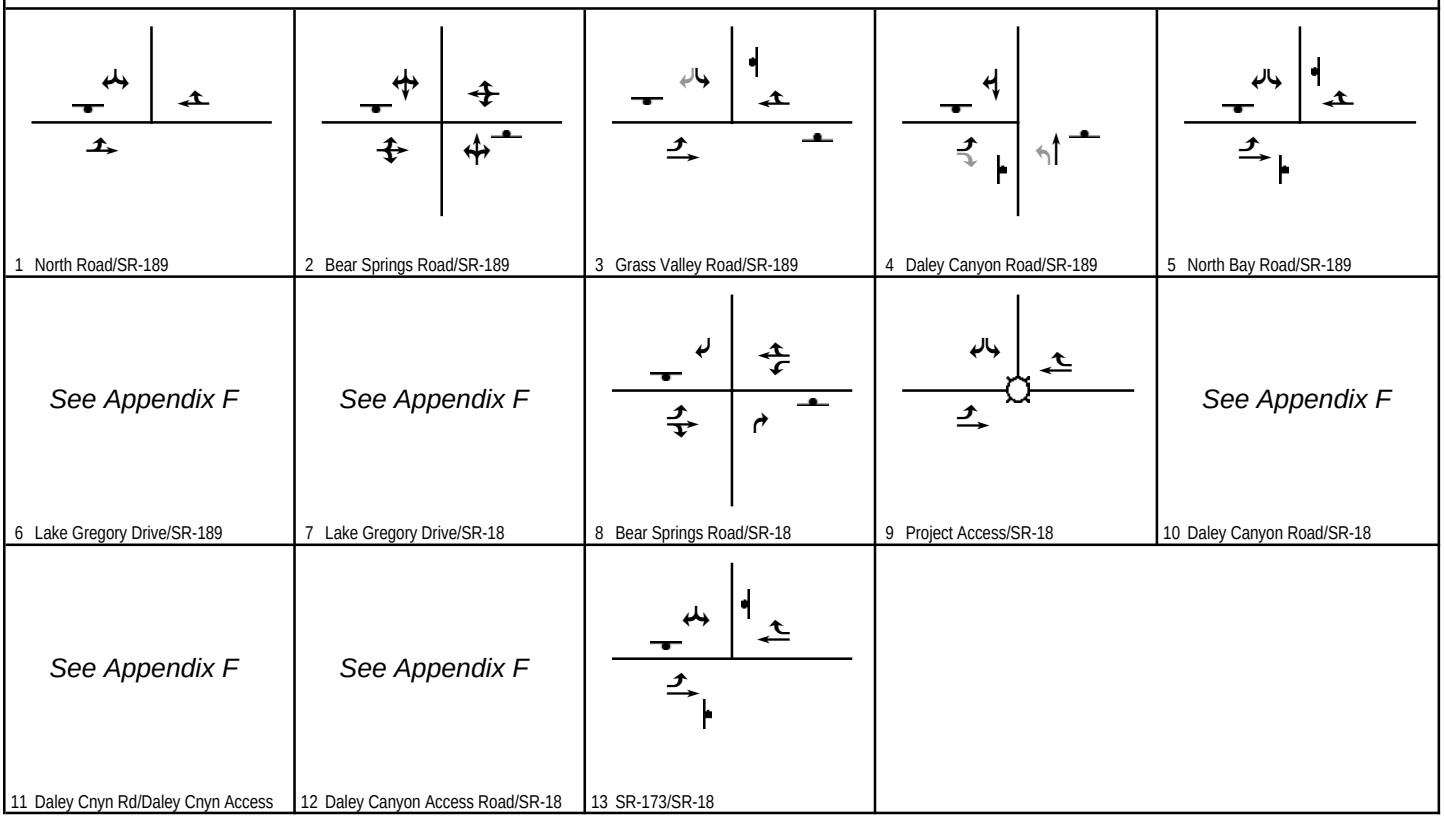

LSA

FIGURE H-2

Legend

Signal
Stop Sign
Existing Turn Lane
Added Turn Lane

Church of the Woods

Intersection Geometrics and Stop Control
Year 2013 With Alternative Mitigations

R:\CTW430\July 2008\g-30_h02_geometrics wp 2013_no signal improve (7/7/2008)

Table H-2 -Year 2013 With Project with Alternative Improvements
Intersection Levels of Service

	Saturday Peak Hour								
	Year 2013 With Project No mitigations					Year 2013 With Project with Alternative mitigation			
Intersection	Control	V/C	Delay (sec.)	LOS		New Control	V/C	Delay (sec.)	LOS
1 . North Road/SR-189	TWSC	-	26.0	D		TWSC	-	26.0	D
2 . Bear Springs Road/SR-189	TWSC	-	20.2	C		TWSC	-	20.2	C
3 . Grass Valley Road/SR-189	TWSC	-	>100	F	*	AWSC	0.96	29.6	D
4 . Daley Canyon Road/SR-189	AWSC	1.24	>100	F	*	AWSC	0.84	28.0	D
5 . North Bay Road/SR-189	AWSC	0.75	22.9	C		AWSC	0.75	22.9	C
6 . Lake Gregory Drive/SR-189	TWSC	-	21.9	C			*See Appendix H-1*		
7 . Lake Gregory Drive/SR-18	TWSC	-	53.3	F	*		*See Appendix H-1*		
8 . Bear Springs Road/SR-18	TWSC	-	36.7	E	*	TWSC	-	17.7	C
9 . Project Access/SR-18	TWSC	-	17.8	C		Signal	0.65	14.8	B
10 . Daley Canyon Road/SR-18	TWSC	-	21.8	C			*See Appendix H-1*		
11 . Daley Cnyn Rd/Daley Cnyn Access	TWSC	-	13.2	B			*See Appendix H-1*		
12 . Daley Canyon Access Road/SR-18	TWSC	-	56.4	F	*		*See Appendix H-1*		
13 . SR-173/SR-18	TWSC	-	>100	F	*	AWSC	0.68	18.1	C

	Sunday Peak Hour								
	Year 2013 With Project No mitigations					Year 2013 With Project with Alternative mitigation			
Intersection	Control	V/C	Delay (sec.)	LOS		New Control	V/C	Delay (sec.)	LOS
1 . North Road/SR-189	TWSC	-	14.3	B		TWSC	-	14.3	B
2 . Bear Springs Road/SR-189	TWSC	-	15.8	C		TWSC	-	15.8	C
3 . Grass Valley Road/SR-189	TWSC	-	75.8	F	*	AWSC	0.83	20.0	B
4 . Daley Canyon Road/SR-189	AWSC	1.04	68.5	F	*	AWSC	0.94	28.8	D
5 . North Bay Road/SR-189	AWSC	0.71	20.2	C		AWSC	0.71	20.2	C
6 . Lake Gregory Drive/SR-189	TWSC	-	40.1	E	*		*See Appendix H-1*		
7 . Lake Gregory Drive/SR-18	TWSC	-	21.6	C			*See Appendix H-1*		
8 . Bear Springs Road/SR-18	TWSC	-	93.1	F	*	TWSC	-	26.8	D
9 . Project Access/SR-18	TWSC	-	85.5	F	*	Signal	0.84	22.0	C
10 . Daley Canyon Road/SR-18	TWSC	-	>100	F	*		*See Appendix H-1*		
11 . Daley Cnyn Rd/Daley Cnyn Access	TWSC	-	16.8	C			*See Appendix H-1*		
12 . Daley Canyon Access Road/SR-18	TWSC	-	>100	F	*		*See Appendix H-1*		
13 . SR-173/SR-18	TWSC	-	37.3	E	*	AWSC	0.70	15.8	C

***** Exceeds LOS standard. Intersections with a calculated V/C of greater than 1.0 are considered to be LOS F, per CMP TIA criteria.

Notes:

V/C = Volume/capacity ratio
LOS = Level of Service
AWSC = All-Way Stop Control
TWSC = Two-Way Stop Control
For TWSC intersections, reported delay is for worst-case approach.

North Road/SR-189

TIA Improvements: Add a dedicated southbound right-turn lane and a dedicated westbound right-turn lane. Convert the existing shared southbound left/right-turn lane to a dedicated left-turn lane. If an additional lane is not feasible, then converting the two-way stop control to all-way stop control would result in a satisfactory level of service without additional lanes.

Alternative Improvements: The improvements identified in the TIA are adequate since the installation of a traffic signal is not required to ensure satisfactory traffic operations. Hence, no alternative mitigation measures are recommended.

Grass Valley Road/SR-189

TIA Improvements: Install a traffic signal, add a dedicated southbound right-turn lane, and convert the existing shared southbound left/right-turn lane to a dedicated left-turn lane.

Alternative Improvements: Convert the existing two-way stop control to an all-way stop control. Add two southbound left-turn lanes and restripe the existing shared through/right-turn lane as an exclusive right-turn lane.

Daley Canyon Road/SR-189

TIA Improvements: Install a traffic signal. Add an eastbound right-turn lane. Add a northbound left-turn lane. Convert the existing shared eastbound left/right-turn lane to a dedicated left-turn lane.

Alternative Improvements: Due to high forecast volumes at this location, no alternative mitigation measures are recommended at this location, other than those already identified in TIA improvements.

North Bay Road/SR-189

TIA Improvements: Install a traffic signal.

Alternative Improvements: Add a southbound right-turn lane, an eastbound left-turn lane, and a westbound right-turn lane.

Lake Gregory Drive/SR-18

TIA Improvements: Install traffic signals on Lake Gregory Drive at SR-18 and SR-189 and coordinate the signals. Add a southbound left-turn lane at SR-189/Lake Gregory Drive.

Alternative Improvement 1: Implement the roundabout concept. Conceptual plans for the roundabout have been provided by County staff and are provided in Appendix F. These conceptual plans are also included in the "*Update to Technical Memorandum Refinement of Traffic Data and Initial Concept Plan*" prepared by DKS Associates in June 2006 for the Royal Rangers Adventure Camp and Conference Center.

Alternative Improvement 2: Implement the grade separation concept. Conceptual plans for the grade separation have been provided by County staff and are provided in Appendix F. These conceptual plans are also included in the "*Update to Technical Memorandum Refinement of Traffic Data and Initial Concept Plan"* prepared by DKS Associates in June 2006 for the Royal Rangers Adventure Camp and Conference Center.

Bear Springs Road/SR-18

TIA Improvements: Install a traffic signal.

Alternative Improvements: Prohibit northbound and southbound left-turn movements.

Project Access/SR-18

TIA Improvements: Install a traffic signal.

Alternative Improvements: Due to high forecast volumes at this location, no alternative mitigation measures are recommended at this location, other than those already identified in TIA improvements.

Daley Canyon Road/SR-18 (including Daley Canyon Road/Daley Canyon Access Road and Daley Canyon Access Road/SR-18)

TIA Improvements: Install traffic signals at Daley Canyon Road/SR-18 and Daley Canyon Access Road/SR-18; add a southbound left-turn lane at Daley Canyon Road/Daley Canyon Access Road.

Alternative Improvement 1: Implement the roundabout concept. Conceptual plans for the roundabout have been provided by County staff and are provided in Appendix F. These conceptual plans are also included in the "*Update to Technical Memorandum Refinement of Traffic Data and Initial Concept Plan"* prepared by DKS Associates in June 2006 for the Royal Rangers Adventure Camp and Conference Center.

Alternative Improvement 2: Implement the grade separation concept. Conceptual plans for the grade separation have been provided by LSA and are provided in Appendix F.

SR-173/SR-18

TIA Improvements: Install a traffic signal.

Alternative Improvements: Convert the existing two-way stop control to an all-way stop control.

Figure H-3 illustrates the intersection geometrics resulting from the implementation of alternative improvements under forecast year (2030). Table H-3 summarizes the levels of service for forecast year (2030) with the implementation of the alternative improvements. Level of service worksheets are included in Appendix I. As shown in Table H-3, all study area intersections are forecast to operate at satisfactory levels of service with the implementation of alternative improvements. All intersections would operate at a level of service D or better.

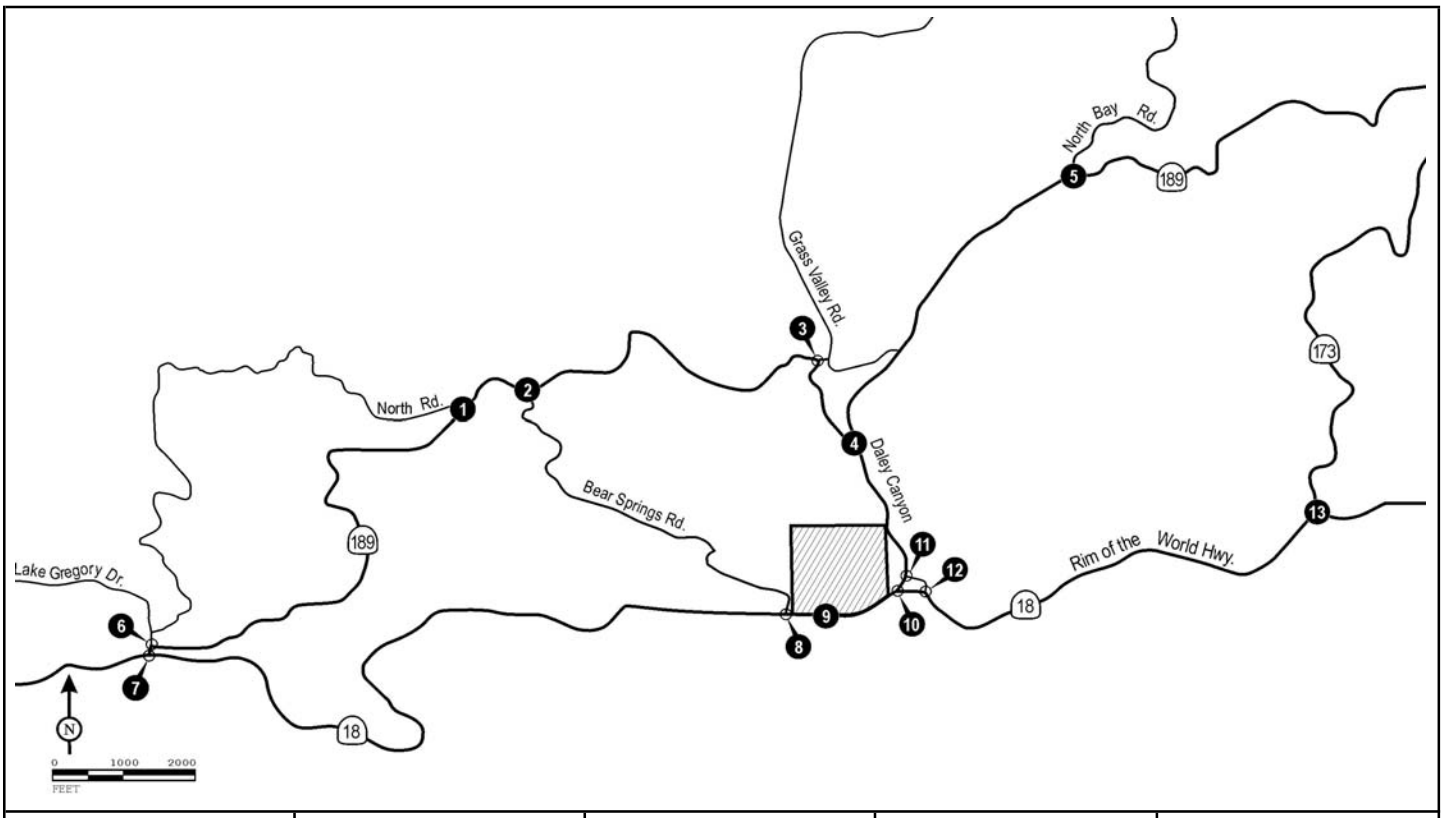

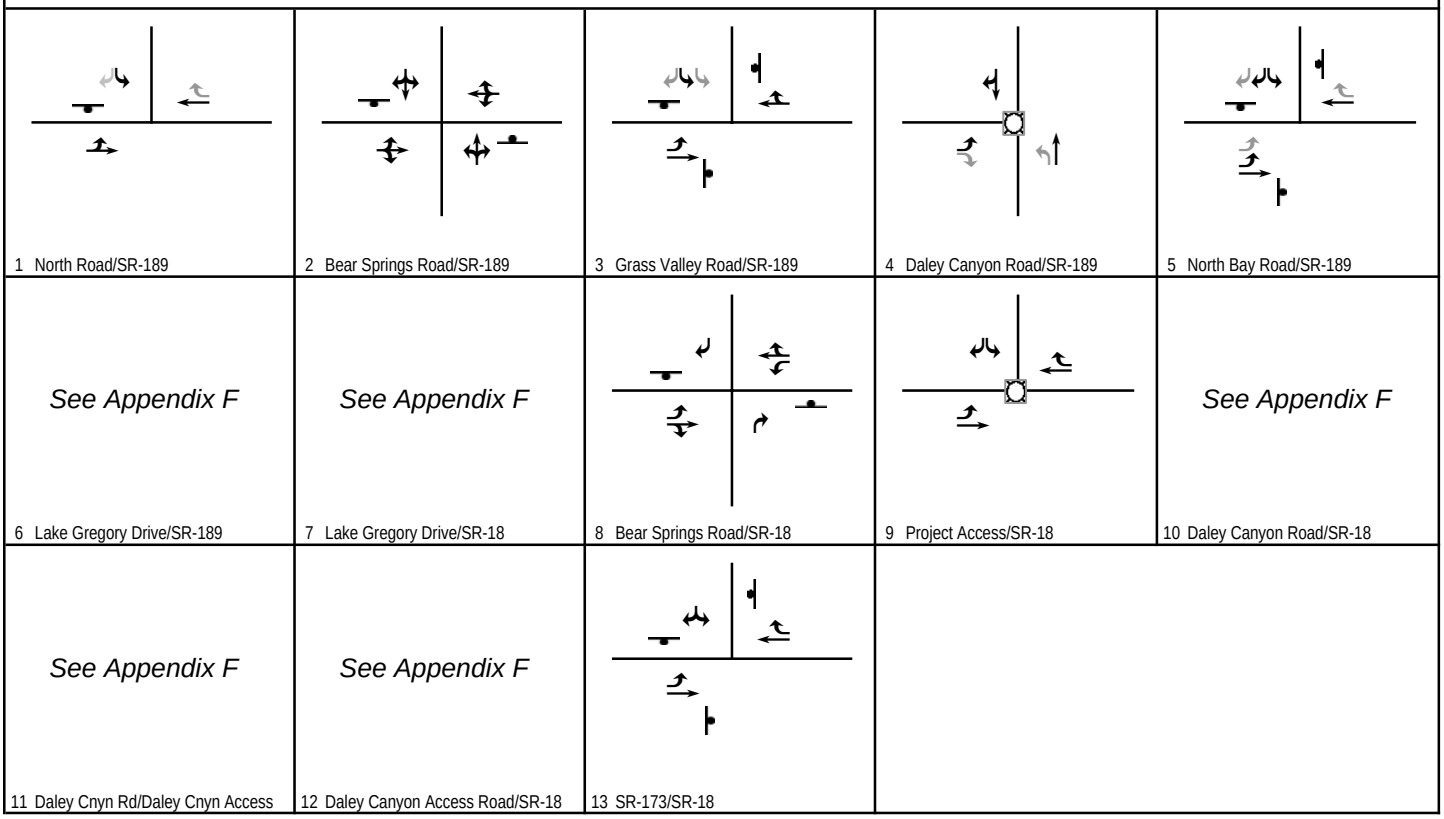

LSA

FIGURE H-3

Legend

Signal

Stop Sign

Existing Turn Lane

Added Turn Lane

Church of the Woods

Intersection Geometrics and Stop Control

Year 2030 With Alternative Mitigations

Table H-3 -Forecast Year (2030) With Project with Alternative Improvements
Intersection Levels of Service

	Saturday Peak Hour								
	Year 2030 With Project No mitigations					Year 2030 With Project with Alternative mitigation			
Intersection	Control	V/C	Delay (sec.)	LOS		New Control	V/C	Delay (sec.)	LOS
1 . North Road/SR-189	TWSC	-	54.5	F	*	TWSC	-	22.8	C
2 . Bear Springs Road/SR-189	TWSC	-	30.8	D		TWSC	-	30.8	D
3 . Grass Valley Road/SR-189	TWSC	-	>100	F	*	AWSC	0.77	21.2	C
4 . Daley Canyon Road/SR-189	AWSC	1.79	>100	F	*	Signal	0.78	20.6	C
5 . North Bay Road/SR-189	AWSC	1.16	63.4	F	*	AWSC	0.99	31.2	D
6 . Lake Gregory Drive/SR-189	TWSC	-	24.4	C				*See Appendix H-1*	
7 . Lake Gregory Drive/SR-18	TWSC	-	>100	F	*			*See Appendix H-1*	
8 . Bear Springs Road/SR-18	TWSC	-	>100	F	*	TWSC	-	24.7	C
9 . Project Access/SR-18	TWSC	-	22.9	C		Signal	0.70	12.9	B
10 . Daley Canyon Road/SR-18	TWSC	-	70.2	F	*			*See Appendix H-1*	
11 . Daley Cnyn Rd/Daley Cnyn Access	TWSC	-	21.5	C				*See Appendix H-1*	
12 . Daley Canyon Access Road/SR-18	TWSC	-	>100	F	*			*See Appendix H-1*	
13 . SR-173/SR-18	TWSC	-	>100	F	*	AWSC	0.93	31.3	D

	Sunday Peak Hour								
	Year 2030 With Project No mitigations					Year 2030 With Project with Alternative mitigation			
Intersection	Control	V/C	Delay (sec.)	LOS		New Control	V/C	Delay (sec.)	LOS
1 . North Road/SR-189	TWSC	-	17.6	C		TWSC	-	13.1	B
2 . Bear Springs Road/SR-189	TWSC	-	20.2	C		TWSC	-	20.2	C
3 . Grass Valley Road/SR-189	TWSC	-	>100	F	*	AWSC	0.6	15.0	B
4 . Daley Canyon Road/SR-189	AWSC	1.34	>100	F	*	Signal	0.7	15.2	C
5 . North Bay Road/SR-189	AWSC	0.88	32.0	D		AWSC	0.7	17.8	C
6 . Lake Gregory Drive/SR-189	TWSC	-	25.9	D				*See Appendix H-1*	
7 . Lake Gregory Drive/SR-18	TWSC	-	25.8	D				*See Appendix H-1*	
8 . Bear Springs Road/SR-18	TWSC	-	41.2	E	*	TWSC	-	21.5	C
9 . Project Access/SR-18	TWSC	-	>100	F	*	Signal	0.8	20.5	C
10 . Daley Canyon Road/SR-18	TWSC	-	>100	F	*			*See Appendix H-1*	
11 . Daley Cnyn Rd/Daley Cnyn Access	TWSC	-	16.7	C				*See Appendix H-1*	
12 . Daley Canyon Access Road/SR-18	TWSC	-	>100	F	*			*See Appendix H-1*	
13 . SR-173/SR-18	TWSC	-	>100	F	*	AWSC	0.9	24.2	C

***** Exceeds LOS standard. Intersections with a calculated V/C of greater than 1.0 are considered to be LOS F, per CMP TIA criteria.

Notes:

V/C = Volume/capacity ratio
LOS = Level of Service
AWSC = All-Way Stop Control
TWSC = Two-Way Stop Control
For TWSC intersections, reported delay is for worst-case approach.

As stated above, alternative improvements may not be feasible due to right-of-way constraints, physical constraints (such as the limited space available on mountain edges), queuing of vehicles, and the natural terrain of the study area. Specifically, the amount of space available at the intersection of Daley Canyon Road/SR-18, and other intersections where lane additions are recommended is insufficient to accommodate the alternative improvements. Furthermore, cut and cover operations would be required on the hillside, which could potentially lead to adverse environmental impacts.

APPENDIX H-1

ALTERNATIVE MITIGATION LEVELS OF SERVICE

OPENING YEAR (2009) WITH PROJECT WITH ALTERNATIVE IMPROVEMENTS CONDITIONS

Church of the Woods
Opening Year (2009) With Project Traffic Conditions
Saturday Peak Hour With Alternative Improvements

Level Of Service Computation Report
2000 HCM 4-Way Stop Method (Base Volume Alternative)

Intersection #3 Grass Valley Road/State Route 189

Cycle (sec):	100	Critical Vol./Cap.(X):	0.882
Loss Time (sec):	0 (Y+R=4.0 sec)	Average Delay (sec/veh):	23.7
Optimal Cycle:	0	Level Of Service:	C

Approach:	North Bound			South Bound			East Bound			West Bound		
Movement:	L -	T -	R	L -	T -	R	L -	T -	R	L -	T -	R
Control:	Stop Sign			Stop Sign			Stop Sign			Stop Sign		
Rights:	Include			Include			Include			Include		
Min. Green:	10	10	10	10	10	10	10	10	10	10	10	10
Lanes:	0 0	0 0	0	1 0	0 0	1	1 0	1 0	0	0 0	0 1	0
Volume Module:												
Base Vol:	0	0	0	363	0	250	122	211	0	0	86	190
Growth Adj:	1.00	1.00	1.00	1.00	1.00	1.00	1.00	1.00	1.00	1.00	1.00	1.00
Initial Bse:	0	0	0	363	0	250	122	211	0	0	86	190
User Adj:	1.00	1.00	1.00	1.00	1.00	1.00	1.00	1.00	1.00	1.00	1.00	1.00
PHF Adj:	1.00	1.00	1.00	0.81	0.81	0.81	0.78	0.78	0.78	0.83	0.83	0.83
PHF Volume:	0	0	0	448	0	308	157	272	0	0	103	228
Reduct Vol:	0	0	0	0	0	0	0	0	0	0	0	0
Reduced Vol:	0	0	0	448	0	308	157	272	0	0	103	228
PCE Adj:	1.00	1.00	1.00	1.00	1.00	1.00	1.00	1.00	1.00	1.00	1.00	1.00
MLF Adj:	1.00	1.00	1.00	1.00	1.00	1.00	1.00	1.00	1.00	1.00	1.00	1.00
FinalVolume:	0	0	0	448	0	308	157	272	0	0	103	228
Saturation Flow Module:												
Adjustment:	1.00	1.00	1.00	1.00	1.00	1.00	1.00	1.00	1.00	1.00	1.00	1.00
Lanes:	0.00	0.00	0.00	1.00	0.00	1.00	1.00	1.00	0.00	0.00	0.31	0.69
Final Sat.:	0	0	0	508	0	608	467	501	0	0	173	383
Capacity Analysis Module:												
Vol/Sat:	xxxx	xxxx	xxxx	0.88	xxxx	0.51	0.34	0.54	xxxx	xxxx	0.60	0.60
Crit Moves:				****				****			****	
Delay/Veh:	0.0	0.0	0.0	41.6	0.0	14.3	13.9	17.5	0.0	0.0	18.0	18.0
Delay Adj:	1.00	1.00	1.00	1.00	1.00	1.00	1.00	1.00	1.00	1.00	1.00	1.00
AdjDel/Veh:	0.0	0.0	0.0	41.6	0.0	14.3	13.9	17.5	0.0	0.0	18.0	18.0
LOS by Move:	*	*	*	E	*	B	B	C	*	*	C	C
ApproachDel:	xxxxxx			30.5			16.2			18.0		
Delay Adj:	xxxxx			1.00			1.00			1.00		
ApprAdjDel:	xxxxxx			30.5			16.2			18.0		
LOS by Appr:	*			D			C			C		
AllWayAvgQ:	0.0	0.0	0.0	4.5	0.0	1.0	0.5	1.1	0.0	1.3	1.3	1.3

Note: Queue reported is the number of cars per lane.

Church of the Woods
Opening Year (2009) With Project Traffic Conditions
Saturday Peak Hour With Alternative Improvements

Level Of Service Computation Report
2000 HCM 4-Way Stop Method (Base Volume Alternative)

Intersection #4 Daley Canyon Road/State Route 189

Cycle (sec):	100	Critical Vol./Cap.(X):	0.752
Loss Time (sec):	0 (Y+R=4.0 sec)	Average Delay (sec/veh):	23.0
Optimal Cycle:	0	Level Of Service:	C

Approach:	North Bound				South Bound				East Bound				West Bound			
Movement:	L	- T	- R		L	- T	- R		L	- T	- R		L	- T	- R	
Control:	Stop Sign				Stop Sign				Stop Sign				Stop Sign			
Rights:	Include				Include				Include				Include			
Min. Green:	10	10	10		10	10	10		10	10	10		10	10	10	
Lanes:	1 0	1 0	0		0 0	0 1	0		1 0	0 0	1		0 0	0 0	0	
Volume Module:																
Base Vol:	195	348	0		0	260	76		313	0	287		0	0	0	
Growth Adj:	1.00	1.00	1.00		1.00	1.00	1.00		1.00	1.00	1.00		1.00	1.00	1.00	
Initial Bse:	195	348	0		0	260	76		313	0	287		0	0	0	
User Adj:	1.00	1.00	1.00		1.00	1.00	1.00		1.00	1.00	1.00		1.00	1.00	1.00	
PHF Adj:	0.91	0.91	0.91		0.90	0.90	0.90		0.89	0.89	0.89		1.00	1.00	1.00	
PHF Volume:	215	385	0		0	288	84		350	0	321		0	0	0	
Reduct Vol:	0	0	0		0	0	0		0	0	0		0	0	0	
Reduced Vol:	215	385	0		0	288	84		350	0	321		0	0	0	
PCE Adj:	1.00	1.00	1.00		1.00	1.00	1.00		1.00	1.00	1.00		1.00	1.00	1.00	
MLF Adj:	1.00	1.00	1.00		1.00	1.00	1.00		1.00	1.00	1.00		1.00	1.00	1.00	
FinalVolume:	215	385	0		0	288	84		350	0	321		0	0	0	
Saturation Flow Module:																
Adjustment:	1.00	1.00	1.00		1.00	1.00	1.00		1.00	1.00	1.00		1.00	1.00	1.00	
Lanes:	1.00	1.00	0.00		0.00	0.77	0.23		1.00	0.00	1.00		0.00	0.00	0.00	
Final Sat.:	476	511	0		0	412	120		478	0	566		0	0	0	
Capacity Analysis Module:																
Vol/Sat:	0.45	0.75	xxxx		xxxx	0.70	0.70		0.73	xxxx	0.57		xxxx	xxxx	xxxx	
Crit Moves:		****				****			****							
Delay/Veh:	16.1	27.5	0.0		0.0	23.5	23.5		27.5	0.0	16.7		0.0	0.0	0.0	
Delay Adj:	1.00	1.00	1.00		1.00	1.00	1.00		1.00	1.00	1.00		1.00	1.00	1.00	
AdjDel/Veh:	16.1	27.5	0.0		0.0	23.5	23.5		27.5	0.0	16.7		0.0	0.0	0.0	
LOS by Move:	C	D	*		*	C	C		D	*	C		*	*	*	
ApproachDel:		23.4				23.5				22.3				xxxxxx		
Delay Adj:		1.00				1.00				1.00				xxxxx		
ApprAdjDel:		23.4				23.5				22.3				xxxxxx		
LOS by Appr:		C				C				C				*		
AllWayAvgQ:	0.8	2.5	0.0		2.0	2.0	2.0		2.3	0.0	1.2		0.0	0.0	0.0	

Note: Queue reported is the number of cars per lane.

Church of the Woods
Opening Year (2009) With Project Traffic Conditions
Saturday Peak Hour With Alternative Improvements

Level Of Service Computation Report
2000 HCM 4-Way Stop Method (Base Volume Alternative)

Intersection #13 State Route 173/State Route 18

Cycle (sec): 100 Critical Vol./Cap.(X): 0.636
Loss Time (sec): 0 (Y+R=4.0 sec) Average Delay (sec/veh): 15.9
Optimal Cycle: 0 Level Of Service: C

Approach:	North Bound			South Bound			East Bound			West Bound		
Movement:	L - T - R			L - T - R			L - T - R			L - T - R		
Control:	Stop Sign			Stop Sign			Stop Sign			Stop Sign		
Rights:	Include			Include			Include			Include		
Min. Green:	10	10	10	10	10	10	10	10	10	10	10	10
Lanes:	0 0 0	0 0	0	0 0	1! 0	0	1 0	1 0	0	0 0	1 0	1
Volume Module:												
Base Vol:	0	0	0	89	0	154	264	311	0	0	264	94
Growth Adj:	1.00	1.00	1.00	1.00	1.00	1.00	1.00	1.00	1.00	1.00	1.00	1.00
Initial Bse:	0	0	0	89	0	154	264	311	0	0	264	94
User Adj:	1.00	1.00	1.00	1.00	1.00	1.00	1.00	1.00	1.00	1.00	1.00	1.00
PHF Adj:	1.00	1.00	1.00	0.79	0.79	0.79	0.82	0.82	0.82	0.94	0.94	0.94
PHF Volume:	0	0	0	113	0	196	324	382	0	0	281	100
Reduct Vol:	0	0	0	0	0	0	0	0	0	0	0	0
Reduced Vol:	0	0	0	113	0	196	324	382	0	0	281	100
PCE Adj:	1.00	1.00	1.00	1.00	1.00	1.00	1.00	1.00	1.00	1.00	1.00	1.00
MLF Adj:	1.00	1.00	1.00	1.00	1.00	1.00	1.00	1.00	1.00	1.00	1.00	1.00
FinalVolume:	0	0	0	113	0	196	324	382	0	0	281	100
Saturation Flow Module:												
Adjustment:	1.00	1.00	1.00	1.00	1.00	1.00	1.00	1.00	1.00	1.00	1.00	1.00
Lanes:	0.00	0.00	0.00	0.37	0.00	0.63	1.00	1.00	0.00	0.00	1.00	1.00
Final Sat.:	0	0	0	220	0	381	553	600	0	0	553	617
Capacity Analysis Module:												
Vol/Sat:	xxxx	xxxx	xxxx	0.52	xxxx	0.52	0.59	0.64	xxxx	xxxx	0.51	0.16
Crit Moves:				****				****			****	
Delay/Veh:	0.0	0.0	0.0	14.4	0.0	14.4	17.6	18.1	0.0	0.0	15.1	9.4
Delay Adj:	1.00	1.00	1.00	1.00	1.00	1.00	1.00	1.00	1.00	1.00	1.00	1.00
AdjDel/Veh:	0.0	0.0	0.0	14.4	0.0	14.4	17.6	18.1	0.0	0.0	15.1	9.4
LOS by Move:	*	*	*	B	*	B	C	C	*	*	C	A
ApproachDel:	xxxxxx			14.4			17.9			13.6		
Delay Adj:	xxxxx			1.00			1.00			1.00		
ApprAdjDel:	xxxxxx			14.4			17.9			13.6		
LOS by Appr:	*			B			C			B		
AllWayAvgQ:	0.0	0.0	0.0	0.9	0.9	0.9	1.3	1.6	0.0	0.0	0.9	0.2

Note: Queue reported is the number of cars per lane.

Church of the Woods
Opening Year (2008) With Project Traffic Conditions
Sunday Peak Hour With Alternative Improvements

Level Of Service Computation Report
2000 HCM 4-Way Stop Method (Base Volume Alternative)

Intersection #3 Grass Valley Road/State Route 189

Cycle (sec):	100	Critical Vol./Cap.(X):	0.688
Loss Time (sec):	0 (Y+R=4.0 sec)	Average Delay (sec/veh):	14.9
Optimal Cycle:	0	Level Of Service:	B

Approach:	North Bound			South Bound			East Bound			West Bound		
Movement:	L -	T -	R	L -	T -	R	L -	T -	R	L -	T -	R
Control:	Stop Sign			Stop Sign			Stop Sign			Stop Sign		
Rights:	Include			Include			Include			Include		
Min. Green:	10	10	10	10	10	10	10	10	10	10	10	10
Lanes:	0 0	0 0	0	1 0	0 0	1	1 0	1 0	0	0 0	0 1	0
Volume Module:												
Base Vol:	0	0	0	347	0	170	70	160	0	0	54	145
Growth Adj:	1.00	1.00	1.00	1.00	1.00	1.00	1.00	1.00	1.00	1.00	1.00	1.00
Initial Bse:	0	0	0	347	0	170	70	160	0	0	54	145
User Adj:	1.00	1.00	1.00	1.00	1.00	1.00	1.00	1.00	1.00	1.00	1.00	1.00
PHF Adj:	1.00	1.00	1.00	0.90	0.90	0.90	0.91	0.91	0.91	0.83	0.83	0.83
PHF Volume:	0	0	0	386	0	189	77	176	0	0	65	176
Reduct Vol:	0	0	0	0	0	0	0	0	0	0	0	0
Reduced Vol:	0	0	0	386	0	189	77	176	0	0	65	176
PCE Adj:	1.00	1.00	1.00	1.00	1.00	1.00	1.00	1.00	1.00	1.00	1.00	1.00
MLF Adj:	1.00	1.00	1.00	1.00	1.00	1.00	1.00	1.00	1.00	1.00	1.00	1.00
FinalVolume:	0	0	0	386	0	189	77	176	0	0	65	176
Saturation Flow Module:												
Adjustment:	1.00	1.00	1.00	1.00	1.00	1.00	1.00	1.00	1.00	1.00	1.00	1.00
Lanes:	0.00	0.00	0.00	1.00	0.00	1.00	1.00	1.00	0.00	0.00	0.27	0.73
Final Sat.:	0	0	0	560	0	685	503	542	0	0	165	444
Capacity Analysis Module:												
Vol/Sat:	xxxx	xxxx	xxxx	0.69	xxxx	0.28	0.15	0.32	xxxx	xxxx	0.40	0.40
Crit Moves:				****				****				****
Delay/Veh:	0.0	0.0	0.0	21.3	0.0	9.7	10.8	11.9	0.0	0.0	12.2	12.2
Delay Adj:	1.00	1.00	1.00	1.00	1.00	1.00	1.00	1.00	1.00	1.00	1.00	1.00
AdjDel/Veh:	0.0	0.0	0.0	21.3	0.0	9.7	10.8	11.9	0.0	0.0	12.2	12.2
LOS by Move:	*	*	*	C	*	A	B	B	*	*	B	B
ApproachDel:	xxxxxx			17.5			11.6			12.2		
Delay Adj:	xxxxx			1.00			1.00			1.00		
ApprAdjDel:	xxxxxx			17.5			11.6			12.2		
LOS by Appr:	*			C			B			B		
AllWayAvgQ:	0.0	0.0	0.0	1.9	0.0	0.4	0.2	0.4	0.0	0.6	0.6	0.6

Note: Queue reported is the number of cars per lane.

Church of the Woods
Opening Year (2008) With Project Traffic Conditions
Sunday Peak Hour With Alternative Improvements

Level Of Service Computation Report
2000 HCM 4-Way Stop Method (Base Volume Alternative)

Intersection #4 Daley Canyon Road/State Route 189

Cycle (sec):	100	Critical Vol./Cap.(X):	0.717
Loss Time (sec):	0 (Y+R=4.0 sec)	Average Delay (sec/veh):	16.8
Optimal Cycle:	0	Level Of Service:	C

Approach:	North Bound				South Bound				East Bound				West Bound			
Movement:	L	- T	- R		L	- T	- R		L	- T	- R		L	- T	- R	
Control:	Stop Sign				Stop Sign				Stop Sign				Stop Sign			
Rights:	Include				Include				Include				Include			
Min. Green:	10	10	10		10	10	10		10	10	10		10	10	10	
Lanes:	1	0 1	0	0	0	0 0	1	0	1	0 0	0	1	0	0 0	0	0
Volume Module:																
Base Vol:	145	204	0	0	318	40	187	0	303	0	0	0				
Growth Adj:	1.00	1.00	1.00	1.00	1.00	1.00	1.00	1.00	1.00	1.00	1.00	1.00				
Initial Bse:	145	204	0	0	318	40	187	0	303	0	0	0				
User Adj:	1.00	1.00	1.00	1.00	1.00	1.00	1.00	1.00	1.00	1.00	1.00	1.00				
PHF Adj:	0.86	0.86	0.86	0.87	0.87	0.87	0.96	0.96	0.96	1.00	1.00	1.00				
PHF Volume:	169	237	0	0	367	46	195	0	315	0	0	0				
Reduct Vol:	0	0	0	0	0	0	0	0	0	0	0	0				
Reduced Vol:	169	237	0	0	367	46	195	0	315	0	0	0				
PCE Adj:	1.00	1.00	1.00	1.00	1.00	1.00	1.00	1.00	1.00	1.00	1.00	1.00				
MLF Adj:	1.00	1.00	1.00	1.00	1.00	1.00	1.00	1.00	1.00	1.00	1.00	1.00				
FinalVolume:	169	237	0	0	367	46	195	0	315	0	0	0				
Saturation Flow Module:																
Adjustment:	1.00	1.00	1.00	1.00	1.00	1.00	1.00	1.00	1.00	1.00	1.00	1.00				
Lanes:	1.00	1.00	0.00	0.00	0.89	0.11	1.00	0.00	1.00	0.00	0.00	0.00				
Final Sat.:	501	539	0	0	512	64	495	0	592	0	0	0				
Capacity Analysis Module:																
Vol/Sat:	0.34	0.44	xxxx	xxxx	0.72	0.72	0.39	xxxx	0.53	xxxx	xxxx	xxxx				
Crit Moves:		****			****				****							
Delay/Veh:	13.1	14.0	0.0	0.0	22.6	22.6	14.1	0.0	14.8	0.0	0.0	0.0				
Delay Adj:	1.00	1.00	1.00	1.00	1.00	1.00	1.00	1.00	1.00	1.00	1.00	1.00				
AdjDel/Veh:	13.1	14.0	0.0	0.0	22.6	22.6	14.1	0.0	14.8	0.0	0.0	0.0				
LOS by Move:	B	B	*	*	C	C	B	*	B	*	*	*				
ApproachDel:	13.7				22.6			14.5			xxxxxx					
Delay Adj:	1.00				1.00			1.00			xxxxx					
ApprAdjDel:	13.7				22.6			14.5			xxxxxx					
LOS by Appr:	B				C			B			*					
AllWayAvgQ:	0.5	0.7	0.0	2.2	2.2	2.2	0.6	0.0	1.0	0.0	0.0	0.0				

Note: Queue reported is the number of cars per lane.

Church of the Woods
Opening Year (2008) With Project Traffic Conditions
Sunday Peak Hour With Alternative Improvements

Level Of Service Computation Report
2000 HCM 4-Way Stop Method (Base Volume Alternative)

Intersection #13 State Route 173/State Route 18

Cycle (sec):	100	Critical Vol./Cap.(X):	0.547
Loss Time (sec):	0 (Y+R=4.0 sec)	Average Delay (sec/veh):	12.5
Optimal Cycle:	0	Level Of Service:	B

Approach:	North Bound			South Bound			East Bound			West Bound		
Movement:	L -	T -	R	L -	T -	R	L -	T -	R	L -	T -	R
Control:	Stop Sign			Stop Sign			Stop Sign			Stop Sign		
Rights:	Include			Include			Include			Include		
Min. Green:	10	10	10	10	10	10	10	10	10	10	10	10
Lanes:	0 0	0 0	0	0 0	1! 0	0	1 0	1 0	0	0 0	1 0	1
Volume Module:												
Base Vol:	0	0	0	47	0	170	252	178	0	0	182	123
Growth Adj:	1.00	1.00	1.00	1.00	1.00	1.00	1.00	1.00	1.00	1.00	1.00	1.00
Initial Bse:	0	0	0	47	0	170	252	178	0	0	182	123
User Adj:	1.00	1.00	1.00	1.00	1.00	1.00	1.00	1.00	1.00	1.00	1.00	1.00
PHF Adj:	1.00	1.00	1.00	0.82	0.82	0.82	0.80	0.80	0.80	0.85	0.85	0.85
PHF Volume:	0	0	0	57	0	206	316	223	0	0	215	145
Reduct Vol:	0	0	0	0	0	0	0	0	0	0	0	0
Reduced Vol:	0	0	0	57	0	206	316	223	0	0	215	145
PCE Adj:	1.00	1.00	1.00	1.00	1.00	1.00	1.00	1.00	1.00	1.00	1.00	1.00
MLF Adj:	1.00	1.00	1.00	1.00	1.00	1.00	1.00	1.00	1.00	1.00	1.00	1.00
FinalVolume:	0	0	0	57	0	206	316	223	0	0	215	145
Saturation Flow Module:												
Adjustment:	1.00	1.00	1.00	1.00	1.00	1.00	1.00	1.00	1.00	1.00	1.00	1.00
Lanes:	0.00	0.00	0.00	0.21	0.01	0.78	1.00	1.00	0.00	0.00	1.00	1.00
Final Sat.:	0	0	0	138	0	501	577	626	0	0	594	670
Capacity Analysis Module:												
Vol/Sat:	xxxx	xxxx	xxxx	0.41	0.00	0.41	0.55	0.36	xxxx	xxxx	0.36	0.22
Crit Moves:						****	****				****	
Delay/Veh:	0.0	0.0	0.0	11.8	11.8	11.8	15.8	11.3	0.0	0.0	11.7	9.3
Delay Adj:	1.00	1.00	1.00	1.00	1.00	1.00	1.00	1.00	1.00	1.00	1.00	1.00
AdjDel/Veh:	0.0	0.0	0.0	11.8	11.8	11.8	15.8	11.3	0.0	0.0	11.7	9.3
LOS by Move:	*	*	*	B	B	B	C	B	*	*	B	A
ApproachDel:	xxxxxx			11.8			13.9			10.7		
Delay Adj:	xxxxx			1.00			1.00			1.00		
ApprAdjDel:	xxxxxx			11.8			13.9			10.7		
LOS by Appr:	*			B			B			B		
AllWayAvgQ:	0.0	0.0	0.0	0.6	0.6	0.6	1.1	0.5	0.0	0.0	0.5	0.3

Note: Queue reported is the number of cars per lane.

YEAR 2013 WITH PROJECT WITH ALTERNATIVE IMPROVEMENTS CONDITIONS

Church of the Woods
Year 2013 With Project Traffic Conditions
Saturday Peak Hour With Improvements

Level Of Service Computation Report
2000 HCM 4-Way Stop Method (Base Volume Alternative)

Intersection #3 Grass Valley Road/State Route 189

Cycle (sec):	100	Critical Vol./Cap.(X):	0.961
Loss Time (sec):	0 (Y+R=4.0 sec)	Average Delay (sec/veh):	29.6
Optimal Cycle:	0	Level Of Service:	D

Approach:	North Bound			South Bound			East Bound			West Bound		
Movement:	L -	T -	R	L -	T -	R	L -	T -	R	L -	T -	R
Control:	Stop Sign			Stop Sign			Stop Sign			Stop Sign		
Rights:	Include			Include			Include			Include		
Min. Green:	10	10	10	10	10	10	10	10	10	10	10	10
Lanes:	0 0	0 0	0	1 0	0 0	1	1 0	1 0	0	0 0	0 1	0
Volume Module:												
Base Vol:	0	0	0	390	0	274	133	221	0	0	90	205
Growth Adj:	1.00	1.00	1.00	1.00	1.00	1.00	1.00	1.00	1.00	1.00	1.00	1.00
Initial Bse:	0	0	0	390	0	274	133	221	0	0	90	205
User Adj:	1.00	1.00	1.00	1.00	1.00	1.00	1.00	1.00	1.00	1.00	1.00	1.00
PHF Adj:	1.00	1.00	1.00	0.81	0.81	0.81	0.78	0.78	0.78	0.83	0.83	0.83
PHF Volume:	0	0	0	481	0	338	171	284	0	0	108	246
Reduct Vol:	0	0	0	0	0	0	0	0	0	0	0	0
Reduced Vol:	0	0	0	481	0	338	171	284	0	0	108	246
PCE Adj:	1.00	1.00	1.00	1.00	1.00	1.00	1.00	1.00	1.00	1.00	1.00	1.00
MLF Adj:	1.00	1.00	1.00	1.00	1.00	1.00	1.00	1.00	1.00	1.00	1.00	1.00
FinalVolume:	0	0	0	481	0	338	171	284	0	0	108	246
Saturation Flow Module:												
Adjustment:	1.00	1.00	1.00	1.00	1.00	1.00	1.00	1.00	1.00	1.00	1.00	1.00
Lanes:	0.00	0.00	0.00	1.00	0.00	1.00	1.00	1.00	0.00	0.00	0.31	0.69
Final Sat.:	0	0	0	500	0	597	460	491	0	0	167	381
Capacity Analysis Module:												
Vol/Sat:	xxxx	xxxx	xxxx	0.96	xxxx	0.57	0.37	0.58	xxxx	xxxx	0.65	0.65
Crit Moves:				****				****				****
Delay/Veh:	0.0	0.0	0.0	57.3	0.0	16.2	14.9	19.1	0.0	0.0	20.3	20.3
Delay Adj:	1.00	1.00	1.00	1.00	1.00	1.00	1.00	1.00	1.00	1.00	1.00	1.00
AdjDel/Veh:	0.0	0.0	0.0	57.3	0.0	16.2	14.9	19.1	0.0	0.0	20.3	20.3
LOS by Move:	*	*	*	F	*	C	B	C	*	*	C	C
ApproachDel:	xxxxxx			40.3			17.5			20.3		
Delay Adj:	xxxxx			1.00			1.00			1.00		
ApprAdjDel:	xxxxxx			40.3			17.5			20.3		
LOS by Appr:	*			E			C			C		
AllWayAvgQ:	0.0	0.0	0.0	6.6	0.0	1.2	0.6	1.3	0.0	1.6	1.6	1.6

Note: Queue reported is the number of cars per lane.

Church of the Woods
Year 2013 With Project Traffic Conditions
Saturday Peak Hour With Improvements

Level Of Service Computation Report
2000 HCM 4-Way Stop Method (Base Volume Alternative)

Intersection #4 Daley Canyon Road/State Route 189

Cycle (sec):	100	Critical Vol./Cap.(X):	0.842
Loss Time (sec):	0 (Y+R=4.0 sec)	Average Delay (sec/veh):	28.0
Optimal Cycle:	0	Level Of Service:	D

Approach:	North Bound				South Bound				East Bound				West Bound			
Movement:	L	- T	- R		L	- T	- R		L	- T	- R		L	- T	- R	
Control:	Stop Sign				Stop Sign				Stop Sign				Stop Sign			
Rights:	Include				Include				Include				Include			
Min. Green:	10	10	10		10	10	10		10	10	10		10	10	10	
Lanes:	1 0	1 0	0		0 0	0 1	0		1 0	0 0	1		0 0	0 0	0	
Volume Module:																
Base Vol:	210	382	0		0	285	79		328	0	306		0	0	0	
Growth Adj:	1.00	1.00	1.00		1.00	1.00	1.00		1.00	1.00	1.00		1.00	1.00	1.00	
Initial Bse:	210	382	0		0	285	79		328	0	306		0	0	0	
User Adj:	1.00	1.00	1.00		1.00	1.00	1.00		1.00	1.00	1.00		1.00	1.00	1.00	
PHF Adj:	0.91	0.91	0.91		0.90	0.90	0.90		0.89	0.89	0.89		1.00	1.00	1.00	
PHF Volume:	232	422	0		0	316	88		367	0	342		0	0	0	
Reduct Vol:	0	0	0		0	0	0		0	0	0		0	0	0	
Reduced Vol:	232	422	0		0	316	88		367	0	342		0	0	0	
PCE Adj:	1.00	1.00	1.00		1.00	1.00	1.00		1.00	1.00	1.00		1.00	1.00	1.00	
MLF Adj:	1.00	1.00	1.00		1.00	1.00	1.00		1.00	1.00	1.00		1.00	1.00	1.00	
FinalVolume:	232	422	0		0	316	88		367	0	342		0	0	0	
Saturation Flow Module:																
Adjustment:	1.00	1.00	1.00		1.00	1.00	1.00		1.00	1.00	1.00		1.00	1.00	1.00	
Lanes:	1.00	1.00	0.00		0.00	0.78	0.22		1.00	0.00	1.00		0.00	0.00	0.00	
Final Sat.:	467	501	0		0	410	114		469	0	553		0	0	0	
Capacity Analysis Module:																
Vol/Sat:	0.50	0.84	xxxx		xxxx	0.77	0.77		0.78	xxxx	0.62		xxxx	xxxx	xxxx	
Crit Moves:		****				****			****							
Delay/Veh:	17.6	36.8	0.0		0.0	28.9	28.9		32.2	0.0	18.8		0.0	0.0	0.0	
Delay Adj:	1.00	1.00	1.00		1.00	1.00	1.00		1.00	1.00	1.00		1.00	1.00	1.00	
AdjDel/Veh:	17.6	36.8	0.0		0.0	28.9	28.9		32.2	0.0	18.8		0.0	0.0	0.0	
LOS by Move:	C	E	*		*	D	D		D	*	C		*	*	*	
ApproachDel:		30.0				28.9				25.7				xxxxxx		
Delay Adj:		1.00				1.00				1.00				xxxxx		
ApprAdjDel:		30.0				28.9				25.7				xxxxxx		
LOS by Appr:		D				D				D				*		
AllWayAvgQ:	0.9	3.8	0.0		2.8	2.8	2.8		2.8	0.0	1.5		0.0	0.0	0.0	

Note: Queue reported is the number of cars per lane.

Church of the Woods
Year 2013 With Project Traffic Conditions
Saturday Peak Hour With Improvements

Level Of Service Computation Report
2000 HCM 4-Way Stop Method (Base Volume Alternative)

Intersection #13 State Route 173/State Route 18

Cycle (sec): 100 Critical Vol./Cap.(X): 0.683
Loss Time (sec): 0 (Y+R=4.0 sec) Average Delay (sec/veh): 18.1
Optimal Cycle: 0 Level Of Service: C

Approach:	North Bound						South Bound						East Bound						West Bound					
Movement:	L	-	T	-	R		L	-	T	-	R		L	-	T	-	R		L	-	T	-	R	
Control:	Stop Sign						Stop Sign						Stop Sign						Stop Sign					
Rights:	Include						Include						Include						Include					
Min. Green:	10	10		10			10	10		10			10	10		10			10	10		10		
Lanes:	0	0	0	0	0		0	0	1!	0	0		1	0	1	0	0		0	0	1	0	1	
Volume Module:																								
Base Vol:	0	0		0			98		0		169		290		325		0		0		276		104	
Growth Adj:	1.00	1.00		1.00			1.00	1.00		1.00			1.00	1.00		1.00			1.00	1.00		1.00		
Initial Bse:	0	0		0			98		0		169		290		325		0		0		276		104	
User Adj:	1.00	1.00		1.00			1.00	1.00		1.00			1.00	1.00		1.00			1.00	1.00		1.00		
PHF Adj:	1.00	1.00		1.00			0.79	0.79		0.79			0.82	0.82		0.82			0.94	0.94		0.94		
PHF Volume:	0	0		0			125		0		215		356		399		0		0		294		111	
Reduct Vol:	0	0		0			0		0		0		0		0		0		0		0		0	
Reduced Vol:	0	0		0			125		0		215		356		399		0		0		294		111	
PCE Adj:	1.00	1.00		1.00			1.00	1.00		1.00			1.00	1.00		1.00			1.00	1.00		1.00		
MLF Adj:	1.00	1.00		1.00			1.00	1.00		1.00			1.00	1.00		1.00			1.00	1.00		1.00		
FinalVolume:	0	0		0			125		0		215		356		399		0		0		294		111	
Saturation Flow Module:																								
Adjustment:	1.00	1.00		1.00			1.00	1.00		1.00			1.00	1.00		1.00			1.00	1.00		1.00		
Lanes:	0.00	0.00		0.00			0.37	0.00		0.63			1.00	1.00		0.00			0.00	1.00		1.00		
Final Sat.:	0	0		0			218		0		375		540		584		0		0		538		597	
Capacity Analysis Module:																								
Vol/Sat:	xxxx	xxxx		xxxx			0.57	xxxx		0.57			0.66	0.68		xxxx			xxxx	0.55		0.19		
Crit Moves:							****							****						****				
Delay/Veh:	0.0	0.0		0.0			16.1	0.0		16.1			20.9	20.6		0.0			0.0	16.5		9.8		
Delay Adj:	1.00	1.00		1.00			1.00	1.00		1.00			1.00	1.00		1.00			1.00	1.00		1.00		
AdjDel/Veh:	0.0	0.0		0.0			16.1	0.0		16.1			20.9	20.6		0.0			0.0	16.5		9.8		
LOS by Move:	*	*		*			C	*		C			C	C		*			*	C		A		
ApproachDel:	xxxxxx						16.1						20.7						14.7					
Delay Adj:	xxxxx						1.00						1.00						1.00					
ApprAdjDel:	xxxxxx						16.1						20.7						14.7					
LOS by Appr:	*						C						C						B					
AllWayAvgQ:	0.0	0.0		0.0			1.2	1.2		1.2			1.7	1.9		0.0			0.0	1.1		0.2		

Note: Queue reported is the number of cars per lane.

Church of the Woods
Year 2013 With Project With Improvements
Sunday Peak Hour With Improvements

Level Of Service Computation Report
2000 HCM 4-Way Stop Method (Base Volume Alternative)

Intersection #3 Grass Valley Road/State Route 189

Cycle (sec):	100	Critical Vol./Cap.(X):	0.828
Loss Time (sec):	0 (Y+R=4.0 sec)	Average Delay (sec/veh):	20.0
Optimal Cycle:	0	Level Of Service:	C

Approach:	North Bound			South Bound			East Bound			West Bound		
Movement:	L -	T -	R	L -	T -	R	L -	T -	R	L -	T -	R
Control:	Stop Sign			Stop Sign			Stop Sign			Stop Sign		
Rights:	Include			Include			Include			Include		
Min. Green:	10	10	10	10	10	10	10	10	10	10	10	10
Lanes:	0 0	0 0	0	1 0	0 0	1	1 0	1 0	0	0 0	0 1	0
Volume Module:												
Base Vol:	0	0	0	406	0	186	76	167	0	0	57	189
Growth Adj:	1.00	1.00	1.00	1.00	1.00	1.00	1.00	1.00	1.00	1.00	1.00	1.00
Initial Bse:	0	0	0	406	0	186	76	167	0	0	57	189
User Adj:	1.00	1.00	1.00	1.00	1.00	1.00	1.00	1.00	1.00	1.00	1.00	1.00
PHF Adj:	1.00	1.00	1.00	0.90	0.90	0.90	0.91	0.91	0.91	0.83	0.83	0.83
PHF Volume:	0	0	0	451	0	207	83	183	0	0	69	229
Reduct Vol:	0	0	0	0	0	0	0	0	0	0	0	0
Reduced Vol:	0	0	0	451	0	207	83	183	0	0	69	229
PCE Adj:	1.00	1.00	1.00	1.00	1.00	1.00	1.00	1.00	1.00	1.00	1.00	1.00
MLF Adj:	1.00	1.00	1.00	1.00	1.00	1.00	1.00	1.00	1.00	1.00	1.00	1.00
FinalVolume:	0	0	0	451	0	207	83	183	0	0	69	229
Saturation Flow Module:												
Adjustment:	1.00	1.00	1.00	1.00	1.00	1.00	1.00	1.00	1.00	1.00	1.00	1.00
Lanes:	0.00	0.00	0.00	1.00	0.00	1.00	1.00	1.00	0.00	0.00	0.23	0.77
Final Sat.:	0	0	0	545	0	660	478	513	0	0	136	452
Capacity Analysis Module:												
Vol/Sat:	xxxx	xxxx	xxxx	0.83	xxxx	0.31	0.17	0.36	xxxx	xxxx	0.51	0.51
Crit Moves:				****				****				****
Delay/Veh:	0.0	0.0	0.0	32.6	0.0	10.4	11.4	12.9	0.0	0.0	14.5	14.5
Delay Adj:	1.00	1.00	1.00	1.00	1.00	1.00	1.00	1.00	1.00	1.00	1.00	1.00
AdjDel/Veh:	0.0	0.0	0.0	32.6	0.0	10.4	11.4	12.9	0.0	0.0	14.5	14.5
LOS by Move:	*	*	*	D	*	B	B	B	*	*	B	B
ApproachDel:	xxxxxx			25.6			12.5			14.5		
Delay Adj:	xxxxx			1.00			1.00			1.00		
ApprAdjDel:	xxxxxx			25.6			12.5			14.5		
LOS by Appr:	*			D			B			B		
AllWayAvgQ:	0.0	0.0	0.0	3.5	0.0	0.4	0.2	0.5	0.0	0.9	0.9	0.9

Note: Queue reported is the number of cars per lane.

Church of the Woods
Year 2013 With Project With Improvements
Sunday Peak Hour With Improvements

Level Of Service Computation Report
2000 HCM 4-Way Stop Method (Base Volume Alternative)

Intersection #4 Daley Canyon Road/State Route 189

Cycle (sec):	100	Critical Vol./Cap.(X):	0.940
Loss Time (sec):	0 (Y+R=4.0 sec)	Average Delay (sec/veh):	28.8
Optimal Cycle:	0	Level Of Service:	D

Approach:	North Bound				South Bound				East Bound				West Bound			
Movement:	L	- T	- R		L	- T	- R		L	- T	- R		L	- T	- R	
Control:	Stop Sign				Stop Sign				Stop Sign				Stop Sign			
Rights:	Include				Include				Include				Include			
Min. Green:	10	10	10		10	10	10		10	10	10		10	10	10	
Lanes:	1 0	1 0	0		0 0	0 1	0		1 0	0 0	1		0 0	0 0	0	
Volume Module:																
Base Vol:	189	278	0		0	403	42		196	0	358		0	0	0	
Growth Adj:	1.00	1.00	1.00		1.00	1.00	1.00		1.00	1.00	1.00		1.00	1.00	1.00	
Initial Bse:	189	278	0		0	403	42		196	0	358		0	0	0	
User Adj:	1.00	1.00	1.00		1.00	1.00	1.00		1.00	1.00	1.00		1.00	1.00	1.00	
PHF Adj:	0.86	0.86	0.86		0.87	0.87	0.87		0.96	0.96	0.96		1.00	1.00	1.00	
PHF Volume:	220	324	0		0	465	48		204	0	373		0	0	0	
Reduct Vol:	0	0	0		0	0	0		0	0	0		0	0	0	
Reduced Vol:	220	324	0		0	465	48		204	0	373		0	0	0	
PCE Adj:	1.00	1.00	1.00		1.00	1.00	1.00		1.00	1.00	1.00		1.00	1.00	1.00	
MLF Adj:	1.00	1.00	1.00		1.00	1.00	1.00		1.00	1.00	1.00		1.00	1.00	1.00	
FinalVolume:	220	324	0		0	465	48		204	0	373		0	0	0	
Saturation Flow Module:																
Adjustment:	1.00	1.00	1.00		1.00	1.00	1.00		1.00	1.00	1.00		1.00	1.00	1.00	
Lanes:	1.00	1.00	0.00		0.00	0.91	0.09		1.00	0.00	1.00		0.00	0.00	0.00	
Final Sat.:	475	509	0		0	495	52		466	0	550		0	0	0	
Capacity Analysis Module:																
Vol/Sat:	0.46	0.64	xxxx		xxxx	0.94	0.94		0.44	xxxx	0.68		xxxx	xxxx	xxxx	
Crit Moves:		****				****					****					
Delay/Veh:	16.3	20.7	0.0		0.0	50.1	50.1		16.0	0.0	21.0		0.0	0.0	0.0	
Delay Adj:	1.00	1.00	1.00		1.00	1.00	1.00		1.00	1.00	1.00		1.00	1.00	1.00	
AdjDel/Veh:	16.3	20.7	0.0		0.0	50.1	50.1		16.0	0.0	21.0		0.0	0.0	0.0	
LOS by Move:	C	C	*		*	F	F		C	*	C		*	*	*	
ApproachDel:		18.9				50.1				19.2				xxxxxx		
Delay Adj:		1.00				1.00				1.00				xxxxx		
ApprAdjDel:		18.9				50.1				19.2				xxxxxx		
LOS by Appr:		C				F				C				*		
AllWayAvgQ:	0.8	1.6	0.0		6.2	6.2	6.2		0.7	0.0	1.8		0.0	0.0	0.0	

Note: Queue reported is the number of cars per lane.

Church of the Woods
Year 2013 With Project With Improvements
Sunday Peak Hour With Improvements

Level Of Service Computation Report
2000 HCM 4-Way Stop Method (Base Volume Alternative)

Intersection #13 State Route 173/State Route 18

Cycle (sec):	100	Critical Vol./Cap.(X):	0.704
Loss Time (sec):	0 (Y+R=4.0 sec)	Average Delay (sec/veh):	15.8
Optimal Cycle:	0	Level Of Service:	C

Approach:	North Bound			South Bound			East Bound			West Bound		
Movement:	L -	T -	R	L -	T -	R	L -	T -	R	L -	T -	R
Control:	Stop Sign			Stop Sign			Stop Sign			Stop Sign		
Rights:	Include			Include			Include			Include		
Min. Green:	10	10	10	10	10	10	10	10	10	10	10	10
Lanes:	0 0	0 0	0	0 0	1! 0	0	1 0	1 0	0	0 0	1 0	1
Volume Module:												
Base Vol:	0	0	0	52	0	219	309	197	0	0	202	135
Growth Adj:	1.00	1.00	1.00	1.00	1.00	1.00	1.00	1.00	1.00	1.00	1.00	1.00
Initial Bse:	0	0	0	52	0	219	309	197	0	0	202	135
User Adj:	1.00	1.00	1.00	1.00	1.00	1.00	1.00	1.00	1.00	1.00	1.00	1.00
PHF Adj:	1.00	1.00	1.00	0.82	0.82	0.82	0.80	0.80	0.80	0.85	0.85	0.85
PHF Volume:	0	0	0	63	0	266	387	247	0	0	238	159
Reduct Vol:	0	0	0	0	0	0	0	0	0	0	0	0
Reduced Vol:	0	0	0	63	0	266	387	247	0	0	238	159
PCE Adj:	1.00	1.00	1.00	1.00	1.00	1.00	1.00	1.00	1.00	1.00	1.00	1.00
MLF Adj:	1.00	1.00	1.00	1.00	1.00	1.00	1.00	1.00	1.00	1.00	1.00	1.00
FinalVolume:	0	0	0	63	0	266	387	247	0	0	238	159
Saturation Flow Module:												
Adjustment:	1.00	1.00	1.00	1.00	1.00	1.00	1.00	1.00	1.00	1.00	1.00	1.00
Lanes:	0.00	0.00	0.00	0.19	0.00	0.81	1.00	1.00	0.00	0.00	1.00	1.00
Final Sat.:	0	0	0	119	0	500	550	594	0	0	556	621
Capacity Analysis Module:												
Vol/Sat:	xxxx	xxxx	xxxx	0.53	xxxx	0.53	0.70	0.42	xxxx	xxxx	0.43	0.26
Crit Moves:				****			****				****	
Delay/Veh:	0.0	0.0	0.0	14.3	0.0	14.3	22.6	12.7	0.0	0.0	13.4	10.1
Delay Adj:	1.00	1.00	1.00	1.00	1.00	1.00	1.00	1.00	1.00	1.00	1.00	1.00
AdjDel/Veh:	0.0	0.0	0.0	14.3	0.0	14.3	22.6	12.7	0.0	0.0	13.4	10.1
LOS by Move:	*	*	*	B	*	B	C	B	*	*	B	B
ApproachDel:	xxxxxx			14.3			18.8			12.1		
Delay Adj:	xxxxx			1.00			1.00			1.00		
ApprAdjDel:	xxxxxx			14.3			18.8			12.1		
LOS by Appr:	*			B			C			B		
AllWayAvgQ:	0.0	0.0	0.0	1.0	1.0	1.0	2.1	0.7	0.0	0.0	0.7	0.3

Note: Queue reported is the number of cars per lane.

YEAR 2030 WITH PROJECT WITH ALTERNATIVE IMPROVEMENTS CONDITIONS

Church of the Woods
Year 2030 With Project With Alternative Mitigations
Saturday Peak Hour

Level Of Service Computation Report
2000 HCM Unsignalized Method (Base Volume Alternative)

Intersection #1 North Road/State Route 189

Average Delay (sec/veh): 8.3 Worst Case Level Of Service: C[22.8]

Approach:	North Bound			South Bound			East Bound			West Bound		
Movement:	L	T	R	L	T	R	L	T	R	L	T	R
Control:	Stop Sign			Stop Sign			Uncontrolled			Uncontrolled		
Rights:	Include			Include			Include			Include		
Lanes:	0 0 0 0 0			1 0 0 0 1			0 1 0 0 0			0 0 1 0 1		
Volume Module:												
Base Vol:	0	0	0	287	0	87	64	214	0	0	205	239
Growth Adj:	1.00	1.00	1.00	1.00	1.00	1.00	1.00	1.00	1.00	1.00	1.00	1.00
Initial Bse:	0	0	0	287	0	87	64	214	0	0	205	239
User Adj:	1.00	1.00	1.00	1.00	1.00	1.00	1.00	1.00	1.00	1.00	1.00	1.00
PHF Adj:	0.95	0.95	0.95	0.95	0.95	0.95	0.95	0.95	0.95	0.95	0.95	0.95
PHF Volume:	0	0	0	302	0	92	67	225	0	0	216	252
Reduct Vol:	0	0	0	0	0	0	0	0	0	0	0	0
Final Vol.:	0	0	0	302	0	92	67	225	0	0	216	252
Critical Gap Module:												
Critical Gp:	xxxxx	xxxx	xxxxx	6.4	xxxx	6.2	4.1	xxxx	xxxxx	xxxxx	xxxx	xxxxx
FollowUpTim:	xxxxx	xxxx	xxxxx	3.5	xxxx	3.3	2.2	xxxx	xxxxx	xxxxx	xxxx	xxxxx
Capacity Module:												
Cnflict Vol:	xxxx	xxxx	xxxxx	576	xxxx	216	467	xxxx	xxxxx	xxxx	xxxx	xxxxx
Potent Cap.:	xxxx	xxxx	xxxxx	483	xxxx	829	1105	xxxx	xxxxx	xxxx	xxxx	xxxxx
Move Cap.:	xxxx	xxxx	xxxxx	459	xxxx	829	1105	xxxx	xxxxx	xxxx	xxxx	xxxxx
Volume/Cap:	xxxx	xxxx	xxxx	0.66	xxxx	0.11	0.06	xxxx	xxxx	xxxx	xxxx	xxxx
Level Of Service Module:												
2Way95thQ:	xxxx	xxxx	xxxxx	4.7	xxxx	0.4	0.2	xxxx	xxxxx	xxxx	xxxx	xxxxx
Control Del:	xxxxx	xxxx	xxxxx	26.7	xxxx	9.9	8.5	xxxx	xxxxx	xxxxx	xxxx	xxxxx
LOS by Move:	*	*	*	D	*	A	A	*	*	*	*	*
Movement:	LT	LTR	RT	LT	LTR	RT	LT	LTR	RT	LT	LTR	RT
Shared Cap.:	xxxx	xxxx	xxxxx	xxxx	xxxx	xxxxx	xxxx	xxxx	xxxxx	xxxx	xxxx	xxxxx
SharedQueue:	xxxxx	xxxx	xxxxx	xxxxx	xxxx	xxxxx	0.2	xxxx	xxxxx	xxxxx	xxxx	xxxxx
Shrd ConDel:	xxxxx	xxxx	xxxxx	xxxxx	xxxx	xxxxx	8.5	xxxx	xxxxx	xxxxx	xxxx	xxxxx
Shared LOS:	*	*	*	*	*	*	A	*	*	*	*	*
ApproachDel:	xxxxxx			22.8			xxxxxx			xxxxxx		
ApproachLOS:	*			C			*			*		

Note: Queue reported is the number of cars per lane.

Church of the Woods
Year 2030 With Project With Alternative Mitigations
Saturday Peak Hour

Level Of Service Computation Report
2000 HCM 4-Way Stop Method (Base Volume Alternative)

Intersection #3 Grass Valley Road/State Route 189

Cycle (sec): 100 | Critical Vol./Cap.(X): 0.769
Loss Time (sec): 0 (Y+R=4.0 sec) | Average Delay (sec/veh): 21.2
Optimal Cycle: 0 | Level Of Service: C

Approach:	North Bound						South Bound						East Bound						West Bound					
Movement:	L	-	T	-	R		L	-	T	-	R		L	-	T	-	R		L	-	T	-	R	
Control:	Stop Sign						Stop Sign						Stop Sign						Stop Sign					
Rights:	Include						Include						Include						Include					
Min. Green:	10	10	10	10	10	10	10	10	10	10	10	10	10	10	10	10	10	10	10	10	10	10	10	10
Lanes:	0	0	0	0	0		2	0	0	0	1		1	0	1	0	0		0	0	1	0	1	
Volume Module:																								
Base Vol:	0	0	0	547	0	416	203	270	0	0	110	293												
Growth Adj:	1.00	1.00	1.00	1.00	1.00	1.00	1.00	1.00	1.00	1.00	1.00	1.00												
Initial Bse:	0	0	0	547	0	416	203	270	0	0	110	293												
User Adj:	1.00	1.00	1.00	1.00	1.00	1.00	1.00	1.00	1.00	1.00	1.00	1.00												
PHF Adj:	0.95	0.95	0.95	0.95	0.95	0.95	0.95	0.95	0.95	0.95	0.95	0.95												
PHF Volume:	0	0	0	576	0	438	214	284	0	0	116	308												
Reduct Vol:	0	0	0	0	0	0	0	0	0	0	0	0												
Reduced Vol:	0	0	0	576	0	438	214	284	0	0	116	308												
PCE Adj:	1.00	1.00	1.00	1.00	1.00	1.00	1.00	1.00	1.00	1.00	1.00	1.00												
MLF Adj:	1.00	1.00	1.00	1.00	1.00	1.00	1.00	1.00	1.00	1.00	1.00	1.00												
Final Vol.:	0	0	0	576	0	438	214	284	0	0	116	308												
Saturation Flow Module:																								
Adjustment:	1.00	1.00	1.00	1.00	1.00	1.00	1.00	1.00	1.00	1.00	1.00	1.00												
Lanes:	0.00	0.00	0.00	2.00	0.00	1.00	1.00	1.00	0.00	0.00	1.00	1.00												
Final Sat.:	0	0	0	956	0	569	435	465	0	0	449	499												
Capacity Analysis Module:																								
Vol/Sat:	xxxx	xxxx	xxxx	0.60	xxxx	0.77	0.49	0.61	xxxx	xxxx	0.26	0.62												
Crit Moves:						****		****				****												
Delay/Veh:	0.0	0.0	0.0	20.6	0.0	26.4	18.1	21.1	0.0	0.0	13.1	20.1												
Delay Adj:	1.00	1.00	1.00	1.00	1.00	1.00	1.00	1.00	1.00	1.00	1.00	1.00												
AdjDel/Veh:	0.0	0.0	0.0	20.6	0.0	26.4	18.1	21.1	0.0	0.0	13.1	20.1												
LOS by Move:	*	*	*	C	*	D	C	C	*	*	B	C												
ApproachDel:	xxxxxx				23.1			19.9			18.2													
Delay Adj:	xxxxx				1.00			1.00			1.00													
ApprAdjDel:	xxxxxx				23.1			19.9			18.2													
LOS by Appr:	*				C			C			C													
AllWayAvgQ:	0.0	0.0	0.0	1.4	0.0	2.8	0.9	1.4	0.0	0.0	0.3	1.4												

Note: Queue reported is the number of cars per lane.

Church of the Woods
Year 2030 With Project With Alternative Mitigations
Saturday Peak Hour

Level Of Service Computation Report
2000 HCM 4-Way Stop Method (Base Volume Alternative)

Intersection #5 North Bay Road/State Route 189

Cycle (sec):	100	Critical Vol./Cap.(X):	0.994
Loss Time (sec):	0 (Y+R=4.0 sec)	Average Delay (sec/veh):	31.2
Optimal Cycle:	0	Level Of Service:	D

Approach:	North Bound			South Bound			East Bound			West Bound		
Movement:	L -	T -	R	L -	T -	R	L -	T -	R	L -	T -	R
Control:	Stop Sign			Stop Sign			Stop Sign			Stop Sign		
Rights:	Include			Include			Include			Include		
Min. Green:	10	10	10	10	10	10	10	10	10	10	10	10
Lanes:	0 0	0 0	0	1 0	0 0	2	2 0	1 0	0	0 0	1 0	1
Volume Module:												
Base Vol:	0	0	0	235	0	471	499	417	0	0	285	177
Growth Adj:	1.00	1.00	1.00	1.00	1.00	1.00	1.00	1.00	1.00	1.00	1.00	1.00
Initial Bse:	0	0	0	235	0	471	499	417	0	0	285	177
User Adj:	1.00	1.00	1.00	1.00	1.00	1.00	1.00	1.00	1.00	1.00	1.00	1.00
PHF Adj:	0.95	0.95	0.95	0.95	0.95	0.95	0.95	0.95	0.95	0.95	0.95	0.95
PHF Volume:	0	0	0	247	0	496	525	439	0	0	300	186
Reduct Vol:	0	0	0	0	0	0	0	0	0	0	0	0
Reduced Vol:	0	0	0	247	0	496	525	439	0	0	300	186
PCE Adj:	1.00	1.00	1.00	1.00	1.00	1.00	1.00	1.00	1.00	1.00	1.00	1.00
MLF Adj:	1.00	1.00	1.00	1.00	1.00	1.00	1.00	1.00	1.00	1.00	1.00	1.00
Final Vol.:	0	0	0	247	0	496	525	439	0	0	300	186
Saturation Flow Module:												
Adjustment:	1.00	1.00	1.00	1.00	1.00	1.00	1.00	1.00	1.00	1.00	1.00	1.00
Lanes:	0.00	0.00	0.00	1.00	0.00	2.00	2.00	1.00	0.00	0.00	1.00	1.00
Final Sat.:	0	0	0	423	0	979	823	442	0	0	435	472
Capacity Analysis Module:												
Vol/Sat:	xxxx	xxxx	xxxx	0.59	xxxx	0.51	0.64	0.99	xxxx	xxxx	0.69	0.39
Crit Moves:				****				****			****	
Delay/Veh:	0.0	0.0	0.0	22.0	0.0	16.9	25.0	69.9	0.0	0.0	26.7	14.8
Delay Adj:	1.00	1.00	1.00	1.00	1.00	1.00	1.00	1.00	1.00	1.00	1.00	1.00
AdjDel/Veh:	0.0	0.0	0.0	22.0	0.0	16.9	25.0	69.9	0.0	0.0	26.7	14.8
LOS by Move:	*	*	*	C	*	C	D	F	*	*	D	B
ApproachDel:	xxxxxx			18.6			45.4			22.2		
Delay Adj:	xxxxx			1.00			1.00			1.00		
ApprAdjDel:	xxxxxx			18.6			45.4			22.2		
LOS by Appr:	*			C			E			C		
AllWayAvgQ:	0.0	0.0	0.0	1.3	0.0	0.9	1.6	7.2	0.0	0.0	1.9	0.6

Note: Queue reported is the number of cars per lane.

Church of the Woods
Year 2030 With Project With Alternative Mitigations
Saturday Peak Hour

Level Of Service Computation Report
2000 HCM Unsignalized Method (Base Volume Alternative)

Intersection #8 Bear Springs Road/State Route 18

Average Delay (sec/veh): 2.1 Worst Case Level Of Service: C[24.7]

Approach:	North Bound					South Bound					East Bound					West Bound				
Movement:	L	-	T	-	R	L	-	T	-	R	L	-	T	-	R	L	-	T	-	R
Control:	Stop Sign					Stop Sign					Uncontrolled					Uncontrolled				
Rights:	Include					Include					Include					Include				
Lanes:	0	0	0	0	1	0	0	0	0	1	1	0	0	1	0	1	0	0	1	0
Volume Module:																				
Base Vol:	0	0	9	0	0	129	82	971	2	16	883	47								
Growth Adj:	1.00	1.00	1.00	1.00	1.00	1.00	1.00	1.00	1.00	1.00	1.00	1.00								
Initial Bse:	0	0	9	0	0	129	82	971	2	16	883	47								
User Adj:	1.00	1.00	1.00	1.00	1.00	1.00	1.00	1.00	1.00	1.00	1.00	1.00								
PHF Adj:	0.95	0.95	0.95	0.95	0.95	0.95	0.95	0.95	0.95	0.95	0.95	0.95								
PHF Volume:	0	0	9	0	0	136	86	1022	2	17	929	49								
Reduct Vol:	0	0	0	0	0	0	0	0	0	0	0	0								
Final Vol.:	0	0	9	0	0	136	86	1022	2	17	929	49								
Critical Gap Module:																				
Critical Gp:	xxxxx	xxxx	6.2	xxxxx	xxxx	6.2	4.1	xxxx	xxxxx	4.1	xxxx	xxxxx								
FollowUpTim:	xxxxx	xxxx	3.3	xxxxx	xxxx	3.3	2.2	xxxx	xxxxx	2.2	xxxx	xxxxx								
Capacity Module:																				
Cnflict Vol:	xxxx	xxxx	1023	xxxx	xxxx	954	979	xxxx	xxxxx	1024	xxxx	xxxxx								
Potent Cap.:	xxxx	xxxx	289	xxxx	xxxx	316	713	xxxx	xxxxx	686	xxxx	xxxxx								
Move Cap.:	xxxx	xxxx	289	xxxx	xxxx	316	713	xxxx	xxxxx	686	xxxx	xxxxx								
Total Cap:	0	713	xxxxx	0	707	xxxxx	xxxx	xxxx	xxxxx	xxxx	xxxx	xxxxx								
Volume/Cap:	xxxx	xxxx	0.03	xxxx	xxxx	0.43	0.12	xxxx	xxxx	0.02	xxxx	xxxx								
Level Of Service Module:																				
2Way95thQ:	xxxx	xxxx	0.1	xxxx	xxxx	2.1	0.4	xxxx	xxxxx	0.1	xxxx	xxxxx								
Control Del:	xxxxx	xxxx	17.9	xxxxx	xxxx	24.7	10.7	xxxx	xxxxx	10.4	xxxx	xxxxx								
LOS by Move:	*	*	C	*	*	C	B	*	*	B	*	*								
Movement:	LT	-	LTR	-	RT	LT	-	LTR	-	RT	LT	-	LTR	-	RT	LT	-	LTR	-	RT
Shared Cap.:	xxxx	xxxx	xxxxx	xxxx	xxxx	xxxxx	xxxx	xxxx	xxxxx	xxxx	xxxx	xxxxx								
SharedQueue:	xxxxx	xxxx	xxxxx	xxxxx	xxxx	xxxxx	xxxxx	xxxx	xxxxx	xxxxx	xxxx	xxxxx								
Shrd ConDel:	xxxxx	xxxx	xxxxx	xxxxx	xxxx	xxxxx	xxxxx	xxxx	xxxxx	xxxxx	xxxx	xxxxx								
Shared LOS:	*	*	*	*	*	*	*	*	*	*	*	*								
ApproachDel:	17.9			24.7			xxxxxx			xxxxxx										
ApproachLOS:	C			C			*			*										

Note: Queue reported is the number of cars per lane.

Church of the Woods
Year 2030 With Project With Alternative Mitigations
Saturday Peak Hour

Level Of Service Computation Report
2000 HCM 4-Way Stop Method (Base Volume Alternative)

Intersection #13 State Route 173/State Route 18

Cycle (sec): 100 | Critical Vol./Cap.(X): 0.933
Loss Time (sec): 0 (Y+R=4.0 sec) | Average Delay (sec/veh): 31.3
Optimal Cycle: 0 | Level Of Service: D

Approach:	North Bound			South Bound			East Bound			West Bound		
Movement:	L	T	R	L	T	R	L	T	R	L	T	R
Control:	Stop Sign			Stop Sign			Stop Sign			Stop Sign		
Rights:	Include			Include			Include			Include		
Min. Green:	10	10	10	10	10	10	10	10	10	10	10	10
Lanes:	0 0	0 0	0	0 0	1! 0	0	1 0	1 0	0	0 0	1 0	1
Volume Module:												
Base Vol:	0	0	0	150	0	257	442	395	0	0	336	159
Growth Adj:	1.00	1.00	1.00	1.00	1.00	1.00	1.00	1.00	1.00	1.00	1.00	1.00
Initial Bse:	0	0	0	150	0	257	442	395	0	0	336	159
User Adj:	1.00	1.00	1.00	1.00	1.00	1.00	1.00	1.00	1.00	1.00	1.00	1.00
PHF Adj:	0.95	0.95	0.95	0.95	0.95	0.95	0.95	0.95	0.95	0.95	0.95	0.95
PHF Volume:	0	0	0	158	0	271	465	416	0	0	354	167
Reduct Vol:	0	0	0	0	0	0	0	0	0	0	0	0
Reduced Vol:	0	0	0	158	0	271	465	416	0	0	354	167
PCE Adj:	1.00	1.00	1.00	1.00	1.00	1.00	1.00	1.00	1.00	1.00	1.00	1.00
MLF Adj:	1.00	1.00	1.00	1.00	1.00	1.00	1.00	1.00	1.00	1.00	1.00	1.00
Final Vol.:	0	0	0	158	0	271	465	416	0	0	354	167
Saturation Flow Module:												
Adjustment:	1.00	1.00	1.00	1.00	1.00	1.00	1.00	1.00	1.00	1.00	1.00	1.00
Lanes:	0.00	0.00	0.00	0.37	0.00	0.63	1.00	1.00	0.00	0.00	1.00	1.00
Final Sat.:	0	0	0	211	0	362	499	535	0	0	499	551
Capacity Analysis Module:												
Vol/Sat:	xxxx	xxxx	xxxx	0.75	xxxx	0.75	0.93	0.78	xxxx	xxxx	0.71	0.30
Crit Moves:				****			****				****	
Delay/Veh:	0.0	0.0	0.0	24.8	0.0	24.8	51.5	28.7	0.0	0.0	24.8	11.8
Delay Adj:	1.00	1.00	1.00	1.00	1.00	1.00	1.00	1.00	1.00	1.00	1.00	1.00
AdjDel/Veh:	0.0	0.0	0.0	24.8	0.0	24.8	51.5	28.7	0.0	0.0	24.8	11.8
LOS by Move:	*	*	*	C	*	C	F	D	*	*	C	B
ApproachDel:	xxxxxx			24.8			40.8			20.6		
Delay Adj:	xxxxx			1.00			1.00			1.00		
ApprAdjDel:	xxxxxx			24.8			40.8			20.6		
LOS by Appr:	*			C			E			C		
AllWayAvgQ:	0.0	0.0	0.0	2.5	2.5	2.5	5.8	2.9	0.0	0.0	2.1	0.4

Note: Queue reported is the number of cars per lane.

Church of the Woods
Year 2030 With Project With Alternative Mitigations
Sunday Peak Hour

Level Of Service Computation Report
2000 HCM Unsignalized Method (Base Volume Alternative)

Intersection #1 North Road/State Route 189

Average Delay (sec/veh): 5.1 Worst Case Level Of Service: B[13.1]

Approach:	North Bound			South Bound			East Bound			West Bound		
Movement:	L	T	R	L	T	R	L	T	R	L	T	R
Control:	Stop Sign			Stop Sign			Uncontrolled			Uncontrolled		
Rights:	Include			Include			Include			Include		
Lanes:	0 0 0 0 0			1 0 0 0 1			0 1 0 0 0			0 0 1 0 1		
Volume Module:												
Base Vol:	0	0	0	174	0	88	62	105	0	0	195	153
Growth Adj:	1.00	1.00	1.00	1.00	1.00	1.00	1.00	1.00	1.00	1.00	1.00	1.00
Initial Bse:	0	0	0	174	0	88	62	105	0	0	195	153
User Adj:	1.00	1.00	1.00	1.00	1.00	1.00	1.00	1.00	1.00	1.00	1.00	1.00
PHF Adj:	0.95	0.95	0.95	0.95	0.95	0.95	0.95	0.95	0.95	0.95	0.95	0.95
PHF Volume:	0	0	0	183	0	93	65	111	0	0	205	161
Reduct Vol:	0	0	0	0	0	0	0	0	0	0	0	0
Final Vol.:	0	0	0	183	0	93	65	111	0	0	205	161
Critical Gap Module:												
Critical Gp:	xxxxx	xxxx	xxxxx	6.4	xxxx	6.2	4.1	xxxx	xxxxx	xxxxx	xxxx	xxxxx
FollowUpTim:	xxxxx	xxxx	xxxxx	3.5	xxxx	3.3	2.2	xxxx	xxxxx	xxxxx	xxxx	xxxxx
Capacity Module:												
Cnflict Vol:	xxxx	xxxx	xxxxx	446	xxxx	205	366	xxxx	xxxxx	xxxx	xxxx	xxxxx
Potent Cap.:	xxxx	xxxx	xxxxx	573	xxxx	840	1203	xxxx	xxxxx	xxxx	xxxx	xxxxx
Move Cap.:	xxxx	xxxx	xxxxx	549	xxxx	840	1203	xxxx	xxxxx	xxxx	xxxx	xxxxx
Volume/Cap:	xxxx	xxxx	xxxx	0.33	xxxx	0.11	0.05	xxxx	xxxx	xxxx	xxxx	xxxx
Level Of Service Module:												
2Way95thQ:	xxxx	xxxx	xxxxx	1.5	xxxx	0.4	0.2	xxxx	xxxxx	xxxx	xxxx	xxxxx
Control Del:	xxxxx	xxxx	xxxxx	14.8	xxxx	9.8	8.2	xxxx	xxxxx	xxxxx	xxxx	xxxxx
LOS by Move:	*	*	*	B	*	A	A	*	*	*	*	*
Movement:	LT	LTR	RT	LT	LTR	RT	LT	LTR	RT	LT	LTR	RT
Shared Cap.:	xxxx	xxxx	xxxxx	xxxx	xxxx	xxxxx	xxxx	xxxx	xxxxx	xxxx	xxxx	xxxxx
SharedQueue:	xxxxx	xxxx	xxxxx	xxxxx	xxxx	xxxxx	0.2	xxxx	xxxxx	xxxxx	xxxx	xxxxx
Shrd ConDel:	xxxxx	xxxx	xxxxx	xxxxx	xxxx	xxxxx	8.2	xxxx	xxxxx	xxxxx	xxxx	xxxxx
Shared LOS:	*	*	*	*	*	*	A	*	*	*	*	*
ApproachDel:	xxxxxx			13.1			xxxxxx			xxxxxx		
ApproachLOS:	*			B			*			*		

Note: Queue reported is the number of cars per lane.

Church of the Woods
Year 2030 With Project With Alternative Mitigations
Sunday Peak Hour

Level Of Service Computation Report
2000 HCM 4-Way Stop Method (Base Volume Alternative)

Intersection #3 Grass Valley Road/State Route 189

Cycle (sec):	100	Critical Vol./Cap.(X):	0.553
Loss Time (sec):	0 (Y+R=4.0 sec)	Average Delay (sec/veh):	15.0
Optimal Cycle:	0	Level Of Service:	C

Approach:	North Bound			South Bound			East Bound			West Bound		
Movement:	L -	T -	R	L -	T -	R	L -	T -	R	L -	T -	R
Control:	Stop Sign			Stop Sign			Stop Sign			Stop Sign		
Rights:	Include			Include			Include			Include		
Min. Green:	10	10	10	10	10	10	10	10	10	10	10	10
Lanes:	0 0	0 0	0	2 0	0 0	1	1 0	1 0	0	0 0	1 0	1
Volume Module:												
Base Vol:	0	0	0	546	0	283	115	204	0	0	69	241
Growth Adj:	1.00	1.00	1.00	1.00	1.00	1.00	1.00	1.00	1.00	1.00	1.00	1.00
Initial Bse:	0	0	0	546	0	283	115	204	0	0	69	241
User Adj:	1.00	1.00	1.00	1.00	1.00	1.00	1.00	1.00	1.00	1.00	1.00	1.00
PHF Adj:	0.95	0.95	0.95	0.95	0.95	0.95	0.95	0.95	0.95	0.95	0.95	0.95
PHF Volume:	0	0	0	575	0	298	121	215	0	0	73	254
Reduct Vol:	0	0	0	0	0	0	0	0	0	0	0	0
Reduced Vol:	0	0	0	575	0	298	121	215	0	0	73	254
PCE Adj:	1.00	1.00	1.00	1.00	1.00	1.00	1.00	1.00	1.00	1.00	1.00	1.00
MLF Adj:	1.00	1.00	1.00	1.00	1.00	1.00	1.00	1.00	1.00	1.00	1.00	1.00
Final Vol.:	0	0	0	575	0	298	121	215	0	0	73	254
Saturation Flow Module:												
Adjustment:	1.00	1.00	1.00	1.00	1.00	1.00	1.00	1.00	1.00	1.00	1.00	1.00
Lanes:	0.00	0.00	0.00	2.00	0.00	1.00	1.00	1.00	0.00	0.00	1.00	1.00
Final Sat.:	0	0	0	1040	0	627	462	496	0	0	488	544
Capacity Analysis Module:												
Vol/Sat:	xxxx	xxxx	xxxx	0.55	xxxx	0.48	0.26	0.43	xxxx	xxxx	0.15	0.47
Crit Moves:				****				****				****
Delay/Veh:	0.0	0.0	0.0	17.4	0.0	13.2	12.8	14.8	0.0	0.0	11.0	14.3
Delay Adj:	1.00	1.00	1.00	1.00	1.00	1.00	1.00	1.00	1.00	1.00	1.00	1.00
AdjDel/Veh:	0.0	0.0	0.0	17.4	0.0	13.2	12.8	14.8	0.0	0.0	11.0	14.3
LOS by Move:	*	*	*	C	*	B	B	B	*	*	B	B
ApproachDel:	xxxxxx			15.9			14.1			13.6		
Delay Adj:	xxxxx			1.00			1.00			1.00		
ApprAdjDel:	xxxxxx			15.9			14.1			13.6		
LOS by Appr:	*			C			B			B		
AllWayAvgQ:	0.0	0.0	0.0	1.1	0.0	0.8	0.3	0.7	0.0	0.0	0.2	0.8

Note: Queue reported is the number of cars per lane.

Church of the Woods
Year 2030 With Project With Alternative Mitigations
Sunday Peak Hour

Level Of Service Computation Report
2000 HCM 4-Way Stop Method (Base Volume Alternative)

Intersection #5 North Bay Road/State Route 189

Cycle (sec): 100 Critical Vol./Cap.(X): 0.695
Loss Time (sec): 0 (Y+R=4.0 sec) Average Delay (sec/veh): 17.8
Optimal Cycle: 0 Level Of Service: C

Approach:	North Bound				South Bound				East Bound				West Bound			
Movement:	L	- T	- R		L	- T	- R		L	- T	- R		L	- T	- R	
Control:	Stop Sign				Stop Sign				Stop Sign				Stop Sign			
Rights:	Include				Include				Include				Include			
Min. Green:	10	10	10		10	10	10		10	10	10		10	10	10	
Lanes:	0	0 0	0 0		1	0 0	0 2		2	0 1	0 0		0	0 1	0 1	
Volume Module:																
Base Vol:	0	0	0		126	0	450		333	313	0		0	306	138	
Growth Adj:	1.00	1.00	1.00		1.00	1.00	1.00		1.00	1.00	1.00		1.00	1.00	1.00	
Initial Bse:	0	0	0		126	0	450		333	313	0		0	306	138	
User Adj:	1.00	1.00	1.00		1.00	1.00	1.00		1.00	1.00	1.00		1.00	1.00	1.00	
PHF Adj:	0.95	0.95	0.95		0.95	0.95	0.95		0.95	0.95	0.95		0.95	0.95	0.95	
PHF Volume:	0	0	0		133	0	474		351	329	0		0	322	145	
Reduct Vol:	0	0	0		0	0	0		0	0	0		0	0	0	
Reduced Vol:	0	0	0		133	0	474		351	329	0		0	322	145	
PCE Adj:	1.00	1.00	1.00		1.00	1.00	1.00		1.00	1.00	1.00		1.00	1.00	1.00	
MLF Adj:	1.00	1.00	1.00		1.00	1.00	1.00		1.00	1.00	1.00		1.00	1.00	1.00	
Final Vol.:	0	0	0		133	0	474		351	329	0		0	322	145	
Saturation Flow Module:																
Adjustment:	1.00	1.00	1.00		1.00	1.00	1.00		1.00	1.00	1.00		1.00	1.00	1.00	
Lanes:	0.00	0.00	0.00		1.00	0.00	2.00		2.00	1.00	0.00		0.00	1.00	1.00	
Final Sat.:	0	0	0		450	0	1061		881	474	0		0	485	527	
Capacity Analysis Module:																
Vol/Sat:	xxxx	xxxx	xxxx	0.29	xxxx		0.45	0.40	0.70	xxxx	xxxx	0.66	0.28			
Crit Moves:							****		****			****				
Delay/Veh:	0.0	0.0	0.0	13.6	0.0		14.2	15.7	25.0	0.0	0.0	22.6	11.6			
Delay Adj:	1.00	1.00	1.00	1.00	1.00		1.00	1.00	1.00	1.00	1.00	1.00	1.00			
AdjDel/Veh:	0.0	0.0	0.0	13.6	0.0		14.2	15.7	25.0	0.0	0.0	22.6	11.6			
LOS by Move:	*	*	*	B	*		B	C	D	*	*	C	B			
ApproachDel:	xxxxxx				14.1				20.2			19.2				
Delay Adj:	xxxxx				1.00				1.00			1.00				
ApprAdjDel:	xxxxxx				14.1				20.2			19.2				
LOS by Appr:	*				B				C			C				
AllWayAvgQ:	0.0	0.0	0.0	0.4	0.0		0.7	0.6	1.9	0.0	0.0	1.7	0.3			

Note: Queue reported is the number of cars per lane.

Church of the Woods
Year 2030 With Project With Alternative Mitigations
Sunday Peak Hour

Level Of Service Computation Report
2000 HCM Unsignalized Method (Base Volume Alternative)

Intersection #8 Bear Springs Road/State Route 18

Average Delay (sec/veh): 2.3 Worst Case Level Of Service: C[21.5]

Approach:	North Bound					South Bound					East Bound					West Bound				
Movement:	L	-	T	-	R	L	-	T	-	R	L	-	T	-	R	L	-	T	-	R
Control:	Stop Sign					Stop Sign					Uncontrolled					Uncontrolled				
Rights:	Include					Include					Include					Include				
Lanes:	0	0	0	0	1	0	0	0	0	1	1	0	0	1	0	1	0	0	1	0
Volume Module:																				
Base Vol:	0	0	54			0	0	134			29	743	23			18	788	65		
Growth Adj:	1.00	1.00	1.00			1.00	1.00	1.00			1.00	1.00	1.00			1.00	1.00	1.00		
Initial Bse:	0	0	54			0	0	134			29	743	23			18	788	65		
User Adj:	1.00	1.00	1.00			1.00	1.00	1.00			1.00	1.00	1.00			1.00	1.00	1.00		
PHF Adj:	0.95	0.95	0.95			0.95	0.95	0.95			0.95	0.95	0.95			0.95	0.95	0.95		
PHF Volume:	0	0	57			0	0	141			31	782	24			19	829	68		
Reduct Vol:	0	0	0			0	0	0			0	0	0			0	0	0		
Final Vol.:	0	0	57			0	0	141			31	782	24			19	829	68		
Critical Gap Module:																				
Critical Gp:	xxxxx	xxxx	6.2			xxxxx	xxxx	6.2			4.1	xxxx	xxxxx			4.1	xxxx	xxxxx		
FollowUpTim:	xxxxx	xxxx	3.3			xxxxx	xxxx	3.3			2.2	xxxx	xxxxx			2.2	xxxx	xxxxx		
Capacity Module:																				
Cnflict Vol:	xxxx	xxxx	794			xxxx	xxxx	864			898	xxxx	xxxxx			806	xxxx	xxxxx		
Potent Cap.:	xxxx	xxxx	391			xxxx	xxxx	357			765	xxxx	xxxxx			827	xxxx	xxxxx		
Move Cap.:	xxxx	xxxx	391			xxxx	xxxx	357			765	xxxx	xxxxx			827	xxxx	xxxxx		
Total Cap:	0	774	xxxxx			0	771	xxxxx			xxxx	xxxx	xxxxx			xxxx	xxxx	xxxxx		
Volume/Cap:	xxxx	xxxx	0.15			xxxx	xxxx	0.40			0.04	xxxx	xxxx			0.02	xxxx	xxxx		
Level Of Service Module:																				
2Way95thQ:	xxxx	xxxx	0.5			xxxx	xxxx	1.8			0.1	xxxx	xxxxx			0.1	xxxx	xxxxx		
Control Del:	xxxxx	xxxx	15.8			xxxxx	xxxx	21.5			9.9	xxxx	xxxxx			9.5	xxxx	xxxxx		
LOS by Move:	*	*	C			*	*	C			A	*	*			A	*	*		
Movement:	LT	-	LTR	-	RT	LT	-	LTR	-	RT	LT	-	LTR	-	RT	LT	-	LTR	-	RT
Shared Cap.:	xxxx	xxxx	xxxxx			xxxx	xxxx	xxxxx			xxxx	xxxx	xxxxx			xxxx	xxxx	xxxxx		
SharedQueue:	xxxxx	xxxx	xxxxx			xxxxx	xxxx	xxxxx			xxxxx	xxxx	xxxxx			xxxxx	xxxx	xxxxx		
Shrd ConDel:	xxxxx	xxxx	xxxxx			xxxxx	xxxx	xxxxx			xxxxx	xxxx	xxxxx			xxxxx	xxxx	xxxxx		
Shared LOS:	*	*	*			*	*	*			*	*	*			*	*	*		
ApproachDel:	15.8					21.5					xxxxxx					xxxxxx				
ApproachLOS:	C					C					*					*				

Note: Queue reported is the number of cars per lane.

Church of the Woods
Year 2030 With Project With Alternative Mitigations
Sunday Peak Hour

Level Of Service Computation Report
2000 HCM 4-Way Stop Method (Base Volume Alternative)

Intersection #13 State Route 173/State Route 18

Cycle (sec):	100	Critical Vol./Cap.(X):	0.897
Loss Time (sec):	0 (Y+R=4.0 sec)	Average Delay (sec/veh):	24.2
Optimal Cycle:	0	Level Of Service:	C

Approach:	North Bound			South Bound			East Bound			West Bound		
Movement:	L -	T -	R	L -	T -	R	L -	T -	R	L -	T -	R
Control:	Stop Sign			Stop Sign			Stop Sign			Stop Sign		
Rights:	Include			Include			Include			Include		
Min. Green:	10	10	10	10	10	10	10	10	10	10	10	10
Lanes:	0 0	0 0	0	0 0	1! 0	0	1 0	1 0	0	0 0	1 0	1
Volume Module:												
Base Vol:	0	0	0	80	0	304	442	235	0	0	242	207
Growth Adj:	1.00	1.00	1.00	1.00	1.00	1.00	1.00	1.00	1.00	1.00	1.00	1.00
Initial Bse:	0	0	0	80	0	304	442	235	0	0	242	207
User Adj:	1.00	1.00	1.00	1.00	1.00	1.00	1.00	1.00	1.00	1.00	1.00	1.00
PHF Adj:	0.95	0.95	0.95	0.95	0.95	0.95	0.95	0.95	0.95	0.95	0.95	0.95
PHF Volume:	0	0	0	84	0	320	465	247	0	0	255	218
Reduct Vol:	0	0	0	0	0	0	0	0	0	0	0	0
Reduced Vol:	0	0	0	84	0	320	465	247	0	0	255	218
PCE Adj:	1.00	1.00	1.00	1.00	1.00	1.00	1.00	1.00	1.00	1.00	1.00	1.00
MLF Adj:	1.00	1.00	1.00	1.00	1.00	1.00	1.00	1.00	1.00	1.00	1.00	1.00
Final Vol.:	0	0	0	84	0	320	465	247	0	0	255	218
Saturation Flow Module:												
Adjustment:	1.00	1.00	1.00	1.00	1.00	1.00	1.00	1.00	1.00	1.00	1.00	1.00
Lanes:	0.00	0.00	0.00	0.21	0.00	0.79	1.00	1.00	0.00	0.00	1.00	1.00
Final Sat.:	0	0	0	124	0	472	519	556	0	0	519	577
Capacity Analysis Module:												
Vol/Sat:	xxxx	xxxx	xxxx	0.68	xxxx	0.68	0.90	0.44	xxxx	xxxx	0.49	0.38
Crit Moves:				****			****				****	
Delay/Veh:	0.0	0.0	0.0	19.7	0.0	19.7	43.7	14.1	0.0	0.0	15.6	12.3
Delay Adj:	1.00	1.00	1.00	1.00	1.00	1.00	1.00	1.00	1.00	1.00	1.00	1.00
AdjDel/Veh:	0.0	0.0	0.0	19.7	0.0	19.7	43.7	14.1	0.0	0.0	15.6	12.3
LOS by Move:	*	*	*	C	*	C	E	B	*	*	C	B
ApproachDel:	xxxxxx			19.7			33.4			14.0		
Delay Adj:	xxxxx			1.00			1.00			1.00		
ApprAdjDel:	xxxxxx			19.7			33.4			14.0		
LOS by Appr:	*			C			D			B		
AllWayAvgQ:	0.0	0.0	0.0	1.8	1.8	1.8	4.9	0.8	0.0	0.0	0.9	0.6

Note: Queue reported is the number of cars per lane.

OPENING YEAR (2009) WITH PROJECT WITH IMPROVEMENTS CONDITIONS ROUNDABOUT ALTERNATIVE

SIDRA INTERSECTION

Movement Summary

SR18, SR189, Lake Gregory Road

2009 Sat Peak West Roundabout - Base + Project

Roundabout

Vehicle Movements

Mov ID	Turn	Dem Flow (veh/h)	%HV	Deg of Satn (v/c)	Aver Delay (sec)	Level of Service	95% Back of Queue (ft)	Prop. Queued	Eff. Stop Rate	Aver Speed (mph)
SR18 East										
6T	T	562	0.0	0.307	8.3	LOS A	51	0.49	0.65	31.4
6R	R	194	0.0	0.320	8.0	LOS A	30	0.37	0.60	31.6
Approach		756	0.0	0.319	8.2	LOS A	51	0.46	0.63	31.4
SR189										
17L	L	70	0.0	0.174	17.2	LOS B	22	0.62	0.91	27.1
14T	T	23	0.0	0.174	10.6	LOS B	22	0.62	0.82	30.5
14R	R	105	0.0	0.153	8.4	LOS A	15	0.36	0.62	31.6
Approach		198	0.0	0.174	11.8	LOS B	22	0.48	0.74	29.6
Lake Gregory Road										
7L	L	413	0.0	0.866	27.8	LOS C	293	0.93	1.26	22.5
4R	R	99	0.0	0.868	22.8	LOS C	293	0.93	1.25	23.9
Approach		512	0.0	0.866	26.8	LOS C	293	0.93	1.26	22.7
SR18 West										
5L	L	151	0.0	0.237	15.6	LOS B	44	0.70	0.83	27.8
Approach		151	0.0	0.237	15.6	LOS B	44	0.70	0.83	27.8
All Vehicles		1617	0.0	0.868	15.2	LOS B	293	0.63	0.86	27.5

Symbols which may appear in this table:

Following Degree of Saturation
x = 1.00 for Short Lane with resulting Excess Flow
* x = 1.00 due to minimum capacity

Following LOS
- Based on density for continuous movements

Following Queue
- Density for continuous movement

SIDRA SOLUTIONS

Site: 2009 Sat - Base + Project
R:\CTW430\May 2008\Sidra\Roundabout - 2009.aap
Processed Jun 26, 2008 03:34:21PM

A1852, LSA Associates, Inc., Large Office
Produced by SIDRA Intersection 3.2.0.1455
Copyright 2000-2007 Akcelik and Associates Pty Ltd
www.sidrasolutions.com

Input Volumes

Total flow rates as given by the user (veh/60 min)

SR18, SR189, Lake Gregory Road

2009 Sat Peak West Roundabout - Base + Project

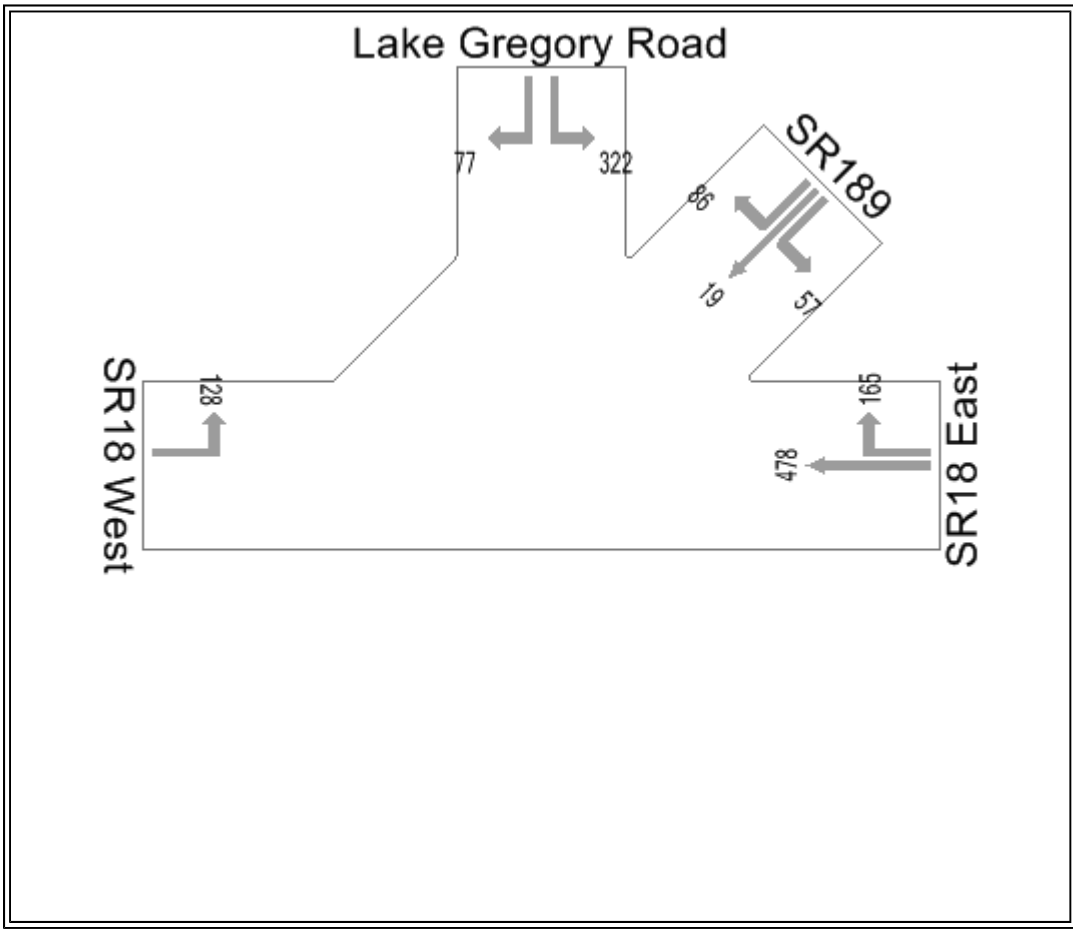

Intersection Type

Roundabout

No color code in this display

SIDRA SOLUTIONS

Site: 2009 Sat - Base + Project
R:\CTW430\May 2008\Sidra\Roundabout - 2009.aap
Processed Jun 26, 2008 03:34:21PM

A1852, LSA Associates, Inc., Large Office
Produced by SIDRA Intersection 3.2.0.1455
Copyright 2000-2007 Akcelik and Associates Pty Ltd
www.sidrasolutions.com

SIDRA INTERSECTION

Control Delay (Average)

Average control delay per vehicle (seconds)

SR18, SR189, Lake Gregory Road

2009 Sat Peak West Roundabout - Base + Project

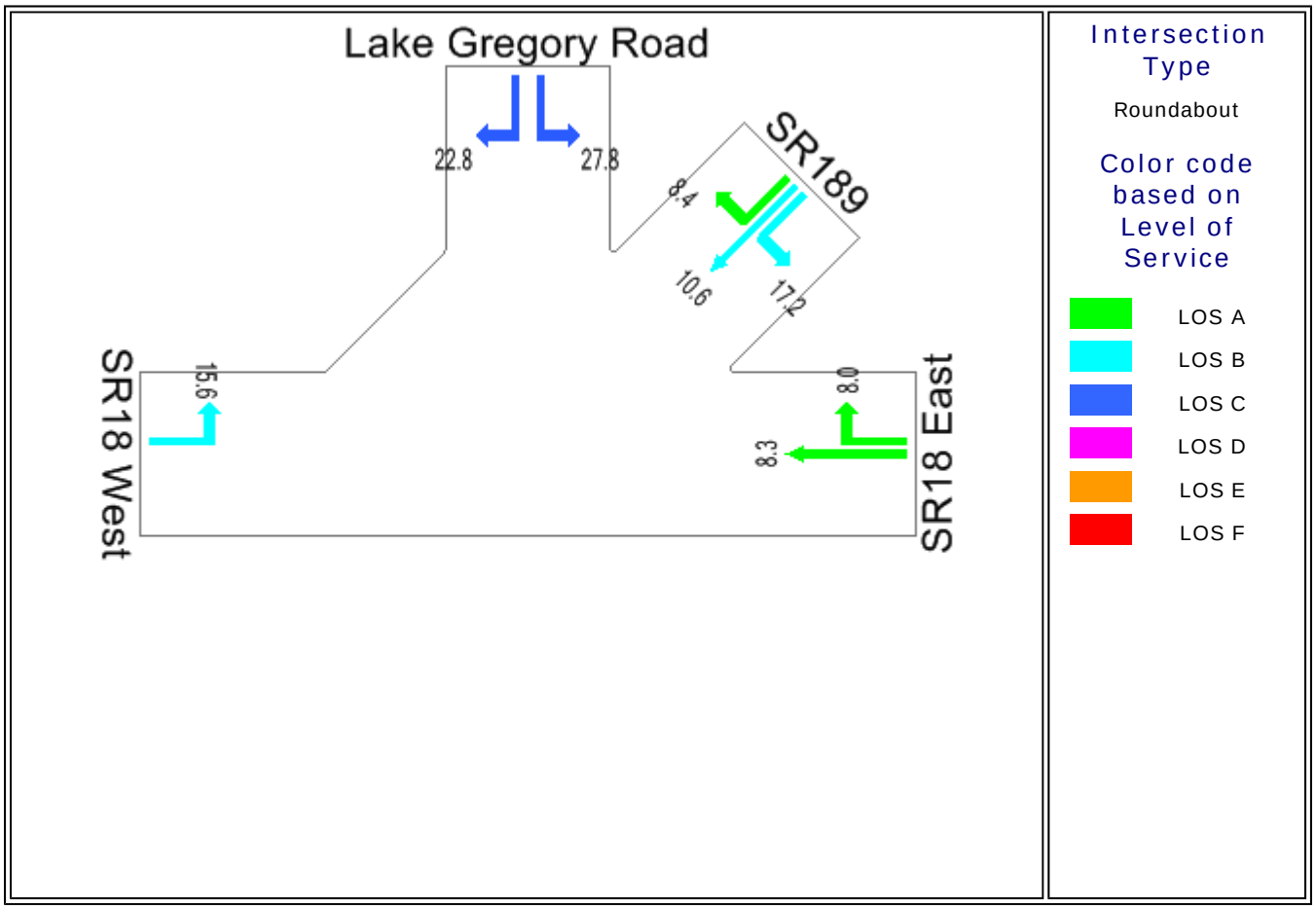

SIDRA SOLUTIONS

Site: 2009 Sat - Base + Project
R:\CTW430\May 2008\Sidra\Roundabout - 2009.aap
Processed Jun 26, 2008 03:34:21PM

A1852, LSA Associates, Inc., Large Office
Produced by SIDRA Intersection 3.2.0.1455
Copyright 2000-2007 Akcelik and Associates Pty Ltd
www.sidrasolutions.com

SIDRA INTERSECTION

Level of Service

Based on Delay (HCM method)

SR18, SR189, Lake Gregory Road

2009 Sat Peak West Roundabout - Base + Project

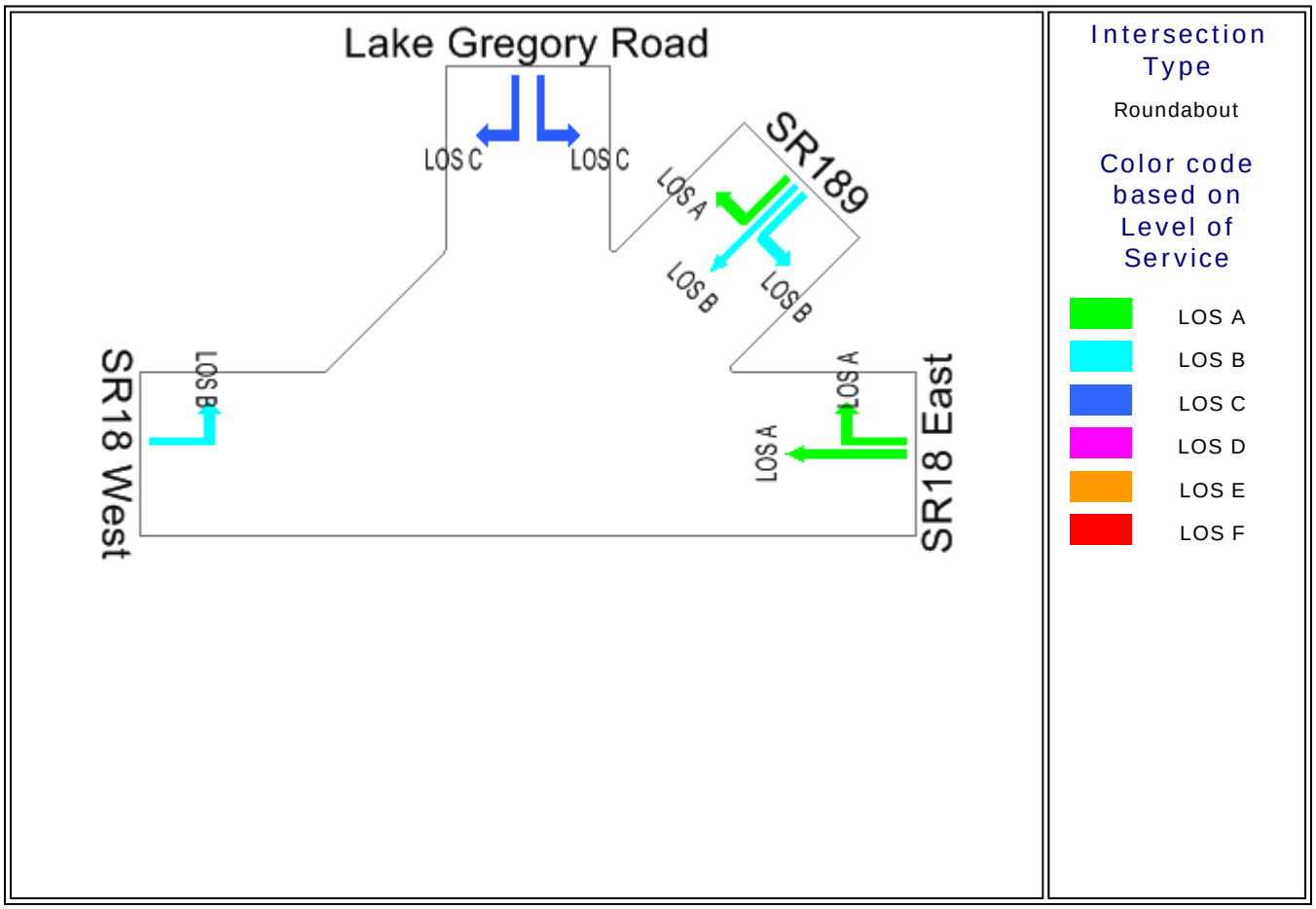

SIDRA SOLUTIONS

Site: 2009 Sat - Base + Project
R:\CTW430\May 2008\Sidra\Roundabout - 2009.aap
Processed Jun 26, 2008 03:34:21PM

A1852, LSA Associates, Inc., Large Office
Produced by SIDRA Intersection 3.2.0.1455
Copyright 2000-2007 Akcelik and Associates Pty Ltd
www.sidrasolutions.com

SIDRA INTERSECTION

Movement Summary

SR 18 and Daley Canyon

2009 Sat Peak East Roundabout - Base + Project

Roundabout

Vehicle Movements

Mov ID	Turn	Dem Flow (veh/h)	%HV	Deg of Satn (v/c)	Aver Delay (sec)	Level of Service	95% Back of Queue (ft)	Prop. Queued	Eff. Stop Rate	Aver Speed (mph)
East SR 18										
6T	T	384	0.0	0.526	11.5	LOS B	127	0.76	0.84	29.9
6R	R	188	0.0	0.258	10.1	LOS B	47	0.62	0.73	30.7
Approach		572	0.0	0.526	11.0	LOS B	127	0.71	0.80	30.2
Daley Canyon										
7L	L	216	0.0	0.302	15.2	LOS B	58	0.66	0.81	28.0
4R	R	416	0.0	0.258	7.0	LOS A#	10#	0.00	0.56	33.2
Approach		632	0.0	0.302	9.8	LOS A	58	0.23	0.65	31.2
West SR 18										
5L	L	381	0.0	0.425	14.0	LOS B	94	0.58	0.74	28.5
2T	T	534	0.0	0.281	6.6	LOS B#	13#	0.00	0.53	33.5
Approach		915	0.0	0.425	9.6	LOS A	94	0.24	0.62	31.2
All Vehicles		2119	0.0	0.526	10.1	LOS B	127	0.36	0.68	30.9

Symbols which may appear in this table:

Following Degree of Saturation
x = 1.00 for Short Lane with resulting Excess Flow
* x = 1.00 due to minimum capacity

Following LOS
- Based on density for continuous movements

Following Queue
- Density for continuous movement

SIDRA SOLUTIONS

Site: 2009 Sat Peak - Base + Project
R:\CTW430\May 2008\Sidra\East Roundabout - 2009.aap
Processed Jun 26, 2008 03:35:15PM

A1852, LSA Associates, Inc., Large Office
Produced by SIDRA Intersection 3.2.0.1455
Copyright 2000-2007 Akcelik and Associates Pty Ltd
www.sidrasolutions.com

Input Volumes

Total flow rates as given by the user (veh/60 min)

SR 18 and Daley Canyon

2009 Sat Peak East Roundabout - Base + Project

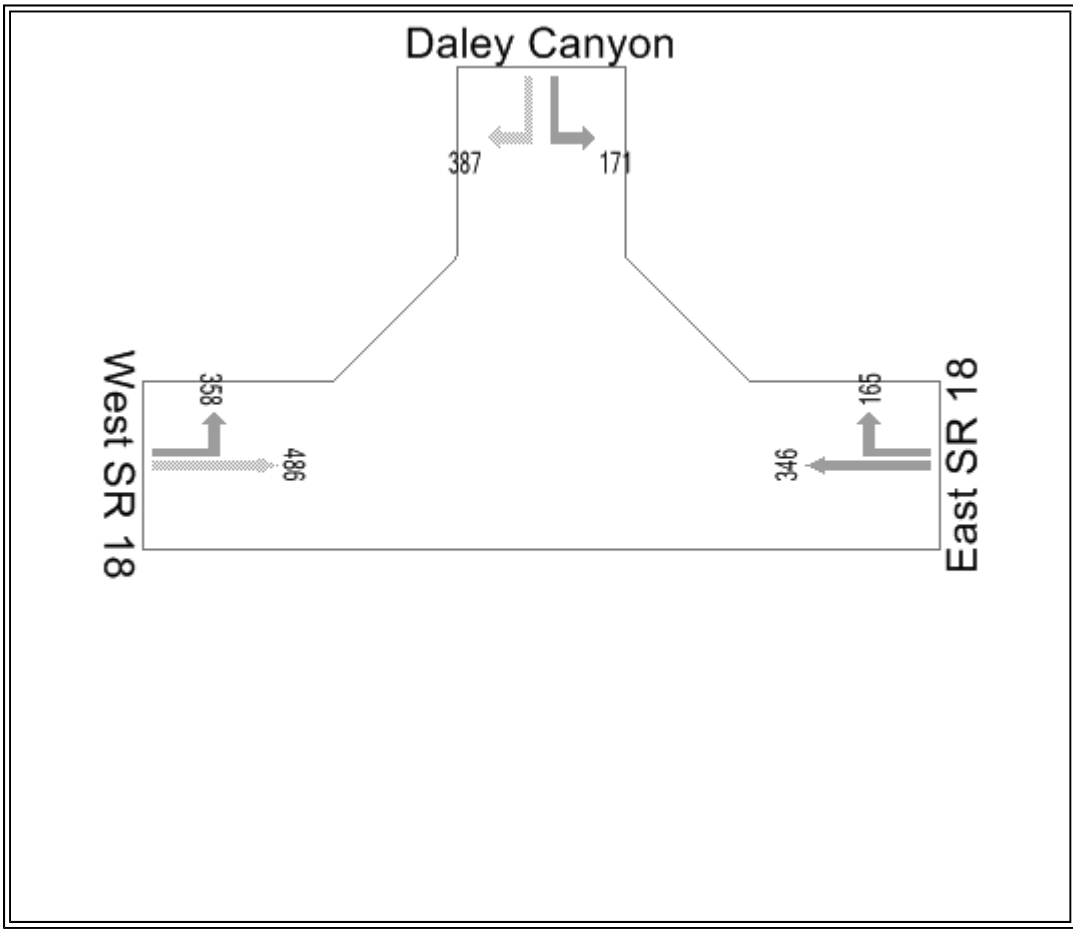

Intersection Type

Roundabout

No color code in this display

Site: 2009 Sat Peak - Base + Project
R:\CTW430\May 2008\Sidra\East Roundabout - 2009.aap
Processed Jun 26, 2008 03:35:15PM

A1852, LSA Associates, Inc., Large Office
Produced by SIDRA Intersection 3.2.0.1455
Copyright 2000-2007 Akcelik and Associates Pty Ltd
www.sidrasolutions.com

SIDRA INTERSECTION

Control Delay (Average)

Average control delay per vehicle (seconds)

SR 18 and Daley Canyon

2009 Sat Peak East Roundabout - Base + Project

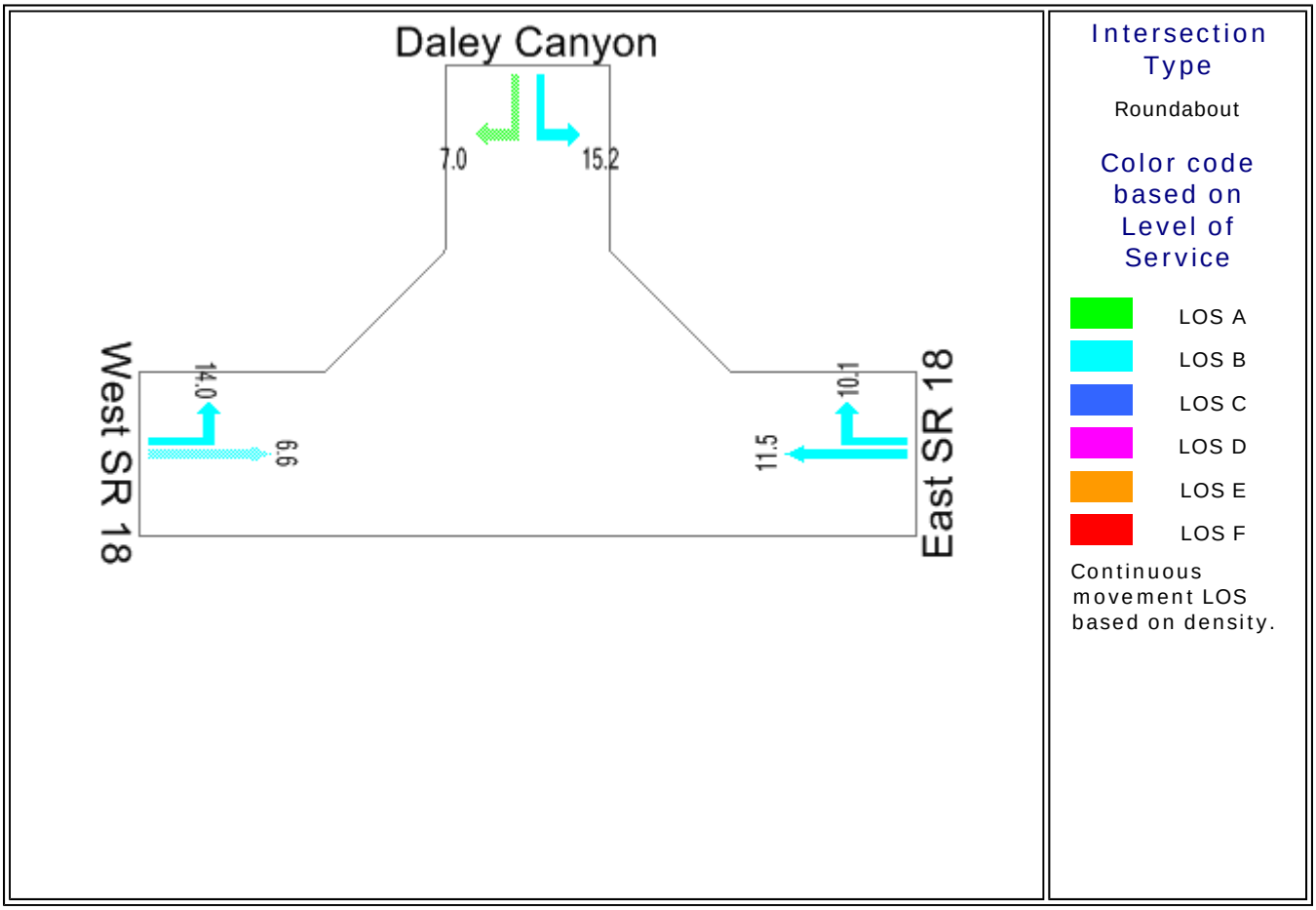

SIDRA SOLUTIONS

Site: 2009 Sat Peak - Base + Project
R:\CTW430\May 2008\Sidra\East Roundabout - 2009.aap
Processed Jun 26, 2008 03:35:15PM

A1852, LSA Associates, Inc., Large Office
Produced by SIDRA Intersection 3.2.0.1455
Copyright 2000-2007 Akcelik and Associates Pty Ltd
www.sidrasolutions.com

SIDRA INTERSECTION

Level of Service

Based on Delay (HCM method)

SR 18 and Daley Canyon

2009 Sat Peak East Roundabout - Base + Project

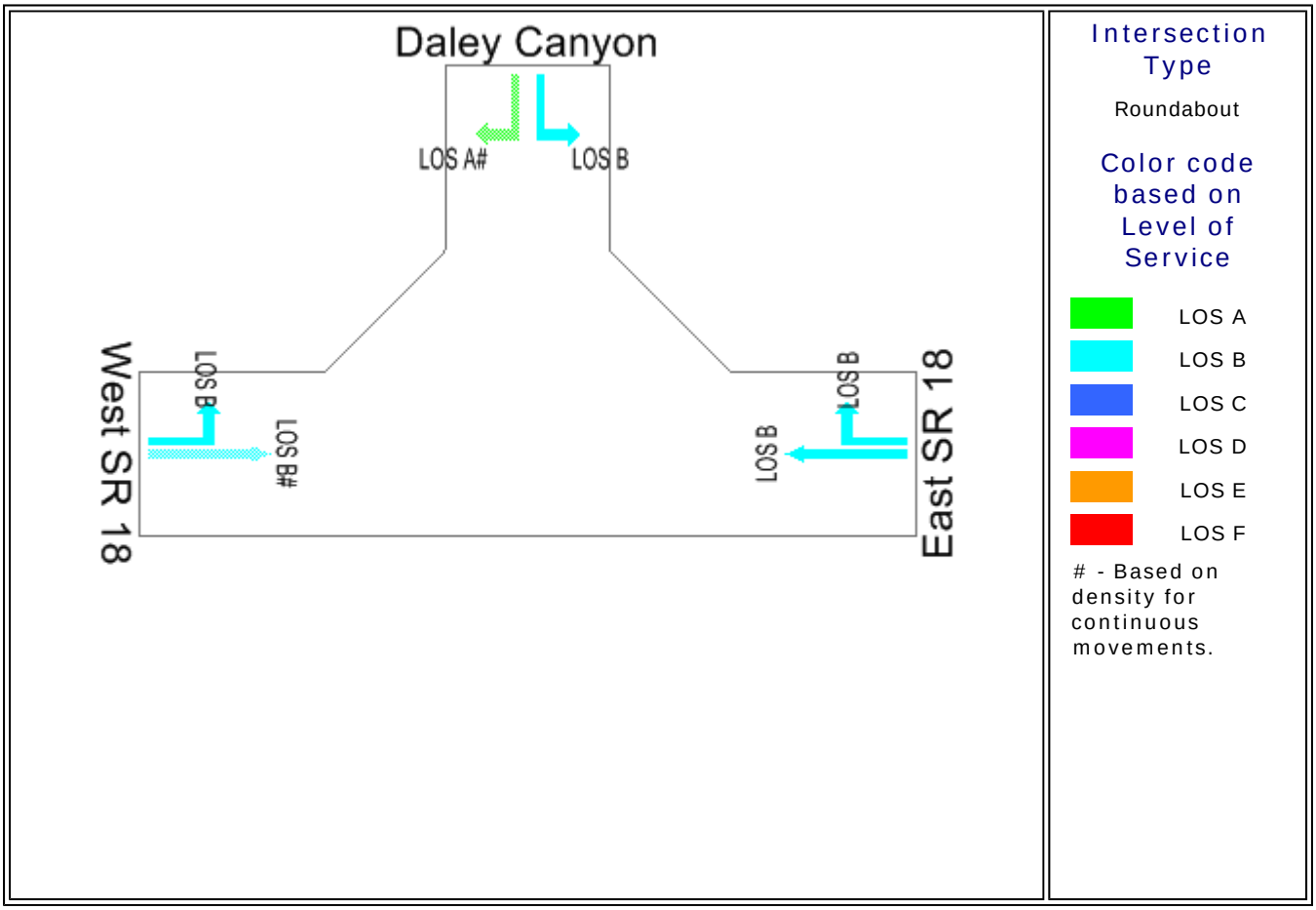

SIDRA SOLUTIONS

Site: 2009 Sat Peak - Base + Project
R:\CTW430\May 2008\Sidra\East Roundabout - 2009.aap
Processed Jun 26, 2008 03:35:15PM

A1852, LSA Associates, Inc., Large Office
Produced by SIDRA Intersection 3.2.0.1455
Copyright 2000-2007 Akcelik and Associates Pty Ltd
www.sidrasolutions.com

SIDRA INTERSECTION

Movement Summary

SR18, SR189, Lake Gregory Road

2009 Sunday Peak West Roundabout - Base + Project

Roundabout

Vehicle Movements

Mov ID	Turn	Dem Flow (veh/h)	%HV	Deg of Satn (v/c)	Aver Delay (sec)	Level of Service	95% Back of Queue (ft)	Prop. Queued	Eff. Stop Rate	Aver Speed (mph)
SR18 East										
6T	T	667	0.0	0.316	7.5	LOS A	55	0.38	0.57	31.9
6R	R	201	0.0	0.317	7.7	LOS A	29	0.33	0.56	31.7
Approach		868	0.0	0.317	7.5	LOS A	55	0.37	0.57	31.8
SR189										
17L	L	132	0.0	0.449	19.4	LOS B	69	0.71	0.97	26.0
14T	T	103	0.0	0.448	12.8	LOS B	69	0.71	0.91	29.1
14R	R	114	0.0	0.160	8.1	LOS A	15	0.32	0.60	31.7
Approach		349	0.0	0.449	13.8	LOS B	69	0.58	0.83	28.5
Lake Gregory Road										
7L	L	268	0.0	0.777	26.4	LOS C	196	0.87	1.17	23.0
4R	R	133	0.0	0.778	21.3	LOS C	196	0.87	1.15	24.6
Approach		401	0.0	0.778	24.7	LOS C	196	0.87	1.16	23.5
SR18 West										
5L	L	63	0.0	0.092	14.3	LOS B	13	0.52	0.76	28.5
Approach		63	0.0	0.092	14.3	LOS B	13	0.52	0.76	28.5
All Vehicles		1681	0.0	0.778	13.2	LOS B	196	0.54	0.77	28.6

Symbols which may appear in this table:

Following Degree of Saturation
x = 1.00 for Short Lane with resulting Excess Flow
* x = 1.00 due to minimum capacity

Following LOS
- Based on density for continuous movements

Following Queue
- Density for continuous movement

SIDRA SOLUTIONS

Site: 2009 Sun - Base + Project
R:\CTW430\May 2008\Sidra\Roundabout - 2009.aap
Processed Jun 26, 2008 03:34:21PM

A1852, LSA Associates, Inc., Large Office
Produced by SIDRA Intersection 3.2.0.1455
Copyright 2000-2007 Akcelik and Associates Pty Ltd
www.sidrasolutions.com

Input Volumes

Total flow rates as given by the user (veh/60 min)

SR18, SR189, Lake Gregory Road

2009 Sunday Peak West Roundabout - Base + Project

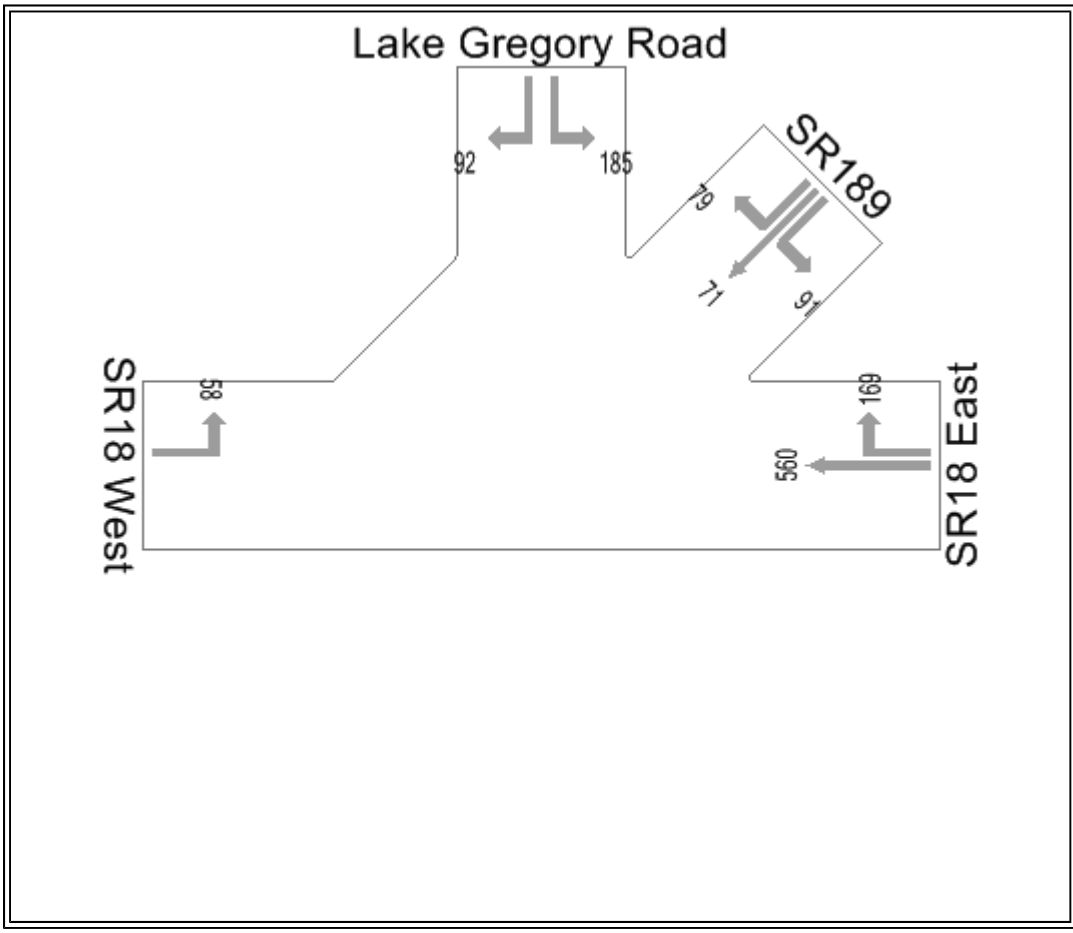

Intersection Type

Roundabout

No color code in this display

Site: 2009 Sun - Base + Project
R:\CTW430\May 2008\Sidra\Roundabout - 2009.aap
Processed Jun 26, 2008 03:34:21PM

A1852, LSA Associates, Inc., Large Office
Produced by SIDRA Intersection 3.2.0.1455
Copyright 2000-2007 Akcelik and Associates Pty Ltd
www.sidrasolutions.com

SIDRA INTERSECTION

Control Delay (Average)

Average control delay per vehicle (seconds)

SR18, SR189, Lake Gregory Road

2009 Sunday Peak West Roundabout - Base + Project

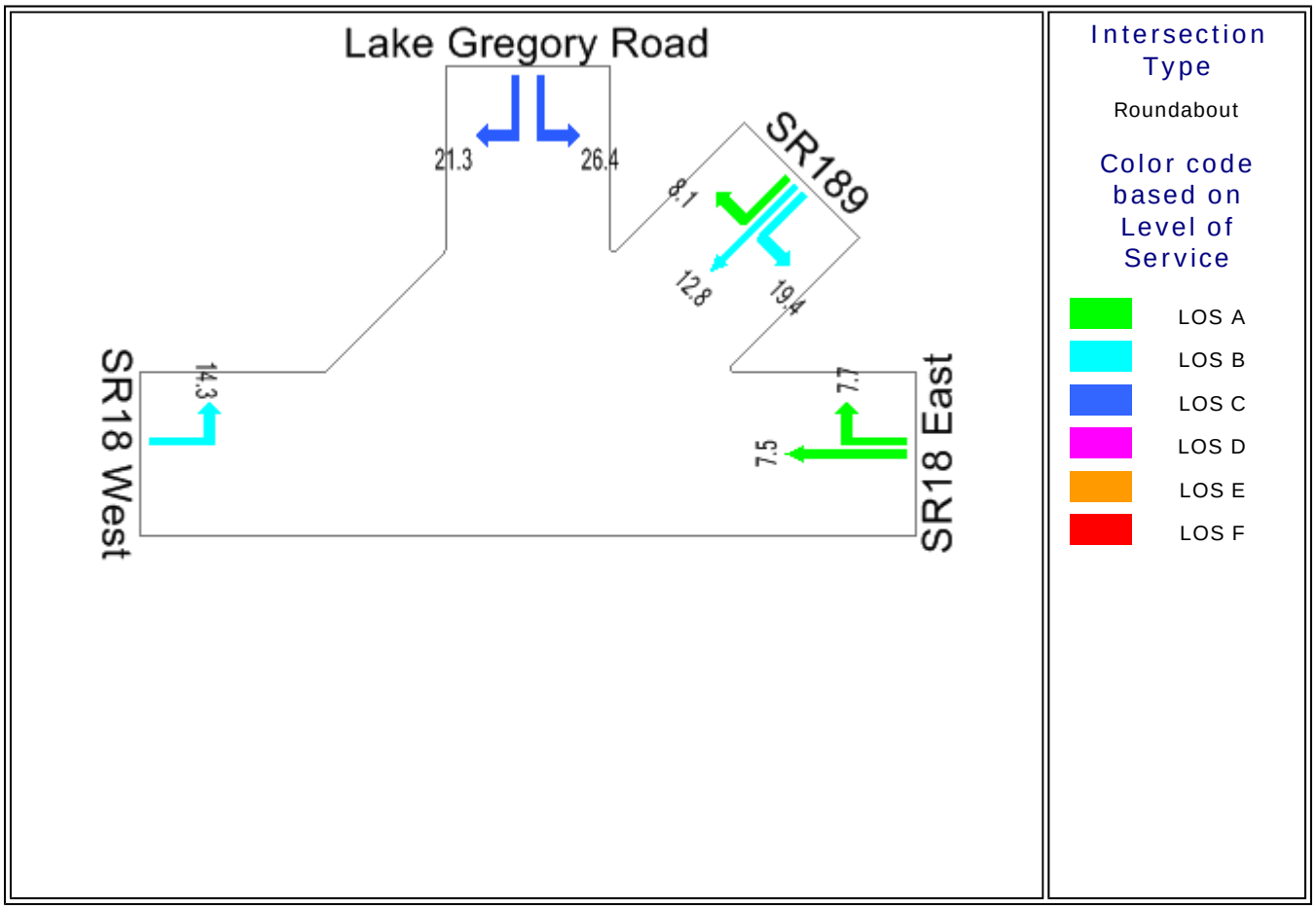

SIDRA SOLUTIONS

Site: 2009 Sun - Base + Project
R:\CTW430\May 2008\Sidra\Roundabout - 2009.aap
Processed Jun 26, 2008 03:34:21PM

A1852, LSA Associates, Inc., Large Office
Produced by SIDRA Intersection 3.2.0.1455
Copyright 2000-2007 Akcelik and Associates Pty Ltd
www.sidrasolutions.com

SIDRA INTERSECTION

Level of Service

Based on Delay (HCM method)

SR18, SR189, Lake Gregory Road

2009 Sunday Peak West Roundabout - Base + Project

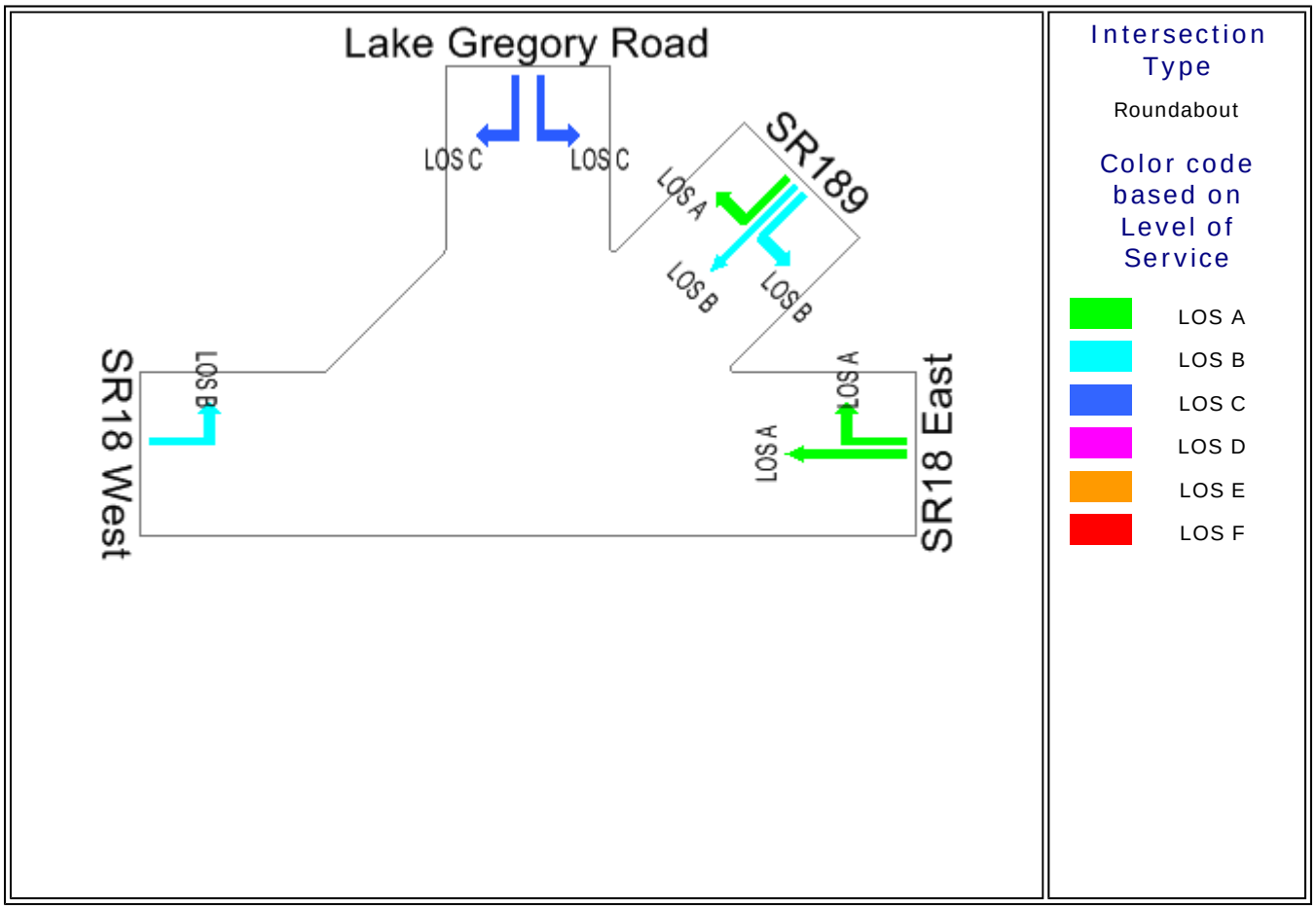

SIDRA SOLUTIONS

Site: 2009 Sun - Base + Project
R:\CTW430\May 2008\Sidra\Roundabout - 2009.aap
Processed Jun 26, 2008 03:34:21PM

A1852, LSA Associates, Inc., Large Office
Produced by SIDRA Intersection 3.2.0.1455
Copyright 2000-2007 Akcelik and Associates Pty Ltd
www.sidrasolutions.com

SIDRA INTERSECTION

Movement Summary

SR 18 and Daley Canyon

2009 Sun Peak East Roundabout - Base + Project

Roundabout

Vehicle Movements

Mov ID	Turn	Dem Flow (veh/h)	%HV	Deg of Satn (v/c)	Aver Delay (sec)	Level of Service	95% Back of Queue (ft)	Prop. Queued	Eff. Stop Rate	Aver Speed (mph)
East SR 18										
6T	T	384	0.0	0.503	10.4	LOS B	117	0.72	0.78	30.5
6R	R	287	0.0	0.376	10.0	LOS B	76	0.65	0.74	30.6
Approach		671	0.0	0.503	10.3	LOS B	117	0.69	0.76	30.5
Daley Canyon										
7L	L	310	0.0	0.432	15.6	LOS B	90	0.72	0.84	27.8
4R	R	579	0.0	0.359	7.0	LOS B#	15#	0.00	0.56	33.2
Approach		889	0.0	0.432	10.0	LOS A	90	0.25	0.66	31.0
West SR 18										
5L	L	334	0.0	0.429	14.9	LOS B	91	0.67	0.80	28.1
2T	T	366	0.0	0.193	6.5	LOS A#	9#	0.00	0.53	33.5
Approach		700	0.0	0.429	10.5	LOS B	91	0.32	0.66	30.7
All Vehicles		2260	0.0	0.503	10.2	LOS B	117	0.40	0.69	30.8

Symbols which may appear in this table:

Following Degree of Saturation
x = 1.00 for Short Lane with resulting Excess Flow
* x = 1.00 due to minimum capacity

Following LOS
- Based on density for continuous movements

Following Queue
- Density for continuous movement

SIDRA SOLUTIONS

Site: 2009 Sun Peak - Base + Project
R:\CTW430\May 2008\Sidra\East Roundabout - 2009.aap
Processed Jun 26, 2008 03:35:15PM

A1852, LSA Associates, Inc., Large Office
Produced by SIDRA Intersection 3.2.0.1455
Copyright 2000-2007 Akcelik and Associates Pty Ltd
www.sidrasolutions.com

Input Volumes

Total flow rates as given by the user (veh/60 min)

SR 18 and Daley Canyon

2009 Sun Peak East Roundabout - Base + Project

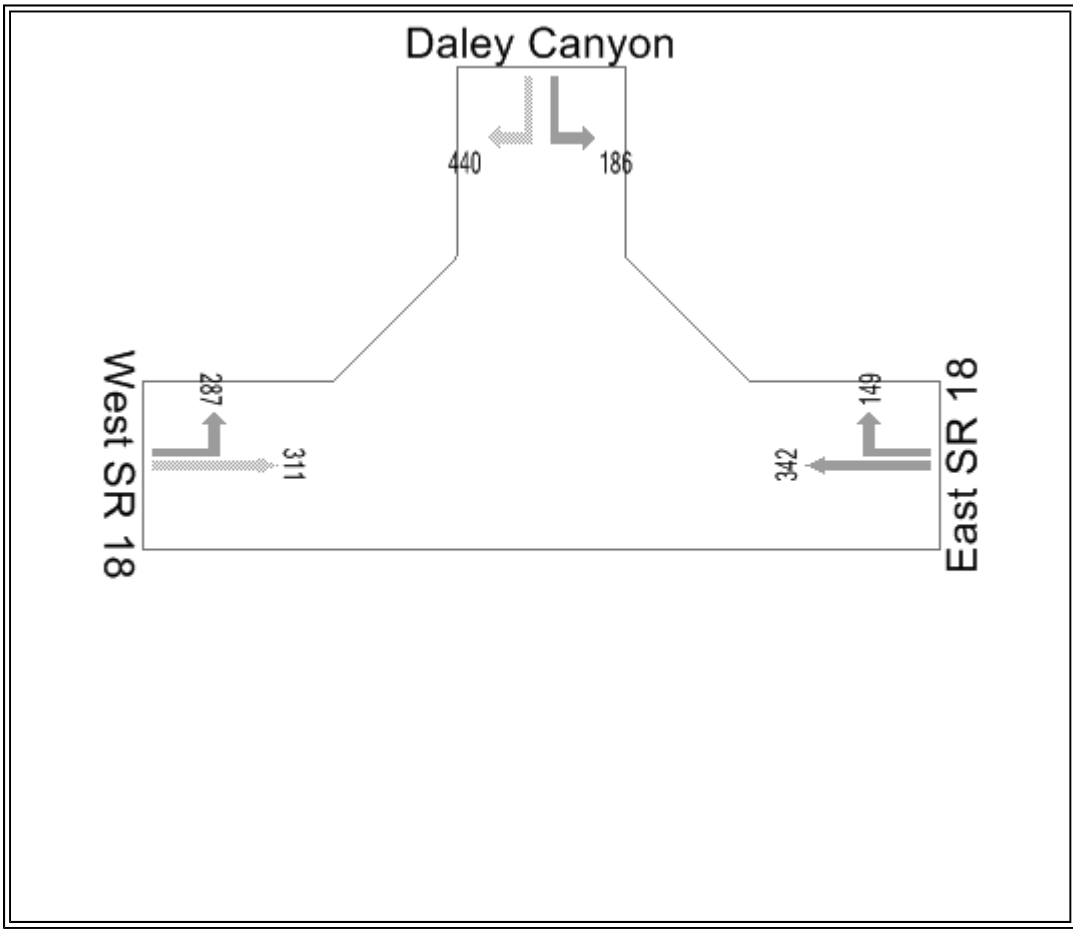

Intersection Type

Roundabout

No color code in this display

Site: 2009 Sun Peak - Base + Project
R:\CTW430\May 2008\Sidra\East Roundabout - 2009.aap
Processed Jun 26, 2008 03:35:15PM

A1852, LSA Associates, Inc., Large Office
Produced by SIDRA Intersection 3.2.0.1455
Copyright 2000-2007 Akcelik and Associates Pty Ltd
www.sidrasolutions.com

SIDRA INTERSECTION

Control Delay (Average)

Average control delay per vehicle (seconds)

SR 18 and Daley Canyon

2009 Sun Peak East Roundabout - Base + Project

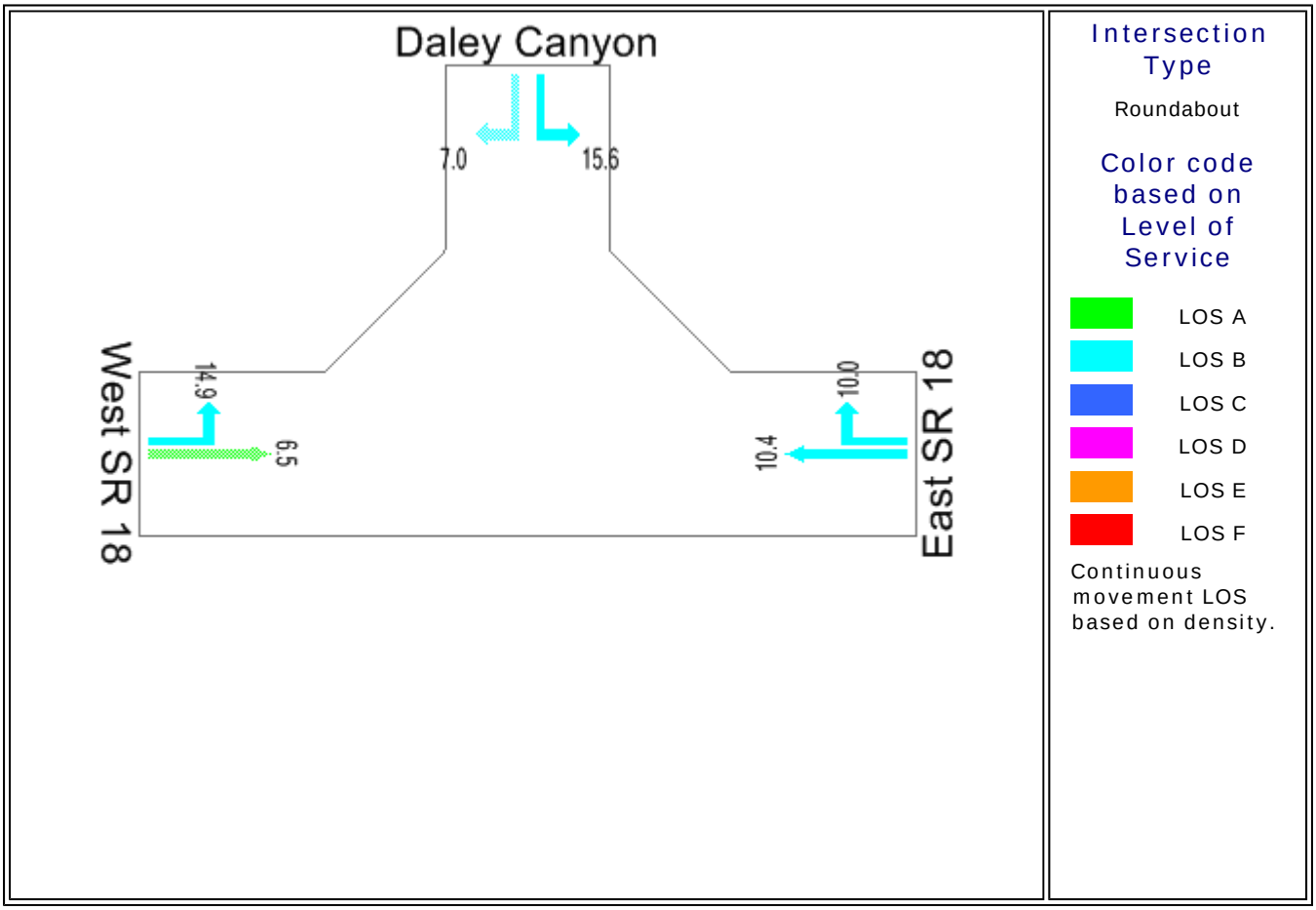

SIDRA SOLUTIONS

Site: 2009 Sun Peak - Base + Project
R:\CTW430\May 2008\Sidra\East Roundabout - 2009.aap
Processed Jun 26, 2008 03:35:15PM

A1852, LSA Associates, Inc., Large Office
Produced by SIDRA Intersection 3.2.0.1455
Copyright 2000-2007 Akcelik and Associates Pty Ltd
www.sidrasolutions.com

SIDRA INTERSECTION

Level of Service

Based on Delay (HCM method)

SR 18 and Daley Canyon

2009 Sun Peak East Roundabout - Base + Project

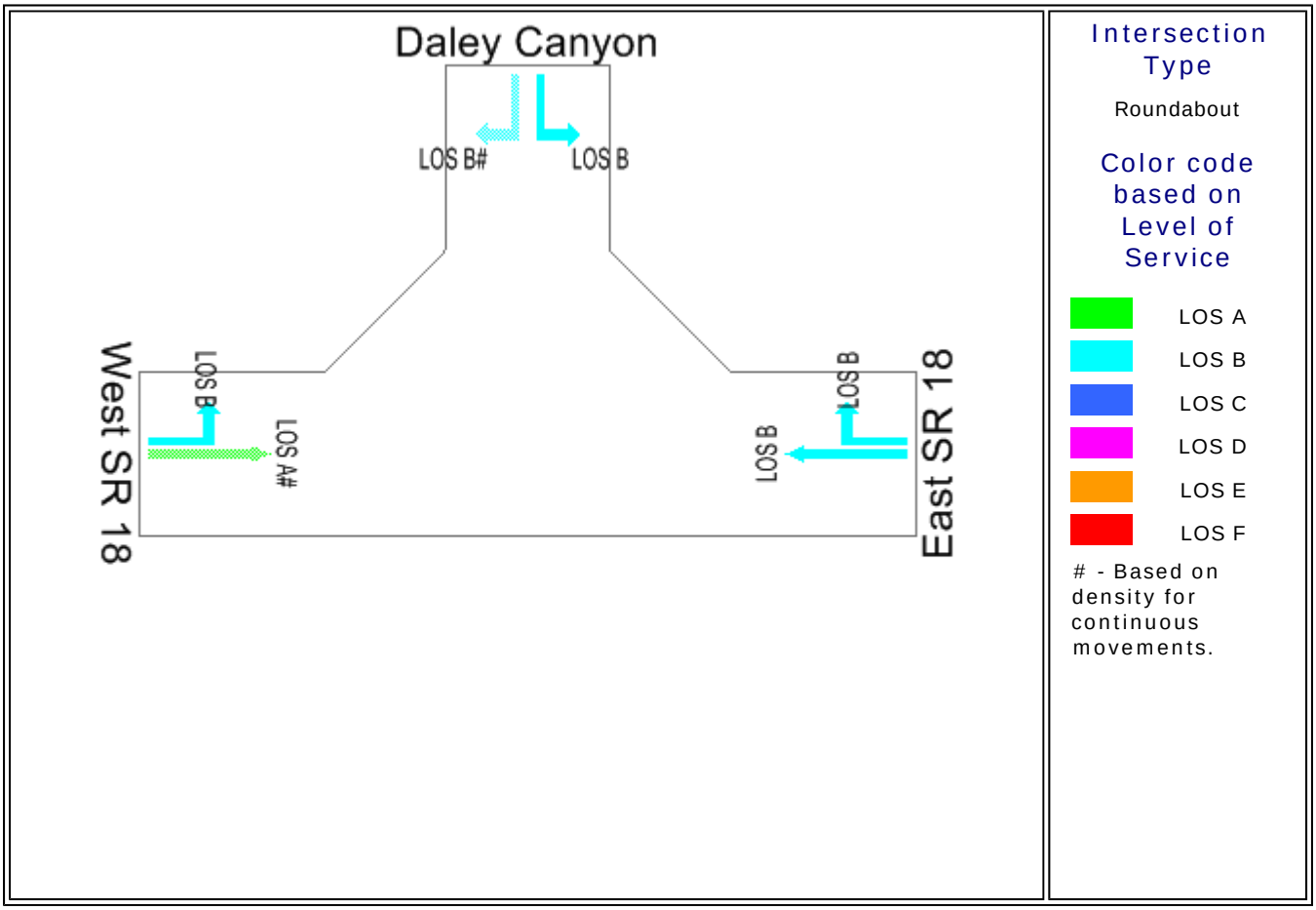

SIDRA SOLUTIONS

Site: 2009 Sun Peak - Base + Project
R:\CTW430\May 2008\Sidra\East Roundabout - 2009.aap
Processed Jun 26, 2008 03:35:15PM

A1852, LSA Associates, Inc., Large Office
Produced by SIDRA Intersection 3.2.0.1455
Copyright 2000-2007 Akcelik and Associates Pty Ltd
www.sidrasolutions.com

YEAR 2013 WITH PROJECT WITH IMPROVEMENTS CONDITIONS ROUNDABOUT ALTERNATIVE

SIDRA INTERSECTION

Movement Summary

SR18, SR189, Lake Gregory Road

2013 Sat Peak West Roundabout - Base + Project

Roundabout

Vehicle Movements

Mov ID	Turn	Dem Flow (veh/h)	%HV	Deg of Satn (v/c)	Aver Delay (sec)	Level of Service	95% Back of Queue (ft)	Prop. Queued	Eff. Stop Rate	Aver Speed (mph)
SR18 East										
6T	T	569	0.0	0.315	8.4	LOS A	54	0.51	0.66	31.3
6R	R	196	0.0	0.329	8.1	LOS A	32	0.39	0.61	31.5
Approach		765	0.0	0.329	8.3	LOS A	54	0.48	0.64	31.4
SR189										
17L	L	83	0.0	0.209	17.3	LOS B	27	0.63	0.91	27.0
14T	T	28	0.0	0.209	10.7	LOS B	27	0.63	0.82	30.4
14R	R	125	0.0	0.181	8.3	LOS A	18	0.36	0.62	31.6
Approach		236	0.0	0.208	11.8	LOS B	27	0.49	0.75	29.6
Lake Gregory Road										
7L	L	467	0.0	0.998	56.2	LOS E	652	1.00	1.90	15.5
4R	R	112	0.0	1.000	51.1	LOS D	652	1.00	1.90	16.0
Approach		579	0.0	0.997	55.2	LOS E	652	1.00	1.90	15.6
SR18 West										
5L	L	142	0.0	0.244	16.2	LOS B	46	0.74	0.86	27.4
Approach		142	0.0	0.244	16.2	LOS B	46	0.74	0.86	27.4
All Vehicles		1722	0.0	1.000	25.2	LOS C	652	0.68	1.10	23.0

Symbols which may appear in this table:

Following Degree of Saturation
x = 1.00 for Short Lane with resulting Excess Flow
* x = 1.00 due to minimum capacity

Following LOS
- Based on density for continuous movements

Following Queue
- Density for continuous movement

SIDRA SOLUTIONS

Site: 2013 Sat - Base + Project
R:\CTW430\May 2008\Sidra\Roundabout - 2013.aap
Processed Jun 26, 2008 04:04:31PM

A1852, LSA Associates, Inc., Large Office
Produced by SIDRA Intersection 3.2.0.1455
Copyright 2000-2007 Akcelik and Associates Pty Ltd
www.sidrasolutions.com

Input Volumes

Total flow rates as given by the user (veh/60 min)

SR18, SR189, Lake Gregory Road

2013 Sat Peak West Roundabout - Base + Project

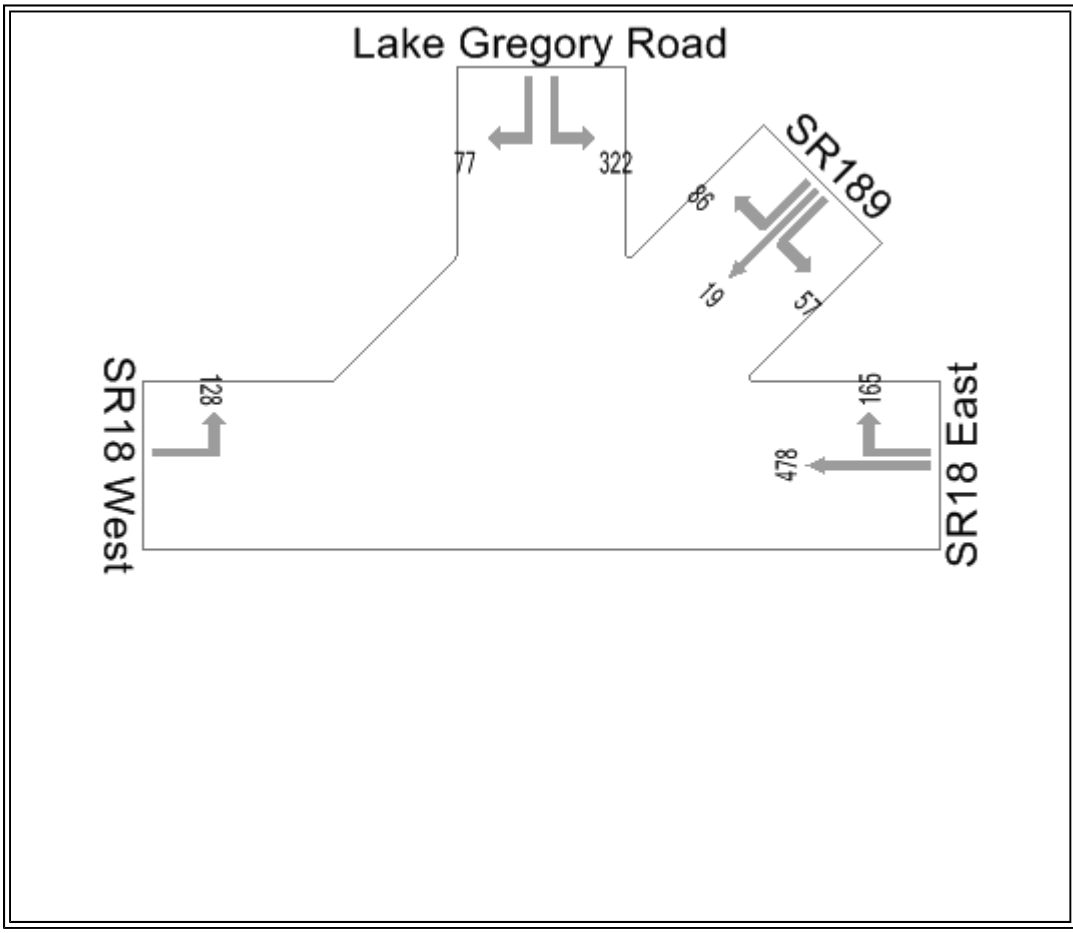

Intersection Type

Roundabout

No color code in this display

SIDRA SOLUTIONS

Site: 2013 Sat - Base + Project
R:\CTW430\May 2008\Sidra\Roundabout - 2013.aap
Processed Jun 26, 2008 04:04:31PM

A1852, LSA Associates, Inc., Large Office
Produced by SIDRA Intersection 3.2.0.1455
Copyright 2000-2007 Akcelik and Associates Pty Ltd
www.sidrasolutions.com

SIDRA INTERSECTION

Control Delay (Average)

Average control delay per vehicle (seconds)

SR18, SR189, Lake Gregory Road

2013 Sat Peak West Roundabout - Base + Project

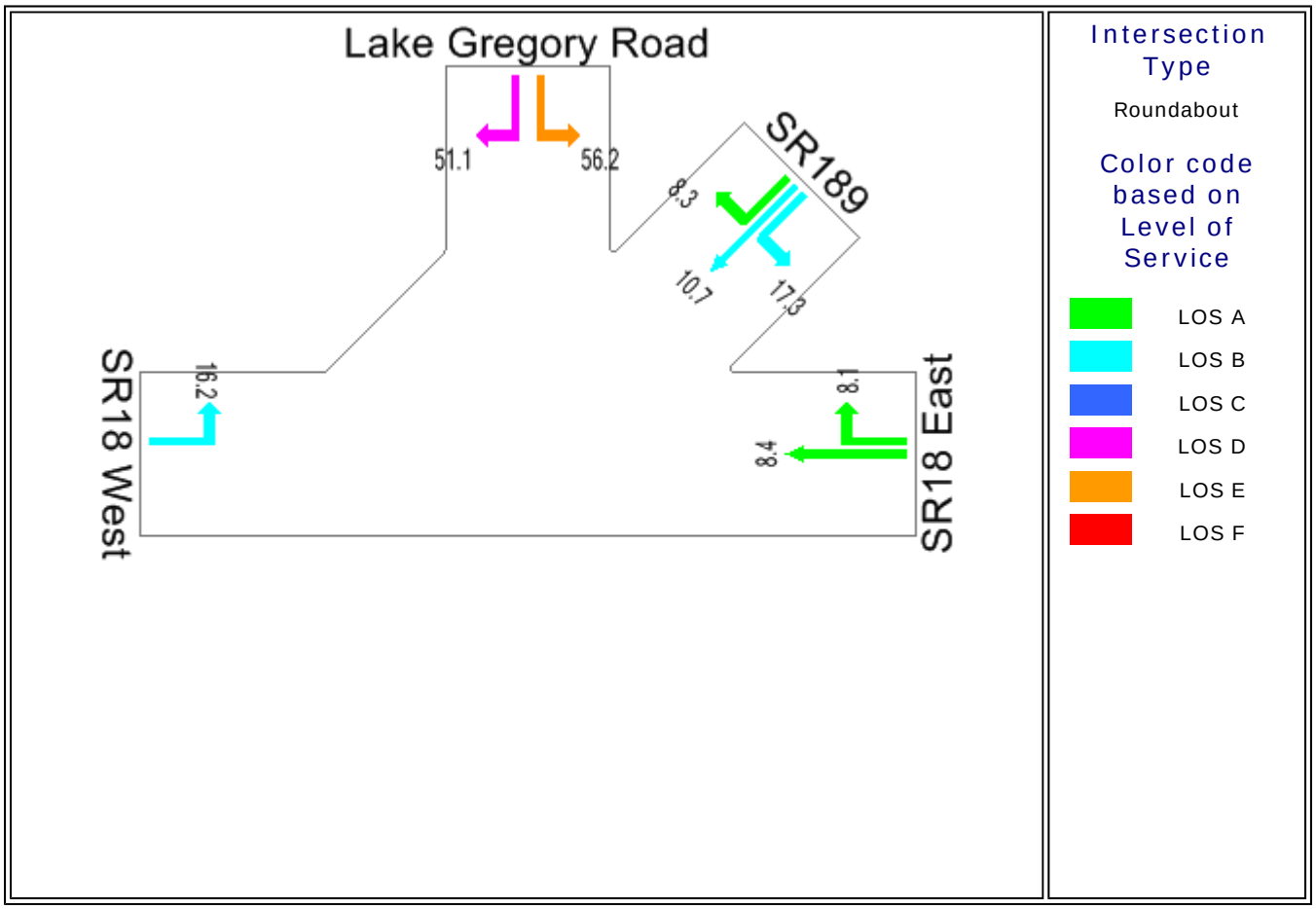

SIDRA SOLUTIONS

Site: 2013 Sat - Base + Project
R:\CTW430\May 2008\Sidra\Roundabout - 2013.aap
Processed Jun 26, 2008 04:04:31PM

A1852, LSA Associates, Inc., Large Office
Produced by SIDRA Intersection 3.2.0.1455
Copyright 2000-2007 Akcelik and Associates Pty Ltd
www.sidrasolutions.com

SIDRA INTERSECTION

Level of Service

Based on Delay (HCM method)

SR18, SR189, Lake Gregory Road

2013 Sat Peak West Roundabout - Base + Project

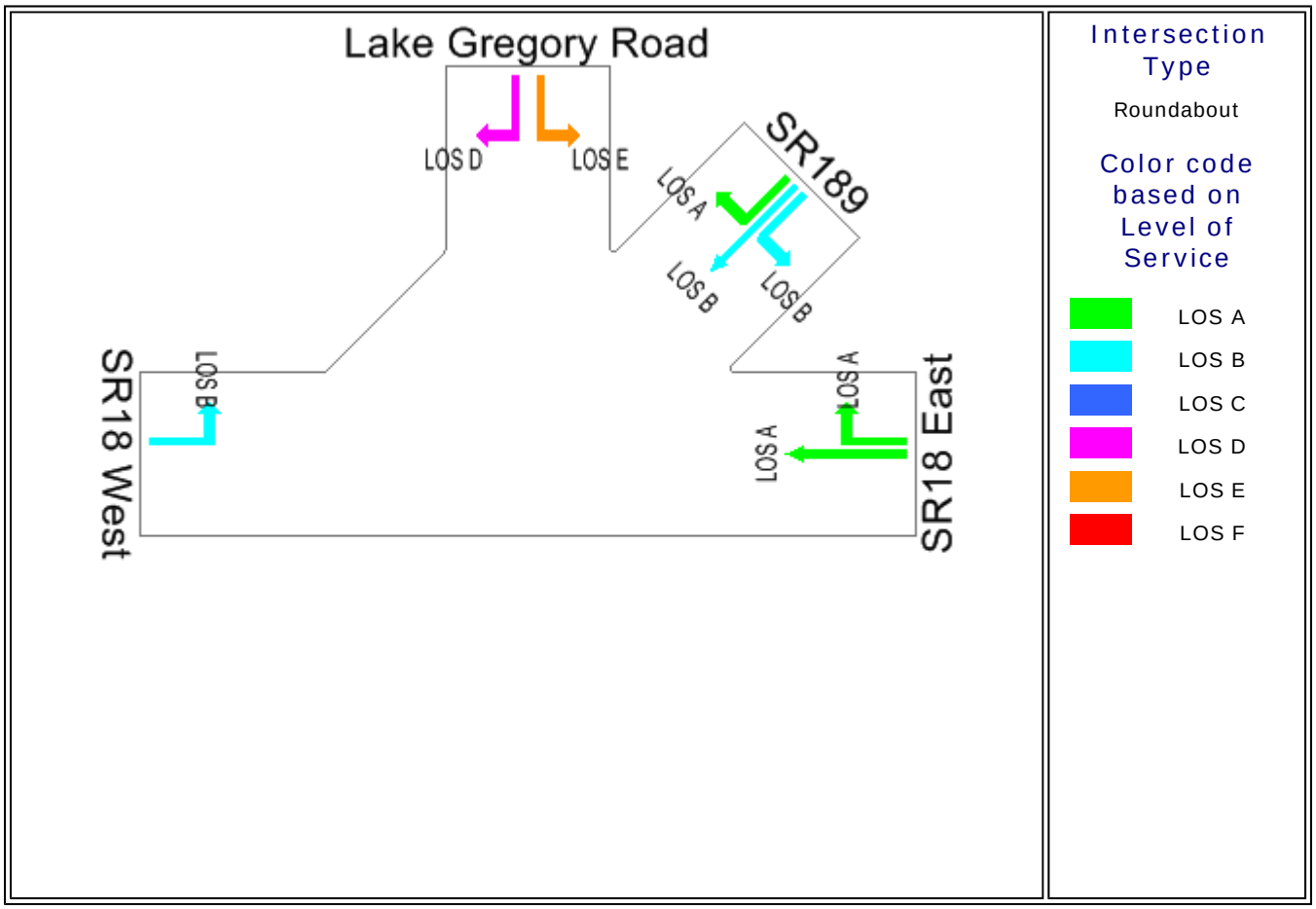

SIDRA SOLUTIONS

Site: 2013 Sat - Base + Project
R:\CTW430\May 2008\Sidra\Roundabout - 2013.aap
Processed Jun 26, 2008 04:04:31PM

A1852, LSA Associates, Inc., Large Office
Produced by SIDRA Intersection 3.2.0.1455
Copyright 2000-2007 Akcelik and Associates Pty Ltd
www.sidrasolutions.com

SIDRA INTERSECTION

Movement Summary

SR 18 and Daley Canyon

2013 Sat Peak East Roundabout - Base + Project

Roundabout

Vehicle Movements

Mov ID	Turn	Dem Flow (veh/h)	%HV	Deg of Satn (v/c)	Aver Delay (sec)	Level of Service	95% Back of Queue (ft)	Prop. Queued	Eff. Stop Rate	Aver Speed (mph)
East SR 18										
6T	T	402	0.0	0.573	12.7	LOS B	151	0.81	0.90	29.1
6R	R	205	0.0	0.292	10.5	LOS B	55	0.66	0.76	30.5
Approach		607	0.0	0.573	12.0	LOS B	151	0.76	0.85	29.6
Daley Canyon										
7L	L	235	0.0	0.337	15.5	LOS B	67	0.69	0.83	27.8
4R	R	447	0.0	0.277	7.0	LOS B#	11#	0.00	0.56	33.2
Approach		682	0.0	0.337	9.9	LOS A	67	0.24	0.65	31.1
West SR 18										
5L	L	414	0.0	0.472	14.3	LOS B	108	0.63	0.75	28.4
2T	T	559	0.0	0.294	6.6	LOS B#	14#	0.00	0.53	33.5
Approach		973	0.0	0.472	9.8	LOS A	108	0.27	0.63	31.1
All Vehicles		2262	0.0	0.573	10.4	LOS B	151	0.39	0.70	30.7

Symbols which may appear in this table:

Following Degree of Saturation
x = 1.00 for Short Lane with resulting Excess Flow
* x = 1.00 due to minimum capacity

Following LOS
- Based on density for continuous movements

Following Queue
- Density for continuous movement

SIDRA SOLUTIONS

Site: 2013 Sat Peak - Base + Project
R:\CTW430\May 2008\Sidra\East Roundabout - 2013.aap
Processed Jun 26, 2008 04:15:16PM

A1852, LSA Associates, Inc., Large Office
Produced by SIDRA Intersection 3.2.0.1455
Copyright 2000-2007 Akcelik and Associates Pty Ltd
www.sidrasolutions.com

SIDRA INTERSECTION

Input Volumes

Total flow rates as given by the user (veh/60 min)

SR 18 and Daley Canyon

2013 Sat Peak East Roundabout - Base + Project

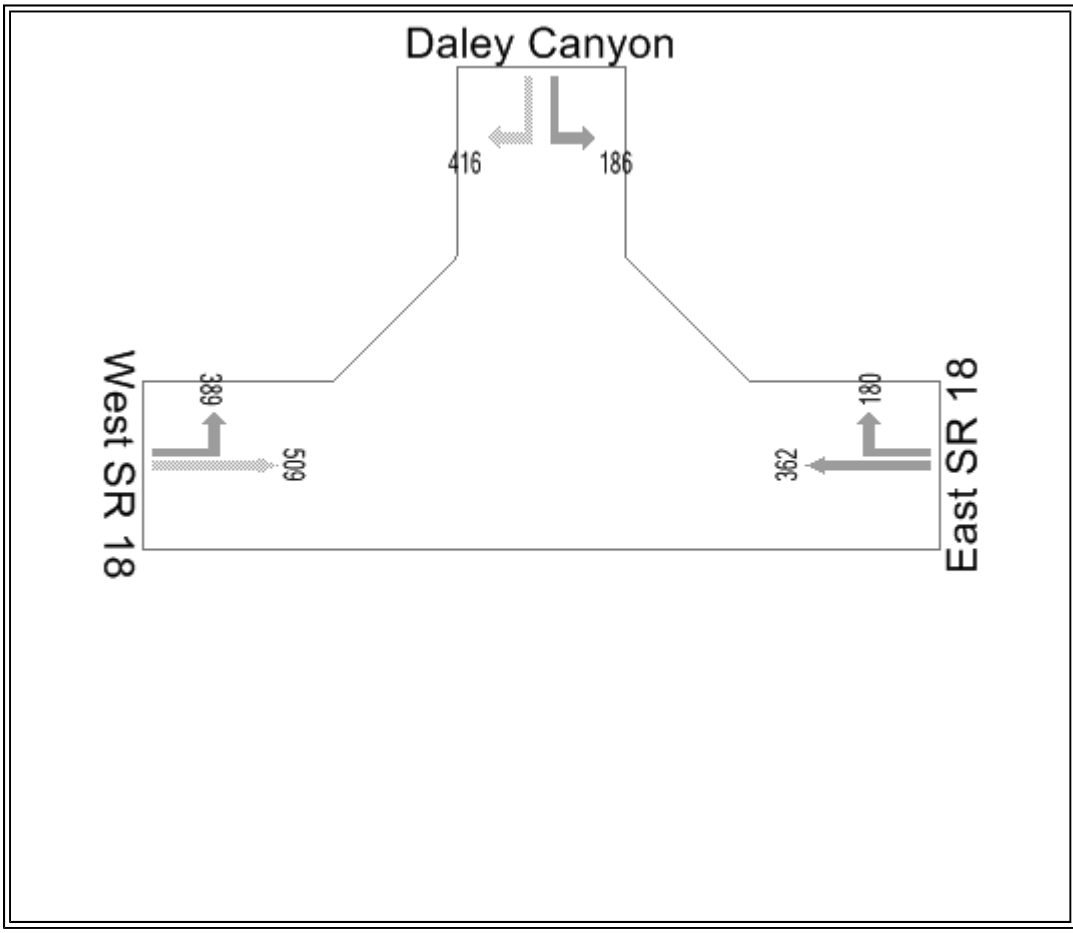

Intersection Type

Roundabout

No color code in this display

SIDRA SOLUTIONS

Site: 2013 Sat Peak - Base + Project
R:\CTW430\May 2008\Sidra\East Roundabout - 2013.aap
Processed Jun 26, 2008 04:15:16PM

A1852, LSA Associates, Inc., Large Office
Produced by SIDRA Intersection 3.2.0.1455
Copyright 2000-2007 Akcelik and Associates Pty Ltd
www.sidrasolutions.com

SIDRA INTERSECTION

Control Delay (Average)

Average control delay per vehicle (seconds)

SR 18 and Daley Canyon

2013 Sat Peak East Roundabout - Base + Project

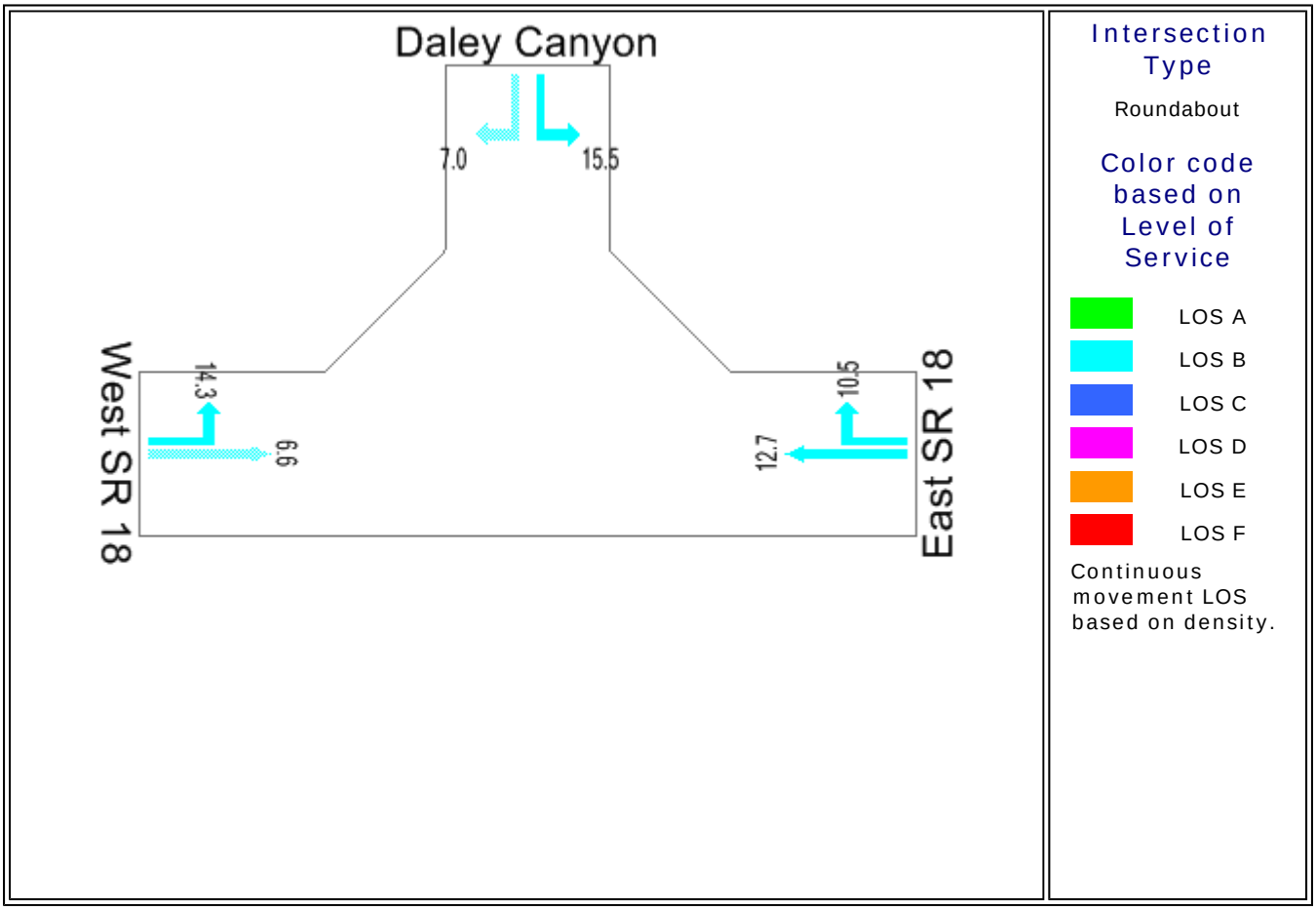

SIDRA SOLUTIONS

Site: 2013 Sat Peak - Base + Project
R:\CTW430\May 2008\Sidra\East Roundabout - 2013.aap
Processed Jun 26, 2008 04:15:16PM

A1852, LSA Associates, Inc., Large Office
Produced by SIDRA Intersection 3.2.0.1455
Copyright 2000-2007 Akcelik and Associates Pty Ltd
www.sidrasolutions.com

SIDRA INTERSECTION

Level of Service

Based on Delay (HCM method)

SR 18 and Daley Canyon

2013 Sat Peak East Roundabout - Base + Project

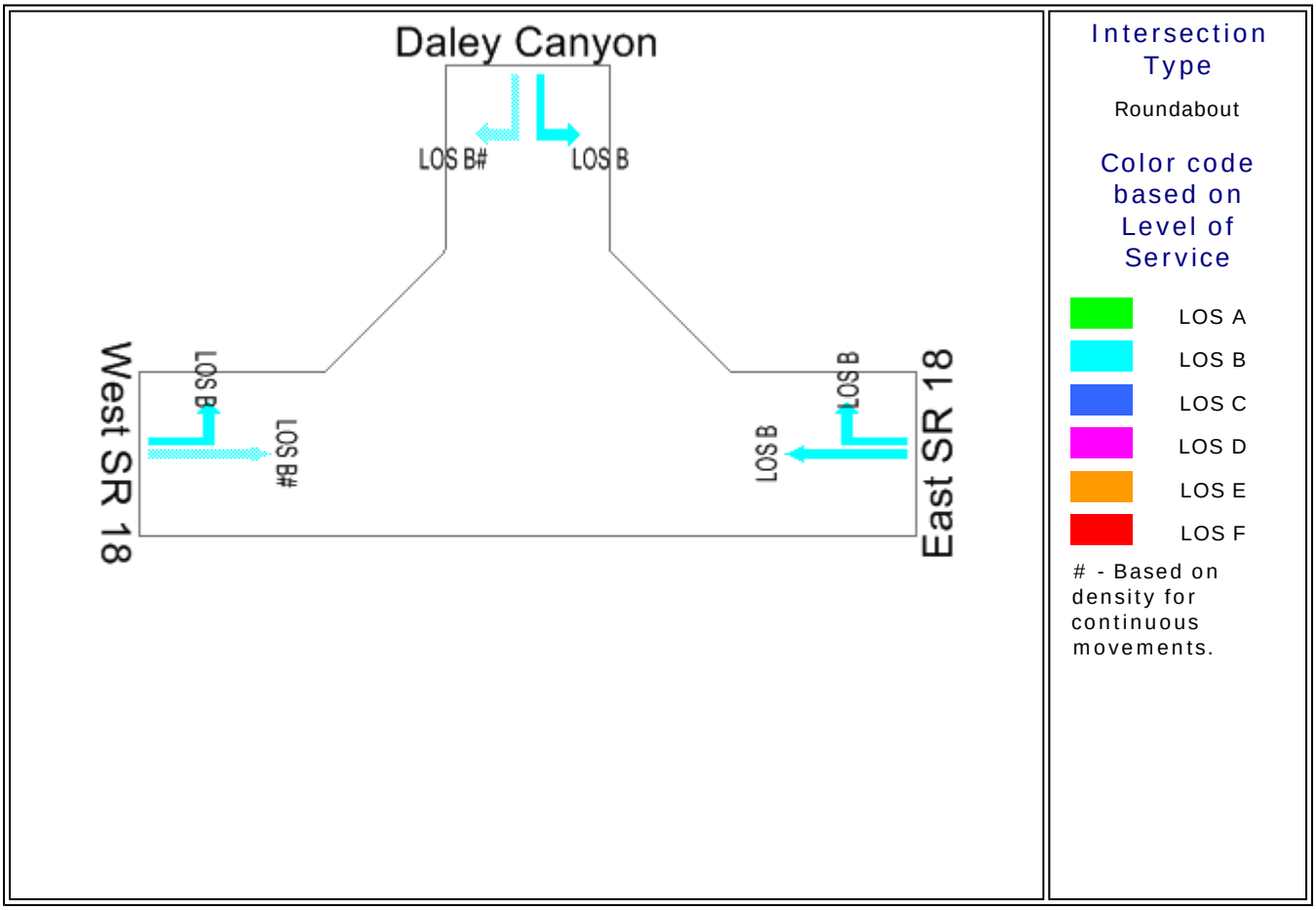

SIDRA SOLUTIONS

Site: 2013 Sat Peak - Base + Project
R:\CTW430\May 2008\Sidra\East Roundabout - 2013.aap
Processed Jun 26, 2008 04:15:16PM

A1852, LSA Associates, Inc., Large Office
Produced by SIDRA Intersection 3.2.0.1455
Copyright 2000-2007 Akcelik and Associates Pty Ltd
www.sidrasolutions.com

SIDRA INTERSECTION

Movement Summary

SR18, SR189, Lake Gregory Road

2013 Sunday Peak West Roundabout - Base + Project

Roundabout

Vehicle Movements

Mov ID	Turn	Dem Flow (veh/h)	%HV	Deg of Satn (v/c)	Aver Delay (sec)	Level of Service	95% Back of Queue (ft)	Prop. Queued	Eff. Stop Rate	Aver Speed (mph)
SR18 East										
6T	T	629	0.0	0.289	7.3	LOS A	48	0.34	0.55	32.0
6R	R	190	0.0	0.291	7.6	LOS A	26	0.32	0.54	31.8
Approach		819	0.0	0.291	7.4	LOS A	48	0.33	0.55	32.0
SR189										
17L	L	102	0.0	0.336	18.1	LOS B	45	0.66	0.93	26.7
14T	T	80	0.0	0.336	11.4	LOS B	45	0.66	0.85	30.0
14R	R	89	0.0	0.125	8.1	LOS A	11	0.31	0.59	31.8
Approach		271	0.0	0.336	12.8	LOS B	45	0.54	0.80	29.1
Lake Gregory Road										
7L	L	208	0.0	0.565	20.2	LOS C	104	0.75	1.01	25.6
4R	R	103	0.0	0.566	15.0	LOS B	104	0.75	0.97	27.7
Approach		311	0.0	0.566	18.5	LOS B	104	0.75	1.00	26.2
SR18 West										
5L	L	65	0.0	0.087	13.7	LOS B	12	0.45	0.73	28.9
Approach		65	0.0	0.087	13.7	LOS B	12	0.45	0.73	28.9
All Vehicles		1466	0.0	0.566	11.0	LOS B	104	0.47	0.70	29.9

Symbols which may appear in this table:

Following Degree of Saturation
x = 1.00 for Short Lane with resulting Excess Flow
* x = 1.00 due to minimum capacity

Following LOS
- Based on density for continuous movements

Following Queue
- Density for continuous movement

SIDRA SOLUTIONS

Site: 2013 Sun - Base + Project
R:\CTW430\May 2008\Sidra\Roundabout - 2013.aap
Processed Jun 26, 2008 04:04:31PM

A1852, LSA Associates, Inc., Large Office
Produced by SIDRA Intersection 3.2.0.1455
Copyright 2000-2007 Akcelik and Associates Pty Ltd
www.sidrasolutions.com

Input Volumes

Total flow rates as given by the user (veh/60 min)

SR18, SR189, Lake Gregory Road

2013 Sunday Peak West Roundabout - Base + Project

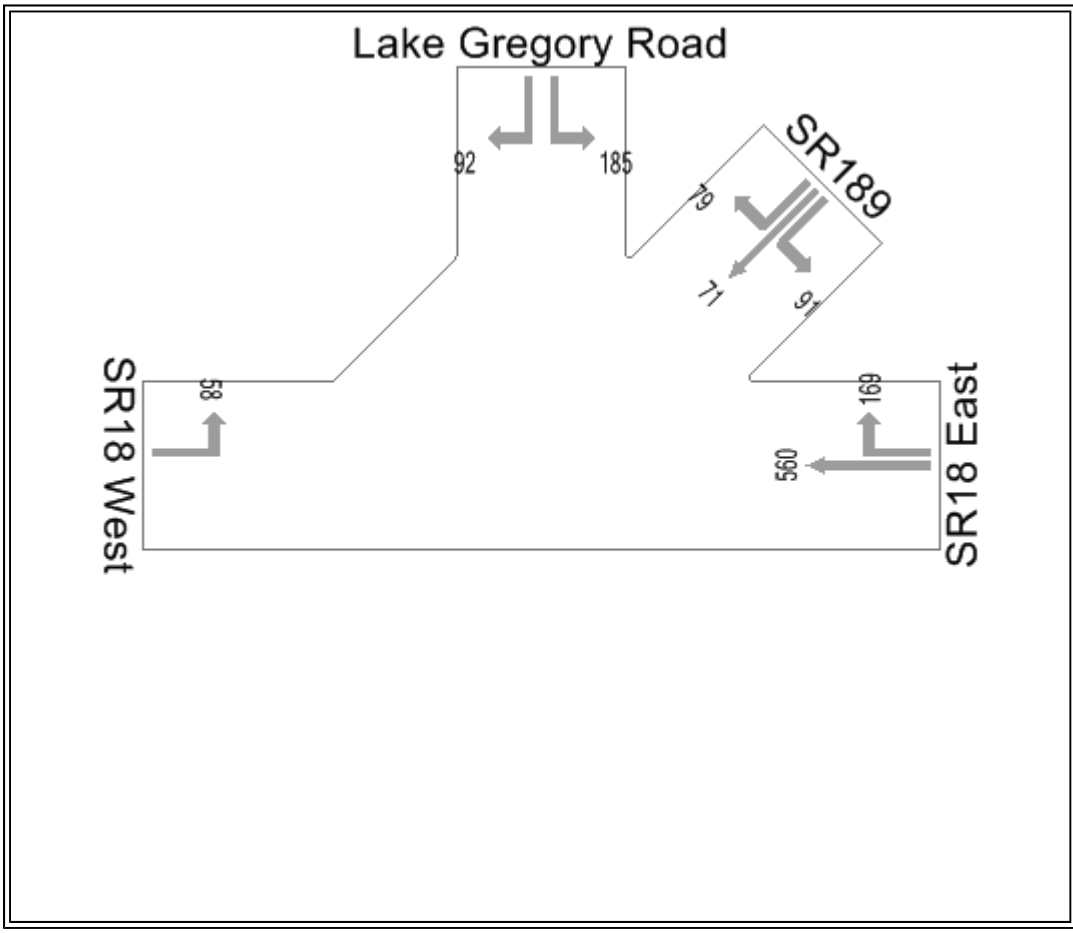

Intersection Type

Roundabout

No color code in this display

SIDRA SOLUTIONS

Site: 2013 Sun - Base + Project
R:\CTW430\May 2008\Sidra\Roundabout - 2013.aap
Processed Jun 26, 2008 04:04:31PM

A1852, LSA Associates, Inc., Large Office
Produced by SIDRA Intersection 3.2.0.1455
Copyright 2000-2007 Akcelik and Associates Pty Ltd
www.sidrasolutions.com

SIDRA INTERSECTION

Control Delay (Average)

Average control delay per vehicle (seconds)

SR18, SR189, Lake Gregory Road

2013 Sunday Peak West Roundabout - Base + Project

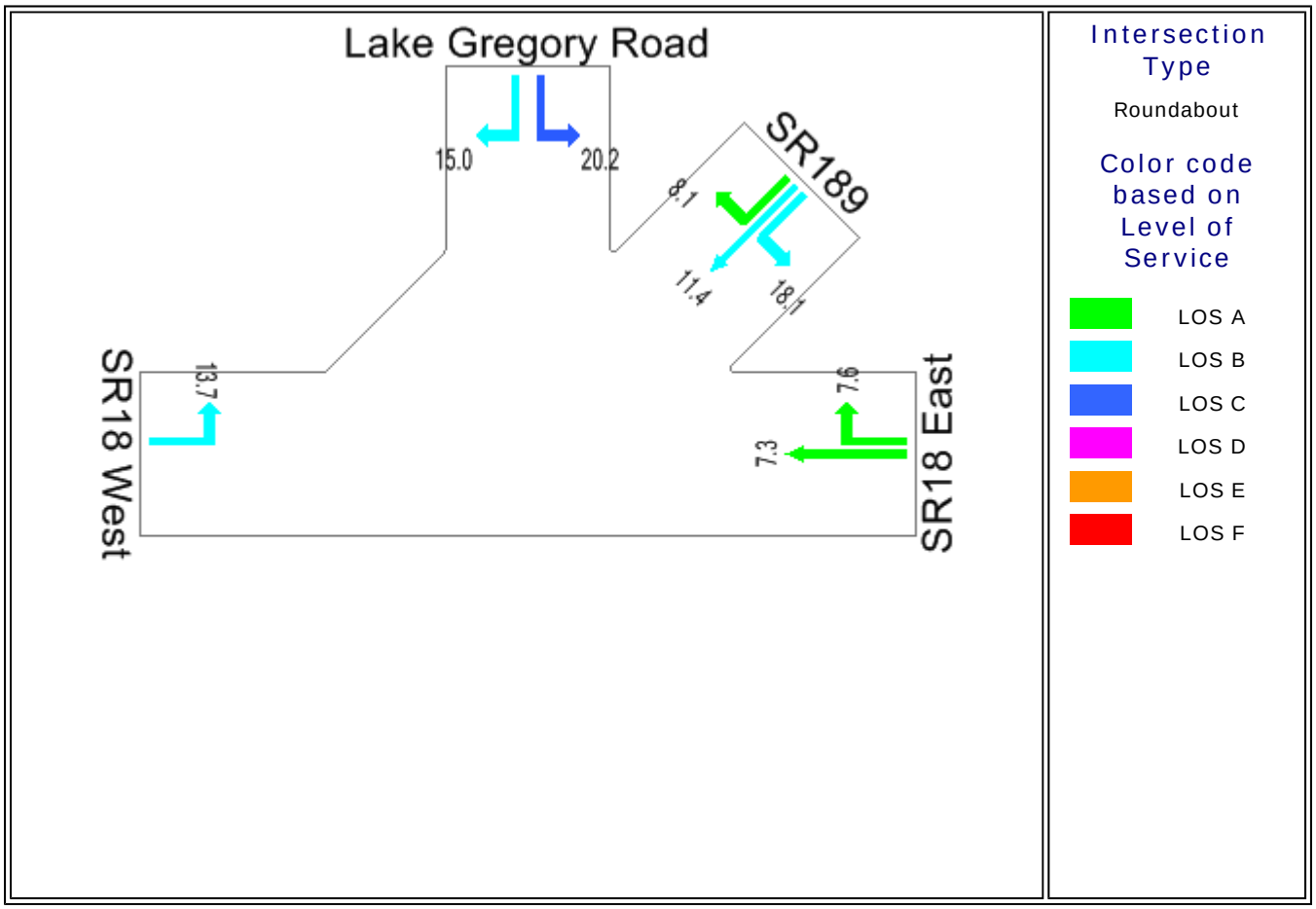

SIDRA SOLUTIONS

Site: 2013 Sun - Base + Project
R:\CTW430\May 2008\Sidra\Roundabout - 2013.aap
Processed Jun 26, 2008 04:04:31PM

A1852, LSA Associates, Inc., Large Office
Produced by SIDRA Intersection 3.2.0.1455
Copyright 2000-2007 Akcelik and Associates Pty Ltd
www.sidrasolutions.com

SIDRA INTERSECTION

Level of Service

Based on Delay (HCM method)

SR18, SR189, Lake Gregory Road

2013 Sunday Peak West Roundabout - Base + Project

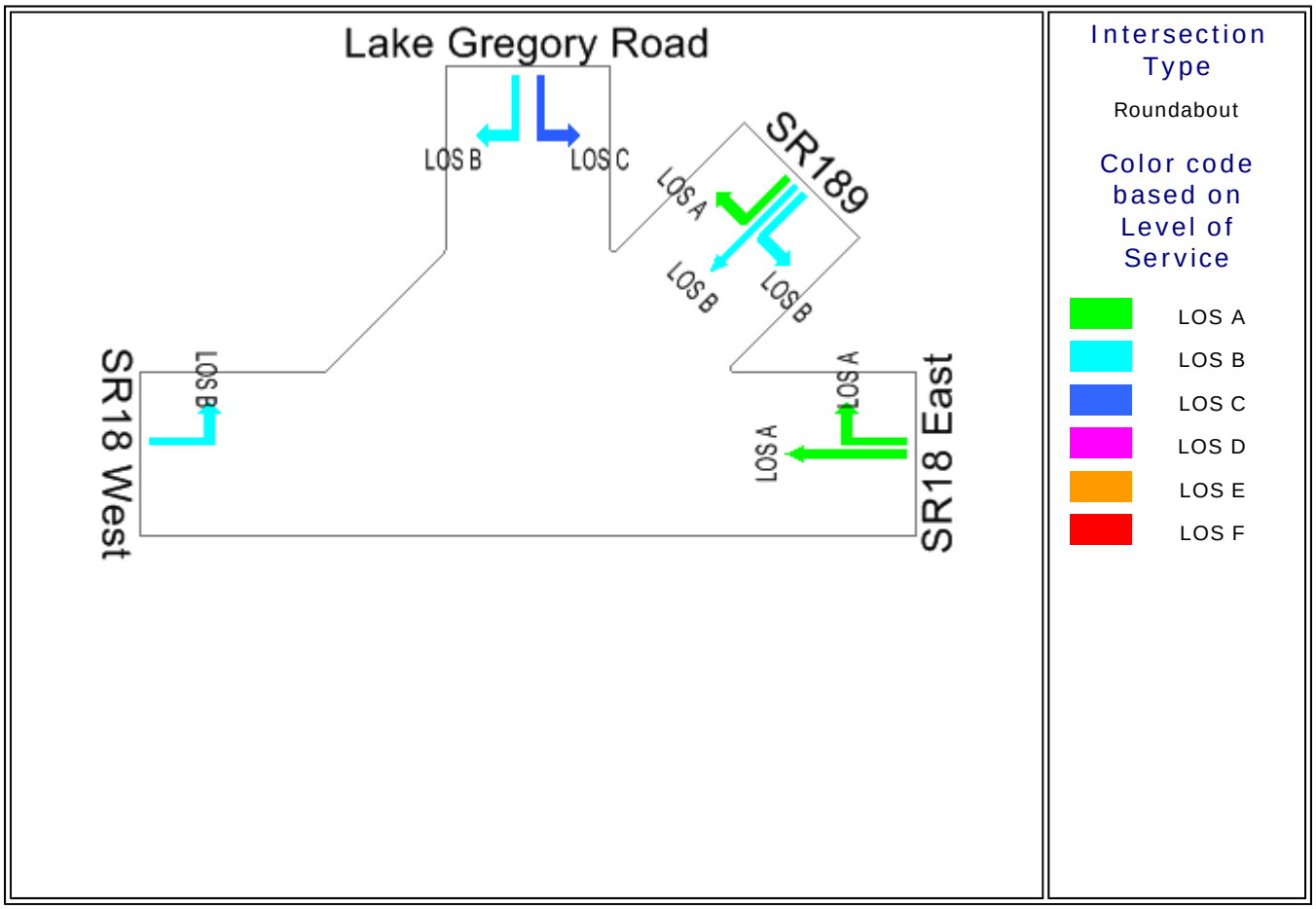

SIDRA SOLUTIONS

Site: 2013 Sun - Base + Project
R:\CTW430\May 2008\Sidra\Roundabout - 2013.aap
Processed Jun 26, 2008 04:04:31PM

A1852, LSA Associates, Inc., Large Office
Produced by SIDRA Intersection 3.2.0.1455
Copyright 2000-2007 Akcelik and Associates Pty Ltd
www.sidrasolutions.com

SIDRA INTERSECTION

Movement Summary

SR 18 and Daley Canyon

2013 Sun Peak East Roundabout - Base + Project

Roundabout

Vehicle Movements

Mov ID	Turn	Dem Flow (veh/h)	%HV	Deg of Satn (v/c)	Aver Delay (sec)	Level of Service	95% Back of Queue (ft)	Prop. Queued	Eff. Stop Rate	Aver Speed (mph)
East SR 18										
6T	T	465	0.0	0.698	16.0	LOS B	230	0.92	1.04	27.2
6R	R	313	0.0	0.470	11.9	LOS B	107	0.78	0.86	29.6
Approach		778	0.0	0.699	14.4	LOS B	230	0.86	0.97	28.1
Daley Canyon										
7L	L	340	0.0	0.532	18.1	LOS B	134	0.83	0.96	26.5
4R	R	741	0.0	0.459	7.0	LOS C#	19#	0.00	0.56	33.2
Approach		1081	0.0	0.532	10.5	LOS B	134	0.26	0.68	30.7
West SR 18										
5L	L	444	0.0	0.589	17.0	LOS B	163	0.80	0.89	27.0
2T	T	449	0.0	0.236	6.5	LOS B#	11#	0.00	0.53	33.5
Approach		893	0.0	0.589	11.8	LOS B	163	0.40	0.71	29.9
All Vehicles		2752	0.0	0.698	12.0	LOS B	230	0.48	0.77	29.7

Symbols which may appear in this table:

Following Degree of Saturation
x = 1.00 for Short Lane with resulting Excess Flow
* x = 1.00 due to minimum capacity

Following LOS
- Based on density for continuous movements

Following Queue
- Density for continuous movement

SIDRA SOLUTIONS

Site: 2013 Sun Peak - Base + Project
R:\CTW430\May 2008\Sidra\East Roundabout - 2013.aap
Processed Jun 26, 2008 04:15:16PM

A1852, LSA Associates, Inc., Large Office
Produced by SIDRA Intersection 3.2.0.1455
Copyright 2000-2007 Akcelik and Associates Pty Ltd
www.sidrasolutions.com

Input Volumes

Total flow rates as given by the user (veh/60 min)

SR 18 and Daley Canyon

2013 Sun Peak East Roundabout - Base + Project

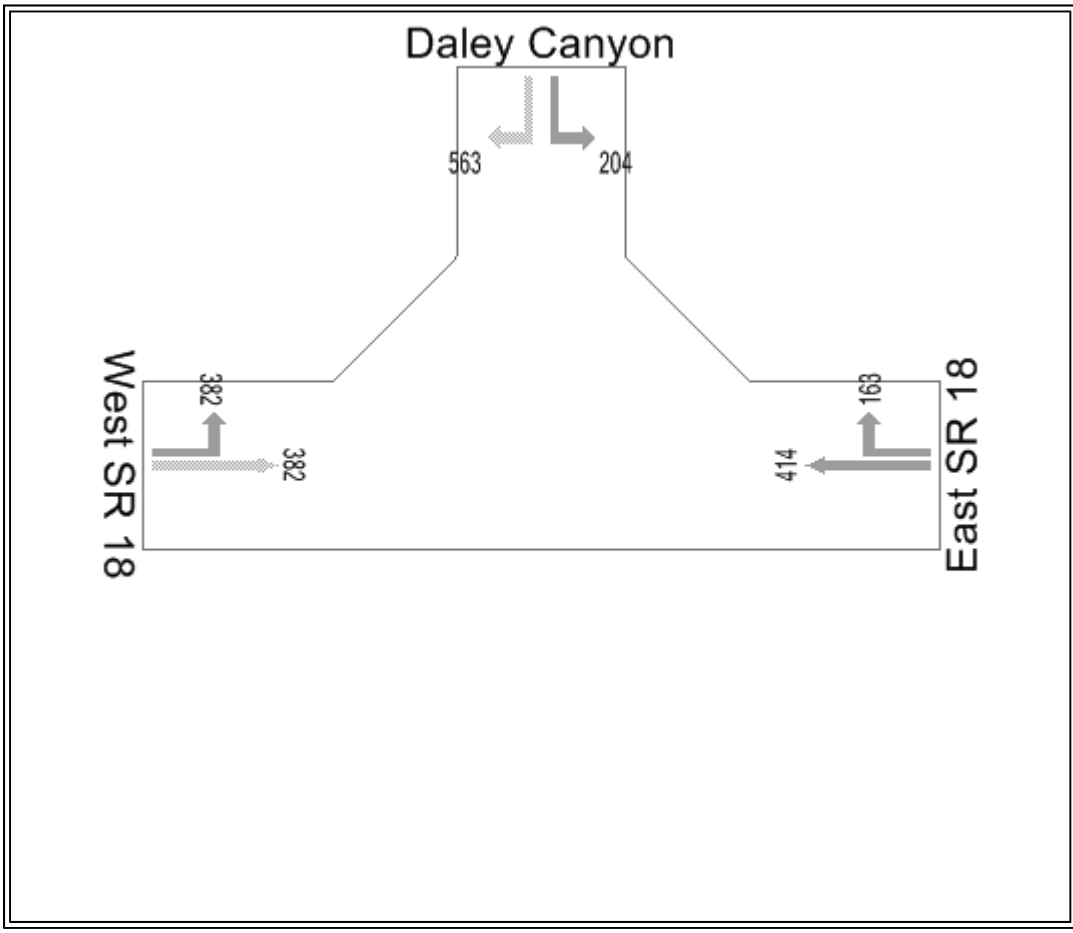

Intersection Type

Roundabout

No color code in this display

Site: 2013 Sun Peak - Base + Project
R:\CTW430\May 2008\Sidra\East Roundabout - 2013.aap
Processed Jun 26, 2008 04:15:16PM

A1852, LSA Associates, Inc., Large Office
Produced by SIDRA Intersection 3.2.0.1455
Copyright 2000-2007 Akcelik and Associates Pty Ltd
www.sidrasolutions.com

SIDRA INTERSECTION

Control Delay (Average)

Average control delay per vehicle (seconds)

SR 18 and Daley Canyon

2013 Sun Peak East Roundabout - Base + Project

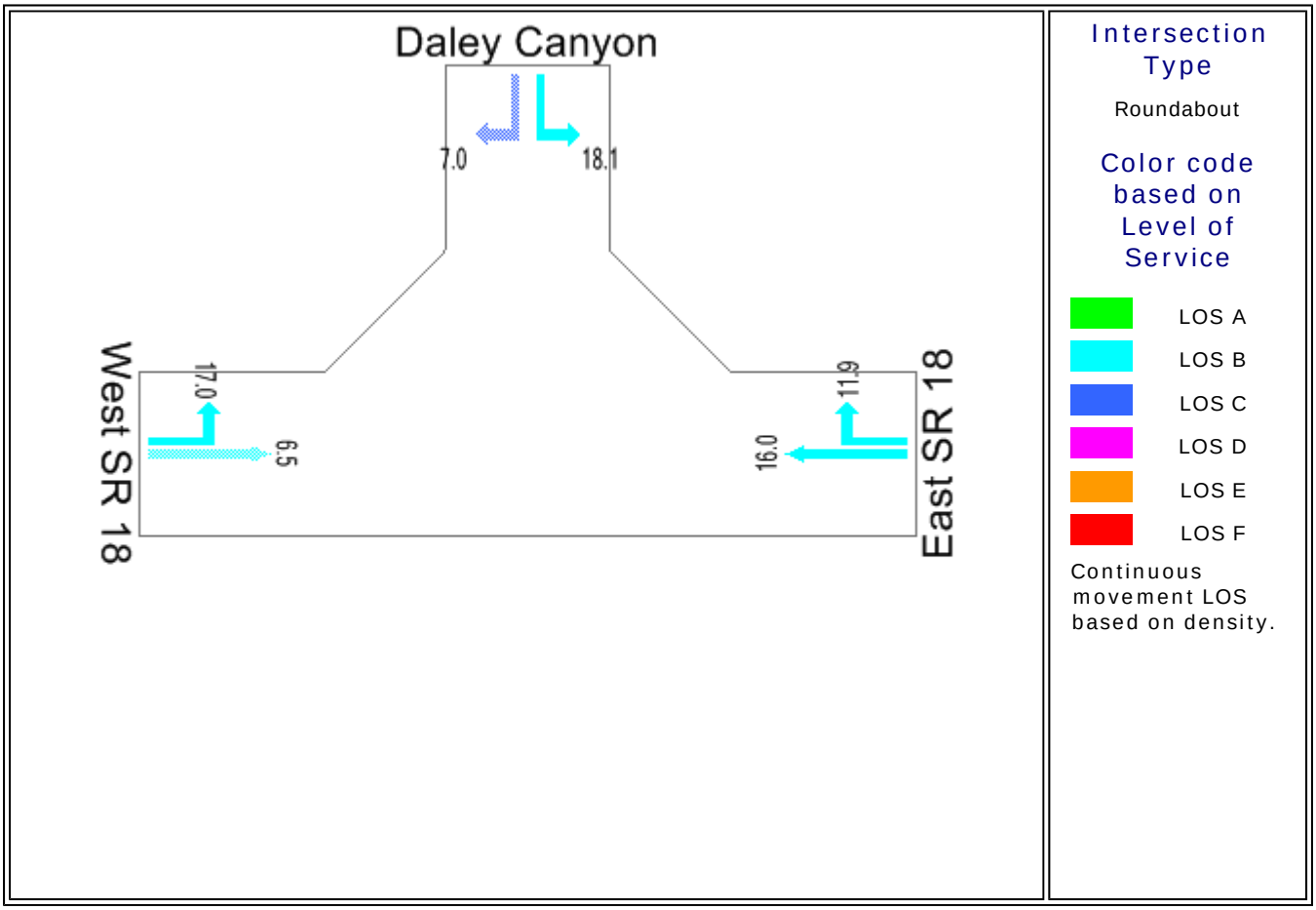

SIDRA SOLUTIONS

Site: 2013 Sun Peak - Base + Project
R:\CTW430\May 2008\Sidra\East Roundabout - 2013.aap
Processed Jun 26, 2008 04:15:16PM

A1852, LSA Associates, Inc., Large Office
Produced by SIDRA Intersection 3.2.0.1455
Copyright 2000-2007 Akcelik and Associates Pty Ltd
www.sidrasolutions.com

SIDRA INTERSECTION

Level of Service

Based on Delay (HCM method)

SR 18 and Daley Canyon

2013 Sun Peak East Roundabout - Base + Project

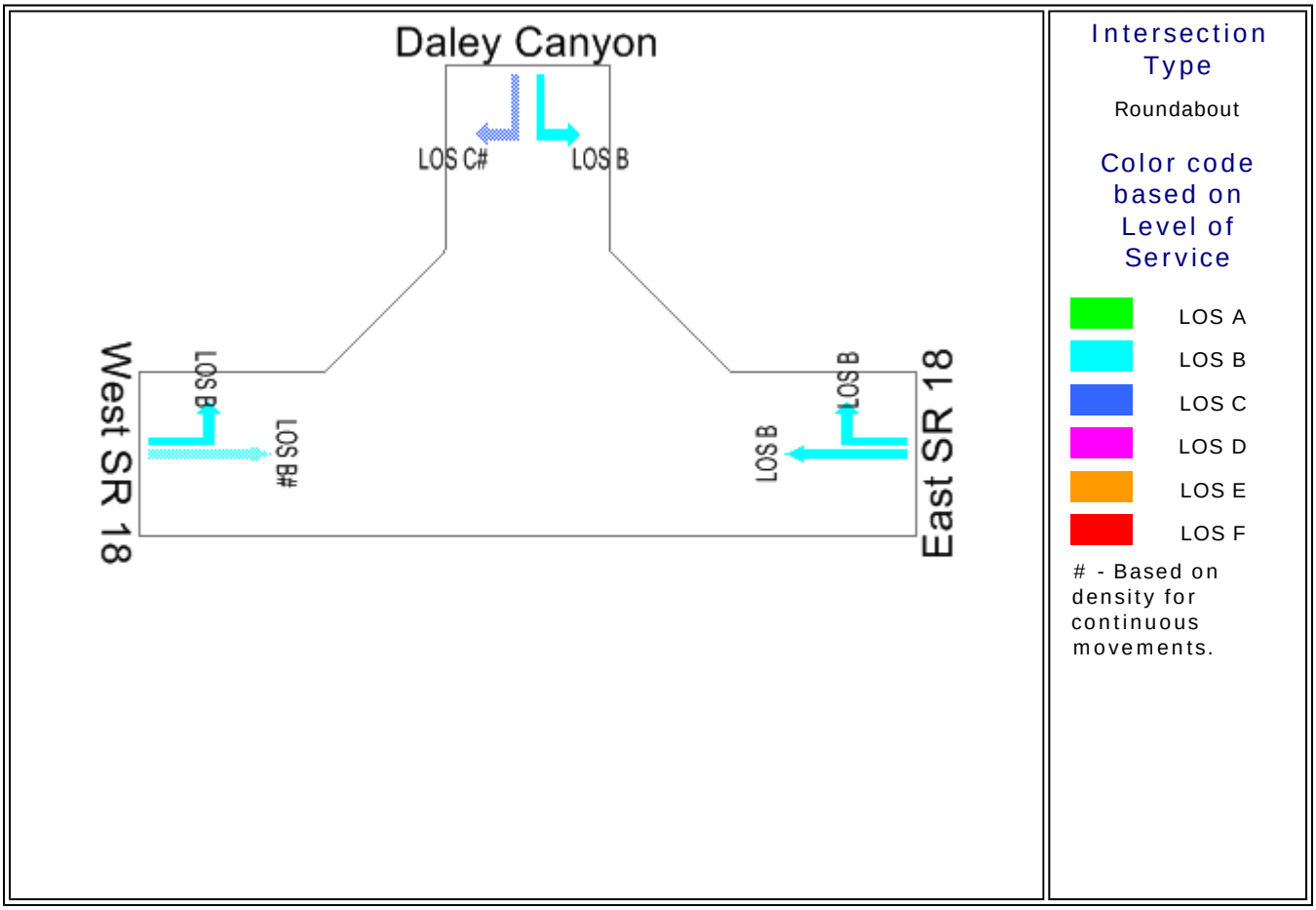

SIDRA SOLUTIONS

Site: 2013 Sun Peak - Base + Project
R:\CTW430\May 2008\Sidra\East Roundabout - 2013.aap
Processed Jun 26, 2008 04:15:16PM

A1852, LSA Associates, Inc., Large Office
Produced by SIDRA Intersection 3.2.0.1455
Copyright 2000-2007 Akcelik and Associates Pty Ltd
www.sidrasolutions.com

YEAR 2030 WITH PROJECT WITH IMPROVEMENTS CONDITIONS ROUNDABOUT ALTERNATIVE

SIDRA INTERSECTION

Movement Summary

SR18, SR189, Lake Gregory Road

2030 Sat Peak West Roundabout - Base + Project

Roundabout

Vehicle Movements

Mov ID	Turn	Dem Flow (veh/h)	%HV	Deg of Satn (v/c)	Aver Delay (sec)	Level of Service	95% Back of Queue (ft)	Prop. Queued	Eff. Stop Rate	Aver Speed (mph)
SR18 East										
6T	T	595	2.0	0.327	8.4	LOS A	56	0.50	0.65	31.3
6R	R	211	1.9	0.348	8.1	LOS A	34	0.37	0.60	31.6
Approach		805	2.0	0.348	8.3	LOS A	56	0.47	0.64	31.4
SR189										
17L	L	73	1.4	0.190	17.6	LOS B	24	0.64	0.91	26.9
14T	T	25	3.8	0.190	11.0	LOS B	24	0.64	0.83	30.3
14R	R	113	1.8	0.164	8.5	LOS A	16	0.37	0.63	31.5
Approach		210	1.9	0.190	12.0	LOS B	24	0.50	0.75	29.6
Lake Gregory Road										
7L	L	415	1.9	0.888	30.3	LOS C	323	0.95	1.32	21.6
4R	R	97	2.1	0.890	25.3	LOS C	323	0.95	1.31	22.9
Approach		511	2.0	0.888	29.4	LOS C	323	0.95	1.32	21.9
SR18 West										
5L	L	156	1.9	0.247	15.8	LOS B	47	0.70	0.84	27.7
Approach		156	1.9	0.247	15.8	LOS B	47	0.70	0.84	27.7
All Vehicles		1682	2.0	0.890	15.9	LOS B	323	0.64	0.88	27.2

Symbols which may appear in this table:

Following Degree of Saturation
x = 1.00 for Short Lane with resulting Excess Flow
* x = 1.00 due to minimum capacity

Following LOS
- Based on density for continuous movements

Following Queue
- Density for continuous movement

SIDRA SOLUTIONS

Site: 2030 Sat - Base + Project
P:\P\05\05133-000 Royal Rangers\SIDRA\7-30-07 Revised 2030 volumes\Roundabout - 2030.aap
Processed Jul 31, 2007 09:26:22AM

M0115, DKS, Small Office
Produced by SIDRA Intersection 3.1.061208.34
Copyright 2000-2006 Akcelik and Associates Pty Ltd
www.sidrasolutions.com

SIDRA INTERSECTION

Input Volumes

Total flow rates as given by the user (veh/60 min)

SR18, SR189, Lake Gregory Road

2030 Sat Peak West Roundabout - Base + Project

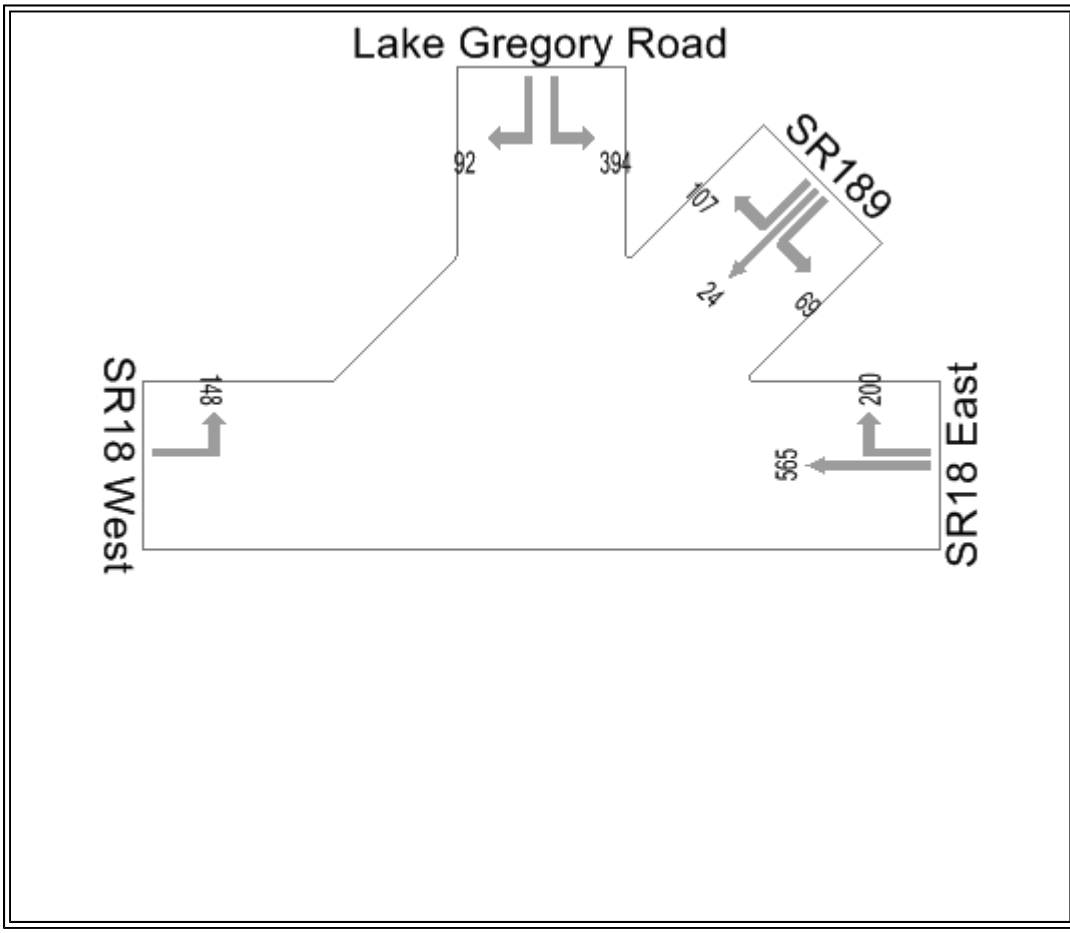

Intersection Type

Roundabout

No color code in this display

SIDRA SOLUTIONS

Site: 2030 Sat - Base + Project
P:\P\05\05133-000 Royal Rangers\SIDRA\7-30-07 Revised 2030 volumes\Roundabout - 2030.aap
Processed Jul 31, 2007 09:26:22AM

M0115, DKS, Small Office
Produced by SIDRA Intersection 3.1.061208.34
Copyright 2000-2006 Akcelik and Associates Pty Ltd
www.sidrasolutions.com

SIDRA INTERSECTION

Control Delay (Average)

Average control delay per vehicle (seconds)

SR18, SR189, Lake Gregory Road

2030 Sat Peak West Roundabout - Base + Project

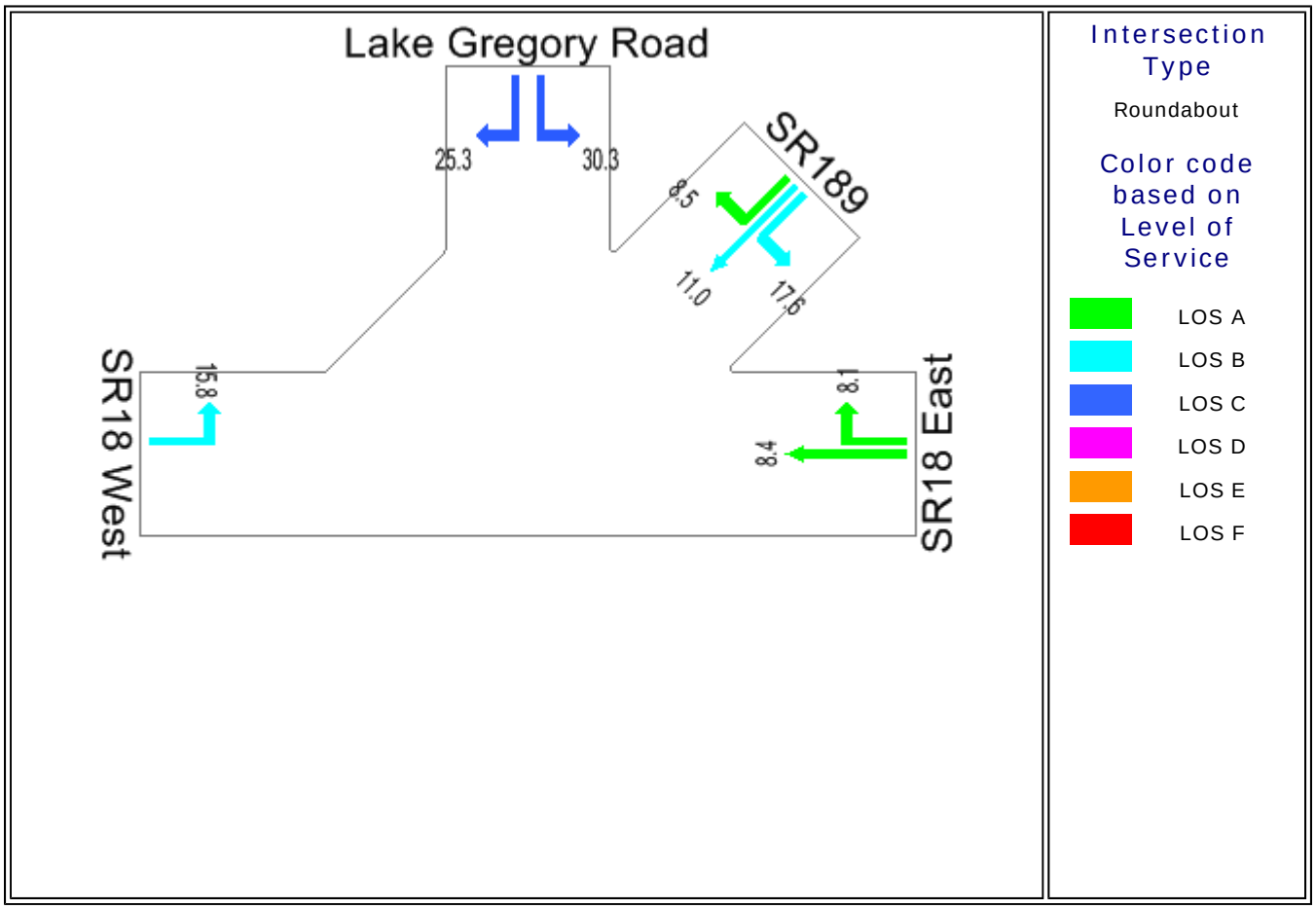

SIDRA SOLUTIONS

Site: 2030 Sat - Base + Project
P:\P\05\05133-000 Royal Rangers\SIDRA\7-30-07 Revised 2030 volumes\Roundabout - 2030.aap
Processed Jul 31, 2007 09:26:22AM

M0115, DKS, Small Office
Produced by SIDRA Intersection 3.1.061208.34
Copyright 2000-2006 Akcelik and Associates Pty Ltd
www.sidrasolutions.com

SIDRA INTERSECTION

Level of Service

Based on Delay (HCM method)

SR18, SR189, Lake Gregory Road

2030 Sat Peak West Roundabout - Base + Project

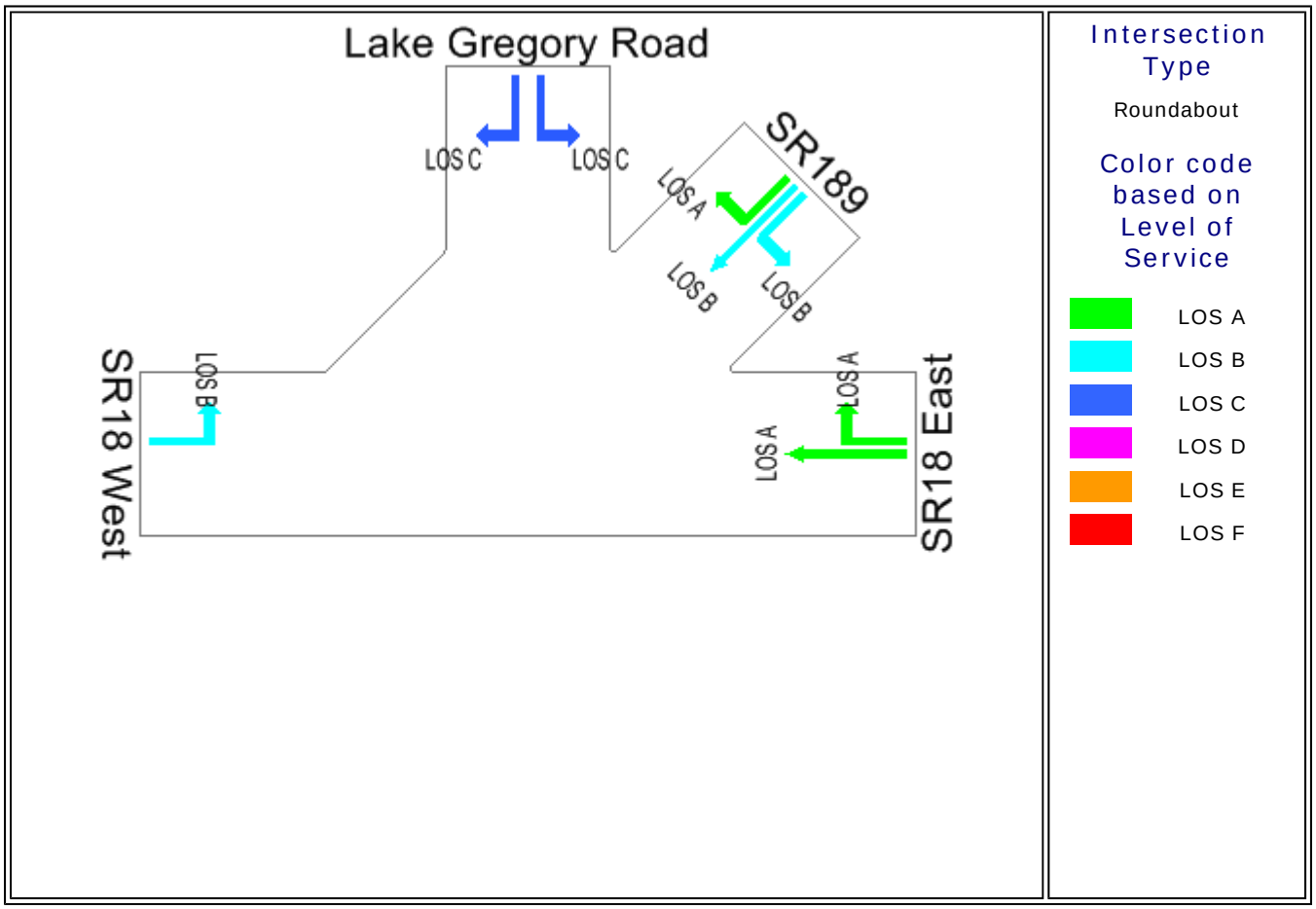

SIDRA SOLUTIONS

Site: 2030 Sat - Base + Project
P:\P\05\05133-000 Royal Rangers\SIDRA\7-30-07 Revised 2030 volumes\Roundabout - 2030.aap
Processed Jul 31, 2007 09:26:22AM

M0115, DKS, Small Office
Produced by SIDRA Intersection 3.1.061208.34
Copyright 2000-2006 Akcelik and Associates Pty Ltd
www.sidrasolutions.com

SIDRA INTERSECTION

Movement Summary

SR 18 and Daley Canyon

2030 Sat Peak East Roundabout - Base + Project

Roundabout

Vehicle Movements

Mov ID	Turn	Dem Flow (veh/h)	%HV	Deg of Satn (v/c)	Aver Delay (sec)	Level of Service	95% Back of Queue (ft)	Prop. Queued	Eff. Stop Rate	Aver Speed (mph)
East SR 18										
6T	T	479	2.1	0.928	38.3	LOS D	482	1.00	1.46	18.8
6R	R	298	2.0	0.576	16.7	LOS B	154	0.92	1.05	26.8
Approach		778	2.1	0.928	30.0	LOS C	482	0.97	1.30	21.3
Daley Canyon										
7L	L	304	2.0	0.490	17.7	LOS B	118	0.82	0.94	26.7
4R	R	639	2.0	0.336	7.0	LOS B#	16#	0.00	0.56	33.2
Approach		943	2.0	0.489	10.5	LOS B	118	0.27	0.68	30.7
West SR 18										
5L	L	626	2.1	0.767	20.0	LOS C	316	0.94	0.97	25.6
2T	T	674	1.9	0.354	6.6	LOS B#	17#	0.00	0.53	33.5
Approach		1300	2.0	0.767	13.1	LOS B	316	0.45	0.74	29.1
All Vehicles		3021	2.0	0.928	16.6	LOS B	482	0.53	0.87	27.0

Symbols which may appear in this table:

Following Degree of Saturation
x = 1.00 for Short Lane with resulting Excess Flow
* x = 1.00 due to minimum capacity

Following LOS
- Based on density for continuous movements

Following Queue
- Density for continuous movement

SIDRA SOLUTIONS

Site: 2030 Sat Peak - Base + Project
P:\P\05\05133-000 Royal Rangers\SIDRA\7-30-07 Revised 2030 volumes\East Roundabout - 2030.aap
Processed Jul 31, 2007 09:38:41AM

M0115, DKS, Small Office
Produced by SIDRA Intersection 3.1.061208.34
Copyright 2000-2006 Akcelik and Associates Pty Ltd
www.sidrasolutions.com

SIDRA INTERSECTION

Input Volumes

Total flow rates as given by the user (veh/60 min)

SR 18 and Daley Canyon

2030 Sat Peak East Roundabout - Base + Project

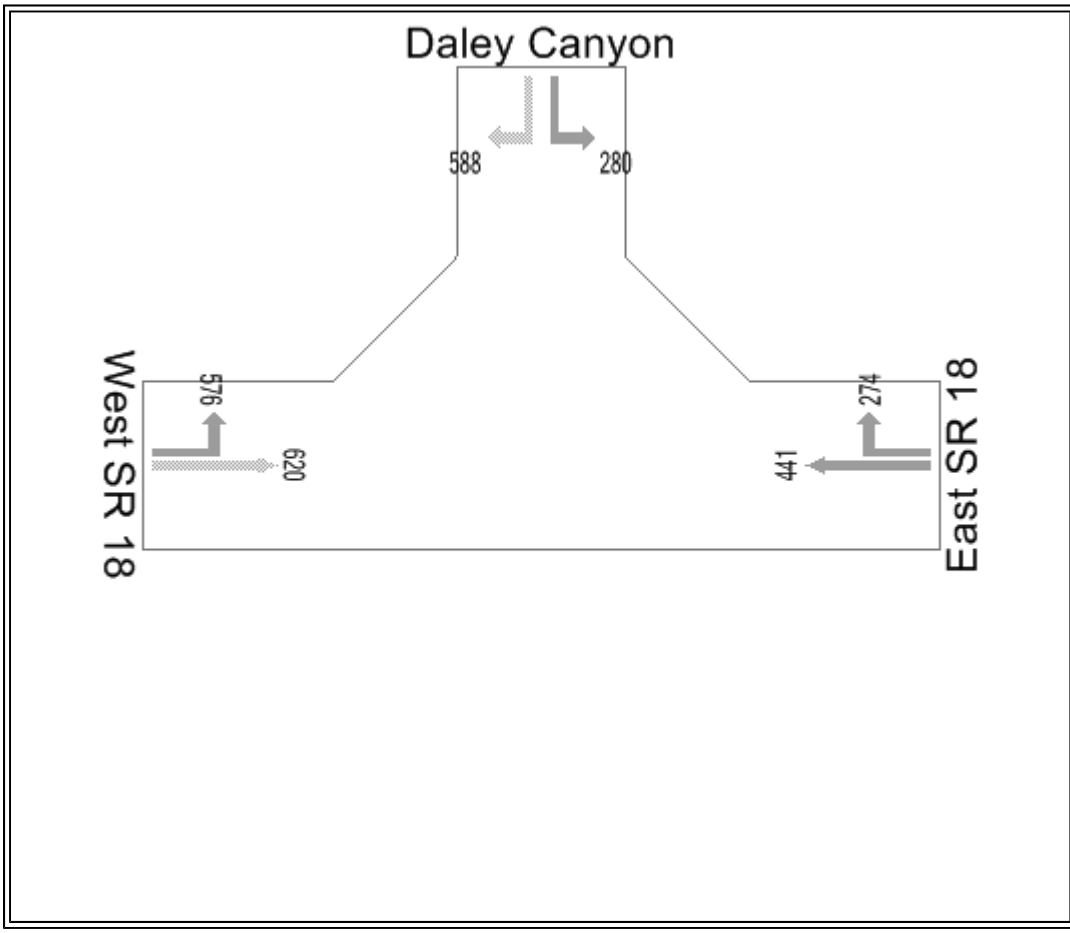

Intersection Type

Roundabout

No color code in this display

SIDRA SOLUTIONS

Site: 2030 Sat Peak - Base + Project
P:\P\05\05133-000 Royal Rangers\SIDRA\7-30-07 Revised 2030 volumes\East Roundabout - 2030.aap
Processed Jul 31, 2007 09:38:41AM

M0115, DKS, Small Office
Produced by SIDRA Intersection 3.1.061208.34
Copyright 2000-2006 Akcelik and Associates Pty Ltd
www.sidrasolutions.com

SIDRA INTERSECTION

Control Delay (Average)

Average control delay per vehicle (seconds)

SR 18 and Daley Canyon

2030 Sat Peak East Roundabout - Base + Project

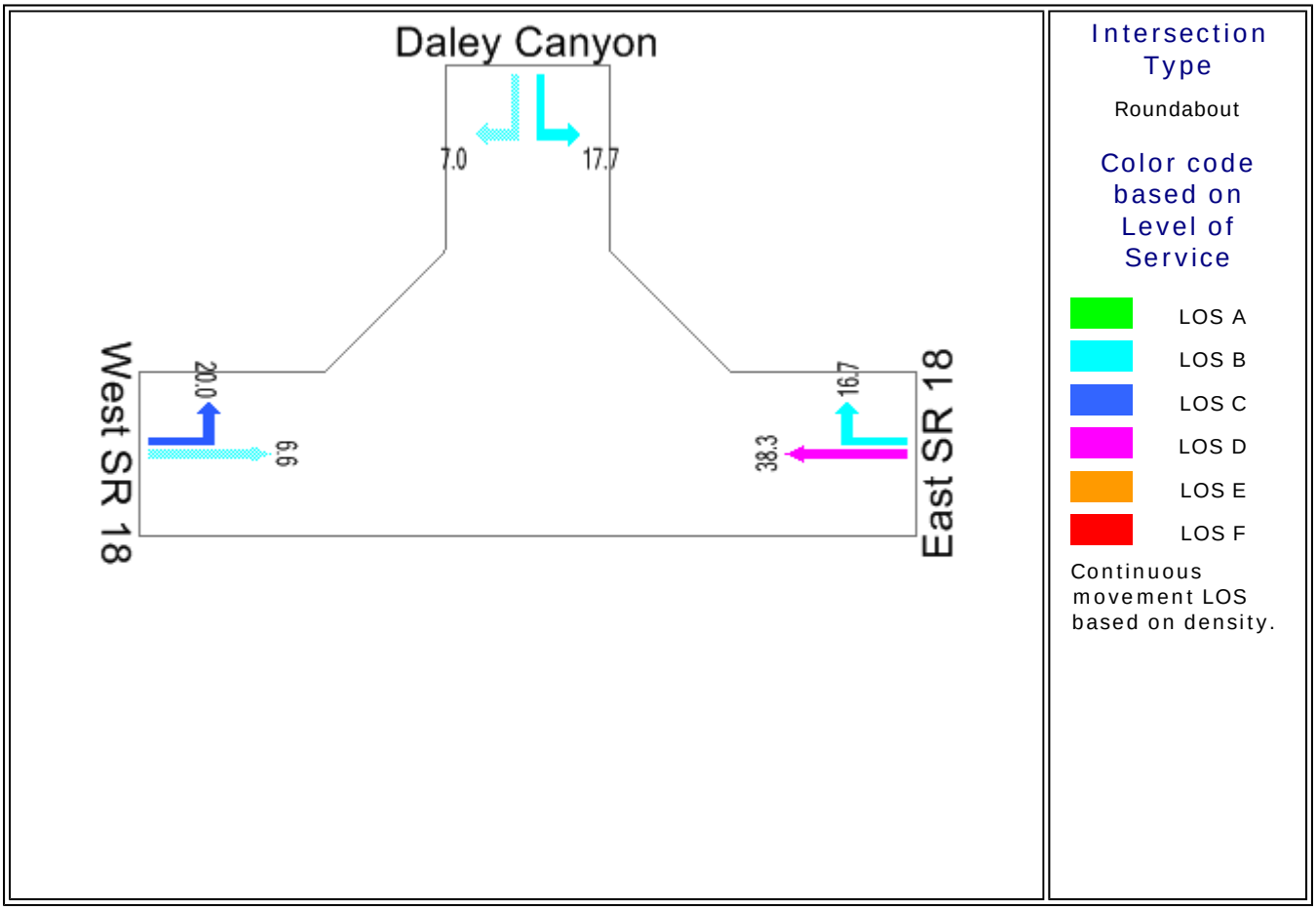

SIDRA SOLUTIONS

Site: 2030 Sat Peak - Base + Project
P:\P\05\05133-000 Royal Rangers\SIDRA\7-30-07 Revised 2030 volumes\East Roundabout - 2030.aap
Processed Jul 31, 2007 09:38:41AM

M0115, DKS, Small Office
Produced by SIDRA Intersection 3.1.061208.34
Copyright 2000-2006 Akcelik and Associates Pty Ltd
www.sidrasolutions.com

SIDRA INTERSECTION

Level of Service

Based on Delay (HCM method)

SR 18 and Daley Canyon

2030 Sat Peak East Roundabout - Base + Project

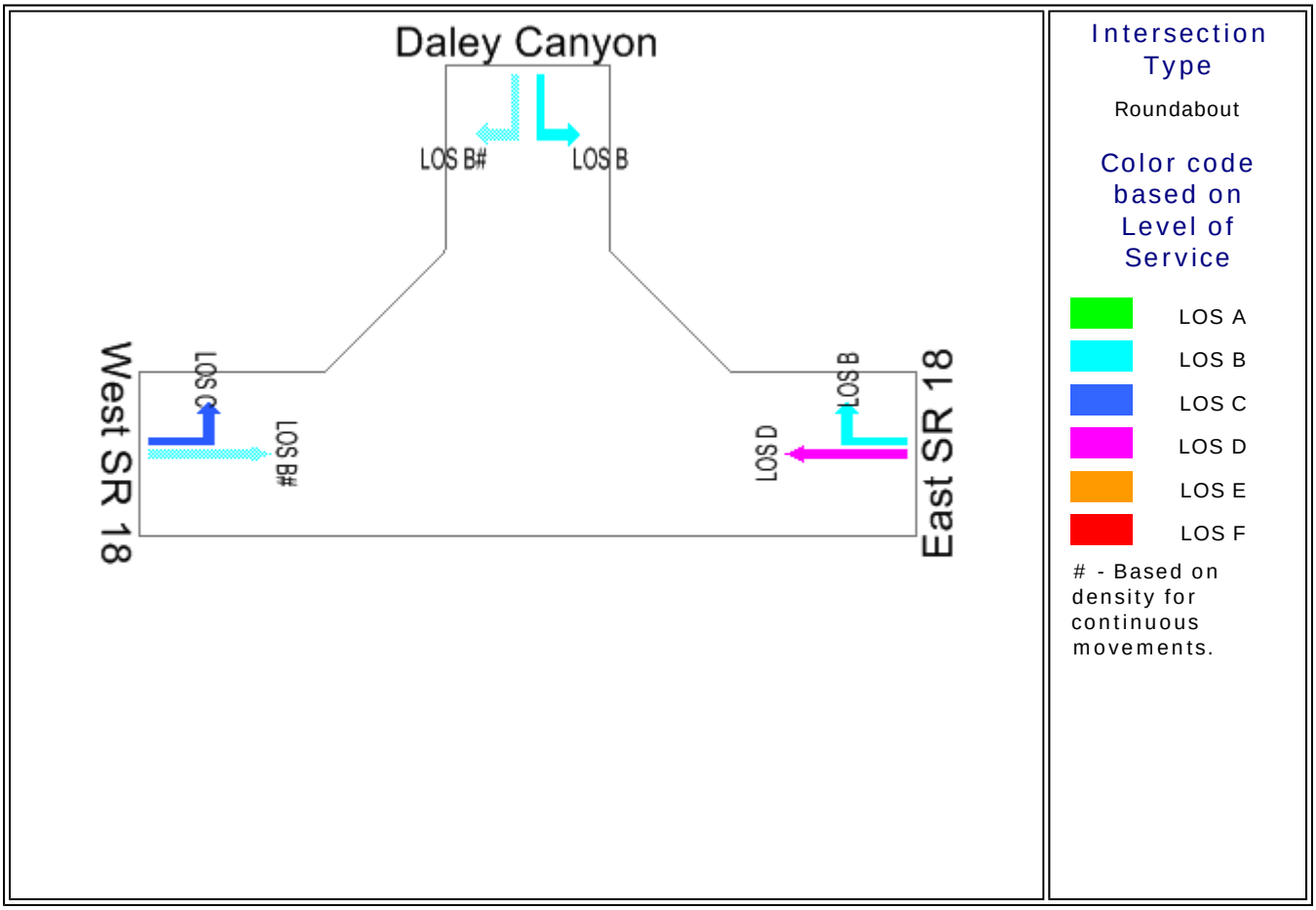

SIDRA SOLUTIONS

Site: 2030 Sat Peak - Base + Project
P:\P\05\05133-000 Royal Rangers\SIDRA\7-30-07 Revised 2030 volumes\East Roundabout - 2030.aap
Processed Jul 31, 2007 09:38:41AM

M0115, DKS, Small Office
Produced by SIDRA Intersection 3.1.061208.34
Copyright 2000-2006 Akcelik and Associates Pty Ltd
www.sidrasolutions.com

SIDRA INTERSECTION

Movement Summary

SR18, SR189, Lake Gregory Road

2030 Sunday Peak West Roundabout - Base + Project

Roundabout

Vehicle Movements

Mov ID	Turn	Dem Flow (veh/h)	%HV	Deg of Satn (v/c)	Aver Delay (sec)	Level of Service	95% Back of Queue (ft)	Prop. Queued	Eff. Stop Rate	Aver Speed (mph)
SR18 East										
6T	T	694	2.0	0.326	7.6	LOS A	57	0.38	0.57	31.9
6R	R	203	2.0	0.317	7.8	LOS A	29	0.34	0.55	31.7
Approach		897	2.0	0.326	7.6	LOS A	57	0.37	0.57	31.8
SR189										
17L	L	115	1.8	0.406	19.2	LOS B	60	0.70	0.96	26.2
14T	T	94	2.1	0.405	12.6	LOS B	60	0.70	0.89	29.2
14R	R	101	2.0	0.142	8.2	LOS A	13	0.32	0.60	31.7
Approach		309	1.9	0.406	13.6	LOS B	60	0.57	0.82	28.7
Lake Gregory Road										
7L	L	228	2.2	0.664	22.8	LOS C	138	0.81	1.07	24.5
4R	R	114	1.8	0.665	17.6	LOS B	138	0.81	1.04	26.4
Approach		342	2.0	0.663	21.1	LOS C	138	0.81	1.06	25.1
SR18 West										
5L	L	75	1.4	0.102	14.0	LOS B	15	0.48	0.74	28.7
Approach		74	1.4	0.102	14.0	LOS B	15	0.48	0.74	28.7
All Vehicles		1622	2.0	0.665	11.9	LOS B	138	0.51	0.73	29.4

Symbols which may appear in this table:

Following Degree of Saturation
x = 1.00 for Short Lane with resulting Excess Flow
* x = 1.00 due to minimum capacity

Following LOS
- Based on density for continuous movements

Following Queue
- Density for continuous movement

SIDRA SOLUTIONS

Site: 2030 Sun - Base + Project
P:\P\05\05133-000 Royal Rangers\SIDRA\7-30-07 Revised 2030 volumes\Roundabout - 2030.aap
Processed Jul 31, 2007 09:26:55AM

M0115, DKS, Small Office
Produced by SIDRA Intersection 3.1.061208.34
Copyright 2000-2006 Akcelik and Associates Pty Ltd
www.sidrasolutions.com

SIDRA INTERSECTION

Input Volumes

Total flow rates as given by the user (veh/60 min)

SR18, SR189, Lake Gregory Road

2030 Sunday Peak West Roundabout - Base + Project

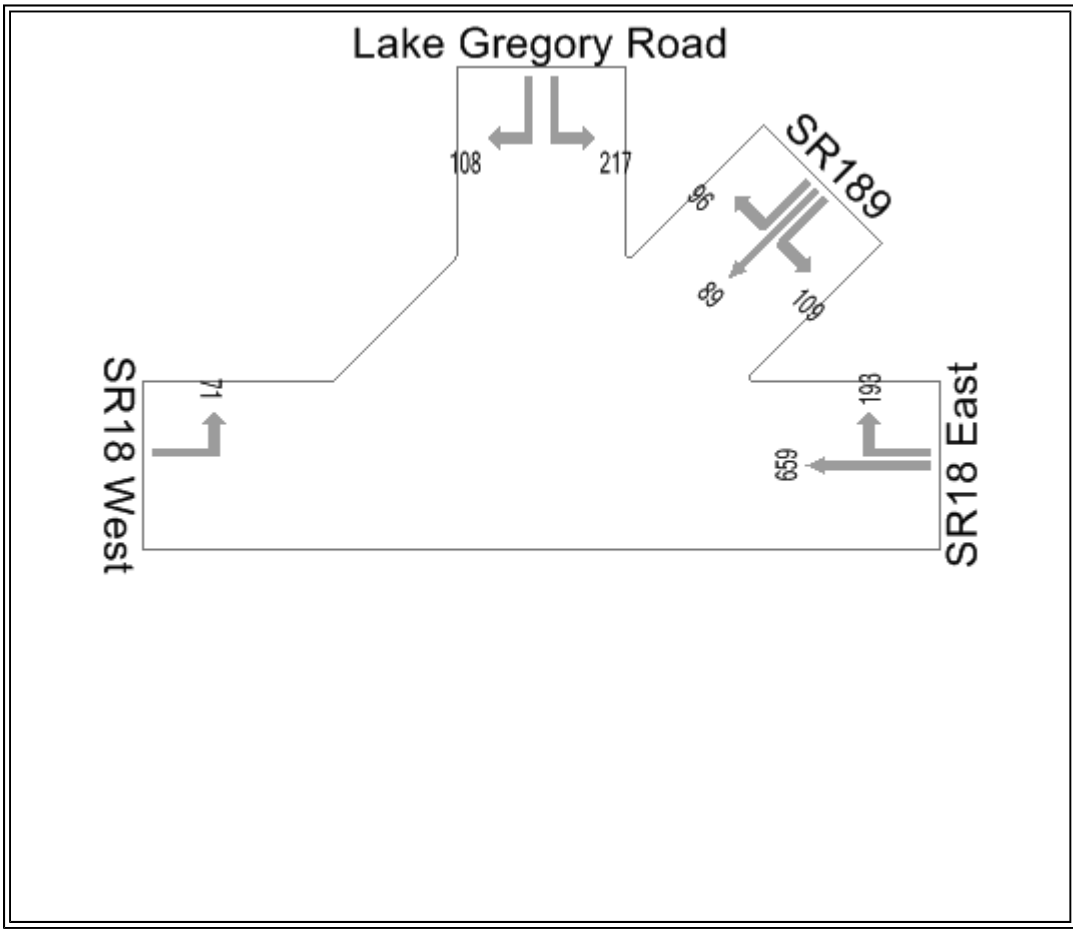

Intersection Type

Roundabout

No color code in this display

SIDRA SOLUTIONS

Site: 2030 Sun - Base + Project
P:\P\05\05133-000 Royal Rangers\SIDRA\7-30-07 Revised 2030 volumes\Roundabout - 2030.aap
Processed Jul 31, 2007 09:26:55AM

M0115, DKS, Small Office
Produced by SIDRA Intersection 3.1.061208.34
Copyright 2000-2006 Akcelik and Associates Pty Ltd
www.sidrasolutions.com

SIDRA INTERSECTION

Control Delay (Average)

Average control delay per vehicle (seconds)

SR18, SR189, Lake Gregory Road

2030 Sunday Peak West Roundabout - Base + Project

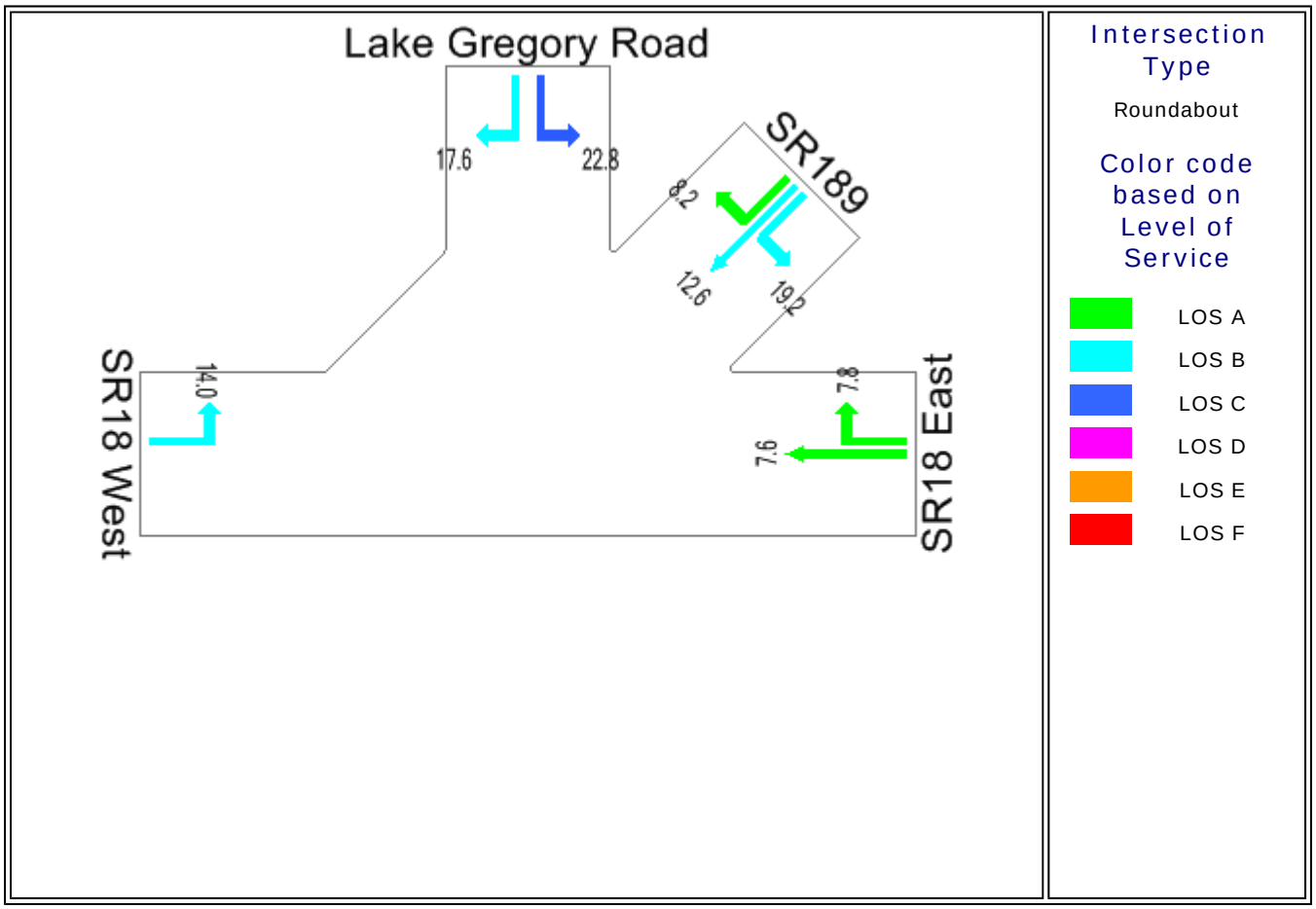

SIDRA SOLUTIONS

Site: 2030 Sun - Base + Project
P:\P\05\05133-000 Royal Rangers\SIDRA\7-30-07 Revised 2030 volumes\Roundabout - 2030.aap
Processed Jul 31, 2007 09:26:55AM

M0115, DKS, Small Office
Produced by SIDRA Intersection 3.1.061208.34
Copyright 2000-2006 Akcelik and Associates Pty Ltd
www.sidrasolutions.com

SIDRA INTERSECTION

Level of Service

Based on Delay (HCM method)

SR18, SR189, Lake Gregory Road

2030 Sunday Peak West Roundabout - Base + Project

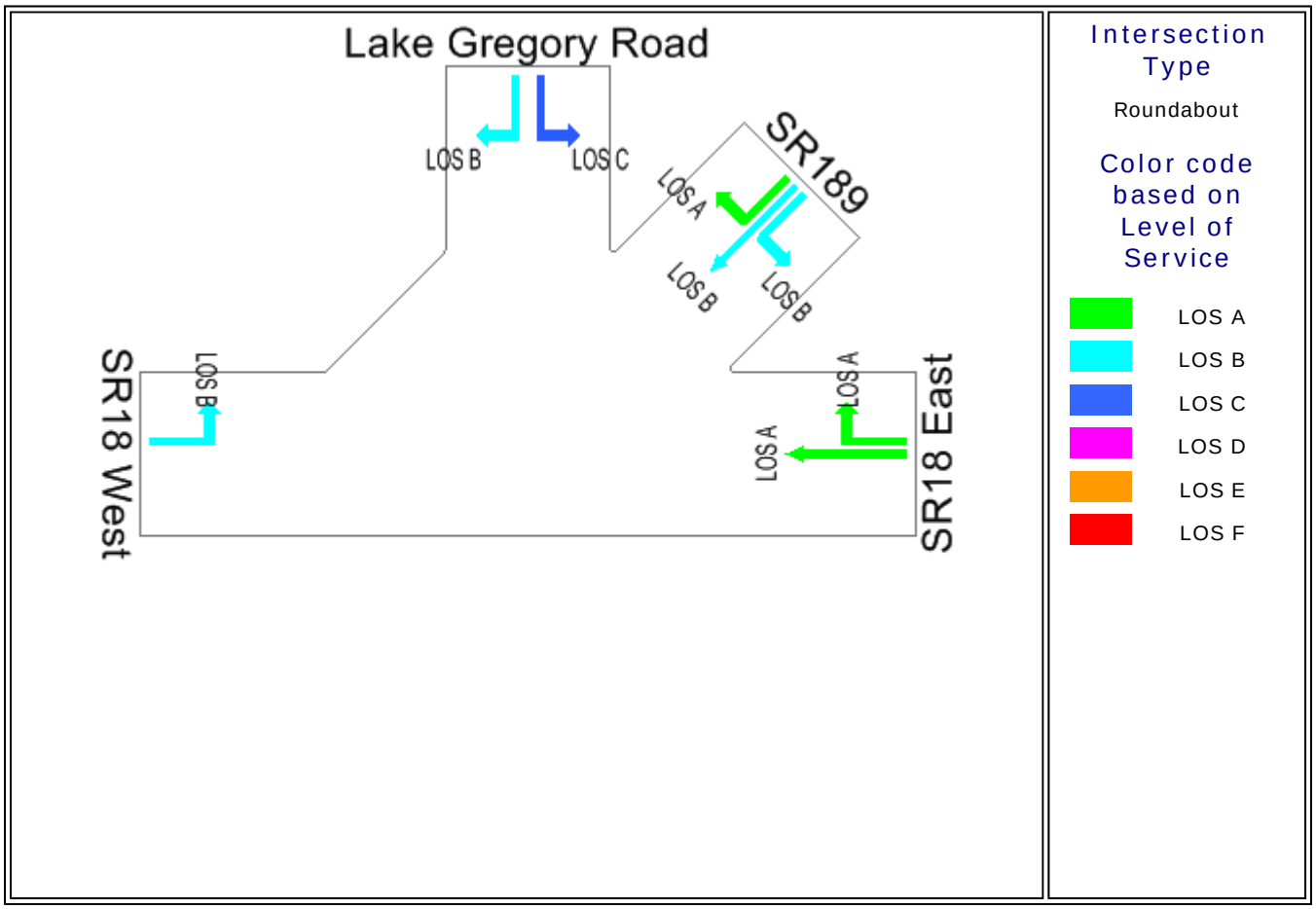

SIDRA SOLUTIONS

Site: 2030 Sun - Base + Project
P:\P\05\05133-000 Royal Rangers\SIDRA\7-30-07 Revised 2030 volumes\Roundabout - 2030.aap
Processed Jul 31, 2007 09:26:55AM

M0115, DKS, Small Office
Produced by SIDRA Intersection 3.1.061208.34
Copyright 2000-2006 Akcelik and Associates Pty Ltd
www.sidrasolutions.com

SIDRA INTERSECTION

Movement Summary

SR 18 and Daley Canyon

2030 Sun Peak East Roundabout - Base + Project

Roundabout

Vehicle Movements

Mov ID	Turn	Dem Flow (veh/h)	%HV	Deg of Satn (v/c)	Aver Delay (sec)	Level of Service	95% Back of Queue (ft)	Prop. Queued	Eff. Stop Rate	Aver Speed (mph)
East SR 18										
6T	T	526	2.1	0.887	29.0	LOS C	436	1.00	1.35	21.6
6R	R	271	1.9	0.455	12.9	LOS B	104	0.82	0.91	29.0
Approach		797	2.0	0.887	23.5	LOS C	436	0.94	1.20	23.7
Daley Canyon										
7L	L	334	2.1	0.571	19.8	LOS B	154	0.89	1.02	25.7
4R	R	801	2.0	0.422	7.1	LOS C#	20#	0.00	0.56	33.2
Approach		1135	2.0	0.571	10.8	LOS B	154	0.26	0.70	30.5
West SR 18										
5L	L	529	2.1	0.690	18.8	LOS B	237	0.88	0.95	26.2
2T	T	484	2.1	0.255	6.6	LOS B#	12#	0.00	0.53	33.5
Approach		1014	2.1	0.690	13.0	LOS B	237	0.46	0.75	29.2
All Vehicles		2946	2.0	0.887	15.0	LOS B	436	0.51	0.85	27.9

Symbols which may appear in this table:

Following Degree of Saturation
x = 1.00 for Short Lane with resulting Excess Flow
* x = 1.00 due to minimum capacity

Following LOS
- Based on density for continuous movements

Following Queue
- Density for continuous movement

SIDRA SOLUTIONS

Site: 2030 Sun Peak - Base + Project
P:\P\05\05133-000 Royal Rangers\SIDRA\7-30-07 Revised 2030 volumes\East Roundabout - 2030.aap
Processed Jul 31, 2007 09:25:59AM

M0115, DKS, Small Office
Produced by SIDRA Intersection 3.1.061208.34
Copyright 2000-2006 Akcelik and Associates Pty Ltd
www.sidrasolutions.com

SIDRA INTERSECTION

Input Volumes

Total flow rates as given by the user (veh/60 min)

SR 18 and Daley Canyon

2030 Sun Peak East Roundabout - Base + Project

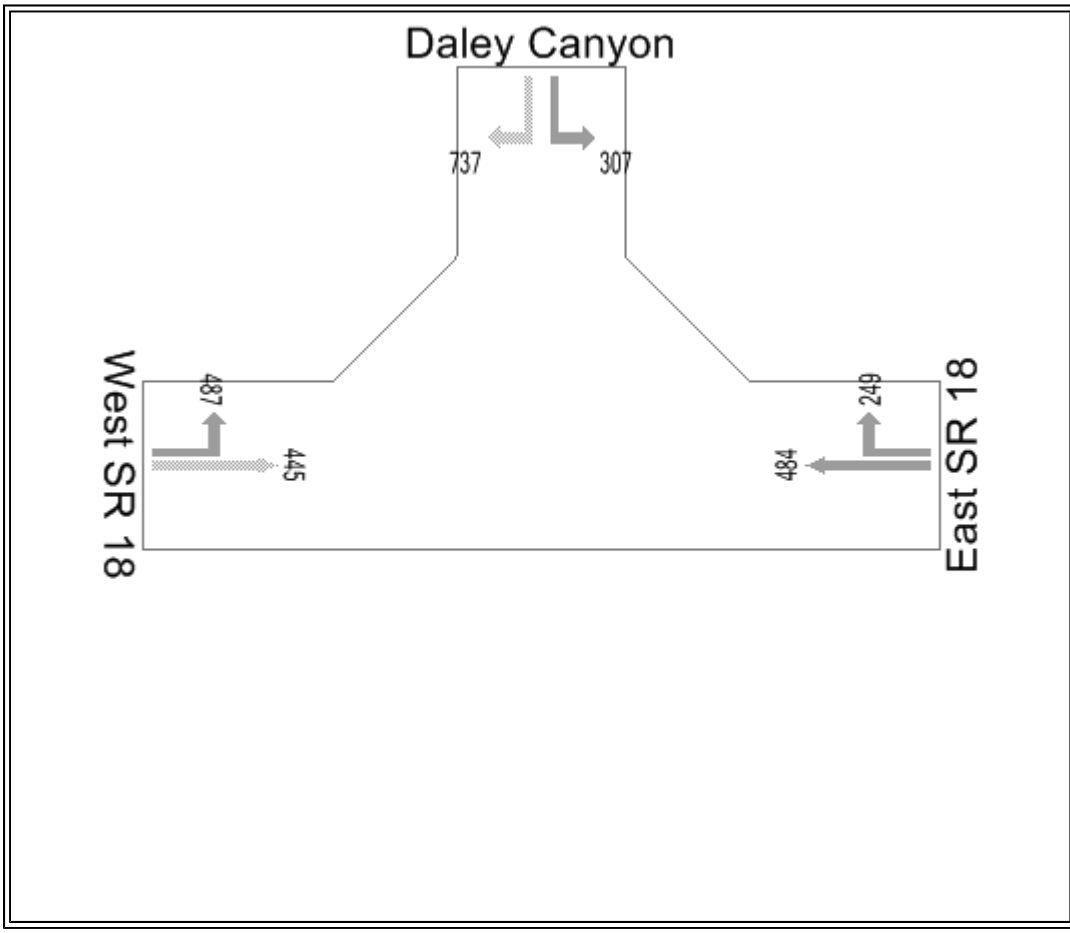

Intersection Type

Roundabout

No color code in this display

SIDRA SOLUTIONS

Site: 2030 Sun Peak - Base + Project
P:\P\05\05133-000 Royal Rangers\SIDRA\7-30-07 Revised 2030 volumes\East Roundabout - 2030.aap
Processed Jul 31, 2007 09:25:59AM

M0115, DKS, Small Office
Produced by SIDRA Intersection 3.1.061208.34
Copyright 2000-2006 Akcelik and Associates Pty Ltd
www.sidrasolutions.com

SIDRA INTERSECTION

Control Delay (Average)

Average control delay per vehicle (seconds)

SR 18 and Daley Canyon

2030 Sun Peak East Roundabout - Base + Project

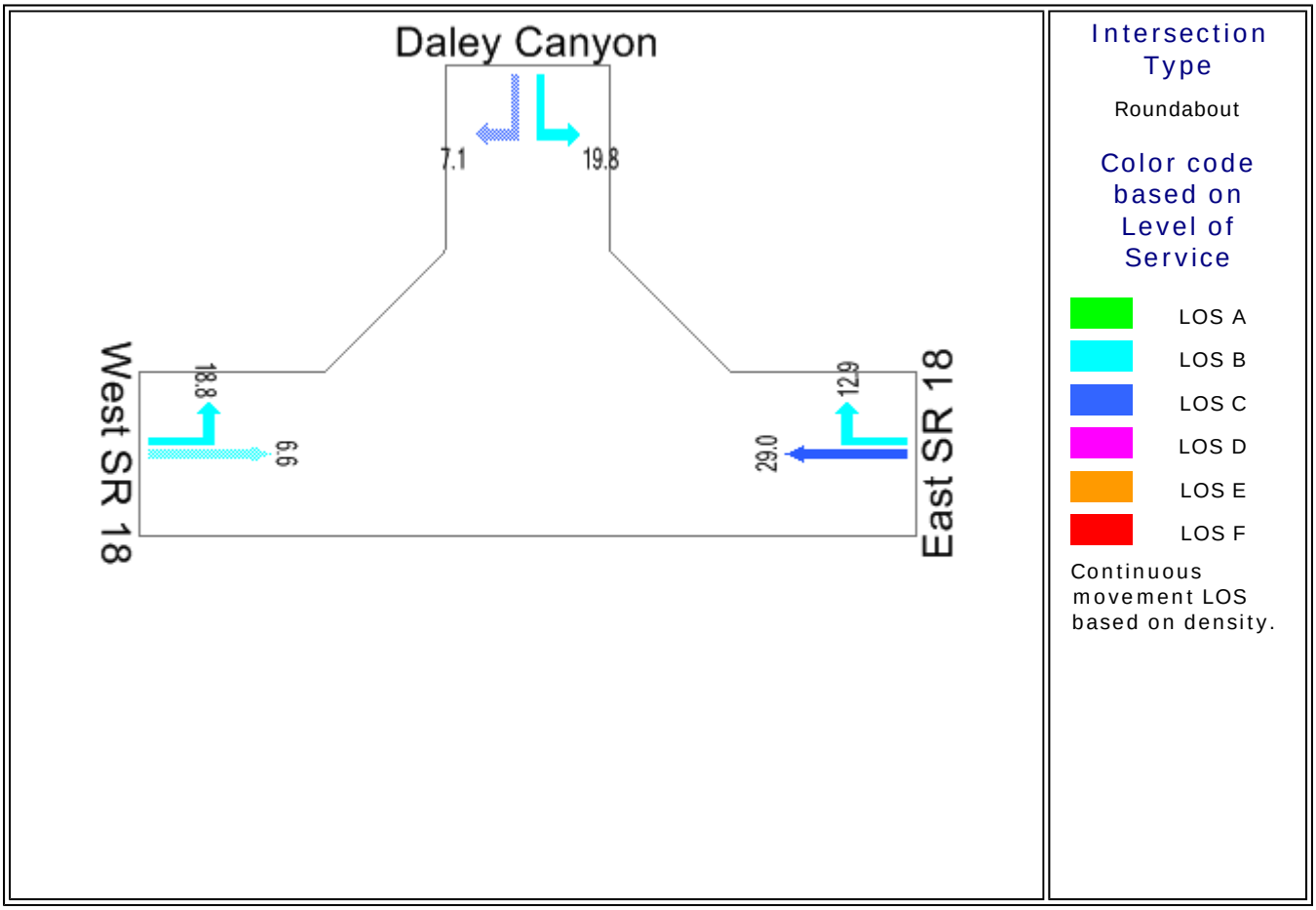

SIDRA SOLUTIONS

Site: 2030 Sun Peak - Base + Project
P:\P\05\05133-000 Royal Rangers\SIDRA\7-30-07 Revised 2030 volumes\East Roundabout - 2030.aap
Processed Jul 31, 2007 09:25:59AM

M0115, DKS, Small Office
Produced by SIDRA Intersection 3.1.061208.34
Copyright 2000-2006 Akcelik and Associates Pty Ltd
www.sidrasolutions.com

SIDRA INTERSECTION

Level of Service

Based on Delay (HCM method)

SR 18 and Daley Canyon

2030 Sun Peak East Roundabout - Base + Project

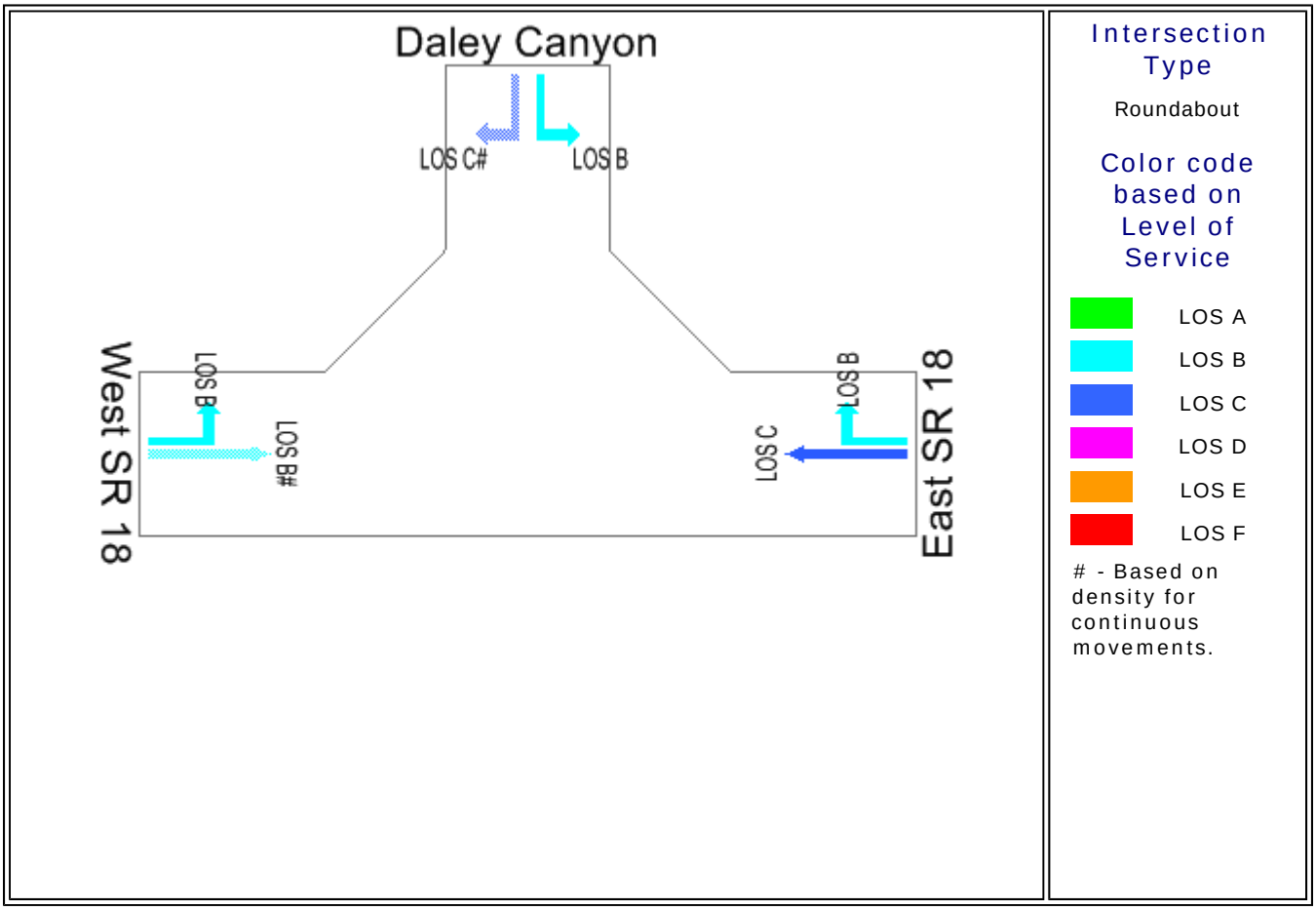

SIDRA SOLUTIONS

Site: 2030 Sun Peak - Base + Project
P:\P\05\05133-000 Royal Rangers\SIDRA\7-30-07 Revised 2030 volumes\East Roundabout - 2030.aap
Processed Jul 31, 2007 09:25:59AM

M0115, DKS, Small Office
Produced by SIDRA Intersection 3.1.061208.34
Copyright 2000-2006 Akcelik and Associates Pty Ltd
www.sidrasolutions.com

APPENDIX I

MOUNTAIN TRAVEL MODEL

SANBAG 2000 Model Results
Sunday Summer AM Volumes

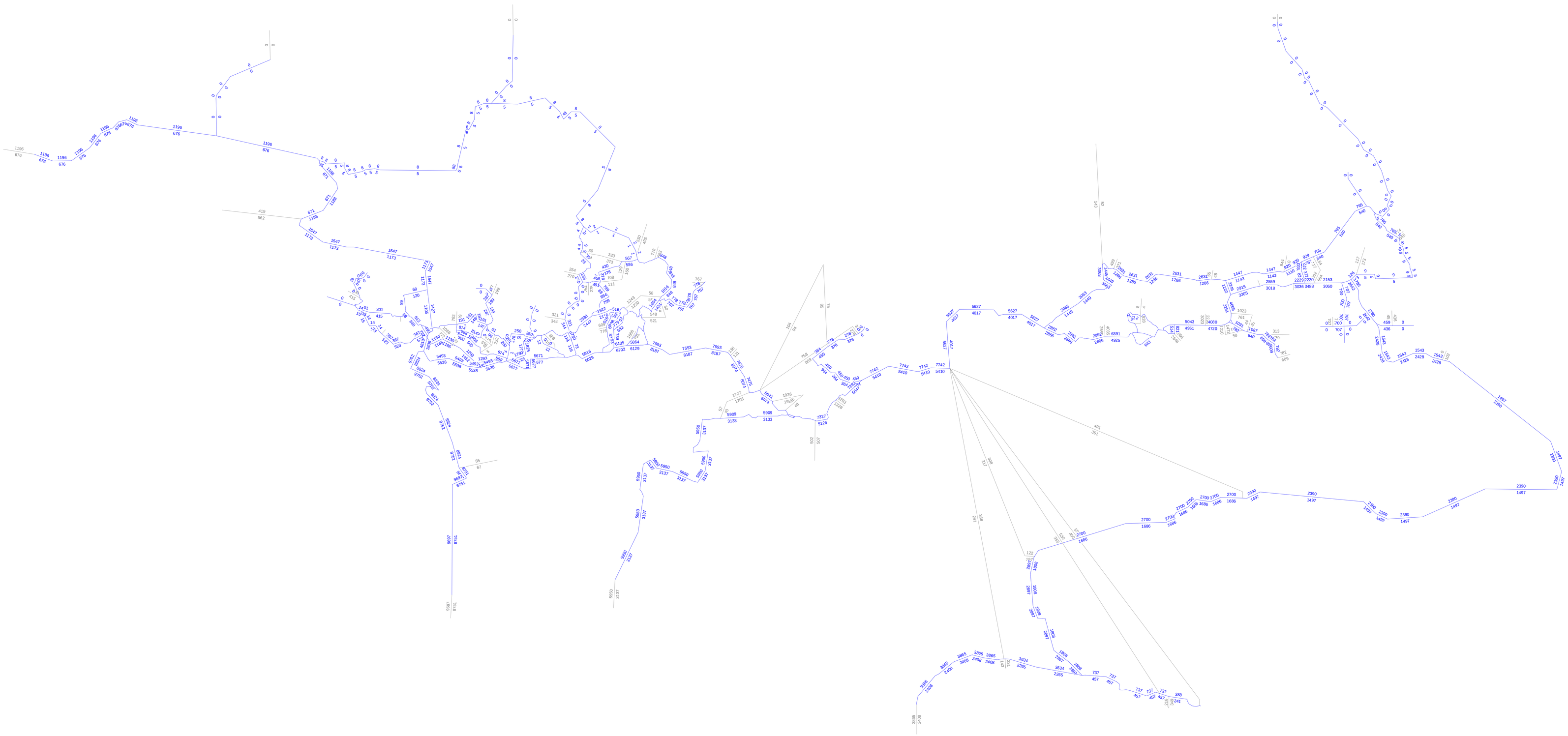

Licensed to LSA Associates, Inc.

SANBAG 2000 Model Results
Sunday Summer PM Volumes

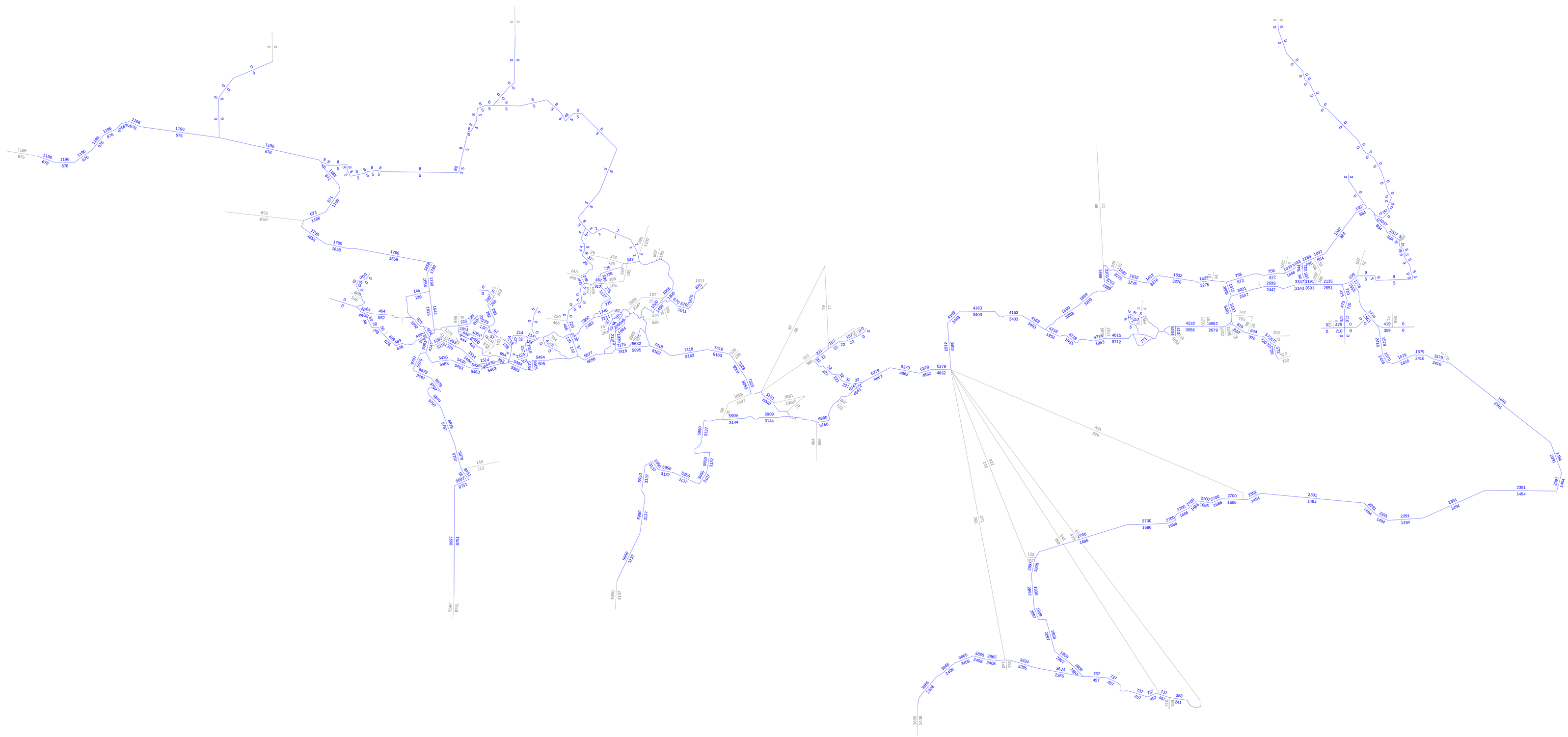

Licensed to LSA Associates, Inc.

SANBAG 2030 Model Results
Sunday Summer AM Volumes

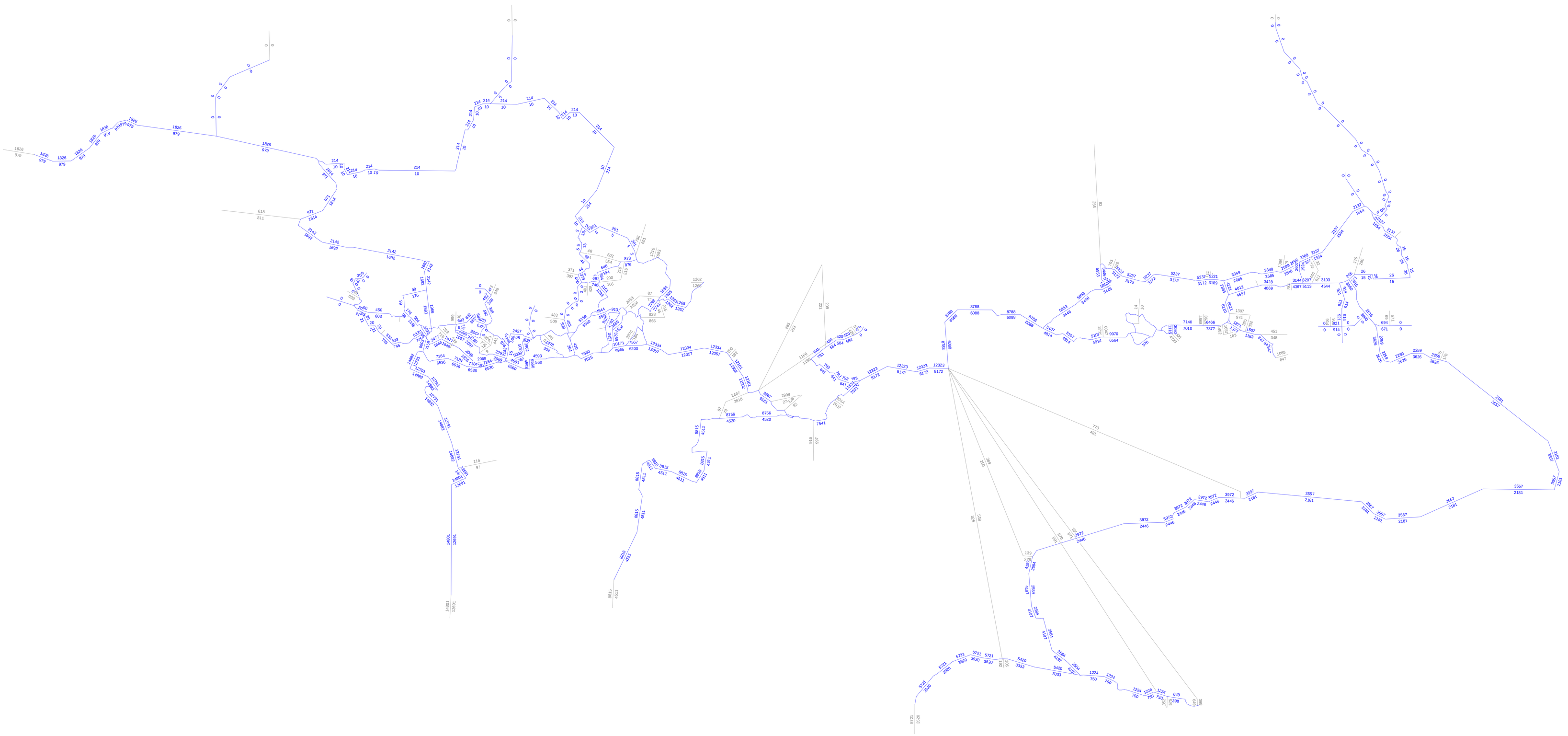

Licensed to LSA Associates, Inc.

SANBAG 2030 Model Results
Sunday Summer PM Volumes

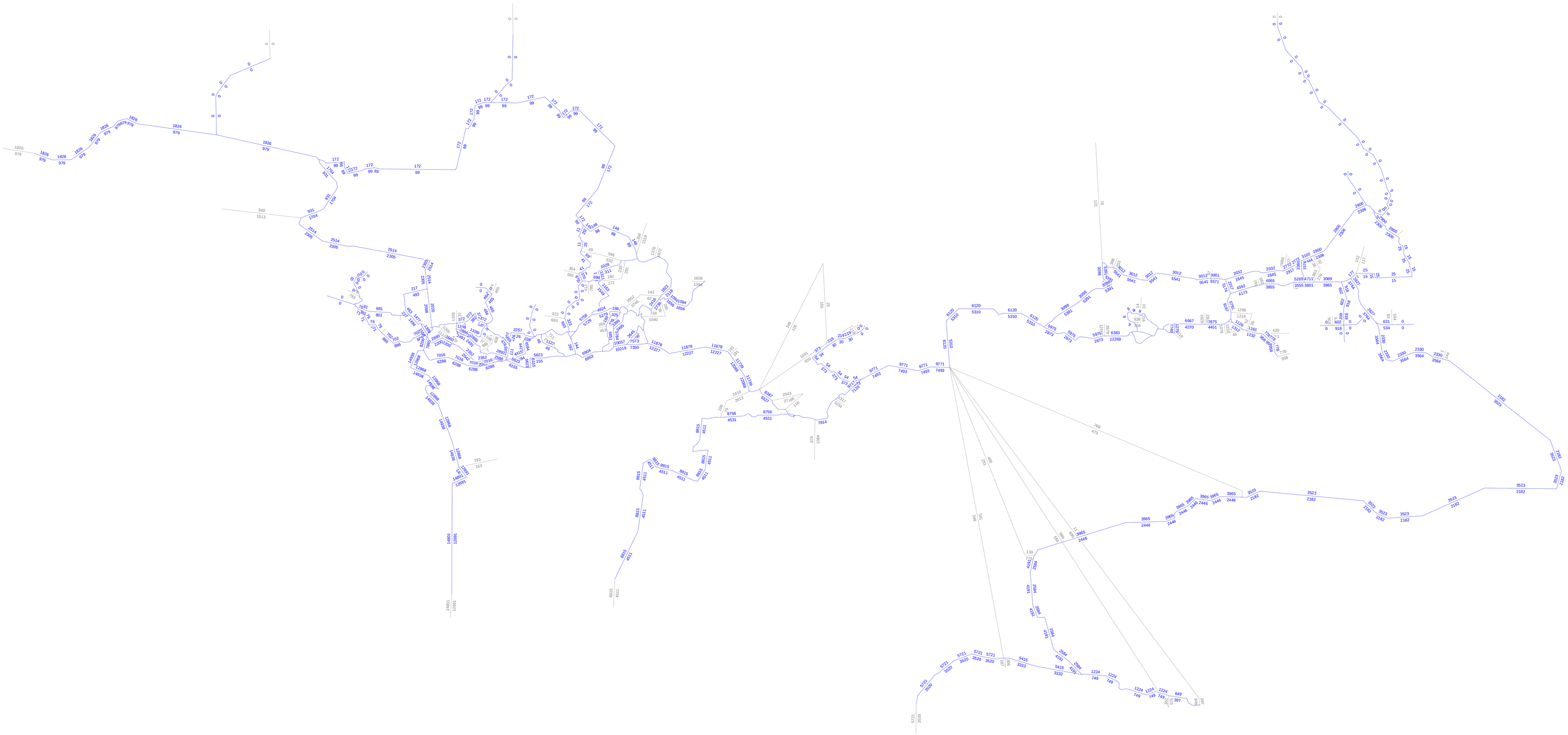

Licensed to LSA Associates, Inc.

LSA Associates, Inc.

Supplemental Correspondence

March 30, 2010

LSA

LSA ASSOCIATES, INC.
1500 IOWA AVENUE, SUITE 200
RIVERSIDE, CALIFORNIA 92507

951.781.9310 TEL
951.781.4277 FAX

OTHER OFFICES:
IRVINE
PT. RICHMOND
SAN LUIS OBISPO
PALM SPRINGS
FORT COLLINS

BERKELEY
ROCKLIN
SOUTH SAN FRANCISCO
CARLSBAD
FRESNO

MEMORANDUM

DATE: March 30, 2010

TO: Patrick Hopkins, Church of the Woods

FROM: Sandipan Bhattacharjee, AICP, LSA Associates, Inc.

SUBJECT: Opening Year Traffic Conditions for the Church of the Woods

The traffic analysis for the Church of the Woods project included the following scenarios:

- Existing Conditions;
- 2009 Opening Year Conditions;
- 2013 Project Build out Conditions; and
- Future (2030) Conditions.

The 2009 analysis conditions included partial build-out of the project with full build-out occurring in 2013. Therefore, both the 2013 and 2030 analyses are based on the trips associated with the build out of the development. As a result, the year 2013 and 2030 conditions generate higher traffic than the 2009 conditions. Compared to 2009 conditions, the year 2013 represents the worst case traffic conditions for the proposed project.

Therefore, removing the 2009 opening year from the draft Environmental Impact Report (DEIR) would not affect the results or conclusions of the traffic impact analysis.

Appendix I

Global Climate Change Technical Study

PCR Services Corporation

Global Climate Change Technical Study

August 6, 2009

GLOBAL CLIMATE CHANGE TECHNICAL STUDY

IN SUPPORT OF THE

DRAFT
ENVIRONMENTAL IMPACT REPORT

FOR

THE CHURCH OF THE WOODS DEVELOPMENT

Prepared by:
PCR Services Corporation
55 South Lake Avenue, Suite 215
Pasadena, CA, 91107
Contact: Heidi Rous, CPP, Principal
(626) 204-6170

August 6, 2009

TABLE OF CONTENTS

1.0 EXECUTIVE SUMMARY 1

2.0 INTRODUCTION.....2

3.0 EXISTING CONDITIONS 3
3.1 Environmental Setting.....3
3.1.1 National.....4
3.1.2 State.....4
3.2 Regulatory Framework 4
3.2.1 International 4
3.2.2 National.....5
3.2.3 State.....5
3.2.4 Regional 8
3.2.3 County.....8

4.0 PROJECT IMPACTS 10
4.1 Thresholds of Significance.....10
4.2 Methodology 12
4.2.1 Business as Usual Scenario.....12
4.2.2 Proposed Project 13
4.2.3 Standard Conditions of Approval 13
4.2.4 Mitigation Measures 15
4.3 Project Impacts.....20

5.0 CUMULATIVE IMPACTS 23

6.0 CONCLUSION 24

APPENDICES

APPENDIX A: GREENHOUSE GAS EMISSIONS

APPENDIX B: LSA AIR QUALITY ANALYSIS, JULY 2008

LIST OF TABLES

Table **Page**

Table 1 GHG Atmospheric Lifetimes and GWP Values.....3
Table 2 Consistency with Applicable California Climate Action Team Report Strategies.....19
Table 3 Operational Greenhouse Gas Emissions.....21

1.0 EXECUTIVE SUMMARY

This report provides an analysis of potential impacts to global climate related to the proposed Church of the Woods (project), located in unincorporated San Bernardino County. Greenhouse gas (GHG) emissions were calculated for both the construction and operation of the project. The findings of the GHG analysis are as follows:

- The project would result in a 31 percent reduction in GHG emissions as compared to "business as usual."
    - Construction of the project would result in a temporary and incremental increase in GHG emissions.
    - Project operation would result in GHG emissions; however, the project is a less intensive use of the land than what is considered "business as usual." Moreover, the mitigation measures associated with the project are predicted to reduce the project's GHG emissions profile.
- The project's design is consistent with AB32 and the Climate Action Team (CAT) recommendations, and as such supports the State's goal to reduce GHG emissions. In addition, the proposed project would result in GHG emissions lower than the most stringent screening level proposed by a regulatory agency with potential jurisdiction over this project, the South Coast Air Quality Management District (SCAQMD). Accordingly, the project results in a cumulatively less than significant impact with respect to Global Climate Change.

2.0 INTRODUCTION

The Church of the Woods proposes to develop a 38 acre campus located in unincorporated San Bernardino County. The project would include an 87,768 square foot worship facility and two playing fields. The project is expected to be fully operational by 2013, while one preliminary phase would become operational prior to that date. During operation, church would accommodate 1,200 people.

Potential impacts to global climate were determined by estimating GHG emissions using the methodology put forth by the California Climate Action Registry (CCAR), as well as accepted GHG emission factors. This report is divided into the following sections:

- Section 1, Executive Summary
- Section 2, Introduction
- Section 3, Existing Conditions
- Section 4, Project Impacts
- Section 5, Cumulative Impacts
- Section 6, Conclusion

3.0 EXISTING CONDITIONS

3.1 ENVIRONMENTAL SETTING

GHGs include carbon dioxide (CO_2), methane (CH_4), ozone (O_3), water vapor, nitrous oxide (N_2O), hydrofluorocarbons (HFCs), perfluorocarbons (PFCs), and sulfur hexafluoride (SF_6). CO_2 is the most abundant GHG in the atmosphere. GHGs are the result of both natural and anthropogenic activities. Forest fires, decomposition, industrial processes, landfills, and consumption of fossil fuels for power generation, transportation, heating, and cooking are the primary sources of GHG emissions.

Table 1

GHG Atmospheric Lifetimes and GWP Values

GHG	Atmospheric Lifetime	GWP* (100 Year Horizon)
CO2	50-200	1
CH4	12±3	21
N2O	120	310
HFCs		
HFC-23	264	11,700
HFC-134a	14.6	1,300
HFC-152a	1.5	140
PFCs		
PFC: Tetrafluoromethane	50,000	6,500
PFC: Hexafluoroethane	10,000	9,200
SF6	3,200	23,900

** Compared to the same quantity of CO2 emissions.*

Source: USEPA, 2006.

Not all GHGs exhibit the same ability to induce climate change; as a result, GHG contributions are commonly quantified in the equivalent mass of CO_2, denoted as CO_2e. Mass emissions are calculated by converting pollutant specific emissions to CO_2e emissions by applying the proper global warming potential (GWP) value.[1] A GHG's GWP value is its relative ability to trap heat in the atmosphere, as compared to CO_2. GWP takes into account a GHG's radiative forcing effect, as well as its lifetime in the atmosphere. These GWP values are available from the United States Environmental Protection Agency (USEPA) and published in the CCAR General Reporting Protocol (GRP). GHGs and their GWP values are summarized

[1] *CO_2e was developed by the Intergovernmental Panel on Climate Change (IPCC), and published in its Second Assessment Report (SAR) 1996.*

above in Table 1. By applying the GWP ratios, project related CO_2e emissions can be tabulated in metric tons per year. The CO_2e values are calculated for construction years and project buildout conditions in order to generate the estimated increase in GHG emissions for construction and operation.

3.1.1 National

A 2007 USEPA study of trends in GHG emissions estimated that between 1990 and 2005, United States net GHG emissions rose by 15 percent, from 5.4 billion tons of CO_2e emitted in 1990 to 6.2 billion tons in 2006. CO_2 is the largest constituent of GHGs emitted in the United States, and the majority of these emissions originate from the burning of fossil fuels.[2]

3.1.2 State

According to the 2007 CARB GHG Inventory,[3] California's net GHG emissions increased 12 percent between 1990 and 2004, from 427 to 480 million metric tons of CO_2e. California represents less than seven percent of US GHG emissions. According to the California Energy Commission (CEC), fossil fuel consumption in California represents approximately 81 percent of GHG emissions, and transportation represents approximately 41 percent of all GHG emissions.[4]

3.2 REGULATORY FRAMEWORK

3.2.1 International

The United Nations Framework Convention on Climate Change (UNFCCC) is the international environmental treaty dealing with climate change, which was developed at the Earth Summit in Rio de Janeiro, Brazil, in 1992. Since the treaty went into effect in 1994, parties to the UNFCCC have met annually in Conferences of the Parties to assess progress in dealing with climate change. The Kyoto Protocol, an amendment to this treaty, was adopted by the third Conference of the Parties (COP-3) in 1997 in Kyoto and came into force in 2005. The goal of the Kyoto Protocol is to "stabilize GHG concentrations in the atmosphere at a level that would prevent dangerous anthropogenic interference with the climate system." As of September 2007, the Protocol had been signed and ratified by 175 parties. The United States government, though a signatory, has not ratified the Protocol. The United States held that the Protocol,

---

[2] *USEPA, Inventory of US GHG Emissions and Sinks: 1990-2006, Chapter 2: Trends in GHG Emissions, 2008.*

[3] *CARB, Draft Updated California Greenhouse Gas Emissions Estimates: Summary Table, 2007.* .

[4] *California Energy Commission, Inventory of California Greenhouse Gas Emissions and Sinks: 1990 to 2004, 2006.*

although non-binding, would be economically crippling, and opposed the exemption granted to China and other developing countries. Under the protocol, participating industrialized countries must reduce their GHG emissions by a collective average of five percent below their 1990 levels by 2012. However, the Protocol lacks a strong enforcement mechanism. The Protocol will expire in 2012.

3.2.2 National

There has been activity at the federal level with respect to the regulation of GHGs. In Massachusetts v. Environmental Protection Agency (Docket No. 05–1120), argued November 29, 2006 and decided April 2, 2007, the U.S. Supreme Court held that not only did the USEPA have authority to regulate greenhouse gases, but the USEPA's reasons for not regulating this area did not fit the statutory requirements. As such, the U.S. Supreme Court ruled that the USEPA should be required to regulate CO_2 and other greenhouse gases as pollutants under the federal Clean Air Act (CAA). EPA began the process of regulating greenhouse gases under the CAA in April 2009.

3.2.3 State

In response to growing scientific and political concern regarding global climate change, California has recently adopted a series of laws to reduce both the level of GHGs in the atmosphere and to reduce emissions of GHGs from commercial and private activities within the State. In September 2002, Governor Gray Davis signed Assembly Bill (AB) 1493, requiring the development and adoption of regulations to achieve “the maximum feasible reduction of greenhouse gases” emitted by noncommercial passenger vehicles, light-duty trucks, and other vehicles used primarily for personal transportation in the State. It should be noted that setting emission standards on automobiles is solely the responsibility of the USEPA. The federal CAA allows States to set state-specific emission standards on automobiles if they first obtain a waiver from the USEPA. The USEPA denied California’s request for a waiver, thus delaying the CARB’s proposed implementation schedule for setting emission standards on automobiles to help reduce GHGs.

In June 2005, Governor Schwarzenegger signed Executive Order S-3-05, which established GHG emissions targets for the state, as well as a process to ensure the targets are met. The order directed the Secretary for California EPA to report every two years on the State’s progress toward meeting the Governor’s GHG emission reduction targets. As a result of this executive order, the (CAT), led by the Secretary of the California EPA, was formed. The CAT is made up of representatives from a number of State agencies and was formed to implement global warming emission reduction programs and reporting on the progress made toward meeting statewide targets established under the Executive Order. State agency members include the Business, Transportation and Housing Agency; Department of Food and Agriculture; Resources Agency; Air Resources Board; California Energy Commission; the Public Utilities Commission; and Department of Water Resources. The CAT published its *Climate Action Team Report to*

Governor Schwarzenegger and the Legislature in March 2006, in which it laid out forty-six (46) specific emission reduction strategies for reducing GHG emissions and reaching the targets established in the executive order.

In September 2006, Governor Arnold Schwarzenegger signed the California Global Warming Solutions Act of 2006, also known as AB32, into law. AB32 commits the State to achieving the following:

- 2000 GHG emission levels by 2010 (a reduction of approximately 11 percent below "business as usual" [BAU])[5]
- 1990 levels by 2020 (25 percent below business as usual)
- 80 percent below 1990 levels by 2050

To achieve these goals, AB32 mandates that CARB establish a quantified emissions cap, institute a schedule to meet the cap, implement regulations to reduce Statewide GHG emissions from stationary sources, and develop tracking, reporting, and enforcement mechanisms to ensure that reductions are achieved. The following schedule outlines the CARB actions mandated by AB32:

- By January 1, 2008, CARB adopts regulations for mandatory (GHG) emissions reporting, defines 1990 emissions baseline for California (including emissions from imported power), and adopts it as the 2020 statewide cap.[6] CARB has yet to finalize these regulations.
- By January 1, 2009, CARB adopts plan to effect GHG reductions from significant sources of GHG via regulations, market mechanisms and other actions
- During 2009, CARB drafts rule language to implement its plan and holds a series of public workshop on each measure (including market mechanisms).
- By January 1, 2010, early action measures will take effect.
- During 2010, CARB, after workshops and public hearings, conducts series of rulemakings to adopt GHG regulations including rules governing market mechanisms.

[5] *"Business as usual" refers to a scenario in which no GHG reduction measures are implemented.*

[6] *CARB has to date not adopted any such regulations.*

- By January 1, 2011, CARB completes major rulemakings for reducing GHGs, including market mechanisms. CARB may revise and adopt new rules after January 1, 2011 to achieve the 2020 goal.

- By January 1, 2012, GHG rules and market mechanisms adopted by CARB take effect and become legally enforceable.

- December 31, 2020 is the deadline for achieving 2020 GHG emissions cap.

A companion bill to AB32, Senate Bill (SB) 1368, requires the California Public Utilities Commission (PUC) and CEC to establish GHG emission performance standards for the generation of electricity. These standards will also apply to power that is generated outside of California and imported into the State. CARB's list of discrete early action measures that can be adopted and implemented before January 1, 2010 was approved on June 21, 2007, and focuses on major State-wide contributing sources and industries, not on individual development projects or practices. These early action measures are: 1) a low-carbon fuel standard; 2) reduction of refrigerant losses from motor vehicle air conditioning system maintenance; and 3) increased methane capture from landfills. Recently, the CARB released emissions inventory estimates for 1990 through 2004.

An additional bill related to AB32, SB 97, requires the Governor's Office of Planning and Research (OPR), by July 1, 2009, to prepare, develop, and transmit to the Resources Agency guidelines for the feasible mitigation of greenhouse gas emissions or the effects of greenhouse gas emissions, as required by the California Environmental Quality Act (CEQA), including but not limited to, effects associated with transportation or energy consumption. CARB prepared a Scoping Plan to develop programs and measures to address the remaining 107 million tons of CO_2e in order to reach the total of 173 million tons by 2020. The Scoping Plan was submitted to the Board in November of 2008 and approved on December 11, 2008.

On December 6, 2007, the California Air Resources Board adopted a statewide GHG emissions limit. The limit is 427 million metric tons of carbon dioxide equivalents (MMTCO_2e), which CARB found to be the 1990 GHG emissions level.[7] CARB held open the possibility of changing the limit "if additional information becomes available that would significantly change the 1990 […] level."[8]

CARB has also promulgated GHG emission reporting and verification requirements to implement the law. A post-adoption public comment period on CARB's "Regulation for the Mandatory Reporting of Greenhouse Gas Emissions" closed on June 5, 2008. This regulation

[7] *See California Air Resources Board, California 1990 Greenhouse Gas Emissions Level and 2020 Limit, http://www.arb.ca.gov/cc/inventory/1990level/1990level.htm.*

[8] *CARB Resolution 07-55, December 6, 2007.*

requires GHG emissions reporting to be verified by CARB-accredited verifiers beginning with reports submitted in 2010 (for 2009 emissions).

3.2.4 Regional

There is no regional agency responsible for the regulation of GHG emissions related to global climate change. The South Coast Air Quality Management District (SCAQMD) is the agency principally responsible for comprehensive air pollution control in the Basin. Although the SCAQMD is responsible for regional air quality planning efforts, it does not have the authority to directly regulate factors leading to global climate change or GHG emission issues associated with plans and new development projects throughout the SCAB.

In order to provide GHG emission analysis guidance to the local jurisdictions within the SCAB, the SCAQMD has organized a Working Group to develop GHG emission analysis guidance and thresholds.

SCAQMD released a draft guidance document regarding interim CEQA GHG significance thresholds in October 2008. SCAQMD proposed a tiered approach, whereby the level of detail and refinement needed to determine significance increases with a project's total GHG emissions. SCAQMD also proposed a screening level of 3,000 metric tons per year for commercial or residential projects, under which project impacts are considered "less than significant." The 3,000 metric ton screening level was intended "to achieve the same policy objective of capturing 90 percent of the GHG emissions from new development projects in the residential/commercial sectors." For projects with GHG increases greater than 3,000 metric tons per year, the use of a percent emission reduction target (e.g., 30 percent) was proposed to determine significance. This emission reduction target is a reduction below what is considered "business as usual." SCAQMD also proposes that projects amortize construction emissions over the 30-year lifetime of any given project. Project construction emissions can be amortized by calculating total construction period emissions and dividing by the 30-year lifetime of the project. In December 2008, SCAQMD adopted interim CEQA GHG significance thresholds for use only when SCAQMD is the lead agency on Projects. These thresholds apply to stationary source (industrial) projects only, and include a 10,000 metric ton CO2e screening level. SCAQMD has not recommended them for use by other lead agencies at this time. As of May 2009, SCAQMD and the Working Group are developing interim CEQA GHG significance thresholds for use in a broader context by other lead agencies.

3.2.3 County

In April 2007, the California Attorney General filed a challenge to the environmental impact report certified by the County of San Bernardino for its General Plan Update. The lawsuit alleged, among other things, that the analysis of GHG and climate change in the document was inadequate. In August, 2007, the Attorney General and the County entered into a

settlement agreement. Among other measures, the County agreed to prepare a Greenhouse Gas Emissions Reduction Plan that would include an inventory of greenhouse gases including identifying a baseline inventory, an inventory of GHG emitted in 1990 and a projected inventory reasonably anticipated to be emitted in 2020, and the identification of feasible GHG emission reduction measures. Compliance with AB 32 or its governing regulations was identified as a means of compliance with the terms of the agreement.

4.0 PROJECT IMPACTS

4.1 THRESHOLDS OF SIGNIFICANCE

The CEQA Guidelines, Section 15064.7, define a threshold of significance as an identifiable quantitative, qualitative or performance level of a particular environmental effect, non-compliance with which means the effect will normally be determined to be significant by the agency and compliance with which means the effect normally will be determined to be less than significant. CEQA gives wide latitude to lead agencies in determining what impacts are significant and does not prescribe thresholds of significance, analytical methodologies, or specific mitigation measures.[9] CEQA leaves the determination of significance to the reasonable discretion of the lead agency and encourages lead agencies to develop and publish thresholds of significance to use in determining the significance of environmental effects. However, the regulations required to meet the State goals under AB32 are still under development. Furthermore, pursuant to SB 97, guidelines to be prepared by OPR for addressing greenhouse gas emissions under CEQA will not be adopted until January 1, 2010.

OPR released the CEQA guideline amendments for GHG emissions to the State Resource Agency on April 14, 2009. The State Resources Agency will certify and adopt the CEQA guideline amendments into law on or before January 2010. OPR does not identify a threshold of significance for GHG emissions, nor has it prescribed assessment methodologies or specific mitigation measures. The amendments encourage lead agencies to consider many factors in performing a CEQA analysis, but preserve the discretion granted by CEQA to lead agencies in making their own determinations based on substantial evidence. The amendments also encourage public agencies to make use of programmatic mitigation plans and programs from which to tier when they perform individual project analyses.

While the OPR has not yet adopted formal significance thresholds, OPR issued a guidance document on June 19, 2008 to provide interim advice to lead agencies regarding the analysis of GHG emissions in environmental documents. The technical advisory suggests three components for CEQA disclosure: quantification of GHG emissions from a project's construction and operation, determination of significance of the project's impact to climate change, and if the project is found to be significant, the identification of suitable alternatives and mitigation measures. The analysis contained herein follows this guidance.

[9] *Climate Change and CEQA, Presentation to the Climate Action Team, Cynthia Bryant, Director, Governor's Office of Planning and Research, September 19, 2007.*

The California Air Pollution Control Officers Association (CAPCOA) released a white paper, entitled CEQA and Climate Change, in January, 2008. The white paper contains the disclaimer that it is "intended as a resource, not a guidance document," and examines various threshold approaches available to air districts and lead agencies for determining whether GHG emissions are significant.

In October 2008, CARB released a draft guidance document regarding interim CEQA GHG significance thresholds, wherein CARB proposed a tiered approach. CARB also proposed separate performance standards for construction, operational energy efficiency, water use, waste, and transportation, as well as a quantitative significance threshold in metric tons of CO_2e (carbon dioxide equivalent) per year. The draft guidance included neither specific performance standards nor numeric significance thresholds for residential or commercial projects. On April 27, 2009, CARB revealed that it had abandoned its development of the proposed interim CEQA GHG significance thresholds in a public meeting; however, as of May 21 no formal announcement has been publicized on CARB's website or elsewhere.

In order to provide GHG emission analysis guidance to the local jurisdictions within the SCAB, the SCAQMD has organized a Working Group to develop GHG emission analysis guidance and thresholds.

SCAQMD released a draft guidance document regarding interim CEQA GHG significance thresholds in October 2008. SCAQMD proposed a tiered approach, whereby the level of detail and refinement needed to determine significance increases with a project's total GHG emissions. SCAQMD also proposed a screening level of 3,000 metric tons per year for commercial or residential projects, under which project impacts are considered "less than significant." The 3,000 metric ton screening level was intended "to achieve the same policy objective of capturing 90 percent of the GHG emissions from new development projects in the residential/commercial sectors."[10] For projects with GHG increases greater than 3,000 metric tons per year, the use of a percent emission reduction target (e.g., 30 percent) was proposed to determine significance. This emission reduction target is a reduction below what is considered "business as usual." SCAQMD also proposes that projects amortize construction emissions over the 30-year lifetime of any given project. Project construction emissions can be amortized by calculating total construction period emissions and dividing by the 30-year lifetime of the project. In December 2008, SCAQMD adopted interim CEQA GHG significance thresholds for use only when SCAQMD is the lead agency on projects. These thresholds apply to stationary source (industrial) projects only, and include a 10,000 metric ton CO_2e screening level. SCAQMD has not recommended them for use by other lead agencies at this time. As of May 21, 2009, SCAQMD and the Working Group are developing interim CEQA GHG significance thresholds for use in a broader context by other lead agencies.

[10] *SCAQMD, Board Meeting, December 5, 2008, Agenda No. 31, Interim GHG Significance Threshold Proposal – Key Issues/Comments Attachment D.*

For the purposes of this analysis, a significant impact related to global climate change would occur if the proposed project were determined to result in GHG emission reductions that fail to meet or exceed the AB32 reduction target of 30 percent below "business as usual."

4.2 METHODOLOGY

This technical report is based on the Air Quality Analysis for the Church of the Woods, which was prepared by LSA Associates in July, 2008, which is located in Appendix A.

4.2.1 Business as Usual Scenario

Construction emissions were calculated using the SCAQMD methodology for sample construction scenarios. Emission factors for CO_2 were derived from EMFAC 2002 (Version 2.2). Construction CH_4 and N_2O values are derived from factors published in the 2006 Intergovernmental Panel on Climate Change (IPCC) Guidelines for National Greenhouse Gas Inventories. These values are then converted to metric tons for consistency. Per SCAQMD guidance, construction emissions were amortized over the 30-year lifetime of the project.

Operational mobile source emission calculations associated with the business as usual scenario assumed trip rates for the church and soccer field derived from the Institute of Transportation Engineers' 7th edition handbook, *Trip Generation*. The assumed fleet mix of vehicles was derived from URBEMIS2007. Mobile source emissions calculations utilize EMFAC2007-generated emission factors for CO_2 and CH_4.

The consumption of fossil fuels to generate electricity, heat, and hot water creates GHG emissions. The "business as usual" scenario assumes minimum compliance with Title 24 standards (Part 6 of the California Code of Regulations; Energy Efficiency Standards for Residential and Non Residential Buildings, as amended October 1, 2005). Future fuel consumption rates are estimated based on the square footage of recreational fields and worship facilities proposed on the site, as well as the predicted water supply needs of the proposed project. Natural gas emissions were calculated by URBEMIS2007. Electricity usage factors from the Energy Information Administration's 2003 Commercial Buildings Energy Consumption Survey are used in conjunction with the square footages to project fuel consumption rates. The energy associated with conveying water to the proposed project was calculated using rates from the CEC. The Energy Information Administration Updated State- and Regional-level Greenhouse Gas Emission Factors were then applied to the respective usage rates to calculate annual greenhouse gas emissions in metric tons. Because power providers import power during peak demand periods, it is difficult to identify the specific generating source of electricity. Thus, the emission factors used in this analysis represent a State-wide average of known power producing facilities, utilizing various technologies and emission control strategies, and do not take into account the emissions profile for the proposed project.

4.2.2 Proposed Project

Construction emissions resulting from the proposed project were calculated using the same methodology as with the business as usual scenario described above. GHG emissions from construction would incorporate numerous mitigation measures, described below in Section 4.2.3, which are designed to reduce emissions of air pollutants, including GHGs. However, determining the level of GHG emissions reductions associated with the construction mitigation measures would be speculative at this point in time; therefore, construction-related GHG emission calculations do not include these reductions.

Mobile source emissions calculations from operation of the proposed project assume an average trip length of 10 miles, as stated in the Air Quality Analysis prepared by LSA, July 2008. Trip generation rates used for the proposed project analysis assume a full occupancy of 1200 church attendees per Sunday and that church attendees will arrive and depart in passenger vehicles with an average occupancy of three attendees per vehicle, in accordance with the traffic study prepared by LSA, July 2008. The mitigation measures listed below include measures intended to meet or exceed this ridership and encourage the use of other modes of transportation. As with the business as usual scenario described above, the assumed fleet mix of vehicles was derived from URBEMIS2007. Mobile source emissions utilize EMFAC2007-generated emission factors for CO_2 and CH_4.

The proposed project's electricity, heat, and natural gas emission calculations take into account the mitigation measure of reducing energy demand by ten percent, which is described below. However, GHG emission reductions resulting from solar power generation, reduced water demand and reduced solid waste disposal have not been quantified as the details needed to support such refined analyses are not known at this time and the results would be more speculative in nature. This approach is more conservative, resulting in higher GHG emissions estimates than are expected from the mitigated project.

4.2.3 Standard Conditions of Approval

The County of San Bernardino Current Planning Department, as part of its review process, requires the applicant to implement applicable "standard conditions of approval" prior to issuance of a building permit in order to reduce the project's contribution towards GHG emissions. The following standard conditions of approval are applicable to water conservation and will be implemented as part of the project:

- The Developer shall document that the design of the proposed buildings or structures exceeds by a minimum of five percent (5%) the current Title 24 requirements. County Planning shall coordinate this review with the County Building and Safety.

The following design features related to water conservation may be implemented in combination with other design features[11] (non-water conservation related) to fulfill this mitigation provided that the total increase in efficiency meets or exceeds the Title 24 minimum plus five percent (5%) cumulative goal for the entire project (Title 24, Part 6 of the California Code of Regulations; Energy Efficiency Standards for Residential and Non Residential Buildings, as amended October 1, 2005; Cool Roof Coatings performance standards as amended September 11, 2006):

- Incorporate energy efficient appliances;
- Incorporate energy efficient domestic hot water systems; and
- Incorporate other measures that will increase energy efficiency.

- The developer shall submit a landscape plan for the project that includes shade trees around main buildings, particularly along southern and western elevations where practical and in a manner that will not interfere with loading locations or other operational constraints. These plans shall also include drought tolerant and smog tolerant trees, shrubs, and groundcover to ensure the long-term viability and conserve water and energy.

- The developer shall submit irrigation plans that are designed, so that all common area irrigation areas shall be capable of being operated by a computerized irrigation system which includes either an onsite weather station, ET gauge or ET based controller capable of reading current weather data and making automatic adjustments to independent run times for each irrigation valve based on changes in temperature, solar radiation, relative humidity, rain and wind. In addition, the computerized irrigation system shall be equipped with flow sensing capabilities, thus automatically shutting down the irrigation system in the event of a mainline break or broken head. These features will assist in conserving water, eliminating the potential of slope failure due to mainline breaks and eliminating over-watering and flooding due to pipe and/or head breaks.

- All showerheads, lavatory faucets, and sink faucets shall comply with the California Energy Conservation flow rate standards, as confirmed by County Building & Safety.

- Low flush toilets shall be installed where applicable as specified in California State Health and Safety Code Section 17921.3, as confirmed by County Building & Safety.

[11] *Please refer to Section 3.J, Global Climate Change, for a listing of all project design features that may be implemented by the project to meet or exceed the Title 24 minimum efficiency requirements plus ten percent (10%) cumulative goal for the entire project.*

- The developer shall submit to County Planning for review and approval landscape and irrigation plans that are designed to include drought tolerant and smog tolerant trees, shrubs, and groundcover to ensure the long-term viability and conserve water and energy.

4.2.4 Mitigation Measures

GHG emissions from the proposed project would be mitigated through implementation of the following measures, which have been based on those originally stated in the Air Quality Analysis performed by LSA Associates, Inc., August 2009.

Construction Activity Mitigation Measures

A. Additional dust suppression measures in the SCAQMD CEQA Air Quality Handbook are included as part of the project's mitigation.

- Revegetate disturbed areas with native vegetation as soon as possible.
- All excavating and grading operations shall be suspended when wind speeds (as instantaneous gusts) exceed 25 mph.

- When visible soil materials are carried to adjacent streets, those streets shall be swept once per day to the extent necessary to remove the visible soil material (recommend water sweepers with reclaimed water).
- Install wheel washers where vehicles enter and exit unpaved roads onto paved roads, or wash trucks and any equipment leaving the site each trip.
- All on-site roads shall be paved as soon as feasible, watered periodically, or chemically stabilized.
- The area disturbed by clearing, grading, earthmoving, or excavation operations shall be minimized at all times.

B. The Construction Contractor shall select the construction equipment used on site based on low emission factors and high energy efficiency. The Construction Contractor shall ensure that construction grading plans include a statement that all construction equipment will be tuned and maintained in accordance with the manufacturer's specifications.

C. The Construction Contractor shall utilize electric or diesel powered equipment in lieu of gasoline powered engines where feasible.

D. The Construction Contractor shall ensure that construction grading plans include a statement that work crews will shut off equipment when not in use.

During smog season (May through October), the overall length of the construction period will be extended, thereby decreasing the size of the area prepared each day, to minimize vehicles and equipment operating at the same time.

E. The Construction Contractor shall time the construction activities so as to not interfere with peak-hour traffic and minimize obstruction of through traffic lanes adjacent to the site; if necessary, a flagperson shall be retained to maintain safety adjacent to existing roadways.

F. The Construction Contractor shall support and encourage ridesharing and transit incentives for the construction crew.

G. For those applications for which suitable products are commercially available, the construction contractors shall use “Super Compliant” architectural coatings. A list of "Super-Compliant" paint manufacturers is available at: http://www.aqmd.gov/prdas/brochures/paintguide.html

H. Prior to issuance of any grading or building permit, the project plans and specifications shall include a statement that at least 50 percent of non-hazardous construction and demolition debris (including, but not limited to, soil, vegetation, concrete, lumber, metal, and cardboard) shall be recycled, salvaged, or reused. The statement in the plans and specifications shall be reviewed and approved by the Planning Department.

Operational Mitigation Measures

A. Prior to issuance of a building permit, the applicant shall demonstrate that the design of the proposed buildings or structures exceeds the requirements set forth in Title 24 Part 6 of the California Code of Regulations; Energy Efficiency Standards for Residential and Non Residential Buildings, as amended October 1, 2005, by a minimum of 10 percent, subject to review by the County Building Official. Documentation of compliance with this measure shall be provided to the Planning Department and Building Official for review and approval prior to issuance of the permit. Installation of the identified mitigation measures or equipment will be confirmed by the County Building Official prior to certificate of occupancy.

B. Prior to issuance of a building permit, the applicant shall demonstrate that the design of the proposed buildings or structures incorporates basic or enhanced insulation such that heat transfer and thermal bridging is minimized. Documentation of compliance with this measure shall be provided to the Planning Department and Building Official for review and approval. Installation of the identified mitigation measures or equipment will be confirmed by the County Building Official prior to certificate of occupancy.

C. Heating and cooling systems will be designed for maximum efficiency by limiting air leakage through the structure. Documentation of compliance with this measure shall be provided to the Planning Department and Building Official for review and approval. Installation of the identified mitigation measures or equipment will be confirmed by the County Building Official prior to certificate of occupancy.

D. Prior to issuance of a building permit, the applicant shall demonstrate that the design of the proposed buildings or structures incorporates ENERGY STAR™ rated windows or better. Documentation of compliance with this measure shall be provided to the Planning Department and Building Official for review and approval. Installation of the identified mitigation measures or equipment will be confirmed by the County Building Official prior to certificate of occupancy.

E. Prior to issuance of a building permit, the applicant shall demonstrate that the design of the proposed buildings or structures incorporates ENERGY STAR™ rated space heating and cooling equipment or better. Documentation of compliance with this measure shall be provided to the Planning Department and Building Official for review and approval. Installation of the identified mitigation measures or equipment will be confirmed by the County Building Official prior to certificate of occupancy.

F. Prior to issuance of a building permit, the applicant shall demonstrate that the design of the proposed buildings or structures incorporates ENERGY STAR™ rated light fixtures or better. Documentation of compliance with this measure shall be provided to the Planning Department and Building Official for review and approval. Installation of the identified mitigation measures or equipment will be confirmed by the County Building Official prior to certificate of occupancy.

G. Prior to issuance of a building permit, the applicant shall demonstrate that the design of the proposed buildings or structures includes consideration of/installation/operation of renewable electric generation systems. Documentation of compliance with this measure shall be provided to the Planning Department and Building Official for review and approval. Installation of the identified mitigation measures or equipment will be confirmed by the County Building Official prior to certificate of occupancy.

H. Prior to issuance of a building permit, the applicant shall demonstrate that the design of the proposed building or structure designs incorporate energy efficient hot water systems. Documentation of compliance with this measure shall be provided to the Planning Department and Building Official for review and approval. Installation of the identified mitigation measures or equipment will be confirmed by the County Building Official prior to certificate of occupancy.

I. Prior to the issuance of a building permit, the applicant shall demonstrate that provisions for future solar panels have been designed into all main buildings. Documentation of compliance with this measure shall be provided to the Planning Department and Building Official for review and approval.

J. Prior to issuance of a building permit, the applicant shall demonstrate that the proposed building or structure designs incorporate interior and exterior storage areas for recyclables and green waste and adequate recycling containers located in public areas. Documentation of compliance with this measure shall be provided to the Planning Department and Building Official for review and approval. Installation of the identified mitigation measures or equipment will be confirmed by the County Building Official prior to certificate of occupancy.

K. Prior to issuance of a building permit, the applicant shall demonstrate that measures have been included to promote ride sharing programs such as, but not necessarily including publishing ride sharing information for all of the participants in church activities, designating a certain percentage of parking spaces for ride sharing vehicles, designating adequate passenger loading/unloading and waiting areas for ride sharing vehicles, and providing a website or message board for coordinating rides. Documentation of compliance with this measure shall be provided to the Planning Department and Building Official for review and approval. Installation of the identified mitigation measures or equipment will be confirmed by the County Building Official prior to certificate of occupancy.

L. Prior to issuance of a building permit, the applicant shall demonstrate that measures have been included to provide adequate bicycle parking near building entrances to promote cyclist safety, security, and convenience. Documentation of compliance with this measure shall be provided to the Planning Department and Building Official for review and approval. Installation of the identified mitigation measures or equipment will be confirmed by the County Building Official prior to certificate of occupancy.

By incorporating these mitigation measures, the project will exceed the requirements of Title 24, Part 6 of the California Code of Regulations; Energy Efficiency Standards for Residential and Non Residential Buildings, as amended October 1, 2005 by at least ten percent. In addition, the project will encourage ride sharing and bicycle traffic. These mitigation measures comply with GHG emission reduction strategies that have been defined by the CAT. The CAT emission reduction strategies and the proposed project's compliance with these strategies are summarized in Table 2 below.

Table 2

Consistency with Applicable California Climate Action Team Report Strategies

Strategies for Reducing GHG Emissions	Project Consistency
Vehicle Climate Change Standards and Other New Light Duty Vehicle Technology Improvements Reduce GHG emissions from vehicles by conforming to AB1493. AB 1493 mandates that California develop and adopt regulations to accomplish the maximum feasible and cost-effective reduction of GHG emissions from passenger vehicles and light duty trucks. CARB adopted these regulations in 2004; they pertain to passenger vehicles and light duty trucks and phase in during model years 2009 through 2016.	Vehicles travelling to and from the project site would be in compliance with the CARB GHG emissions regulations that pertain to their model years.
Diesel Anti-Idling Reduce GHG emissions from diesel-fueled commercial motor vehicle idling, by reducing idling times and electrifying truck stops.	Construction vehicle idling would be limited to 15 minutes for construction equipment and five minutes for heavy duty trucks.
Alternative Fuels: Biodiesel Blends and Ethanol Increase the use of alternative fuels that are less GHG-intensive, by adopting regulations to require the use of biodiesel to displace California diesel fuel, increasing the number of flexible fueled vehicles present in California, and increasing the percentage of ethanol used in gasoline.	The fuel used by vehicles travelling to and from the project would be subject to regulations pertaining to the use of biodiesel to displace California diesel fuel, and to the increase in the ethanol percentage used in gasoline.
Achieve 50 percent Statewide Recycling Goal Achieve California's 50 percent waste diversion mandate (AB 939, Integrated Waste Management Act of 1989) to reduce GHG emissions associated with virgin material extraction. AB 939 required each city or county plan to include an implementation schedule that showed 50 percent diversion of all solid waste by January 1, 2000, through source reduction, recycling, and composting.	The project would be designed with adequate space indoors and outdoors to facilitate recycling collection. In addition, construction of the proposed project would maximize the reuse and recycling of construction waste.
Urban Forestry Increase carbon sequestration by planting five million trees in urban areas statewide by 2020.	Landscaping for the proposed project would include planting shade trees as part of the landscaping design.
Water Use Efficiency Implement efficient water management practices and incentives, as saving water saves energy and GHG emissions.	The project would include the use of water-efficient fixtures and appliances. Landscaping of the project would utilize water-efficient irrigation systems and devices, as well as reclaimed water.
Building Energy Efficiency Standards in Place and in Progress Reduce GHG emissions from electricity by reducing energy demand. The California Energy Commission updates building energy efficiency standards that apply to newly constructed buildings and additions to and alterations to existing buildings. Both the Energy Action Plan and the Integrated Energy Policy Report call for ongoing updating of the standards	Project buildings would be constructed to exceed the requirements of Title 24, Part 6 of the California Code of Regulations, Energy Efficiency Standards for Residential and Non-Residential Buildings, as amended October 1, 2005) by ten percent. The project will also include energy efficiency measures and energy audits, to reduce project energy demand.

Table 2 (Continued)

Consistency with Applicable California Climate Action Team Report Strategies

Strategies for Reducing GHG Emissions	Project Consistency
Appliance Energy Efficiency Standards in Place and in Progress Reduce GHG emissions from electricity by reducing energy demand. The California Energy Commission updates appliance energy efficiency standards that apply to electrical devices or equipment sold in California. Recent policies have established specific goals for updating the standards; new standards are currently in development.	The project will include the installation of Energy Star appliances. Other appliances purchased for the project would be subject to State law and thus comply with the energy efficiency standards that are in effect at the time of manufacture.
Measures to Improve Transportation Energy Efficiency Advance cleaner transportation and reduce GHG emissions by providing incentives, enhancing outreach and educational programs to bring a coordinated message of sustainable transportation and root causes of GHG emissions, diversifying the transportation energy infrastructure, and slowing the rate of VMT growth.	Project design includes measures to improve transportation energy efficiency. The project includes measures to encourage ride sharing and bicycle traffic.
Green Buildings Initiative Reduce energy use in public and private buildings to comply with Governor Schwarzenegger's Green Building Executive Order, S-20-04, which mandates a 20 percent reduction in building energy use by 2015.	The project incorporates energy-saving mitigation measures, such as energy-efficient appliances and lighting and energy-saving windows.

Climate Action Team strategies not listed are not applicable to this project.

Source: PCR Services Corporation, 2009.

4.3 PROJECT IMPACTS

Emissions of GHGs were calculated for construction and future operation of the proposed project. Emissions estimates are presented in Table 3 on page 21. As shown, the net increase in GHG emissions from vehicle, electrical, and natural gas usage associated with the proposed project is approximately 1,326 tons of CO_2e.[12]

Actual project emissions will likely be lower than the estimates presented for the operational scenarios above, as the estimates do not account for the emissions reduction requirements associated with AB1493, SB 1368, AB32, Executive Order S-3-5, and regulations that have yet to be created. According to the CEC, the reductions in emissions anticipated under AB1493 (if reinstated) will be equivalent to reducing gasoline consumption to a rate of 31

[12] *"Net" does not include any credits for emission reductions achieved through other emission reduction requirements or strategies*

Table 3

Operational Greenhouse Gas Emissions

Emission Source	CO_2e[f] (Metric Tons)
Business as Usual Scenario	
Construction (Amortized)	**60**
On Road Mobile Sources[a]	**1,562**
Electricity[b]	**136**
Natural Gas[c]	**131**
Water Conveyance	**19**
Total	**1,909**
Proposed Project	
Construction (Amortized)	60
On Road Mobile Sources[a]	1,006
Electricity[b]	122
Natural Gas[c]	118
Water Conveyance	19
Total	**1,326**
Emission Reduction	**583**
Percent Reduction	**31%**

[a] *Mobile source emissions are based on an average trip length of 10 miles, and fleet percentages provided by URBEMIS 2007. Mobile source values were derived using EMFAC2007.*

[b] *Electricity Usage Rates from the Energy Information Administration's 003 Commercial Buildings Energy Consumption Survey.*

[c] *Natural gas emissions are derived from URBEMIS2007.*

[d] *Water Conveyance Calculations are based on factors derived from the California Energy Commission, and calculations are part of the electricity calculations in the Appendix.*

[e] *Statewide totals were derived from the CARB Draft California GHG Inventory, 2007.*

[f] *All CO_2e factors were derived using the CCAR GRP; Version 2.2, March 2007.*

Source: PCR Services Corporation, 2009.

percent of 1990 gasoline consumption (and associated GHG emissions) by 2020. Similarly, emission standards on the State's power plants under SB 1368 have not been used to predict emissions shown in Table 3, and will likely result in actual emissions below the levels presented. It should also be noted that GHG emission reductions from many of the mitigation measures described above are difficult to quantify, and thus were not included in this analysis.

It is difficult to estimate what portion of the direct and indirect GHG emissions presented above represent new GHG emissions versus existing displaced emissions. Displaced emissions are those that prior to the project, are created and emitted elsewhere; whereas new GHG emissions are those that do not and would not exist without implementation of the project, creating an incremental increase in emissions. Those who would utilize the new worship facility already generate GHG emissions through their worship; therefore, any net increase in GHG emissions with their relocation to the site would depend on the nature of their current activities, such as the distance of their commute, the energy demand associated with their current worship

facility, and other factors. Accordingly, assuming all project-related operational emissions are new is conservative for this reason as well.

As indicated in the analysis above, the estimate of project GHG emissions is conservative, with the theoretical net annual increase in GHG emissions from the project estimated to represent only 1,326 metric tons of CO_2e. According to the threshold of significance discussed above, a global climate change impact would occur if the GHG emissions created from the ongoing operations are not reduced by 30 percent over those generated by the business as usual project. The proposed project is considered a less intensive use as compared to business as usual, because a church of this size would be expected to generate a substantially greater number of vehicle trips per year, per ITE Guidelines. In addition, the proposed project has committed to reducing building energy demand by ten percent. Because the project is considered a less intensive use than business as usual and incorporates the GHG-reducing mitigation measures listed above, total annual project emissions show an estimated 31 percent reduction below what is considered business as usual. This 31 percent reduction exceeds the AB 32 reduction target of 30 percent and, therefore, the project does not exceed the project's threshold of significance.

5.0 CUMULATIVE IMPACTS

AB32 set the goal of reducing GHG emissions to 1990 levels by 2020, which CARB estimates equates to a 30 percent reduction from "business as usual" emission levels for 2020 or approximately 15 percent from current GHG levels. The State has introduced additional legislation and CARB has taken action to support AB32 and reduce statewide GHG emissions. SB 97 requires the PUC and CEC to establish GHG emission performance standards for the generation of electricity and includes a mechanism for reducing the emissions of electricity providers. CARB approved an AB32-mandated list of discrete early action measures in 2007 and the Climate Change Scoping Document in 2008, which identified measures that various sectors could utilize to reduce GHG emissions.

As shown above in Table 3, implementation of the GHG emissions reducing mitigation measures and project mitigation measures would reduce the proposed project's GHG emissions beyond business as usual by 31 percent. The proposed project exceeds the reduction target of 30 percent below "business as usual" levels of GHG emissions. Therefore, with incorporation of the proposed project's GHG emission reducing project components the project's incremental contribution of GHG emissions is less than significant.

6.0 CONCLUSION

Due to the complex physical, chemical and atmospheric mechanisms involved in global climate change, there is no basis for concluding that the project's very small theoretical emissions increase could actually cause a measurable increase in global GHG emissions necessary to force global climate change. The GHG emissions of the project alone will not likely cause a direct physical change in the environment. It is global emissions in their aggregate that contribute to climate change, not any one source of emissions alone. The GHG emissions associated with the proposed project's construction and operation are less than the most stringent applicable screening level yet proposed by a regulatory agency with potential jurisdiction over this proposed project (3,000 metric tons of CO_2e, proposed by SCAQMD). In addition, as shown in Table 2, the project incorporates all applicable strategies established by the OPR. Therefore, due to the incremental amount of GHG emissions estimated for this project, the lack of any evidence for concluding that the project's GHG emissions could cause any measurable increase in global GHG emissions necessary to force global climate change, and the fact that the project incorporates mitigation measures to reduce potential GHG emissions the project is considered not to hinder the goals of AB32. Accordingly, the project results in a cumulatively less than significant impact with respect to Global Climate Change.

CHURCH OF THE WOODS

Appendix

Global Climate Change Assessment Files

Provided by PCR Services Corporation

August 2009

A-1	Greenhouse Gas Emissions- Construction
A-2	Greenhouse Gas Emissions - Operations
B	LSA Air Quality Analysis, July 2008

Appendix A–1

- Greenhouse Gas Emissions
  - Construction CO2e

Church of the Woods Construction Phase I

Phase	I/II	CO2 (lb/day)	Duration (days)	CO2 (lbs)	CO2 (tons)	CH4	N2O	Total CO2e
Site Preparation	I	11,213	20	224,260	102	0.29	0.31	102
(fine site grading)	II	11,213	20	224,260	102	0.29	0.31	102
Grading	I	26,043	50	1,302,150	591	1.71	1.80	594
(Mass Grading)	II	26,043	50	1,302,150	591	1.71	1.80	594
Structure Construction	I	17,574	115	2,021,010	917	2.66	2.80	922
(Building Construction)	II	9,105	80	728,400	330	0.96	1.01	332
Architectural Coating	I	19,460	20	389,200	177	0.51	0.54	178
And Asphalt Paving	II	19,460	20	389,200	177	0.51	0.54	178
			Total :	**3,936,620**	**1,786**	**5**	**5**	**1,796**

0.00037%

Appendix A–2

- Operational Greenhouse Gas Emissions

Church of the Woods
Greenhouse Gas Analysis

Emission Source	CO_2E[d] (Metric Tons)
Business as Usual	
Construction	60
On-road Vehicles[a]	1,562
Electricity[b]	136
Water	34
Natural gas[c]	131
Total	**1,924**
Proposed Project	
Construction	60
On-road Vehicles[a]	1,006
Electricity[b]	122
Water	34
Natural gas[c]	118
Total	**1,341**
Difference in GHG Emissions	583
	30.29%

[a] *Mobile source values were derived using EMFAC2007 in addition to the California Climate Action Registry General Reporting Protocol; Version 3.1, January 2009.*

[b] *Electricity Usage Rates from Table A9-11-A, CEQA Air Quality Handbook, SCAQMD, 1993. Water conveyance energy rates from California Energy Commission Staff Report: California's Water - Energy Relationship. 2005*

[c] *Natural Gas Usage Rates from Table A9-12-A, CEQA Air Quality Handbook, SCAQMD, 1993.*

[d] *All CO2e factors were derived using the California Climate Action Registry General Reporting Protocol; Version 3.0, April 2008*

Sources: PCR Services Corporation, 2008.

Electricity

Land Use	1,000 Sqft	Usage Rate [a] (kWh\sq.ft\yr)	(KWh\year)	MWh\year
Business As Usual				
Religious Worship	100.0	4.90	490,000	490
Proposed Project				
Religious Worship	100.0	4.41	441,000	441
Difference in Electricity Usage			**49,000**	**49**

GHG	lbs/MWh[b]	lbs	metric tons	CO_2E (metric tons)
Business As Usual				
CO_2	610	298,900	135.58	135.58
CH_4	0.0067	3	0.00	0.03
N_2O	0.0037	2	0.00	0.25
Proposed Project				**136**
CO_2	610	269,010	122.02	122.02
CH_4	0.0067	3	0.00	0.03
N_2O	0.0037	2	0.00	0.23
				122

[a] Electricity Usage Rates from Energy Information Administration, www.eia.doe.gov/emeu/cbecs2003/detailed_tables_2003/detailed_tables_2003.html.

b Emission factors for CO_2, CH_4, and N_2O were derived from the Energy Information Administration, Updated State- and Regional-level Greenhouse Gas Emission Factors for Electricity (March 2002), http://www.eia.doe.gov/pub/oiaf/1605/cdrom/pdf/e-supdoc.pdf. (http://www.eia.doe.gov/oiaf/1605/ee-factors.html accessed 4/14/2008).

Water and Wastewater Generation Factors

			Water			Wastewater		
Land Use	Amount	Units	AF/Year/Unit	MG/Year/Unit	MG/Year	GPD/Unit	MG/Year/Unit	MG/Year
Business As Usual								
Religious Worship	100	KSF	0.17	0.055	5.5	100	0.037	3.7
Recreational	2	KSF	0.17	0.055	0.1	325	0.119	0.2
Total BAU	102				**5.7**			**3.9**
Proposed Project								
Religious Worship	100.0	KSF	0.170	0.055	5.5	100	0.037	3.7
Recreational	2.0				0.0	325	0.119	0.2
Total Project	102.0				**5.5**			**3.9**

Water Conveyance (Water and Wastewater)

	MGD	Usage Rate [c] kWh/MG	(KWh\year)	MWh\year
Without Project Features				
Water Supply, Conveyance, Treatment, and Wastewater Treatment	0.03	13,022	124,198	124
Proposed Project				
Water Supply, Conveyance, Treatment, and Wastewater Treatment	0.03	13,022	122,755	123

GHG	lbs/MWh[b]	lbs	metric tons	CO_2E (metric tons)
Business As Usual				
CO_2	610	75,760	34.36	34.36
CH_4	0.0067	1	0.00	0.01
N_2O	0.0037	0	0.00	0.06
Proposed Project				34
CO_2	610	74,880	33.97	33.97
CH_4	0.0067	1	0.00	0.01
N_2O	0.0037	0	0.00	0.06
				34

[a] Water Usage Rates from from California Energy Commission: Redefining Estimates of Water- Related Energy Use in California, 2006.

b Emission factors for CO_2, CH_4, and N_2O were derived from the Energy Information Administration, Updated State- and Regional-level Greenhouse Gas Emission Factors for Electricity (March 2002), http://www.eia.doe.gov/pub/oiaf/1605/cdrom/pdf/e-supdoc.pdf. (http://www.eia.doe.gov/oiaf/1605/ee-factors.html accessed 4/14/2008).

Natural Gas

Land Use	1,000 Sqft	Usage Rate[c] (cu.ft\sq.ft\mo)	Total Natural Gas Usage (cu.ft\mo)	Total Natural Gas Usage (cu.ft\year)	Total Natural Gas Usage (10^6 cu. Ft.\year)
Business as Usual					
Religious Worship	100.0	2.0	200,000	2,400,000	2.4
Proposed Project					
Religious Worship	100.0	1.8	180,000	2,160,000	2.2
Difference in Natural Gas Usage			**20,000**	**240,000**	**0.2**

[a] Natural Gas Usage Rates from URBEMIS2007.

GHG	lb/10^6 cu. Ft.	lbs	metric tons	CO_2E (Metric Tons)
Business As Usual				
CO_2	120,000	288,000	130.63	130.63
CH_4	2.3	6	0.00	0.05
N_2O	2.2	5	0.00	0.74
Proposed Project				**131**
CO_2	120,000	259,200	117.57	117.57
CH_4	2.3	5	0.0023	0.0473
N_2O	2.2	5	0.0022	0.6682
				118

[b] Emission factors for CO_2, CH_4, and N_2O were derived from EPA AP-42 Volume I Chapter 1.4, Table 1.4-2.

On Road Mobile Source

Land Use	Annual Trips	Annual VMT[a]
Business as Usual		
Religious Worship	422,392	4,223,923
Soccer Complex	30,759	307,585
Total		4,531,508
Proposed Project		
Church Campus	292,000	2,920,000
Difference in Annual VMT		1303923

average trip length (mi): 10

GHG	Grams/Mile	Grams	metric tons	CO_2E (Metric Tons)
Business As Usual				
CO_2	333.04	1,509,159,819	1,509.16	1,509
CH_4	0.02	104,225	0.10	2
N_2O	0.04	163,134	0.16	51
Proposed Project				1,562
CO_2	333.04	972,468,040	972	972
CH_4	0.02	67,160	0	1
N_2O	0.04	105,120	0	33
				1,006

[c] Averaged EMFAC2007 fleet values for 40 mph

[d] Emission factor for N_2O was derived from EPA *Update of Methane and Nitrous Oxide Emission Factors for On-Highway Vehicles,* November 2004, Table 28.

2009		CO2	CH4	N_2O	Fleet %
LDA	CAT	293.227	0.021	0.032	60.9%
LDA	DSL	360.250	0.006	0.001	0.5%
LDT	CAT	364.335	0.0265	0.042	34.6%
LDT	DSL	349.063	0.004	0.002	0.4%
HDT	CAT	468.108	0.067	0.088	1.8%
HDT	DSL	931.705	0.0126	0.005	1.8%
Composite		333.037	0.023	0.036	100%

	Vehicle Categories	Fleet %	Diesel %
LDA	Light Auto	51.3%	0.4%
	Light Truck <3750 lbs	7.3%	4.1%
LDT	Light Truck 3751-5750 lbs	23.1%	0%
	Med Truck 5751-8500 lbs	10.7%	0%
HDT	Lite-Heavy Truck 8501-10,000 lbs	1.6%	18.8%
	Lite-Heavy Truck 10,000-14,000 lbs	0.5%	40.0%
	Med-Heavy Truck 14,001-33,000 lbs	0.9%	77.8%
	Heavy-Heavy Truck 33,001-60,000 lbs	0.6%	100%
LDT	Other Bus	0.1%	100%
	Urban Bus	0.1%	100%
LDA	Motorcycle	2.8%	0%
LDT	School Bus	0.1%	100%
	Motor Home	0.9%	11.1%
		100%	

Appendix B

- LSA Air Quality Analysis, July 2008

AIR QUALITY ANALYSIS

CHURCH OF THE WOODS

Submitted to:

County of San Bernardino

Prepared by:

LSA Associates, Inc.
20 Executive Park, Suite 200
Irvine, California 92614-4731
(949) 553-0666

LSA Project No. CTW430

LSA

July 2008

TABLE OF CONTENTS

INTRODUCTION 1
PROJECT DESCRIPTION 2
SETTING 5
- METHODOLOGY RELATED TO AIR QUALITY IMPACT ASSESSMENT 5
- EXISTING ENVIRONMENTAL SETTING 5
- REGULATORY SETTINGS 15
- REGIONAL AIR QUALITY PLANNING FRAMEWORK 18
- THRESHOLDS OF SIGNIFICANCE 20

IMPACTS AND MITIGATION 24
- CONSTRUCTION IMPACTS 24
- LONG-TERM REGIONAL AIR QUALITY IMPACTS 26
- LONG-TERM MICROSCALE (CO HOT SPOT) ANALYSIS 29
- LOCALIZED SIGNIFICANCE 33
- AIR QUALITY MANAGEMENT PLAN CONSISTENCY 35
- CUMULATIVE IMPACT 35
- MITIGATION MEASURES 36
- REFERENCES 42

APPENDICES

A. CONSTRUCTION EMISSIONS CALCULATIONS
B: URBEMIS2007 MODEL PRINTOUTS
C: GLOBAL WARMING EMISSIONS CALCULATIONS
D: CALINE4 CO HOT SPOTS MODEL PRINTOUTS

FIGURES AND TABLES

FIGURES

Figure 1: Project Location Map 3
Figure 2: Site Plan 4

TABLES

Table A: Ambient Air Quality Standards (AAQS) 6
Table B: Summary of Health Effects of the Major Criteria Air Pollutants 8
Table C: Attainment Status of Criteria Pollutants in the South Coast Air Basin 12
Table D: Ambient Air Quality at the San Bernardino Air Monitoring Station 16
Table E: Peak-Day Construction Emissions (lb/day) by Phase[1] 25
Table F: Operational Emissions 26
Table G: Long-Term Project Operational Emissions of CO_2 27
Table H: 100-Year GWP Estimates from the IPCC's Third (2001) Assessment Report 28
Table I: Long-Term Project Operational Emissions in Terms of CO_2eq 28
Table J: Existing CO Concentrations 30
Table K: 2009 CO Concentrations 31
Table L: 2013 CO Concentrations 32
Table M: 2030 CO Concentrations 33
Table N: Summary of Construction Emissions Localized Significance 34
Table O: Summary of Operation Emissions, Localized Significance 34

INTRODUCTION

This air quality impact analysis has been prepared to evaluate potential air quality impacts and mitigation measures associated with the proposed Church of the Woods project located in an unincorporated portion of San Bernardino County, California. The air quality study provides a discussion of the proposed project, the physical setting of the project area, and the regulatory framework for air quality. The analysis provides data on existing air quality, evaluates potential air quality impacts associated with the proposed project, and identifies mitigation measures recommended for potentially significant impacts. Modeled air quality levels are based upon vehicle data and project trip generation included in a traffic study prepared for the proposed project (LSA Associates, Inc. [LSA] June 2008).

The evaluation was prepared in conformance with appropriate standards, utilizing procedures and methodologies in the South Coast Air Quality Management District (SCAQMD) *CEQA* [California Environmental Quality Act] *Air Quality Handbook* (SCAQMD, April 1993).

PROJECT DESCRIPTION

The proposed site of the Church of the Woods is located in Rimforest, in unincorporated San Bernardino County. The site is approximately 38 acres and is located on the north side of State Route 18 (SR-18, Rim of the World Highway) between Bear Springs Road and Daley Canyon Road. There are currently no active land uses on site. Figure 1 shows the project location.

The proposed project consists of an 87,768-square-foot (sf) church facility with a 1,200-seat worship center and two playing fields that can be used for soccer or baseball. Figure 2 presents a conceptual site plan for the project. Access to the site will be provided by a driveway on SR-18. The project will widen SR-18 for approximately 300 feet on either side of the driveway to provide room for an eastbound left-turn lane and a westbound deceleration/acceleration lane.

Figure 1: Project Location Map

Figure 2: Site Plan

SETTING

METHODOLOGY RELATED TO AIR QUALITY IMPACT ASSESSMENT

Evaluation of air quality impacts associated with a proposed church/recreational facility typically includes the following:

- Determine the short-term construction air quality impacts
- Determine the long-term air quality impacts, including vehicular traffic, on on-site and off-site air quality-sensitive uses
- Determine mitigation measures required to reduce short-term and long-term, on-site air quality impacts from all sources

EXISTING ENVIRONMENTAL SETTING

The project site is located within the County of San Bernardino, which is part of the South Coast Air Basin (Basin) and is under the jurisdiction of SCAQMD. The air quality assessment for the proposed project includes estimating emissions associated with both short-term construction and long-term operation of the proposed project.

A number of air quality modeling tools are available to assess air quality impacts of projects. Moreover, certain air districts, such as the SCAQMD, have created guidelines and requirements for air quality analyses. The SCAQMD's current guidelines, included in its CEQA Air Quality Handbook (April 1993), were adhered to in the assessment of air quality impacts for the proposed project.

Regional Air Quality

Both the State of California and the federal government have established health-based ambient air quality standards (AAQS). As shown in Table A, these pollutants include ozone (O_3), carbon monoxide (CO), nitrogen dioxide (NO_2), sulfur dioxide (SO_2), particulate matter with a diameter of 10 microns or less (PM_{10}), and lead. In July 1997, the U.S. Environmental Protection Agency (EPA) adopted new standards for eight-hour ozone and for fine particulate matter less than 2.5 microns in diameter ($PM_{2.5}$). In addition, the State has set standards for sulfates, hydrogen sulfide, vinyl chloride, and visibility reducing particles. These standards are designed to protect the health and welfare of the populace with a reasonable margin of safety.

In addition to setting out primary and secondary AAQS, the State of California has established a set of episode criteria for O_3, CO, NO_2, SO_2, and PM_{10}. These criteria refer to episode levels representing periods of short-term exposure to air pollutants that actually threaten public health. Health effects are progressively more severe as pollutant levels increase from Stage One to Stage Three. Table B lists the health effects of these criteria pollutants and their potential sources. Because the concentration standards were set at a level that protects public health with an adequate margin of safety (EPA),

Table A: Ambient Air Quality Standards (AAQS)

Pollutant	Averaging Time	California Standards[1]		Federal Standards[2]		
		Concentration[3]	Method[4]	Primary[3,5]	Secondary[3,6]	Method[7]
Ozone (O_3)	1-Hour	0.09 ppm (180 μg/m^3)	Ultraviolet Photometry	-	Same as Primary Standard	Ultraviolet Photometry
	8-Hour	0.07 ppm (137 μg/m^3)		0.075 ppm (147 μg/m^3)		
Respirable Particulate Matter (PM_{10})	24-Hour	50 μg/m^3	Gravimetric or Beta Attenuation	150 μg/m^3	Same as Primary Standard	Inertial Separation and Gravimetric Analysis
	Annual Arithmetic Mean	20 μg/m^3		–		
Fine Particulate Matter ($PM_{2.5}$)	24-Hour	No Separate State Standard		35 μg/m^3	Same as Primary Standard	Inertial Separation and Gravimetric Analysis
	Annual Arithmetic Mean	12 μg/m^3	Gravimetric or Beta Attenuation	15 μg/m^3		
Carbon Monoxide (CO)	8-Hour	9.0 ppm (10 mg/m^3)	Non-Dispersive Infrared Photometry (NDIR)	9 ppm (10 mg/m^3)	None	Non-Dispersive Infrared Photometry (NDIR)
	1-Hour	20 ppm (23 mg/m^3)		35 ppm (40 mg/m^3)		
	8-Hour (Lake Tahoe)	6 ppm (7 mg/m^3)		–		
Nitrogen Dioxide (NO_2)	Annual Arithmetic Mean	0.030 ppm (57 μg/m^3)	Gas Phase Chemiluminescence	0.053 ppm (100 μg/m^3)	Same as Primary Standard	Gas Phase Chemiluminescence
	1-Hour	0.18 ppm (339 μg/m^3)		–		
Lead	30-day average	1.5 μg/m^3	Atomic Absorption	–	–	High-Volume Sampler and Atomic Absorption
	Calendar Quarter	–		1.5 μg/m^3	Same as Primary Standard	
Sulfur Dioxide (SO_2)	Annual Arithmetic Mean	–	Ultraviolet Fluorescence	0.030 ppm (80 μg/m^3)	–	Spectrophotometry (Pararosaniline Method)
	24-Hour	0.04 ppm (105 μg/m^3)		0.14 ppm (365 μg/m^3)	–	
	3-Hour	–		–	0.5 ppm (1300 μg/m^3)	
	1-Hour	0.25 ppm (655 μg/m^3)		–	–	
Visibility-Reducing Particles	8-Hour	Extinction coefficient of 0.23 per kilometer - visibility of 10 miles or more (0.07–30 miles or more for Lake Tahoe) due to particles when relative humidity is less than 70 percent. Method: Beta Attenuation and Transmittance through Filter Tape.		No Federal Standards		
Sulfates	24-Hour	25 μg/m^3	Ion Chromatography			
Hydrogen Sulfide	1-Hour	0.03 ppm (42 μg/m^3)	Ultraviolet Fluorescence			
Vinyl Chloride[8]	24-Hour	0.01 ppm (26 μg/m^3)	Gas Chromatography			

Source: ARB, June 26, 2008.

See footnotes on next page.

Footnotes:

1 California standards for ozone; carbon monoxide (except Lake Tahoe); sulfur dioxide (1- and 24-hour); nitrogen dioxide; suspended particulate matter, PM_{10}; and visibility-reducing particles are values not to be exceeded. All others are not to be equaled or exceeded. California ambient air quality standards are listed in the Table of Standards in Section 70200 of Title 17 of the California Code of Regulations.

2 National standards (other than ozone, particulate matter, and those based on annual averages or annual arithmetic mean) are not to be exceeded more than once a year. The ozone standard is attained when the fourth-highest 8-hour concentration in a year, averaged over three years, is equal to or less than the standard. For PM_{10}, the 24-hour standard is attained when the expected number of days per calendar year with a 24-hour average concentration above 150 mg/m^3 is equal to or less than one. For $PM_{2.5}$, the 24-hour standard is attained when 98 percent of the daily concentrations, averaged over three years, are equal to or less than the standard. Contact the EPA for further clarification and current federal policies.

3 Concentration expressed first in units in which it was promulgated. Equivalent units given in parentheses are based upon a reference temperature of 25°C and a reference pressure of 760 torr. Most measurements of air quality are to be corrected to a reference temperature of 25°C and a reference pressure of 760 torr; ppm in this table refers to ppm by volume, or micromoles of pollutant per mole of gas.

4 Any equivalent procedure that can be shown to the satisfaction of the ARB to give equivalent results at or near the level of the air quality standard may be used.

5 National Primary Standards: The levels of air quality necessary, with an adequate margin of safety to protect the public health.

6 National Secondary Standards: The levels of air quality necessary to protect the public welfare from any known or anticipated adverse effects of a pollutant.

7 Reference method as described by the EPA. An "equivalent method" of measurement may be used but must have a "consistent relationship to the reference method" and must be approved by the EPA.

8 The ARB has identified lead and vinyl chloride as "toxic air contaminants" with no threshold level of exposure for adverse health effects determined. These actions allow for the implementation of control measures at levels below the ambient concentrations specified for these pollutants.

°C = degrees Celsius
EPA = United States Environmental Protection Agency
$\mu g/m^3$ = micrograms per cubic meter
mg/m^3 = milligrams per cubic meter
ppm = parts per million

Table B: Summary of Health Effects of the Major Criteria Air Pollutants

Pollutants	Sources	Primary Effects
Ozone (O_3)	Atmospheric reaction of organic gases with nitrogen oxides in the presence of sunlight.	Aggravation of respiratory and cardiovascular diseases. Irritation of eyes. Impairment of cardiopulmonary function. Plant leaf injury.
Nitrogen Dioxide (NO_2)	Motor vehicle exhaust. High temperature stationary combustion. Atmospheric reactions.	Aggravation of respiratory illness. Reduced visibility. Reduced plant growth. Formation of acid rain.
Carbon Monoxide (CO)	By-products from incomplete combustion of fuels and other carbon containing substances, such as motor exhaust. Natural events, such as decomposition of organic matter.	Reduced tolerance for exercise. Impairment of mental function. Impairment of fetal development. Death at high levels of exposure. Aggravation of some heart diseases (angina).
Suspended Particulate Matter ($PM_{2.5}$ and PM_{10})	Stationary combustion of solid fuels. Construction activities. Industrial processes. Atmospheric chemical reactions.	Reduced lung function. Aggravation of the effects of gaseous pollutants. Aggravation of respiratory and cardiorespiratory diseases. Increased cough and chest discomfort. Soiling. Reduced visibility.
Sulfur Dioxide (SO_2)	Combustion of sulfur-containing fossil fuels. Smelting of sulfur-bearing metal ores. Industrial processes.	Aggravation of respiratory diseases (asthma, emphysema). Reduced lung function. Irritation of eyes. Reduced visibility. Plant injury. Deterioration of metals, textiles, leather, finishes, coatings, etc.
Lead (Pb)	Contaminated soil (e.g., from leaded fuels and lead-based paints).	Impairment of blood function and nerve construction. Behavioral and hearing problems in children.

Source: ARB 2001.

these health effects will not occur unless the standards are exceeded by a large margin or for a prolonged period of time. State AAQS are more stringent than federal AAQS. Among the pollutants, ozone (O_3) and particulate matter ($PM_{2.5}$ and PM_{10}) are considered regional pollutants, while the others have more localized effects.

The California Clean Air Act (CCAA) provides the SCAQMD with the authority to manage transportation activities at indirect sources. Indirect sources of pollution are generated when minor sources collectively emit a substantial amount of pollution. Examples of this are the motor vehicles at an intersection, a mall, and on highways. The SCAQMD also regulates stationary sources of pollution

throughout its jurisdictional area. Direct emissions from motor vehicles are regulated by the California Air Resources Board (ARB).

Climate/Meteorology. Air quality in the planning area is not only affected by various emission sources (mobile, industry, etc.) but also by atmospheric conditions like wind speed, wind direction, temperature, and rainfall. The combination of topography, low mixing height, abundant sunshine, and emissions from the second largest urban area in the United States gives the Basin the worst air pollution problem in the nation.

Climate in the Basin is determined by its terrain and geographical location. The Basin is a coastal plain with connecting broad valleys and low hills. The Pacific Ocean forms the southwestern border, and high mountains surround the rest of the Basin. The Basin lies in the semi-permanent high-pressure zone of the eastern Pacific; the resulting climate is mild and tempered by cool ocean breezes. This climatological pattern is rarely interrupted. However, periods of extremely hot weather, winter storms and Santa Ana wind conditions do occur.

The annual average temperature varies little throughout the Basin, ranging from the low to middle 60s, measured in degrees Fahrenheit. With a more pronounced oceanic influence, coastal areas show less variability in annual minimum and maximum temperatures than inland areas. The climatological station closest to the site is the Lake Arrowhead Station.[1] The monthly average maximum temperature recorded at this station from July 1948 to October 2006 ranged from 45.5 degrees Fahrenheit (°F) in January to 81.8°F in July, with an annual average maximum of 62.9 °F. The monthly average minimum temperature recorded at this station ranged from 29.1°F in January to 56.5°F in July, with an annual average minimum of 40.5°F. January is typically the coldest month, and July is typically the warmest month in this area of the Basin.

Most rainfall in the Basin occurs between November and April. Summer rainfall is minimal and is generally limited to scattered thundershowers in coastal regions and slightly heavier showers in the eastern portion of the Basin and along the coastal side of the mountains. The Lake Arrowhead climatological station monitored precipitation from July 1948 to October 2006. Average monthly rainfall during that period varied from 8.81 inches in January to 1.81 inch or less between May and October, with an annual total of 40.25 inches. Patterns in monthly and yearly rainfall totals are unpredictable due to fluctuations in the weather.

The Basin experiences a persistent temperature inversion (increasing temperature with increasing altitude) as a result of the Pacific high. This inversion limits the vertical dispersion of air contaminants, holding them relatively near the ground. As the sun warms the ground and the lower air layer, the temperature of the lower air layer approaches the temperature of the base of the inversion (upper) layer until the inversion layer finally breaks, allowing vertical mixing with the lower layer. This phenomenon is observed in mid-afternoon to late afternoon on hot summer days, when the smog appears to clear up suddenly. Winter inversions frequently break by mid-morning.

Winds in the Basin are predominantly with relatively low velocities. Wind speeds in the Basin average about 4 miles per hour (mph). Summer wind speeds average slightly higher than winter wind

[1] Western Regional Climate Center, www.wrcc.dri.edu.

speeds. Low average wind speeds, together with a persistent temperature inversion, limit the vertical dispersion of air pollutants throughout the Basin. Strong, dry, north, or northeasterly winds, known as Santa Ana winds, occur during the fall and winter months, dispersing air contaminants. The Santa Ana conditions tend to last for several days at a time.

The combination of stagnant wind conditions and low inversions produces the greatest pollutant concentrations. On days of no inversion or high wind speeds, ambient air pollutant concentrations are the lowest. During periods of low inversions and low wind speeds, air pollutants generated in urbanized areas are transported predominantly onshore into Riverside and San Bernardino Counties. In the winter, the greatest pollution problems are carbon monoxide and oxides of nitrogen, because of extremely low inversions and air stagnation during the night and early morning hours. In the summer, the longer daylight hours and the brighter sunshine combine to cause a reaction between hydrocarbons and oxides of nitrogen to form photochemical smog.

Global Warming. Global warming is the observed increase in the average temperature of the Earth's atmosphere and oceans in recent decades. The Earth's average near-surface atmospheric temperature rose 0.6 ± 0.2 degrees Celsius (°C) (1.1 ± 0.4 °F) in the 20th century. The prevailing scientific opinion on climate change is that most of the warming observed over the last 50 years is attributable to human activities.[1] The increased amounts of carbon dioxide (CO_2) and other greenhouse gases (GHGs) are the primary causes of the human-induced component of warming. They are released by the burning of fossil fuels, land clearing and agriculture, etc., and lead to an increase in the greenhouse effect.

GHGs are present in the atmosphere naturally, released by natural sources, or formed from secondary reactions taking place in the atmosphere. They include CO_2, methane, nitrous oxide (N_2O), and O_3. In the last 200 years, mankind has been releasing substantial quantities of GHGs into the atmosphere. These extra emissions are increasing GHG concentrations in the atmosphere, enhancing the natural greenhouse effect, which is believed to be causing global warming. While manmade GHGs include CO_2, methane, and N_2O, some gases, like chlorofluorocarbons (CFCs), are completely new to the atmosphere.

Natural sources of CO_2 include the respiration (breathing) of animals and plants and evaporation from the oceans. Together, these natural sources release approximately 150 billion tons of CO_2 each year, far outweighing the 7 billion tons of manmade emissions from fossil fuel burning, waste incineration, deforestation, and cement manufacture. Nevertheless, natural removal processes such as photosynthesis by land- and ocean-dwelling plant species, cannot keep pace with this extra input of manmade CO_2; consequently, the gas is building up in the atmosphere.

Methane is produced when organic matter decomposes in environments lacking sufficient oxygen. Natural sources include wetlands, termites, and oceans. Manmade sources include the mining and burning of fossil fuels, digestive processes in ruminant animals such as cattle, rice paddies, and the burying of waste in landfills. Total annual emissions of methane are approximately 500 million tons, with manmade emissions accounting for the majority. As with CO_2, the major removal process of

1. Intergovernmental Panel on Climate Change (IPCC), Climate Change 2001: The Scientific Basis, http://www.grida.no/climate/ipcc_tar/wg1/index.htm.

atmospheric methane—chemical breakdown in the atmosphere—cannot keep pace with source emissions, and methane concentrations in the atmosphere are increasing.

California is a substantial contributor of global GHGs, emitting over 400 million tons of CO_2 a year.[1] Climate studies indicate that California is likely to see an increase of 3–4°F over the next century. Because primary GHGs have a long lifetime in the atmosphere, accumulate over time, and are generally well mixed, their impact on the atmosphere is mostly independent of the point of emission.

Climate change refers to any significant change in measures of climate (such as temperature, precipitation, or wind) lasting for an extended period (decades or longer). Climate change may result from:

- Natural factors, such as changes in the sun's intensity or slow changes in the Earth's orbit around the sun;
- Natural processes within the climate system (e.g., changes in ocean circulation, reduction in sunlight from the addition of GHGs and other gases to the atmosphere from volcanic eruptions); and
- Human activities that change the atmosphere's composition (e.g., through burning fossil fuels) and the land surface (e.g., deforestation, reforestation, urbanization, desertification).

The impact of anthropogenic activities on global climate change is readily apparent in the observational record. For example, surface temperature data shows that 11 of the 12 years from 1995 to 2006 rank among the 12 warmest since 1850, the beginning of the instrumental record for global surface temperature.[2] In addition, the atmospheric water vapor content has increased since at least the 1980s over land, sea, and in the upper atmosphere, consistent with the capacity of warmer air to hold more water vapor; ocean temperatures are warmer to depths of 3,000 feet; and a marked decline has occurred in mountain glaciers and snow pack in both hemispheres, polar ice, and ice sheets in both the Arctic and Antarctic regions.

Air trapped by ice has been extracted from core samples taken from polar ice sheets to determine the global atmospheric variation of CO_2, methane (CH_4), and N_2O from before the start of industrialization (around 1750) to over 650,000 years ago. For that period, it was found that CO_2 concentrations ranged from 180 parts per million (ppm) to 300 ppm. For the period from around 1750 to the present, global CO_2 concentrations increased from a preindustrialization period concentration of 280 ppm to 379 ppm in 2005, with the 2005 value far exceeding the upper end of the preindustrial period range.

The primary effect of global climate change has been a rise in average global tropospheric temperature of 0.2°C per decade, determined from meteorological measurements worldwide between

1 California Energy Commission, *Inventory of California GHG Emissions and Sinks: 1990 to 2004*, 2006. http://www.energy.ca.gov/global_climate_change/inventory/documents/index.html.

2 Intergovernmental Panel on Climate Change, *Climate Change 2007: The Physical Science Basis, Summary for Policymakers*, February 2007.

1990 and 2005.[1] Climate change modeling using 2000 emission rates shows that further warming would occur, which would induce further changes in the global climate system during the current century.[2] Changes to the global climate system and ecosystems and to California would include, but would not be limited to:

- A loss of sea ice and mountain snow pack, resulting in higher sea levels and higher sea surface evaporation rates with a corresponding increase in tropospheric water vapor due to the atmosphere's ability to hold more water vapor at higher temperatures;[3]
- A rise in global average sea level primarily due to thermal expansion and melting of glaciers and ice caps in the Greenland and Antarctic ice sheets;[4]
- Changes in weather that include widespread changes in precipitation, ocean salinity, and wind patterns, and more energetic aspects of extreme weather, including droughts, heavy precipitation, heat waves, extreme cold, and the intensity of tropical cyclones;[5]
- A decline of Sierra snowpack, which accounts for approximately half of the surface water storage in California by 70 percent to as much as 90 percent over the next 100 years;[6]
- An increase in the number of days conducive to O_3 formation by 25–85 percent (depending on the future temperature scenario) in high ozone areas of Los Angeles and the San Joaquin Valley by the end of the 21st century;[7] and
- A high potential for erosion of California's coastlines and seawater intrusion into the delta and levee systems due to the rise in sea level.[8]

Air Pollution Constituents and Attainment Statns. The following describes the six criteria air pollutants and their attainment status in the Basin based on ARB's Area Designations (Activities and Maps) (http://www.arb.ca.gov/desig/desig.htm). Table C summarizes the attainment status in the Basin for the major criteria pollutants.

Ozone. O_3 (smog) is formed by photochemical reactions between nitrogen oxides (NO_X) and reactive organic gases (ROGs) rather than being directly emitted. O_3 is a pungent, colorless gas typical of Southern California smog. Elevated O_3 concentrations result in reduced lung function, particularly during vigorous physical activity. This health problem is particularly acute in sensitive receptors such as the sick, the elderly, and young children. O_3 levels peak during summer and early fall. Effective

1 Intergovernmental Panel on Climate Change, *Climate Change 2007: The Physical Science Basis, Summary for Policymakers*, February 2007.
2 Ibid.
3 Ibid.
4 Ibid.
5 Ibid.
6 California Environmental Protection Agency, *Climate Action Team, Climate Action Team Report to Governor Schwarzenegger and the Legislature (Executive Summary)*, March 2006.
7 Ibid.
8 Ibid.

Table C: Attainment Status of Criteria Pollutants in the South Coast Air Basin

Pollutant	State	Federal
O_3 1-hour	Nonattainment	Revoked June 2005
O_3 8-hour	Not Established	Severe 17 Nonattainment
PM_{10}	Nonattainment	Serious Nonattainment[1]
$PM_{2.5}$	Nonattainment	Nonattainment[2]
CO	Attainment	Attainment/Maintenance[3]
NO_2	Attainment	Attainment/Maintenance
All others	Attainment/Unclassified	Attainment/Unclassified

Source: California Air Resources Board (ARB), 2007 (http://www.arb.ca.gov/desig/desig.htm).

[1] In October 2006, the EPA, in its final rule revision, eliminated the annual PM_{10} standard.

[2] The $PM_{2.5}$ nonattainment designation is based on the 1997 standard. In 2006, the EPA revised the 24-hour standard. The 2006 $PM_{2.5}$ new standard of 35 $\mu g/m^3$ applies 1 year after the effective date of the new designation (April 2010).

[3] Effective June 11, 2007, the South Coast Air Basin was redesignated as attainment/maintenance for the federal CO standard.

$\mu g/m^3$ = micrograms per cubic meter
CO = carbon monoxide
EPA = United States Environmental Protection Agency
NO_2 = nitrogen dioxide
O_3 = ozone (smog)
PM_{10} = particulate matter less than 10 microns in size
$PM_{2.5}$ = particulate matter less than 2.5 microns in size

June 15, 2005, the EPA revoked in full the federal 1-hour ozone ambient air quality standard, including associated designations and classifications, in all areas except 14 early action compacts all outside California. The entire Basin is designated as a nonattainment area for the State 1-hour ozone standard. The EPA has designated the status in the Basin for the 8-hour ozone standard as "Severe 17," which means the Basin has until 2021 to attain the federal 8-hour ozone standard. SCAQMD has requested that the Basin's federal designation be changed from severe to extreme nonattainment. This change would extend the attainment deadline to 2023.

Carbon Monoxide. CO is formed by the incomplete combustion of fossil fuels, almost entirely from automobiles. It is a colorless, odorless gas that can cause dizziness, fatigue, and impairments to central nervous system functions. The entire Basin is designated as attainment/maintenance for the federal standard and maintenance for the State CO standard.

Nitrogen Oxides. NO_2, a reddish brown gas, and nitric oxide (NO), a colorless, odorless gas, are formed from fuel combustion under high temperature or pressure. These compounds are referred to as nitrogen oxides, or NO_X. NO_X is a primary component of the photochemical smog reaction. It also contributes to other pollution problems, including a high concentration of fine particulate matter, poor visibility, and acid deposition (i.e., acid rain). NO_2 decreases lung function and may reduce resistance to infection. The entire Basin has not exceeded both federal and State standards for NO_2 in the past five years with published monitoring data. It is designated a maintenance area under federal standards and an attainment area under State standards.

Sulfur Dioxide. SO_2 is a colorless, irritating gas formed primarily from incomplete combustion of fuels containing sulfur. Industrial facilities also contribute to gaseous SO_2 levels. SO_2 irritates the respiratory tract, can injure lung tissue when combined with fine particulate matter, and reduces visibility and the level of sunlight. The entire Basin is in attainment with both federal and State SO_2 standards.

Lead. Lead is found in old paints and coatings, plumbing, and a variety of other materials. Once in the bloodstream, lead can cause damage to the brain, nervous system, and other body systems. Children are highly susceptible to the effects of lead. The entire Basin is in attainment for federal and State lead standards.

Particulate Matter. Particulate matter is the term used for a mixture of solid particles and liquid droplets found in the air. Coarse particles, PM_{10}, derive from a variety of sources, including windblown dust and grinding operations. Fuel combustion and resultant exhaust from power plants and diesel buses and trucks are primarily responsible for fine particle, $PM_{2.5}$, levels. Fine particles can also be formed in the atmosphere through chemical reactions. PM_{10} can accumulate in the respiratory system and aggravate health problems such as asthma. The EPA's scientific review concluded that $PM_{2.5}$, which penetrates deeply into the lungs, is more likely than PM_{10} to contribute to the health effects listed in a number of recently published community epidemiological studies at concentrations that extend well below those allowed by current PM_{10} standards. These health effects include premature death and increased hospital admissions and emergency room visits (primarily the elderly and individuals with cardiopulmonary disease); increased respiratory symptoms and disease (children and individuals with cardiopulmonary disease such as asthma); decreased lung functions (particularly in children and individuals with asthma); and alterations in lung tissue and structure and in respiratory tract defense mechanisms. The entire Basin is a nonattainment area for federal and State PM_{10} and federal $PM_{2.5}$ standards. The $PM_{2.5}$ nonattainment designation is effective from April 5, 2005, and the conformity determination requirements are effective from April 5, 2006. In the 2007 AQMP, SCAQMD anticipated that the Basin will be in attainment for the $PM_{2.5}$ annual average federal air quality standard by the April 5, 2015, deadline.

Reactive Organic Compounds. Reactive organic compounds (ROCs) are formed from the combustion of fuels and evaporation of organic solvents. ROCs are not defined criteria pollutants but are a prime component of the photochemical smog reaction. Consequently, ROCs accumulate in the atmosphere more quickly during the winter, when sunlight is limited and photochemical reactions are slower. ROCs are also referred to as volatile organic compounds (VOCs).

Local Air Quality

The SCAQMD, together with the ARB, maintains ambient air quality monitoring stations in the Basin. The air quality monitoring station closest to the site is the San Bernardino station (located approximately 10 miles south of the project site), and its air quality trends are representative of the ambient air quality in the project area. As the San Bernardino Station does not monitor SO_2 concentrations, the data from the Fontana Station (located approximately 15 miles southwest of the

project site) was used for this analysis. The pollutants monitored are CO, O_3, PM_{10}, $PM_{2.5}$, NO_2, and SO_2.[1]

The ambient air quality data in Table D show that NO_2, SO_2, and CO levels are below relevant State and federal standards. The State standard was exceeded between 48 and 57 times per year in the past thr3ee years. The federal 8-hour O_3 standard was exceeded between 29 and 51 times per year in the past 3 years. The State 24-hour PM_{10} standard was exceeded from 20 to 26 days in each of the past 3 years and exceeded the federal 24-hour standard once in 2007. The federal 24-hour $PM_{2.5}$ standard was exceeded from 0 to 3 days per year for the past 3 years. Both State and federal annual average $PM_{2.5}$ standards have been exceeded every year for the past 3 years.

REGULATORY SETTINGS

Federal Regulations/Standards

Pursuant to the federal Clean Air Act (CAA) of 1970, the EPA established national ambient air quality standards (NAAQS) for six major pollutants, termed "criteria" pollutants. Criteria pollutants are defined as those pollutants for which the federal and State governments have established AAQS, or criteria, for outdoor concentrations in order to protect public health.

Data collected at permanent monitoring stations are used by the EPA to classify regions as "attainment" or "nonattainment," depending on whether the regions met the requirements stated in the primary NAAQS. Nonattainment areas have additional restrictions as required by the EPA.

The EPA has designated the Southern California Association of Governments (SCAG) as the Metropolitan Planning Organization (MPO) responsible for ensuring the Basin's compliance with the CAA.

The EPA established new national air quality standards for ground-level O_3 and $PM_{2.5}$ matter in 1997. On May 14, 1999, the Court of Appeals for the District of Columbia Circuit issued a decision ruling that the CAA, as applied in setting the new public health standards for O_3 and particulate matter, was unconstitutional as an improper delegation of legislative authority to the EPA. On February 27, 2001, the U.S. Supreme Court upheld the way the government sets air quality standards under the CAA. The court unanimously rejected industry arguments that the EPA must consider financial cost as well as health benefits in writing standards. The justices also rejected arguments that the EPA took lawmaking power from Congress when it set tougher standards for O_3 and particulate matter in 1997. Nevertheless, the court threw out the EPA's policy for implementing new O_3 rules, saying that the agency ignored a section of the law that restricts its authority to enforce such rules.

In April 2003, the EPA was cleared by the White House Office of Management and Budget (OMB) to implement the 8-hour ground-level O_3 standard. The EPA issued the proposed rule implementing the 8-hour O_3 standard in April 2003. The EPA completed final 8-hour nonattainment status on April 15, 2004.

[1] Air quality data, 2005–2007; EPA and ARB Web sites.

Table D: Ambient Air Quality at the San Bernardino Air Monitoring Station

Pollutant	Standard	2007	2006	2005
Carbon Monoxide (CO)				
Maximum 1-hr concentration (ppm)		3.7	2.8	3.8
Number of days exceeded:	State: > 20 ppm	0	0	0
	Federal: > 35 ppm	0	0	0
Maximum 8-hr concentration (ppm)		2.3	2.2	2.5
Number of days exceeded:	State: ≥ 9.0 ppm	0	0	0
	Federal: ≥ 9 ppm	0	0	0
Ozone (O_3)				
Maximum 1-hr concentration (ppm)		0.153	0.154	0.163
Number of days exceeded:	State: > 0.09 ppm	48	57	54
Maximum 8-hr concentration (ppm)		0.121	0.126	0.129
	Federal: > 0.08 ppm	51	29	31
Coarse Particulates (PM_{10})				
Maximum 24-hr concentration (μg/m^3)		219	92	72
Number of days exceeded:	State: > 50 μg/m^3	26	22	20
	Federal: > 150 μg/m^3	1	0	0
Annual arithmetic average concentration (μg/m^3)		54.2	46.0	42.3
Exceeded for the year:	State: > 20 μg/m^3	Y	Y	Y
	Federal: > 50 μg/m^3	Y	N	N
Fine Particulates ($PM_{2.5}$) [1]				
Maximum 24-hr concentration (μg/m^3)		72.1	55.0	106.2
	Federal: > 65 μg/m^3	3	0	1
Annual arithmetic average concentration (μg/m^3)		17.8	17.8	17.3
Exceeded for the year:	State: > 12 μg/m^3	Y	Y	Y
	Federal: > 15 μg/m^3	Y	Y	Y
Nitrogen Dioxide (NO_2)				
Maximum 1-hr concentration (ppm)		0.083	0.088	0.098
Number of days exceeded:	State: > 0.25 ppm	0	0	0
Annual arithmetic average concentration (ppm)		0.024	0.025	0.026
	Federal: > 0.053 ppm	N	N	N
Sulfur Dioxide (SO_2) [2]				
Maximum 1-hr concentration (ppm)		0.010	0.009	0.009
	State: > 0.25 ppm	0	0	0
Maximum 3-hr concentration (ppm)		0.004	0.004	0.006
	Federal: > 0.5 ppm	0	0	0
Maximum 24-hr concentration (ppm)		0.005	0.004	0.004
Number of days exceeded:	State: > 0.04 ppm	0	0	0
	Federal: > 0.14 ppm	0	0	0
Annual arithmetic average concentration (ppm)		0.002	0.002	0.002
Exceeded for the year:	Federal: > 0.030 ppm	N	N	N

Source: EPA and ARB, 2008.

[1] The exceedances of the federal 24-hour $PM_{2.5}$ standard are based on the old 65 μg/m^3 standard. In 2006 the EPA revised the standard to 35 μg/m^3.

[2] Data measured at the Fontana Station.

ARB = California Air Resources Board
EPA = United States Environmental Protection Agency
hr = hour
ppm = parts per million
μg/m^3 = microgram of pollutant per cubic meter of air

The EPA issued the final $PM_{2.5}$ implementation rule in fall 2004. The EPA issued final designations on December 14, 2004. The EPA lowered the 24-hour $PM_{2.5}$ standard from 65 to 35 micrograms per cubic meter ($\mu g/m^3$) and revoked the annual average PM_{10} standard in December 2006.

State Regulations/Standards

The State of California began to set California ambient air quality standards (CAAQS) in 1969 under the mandate of the Mulford-Carrell Act. The CAAQS are generally more stringent than the NAAQS. In addition to the six criteria pollutants covered by the NAAQS, there are CAAQS for sulfates, hydrogen sulfide, vinyl chloride, and visibility reducing particles. These standards are also listed in Table A.

Originally, there were no attainment deadlines for CAAQS. However, the CCAA of 1988 provided a time frame and a planning structure to promote their attainment. The CCAA required nonattainment areas in the State to prepare attainment plans and proposed to classify each such area on the basis of the submitted plan, as follows: moderate, if CAAQS attainment could not occur before December 31, 1994; serious, if CAAQS attainment could not occur before December 31, 1997; and severe, if CAAQS attainment could not be conclusively demonstrated at all.

The attainment plans are required to achieve a minimum 5 percent annual reduction in the emissions of nonattainment pollutants unless all feasible measures have been implemented. The Basin is currently classified a nonattainment area for four criteria pollutants.

Climate Change. In 1967, California's Legislature passed the Mulford-Carrell Act, which combined two Department of Health bureaus (the Bureau of Air Sanitation and the Motor Vehicle Pollution Control Board) to establish the Air Resources Board (ARB). Since its formation, the ARB has worked with the public, the business sector, and local governments to find solutions to California's air pollution problem. The resulting State air quality standards set by the ARB continue to outpace the rest of the nation and have prompted the development of new antismog technology for industrial facilities and motor vehicles.

California's major initiatives for reducing GHG emissions are outlined in Assembly Bill 32 (AB 32), the "Global Warming Solutions Act," passed by the California State legislature on August 31, 2006, a 2005 Executive Order, and a 2004 ARB regulation to reduce passenger car GHG emissions. These efforts aim at reducing GHG emissions to 1990 levels by 2020, a reduction of approximately 25 percent, and then an 80 percent reduction below 1990 levels by 2050. The main strategies for making these reductions are outlined in the Scoping Plan, which when completed will include a range of GHG reduction actions that can include direct regulations, alternative compliance mechanisms, monetary and nonmonetary incentives, voluntary actions, and market-based mechanisms such as a cap-and-trade system.

In June 2005, Governor Schwarzenegger established California's GHG emissions reduction targets in Executive Order S-3-05. The Executive Order established the following goals: GHG emissions should be reduced to 2000 levels by 2010; GHG emissions should be reduced to 1990 levels by 2020; and GHG emissions should be reduced to 80 percent below 1990 levels by 2050. On January 18, 2007, California further solidified its dedication to reducing GHGs by setting a new Low Carbon Fuel

Standard for transportation fuels sold within the State. Executive Order S-1-07 sets a declining standard for GHG emissions measured in CO_2 equivalent gram per unit of fuel energy sold in California. The target of the Low Carbon Fuel Standard is to reduce the carbon intensity of California passenger vehicle fuels by at least 10 percent by 2020.

Pursuant to the requirements of AB 32, the State's reduction in global warming emissions will be accomplished through an enforceable statewide cap on global warming emissions that will be phased in starting in 2012. The Act required ARB to identify a list of "discrete early action greenhouse gas reduction measures" by June 30, 2007 (Health and Safety Code Section 38560(a)). Once on the list, these measures are to be developed into regulatory proposals, adopted by the Board, and made enforceable by January 1, 2010. Additional early action items include a comprehensive framework of regulatory and nonregulatory elements that will result in significant and effective GHG emission reductions. ARB must prepare a plan demonstrating how the 2020 deadline can be met by January 1, 2009, or earlier. However, as immediate progress in reducing GHGs can and should be made, AB 32 directed ARB and the newly created Climate Action Team (CAT) to identify a list of "discrete early action GHG reduction measures" that can be adopted and made enforceable by January 1, 2010. CAT is a consortium of representatives from State agencies who have been charged with coordinating and implementing GHG emission reduction programs that fall outside of ARB's jurisdiction.

To address GHG emission and global climate change in General Plans and CEQA documents, Senate Bill 97 (Chapter 185, 2007) requires the Governor's Office of Planning and Research (OPR) to develop CEQA guidelines on how to address global warming emissions and mitigate project-specific GHG. OPR is required to prepare, develop, and transmit these guidelines on or before July 1, 2009. Until such a plan has been adopted, direction for evaluation of and potential mitigation for incremental project impacts to global warming is not available.

In a response to the transportation sector accounting for more than half of California's CO_2 emissions, Assembly Bill 1493 (AB 1493, Pavley) was enacted on July 22, 2002. AB 1493 requires ARB to set GHG emission standards for passenger vehicles, light duty trucks, and other vehicles determined to be vehicles whose primary use is noncommercial personal transportation in the State manufactured in 2009 and all subsequent model years. In setting these standards, the ARB considered cost effectiveness, technological feasibility, and economic impacts. ARB adopted the standards in September 2004. When fully phased in, the near-term (2009 to 2012) standards would result in a reduction of approximately 22 percent in GHG emissions compared to the emissions from the 2002 fleet, while the midterm (2013 to 2016) standards would result in a reduction of approximately 30 percent. Some currently used technologies that achieve GHG reductions include small engines with superchargers, continuously variable transmissions, and hybrid electric drive. To set its own GHG emissions limits on motor vehicles, California must receive a waiver from the EPA. The EPA denied the waiver in December 2007. In January 2008, the California Attorney General filed a petition for review of the EPA's decision in the Ninth Circuit Court of Appeals, though no decision on that petition has been made. Thus, California cannot enforce AB 1493 at this time.

REGIONAL AIR QUALITY PLANNING FRAMEWORK

The 1976 Lewis Air Quality Management Act established the SCAQMD and other air districts throughout the State. The federal CAA Amendments of 1977 required that each state adopt an

THRESHOLDS OF SIGNIFICANCE

A project would normally be considered to have a significant effect on air quality if it would violate any AAQS, contribute substantially to an existing air quality violation, expose sensitive receptors to substantial pollutants concentrations, or conflict with adopted environmental plans and goals of the community in which it is located.

In addition to the federal and State AAQS, there are daily and quarterly emissions thresholds for construction and operation of a proposed project in the Basin. The Basin is administered by the SCAQMD, and guidelines and emissions thresholds established by the SCAQMD in its CEQA Air Quality Handbook (SCAQMD, April 1993) are used in this analysis. It should be noted that the emission thresholds were established based on the attainment status of the air basin in regard to air quality standards for specific criteria pollutants. Because the concentration standards were set at a level that protects public health with an adequate margin of safety (EPA), these emission thresholds are regarded as conservative and would overstate an individual project's contribution to health risks.

Thresholds for Construction Emissions

The following CEQA significance thresholds for construction emissions have been established for the Basin:

- 75 pounds per day (lbs/day) of reactive organic compounds (ROCs)
- 100 lbs/day of NO_X
- 550 lbs/day of CO
- 150 lbs/day of PM_{10}
- 55 lbs/day of $PM_{2.5}$
- 150 lbs/day of sulfur oxides (SO_X)

Projects in the Basin with construction-related emissions that exceed any of the emission thresholds should be considered to be significant under CEQA.

Thresholds for Operational Emissions

The daily operational emissions "significance" thresholds for the Basin are as follows.

Emission Thresholds for Pollutants with Regional Effects. Projects with operations-related emissions that exceed any of the emission thresholds listed below are considered significant under the SCAQMD guidelines.

- 55 lbs/day of ROCs
- 55 lbs/day of NO_X
- 550 lbs/day of CO

- 150 lbs/day of PM_{10}
- 55 lbs/day of $PM_{2.5}$
- 150 lbs/day of SO_X

Local Microscale Concentration Standards. The significance of localized project impacts under CEQA depends on whether ambient CO levels in the vicinity of the project are above or below State and federal CO standards. If ambient levels are below the standards, a project is considered to have a significant impact if project emissions result in an exceedance of one or more of these standards. If ambient levels already exceed a State or federal standard, project emissions are considered significant if they increase 1-hour CO concentrations by 1.0 part per million (ppm) or more or 8-hour CO concentrations by 0.45 ppm or more. The following are applicable local emission concentration standards for CO:

- California State 1-hour CO standard of 20.0 ppm
- California State 8-hour CO standard of 9.0 ppm

Thresholds for Localized Significance

For this project, the appropriate Source Receptor Area (SRA) for localized significant thresholds (LSTs) is the West San Bernardino Valley, according to the SRA/City Table on the SCAQMD LST Web site.[1] The site is larger than 5 acres; however, it is expected that construction operations will not exceed 5 acres in any one day, so the 5-acre thresholds were used. The nearest existing sensitive receptor is approximately 90 feet (27 meters) away. The following thresholds apply for this project:

Construction thresholds for a 5-acre site at 25 meters:

- 439 lbs/day of NO_X
- 1,147 lbs/day of CO
- 14 lbs/day of PM_{10}
- 8 lbs/day of $PM_{2.5}$

Operational thresholds for a 5-acre site at 25 meters:

- 439 lbs/day of NO_X
- 1,147 lbs/day of CO
- 4 lbs/day of PM_{10}
- 1 lb/day of $PM_{2.5}$

[1] www.aqmd.gov/ceqa/handbook/LST/LST.html.

Global Warming

Global climate change may result in significant adverse effects to the environment that will be experienced worldwide, with some specific effects felt in California. AB 32 requires statewide GHG emissions reductions to 1990 levels by 2020. Though these statewide reductions are now mandated by law, no generally applicable GHG emission threshold has yet been established, nor will guidance on global climate change analysis in CEQA documents be available until mid-2009.

State CEQA Guidelines Section 15064(b) provides that the "determination of whether a project may have a significant effect on the environment calls for careful judgment on the part of the public agency involved, based to the extent possible on scientific and factual data," and further, that an "ironclad definition of significant effect is not always possible because the significance of an activity may vary with the setting." The State CEQA Guidelines further indicate that even when thresholds are established, they may include "identifiable quantitative, qualitative or performance level of a particular environmental effect[.]" (State CEQA Guidelines, Section 15064.7)

Some suggest that a zero emissions threshold would be appropriate in a climate change analysis; however, most feel that this would stop all progress and interfere with the ability of the economy to function. Further, prior CEQA case law makes clear that the "one additional molecule" rule is not consistent with CEQA (Communities for a Better Environment v. California Resources Agency, 103 Cal. App. 4th 98 (2002). Such a rule also appears inconsistent with the State's approach to mitigation of climate change impacts. AB 32 does not prohibit all new GHG emissions; rather, it requires a reduction in statewide emissions to a given level. Thus, AB 32 recognizes that GHG emissions will continue to occur.

The California Air Pollution Control Officers Association (CAPCOA) recently published a White Paper (January 2008) that explored several options for setting numeric, non-zero thresholds. The White Paper acknowledges medium to high uncertainty as to each potential numeric threshold "due to the uncertainty associated with the effectiveness of AB 32 implementation overall, the new character of GHG reduction strategies on a project basis, the immaturity of GHG reduction technologies or infrastructure (such as widespread biodiesel availability), and the uncertainty of GHG reduction effectiveness of certain technologies (such as scientific debate concerning the relative lifecycle GHG emissions of certain biofuels, for example)." When applied to residential examples, the thresholds discussed would range from approximately 50 single-family dwelling units to 2,600 residential units as screening thresholds; commercial thresholds would rely on square footage. Application of those thresholds, however, may first require enactment of a specific Climate Action Plan in a General Plan or other large-scale policy document. Based on the above, none of the potential numeric thresholds would be appropriate for application to this project. Thus, for the purposes of analyzing this project, and consistent with one of the CAPCOA's identified approaches to climate change analysis, the potential climate change impacts will be analyzed without setting a specific threshold.

Climate change is a global environmental problem; therefore, this study addresses climate change as a cumulative impact. To the extent possible, this study assesses potential sources of GHG emissions from the project and quantifies those emissions.

Bearing in mind that CEQA does not require "perfection" but instead "adequacy, completeness, and a good faith effort at full disclosure," the analysis below is based on methodologies and information available to the County at the time the study was prepared. Estimation of GHG emissions in the future

do not account for changes in technology that may reduce such emissions; therefore, the estimates are based on past performance and represent a scenario that is worse than that which is likely to be encountered. Additionally, as explained in greater detail below, many uncertainties exist regarding the precise relationship between specific levels of GHG emissions and the ultimate impact on global climate. Significant uncertainties also exist regarding the reduction potential of potential mitigation strategies. Thus, while information is presented below to assist the public and the County's decision makers in understanding the project's potential contribution to global climate change impacts, the information available to the County is not sufficiently detailed to allow a direct comparison between particular project characteristics and particular climate change impacts, nor between any particular proposed mitigation measure and any reduction in climate change impacts.

Because no applicable numeric thresholds have yet been defined, and because the precise causal link between an individual project's emissions and global climate change has not been developed, this study also identifies qualitative factors to determine whether this project's emissions should be considered "cumulatively considerable." Some of those qualitative factors compare the proposed project to potential "business as usual" conditions. Such comparison is appropriate in the case of this climate change analysis because the statewide GHG reduction strategy involves reducing future emissions compared to future emissions under a "business as usual" scenario. Until the County or other regulatory agency devises a generally applicable climate change threshold, the analysis used in this study may or may not be applicable to other County projects.

IMPACTS AND MITIGATION

Air pollutant emissions associated with the project would occur over the short term from construction activities, such as fugitive dust from site preparation and grading and emissions from equipment exhaust. There would be long-term regional emissions associated with project-related vehicular trips and stationary source emissions due to energy consumption, such as natural gas and electricity usage by the proposed project. Long-term local CO emissions at intersections in the project vicinity are not expected to be significantly affected by project-related traffic.

CONSTRUCTION IMPACTS

Construction activities produce combustion emissions from various sources such as utility engines, on-site heavy-duty construction vehicles, equipment hauling materials to and from the site, asphalt paving, and motor vehicles transporting the construction crew. Exhaust emissions from construction activities envisioned on site would vary daily as construction activity levels change. The use of construction equipment on site would result in localized exhaust emissions.

Construction activities associated with new development occurring on site would temporarily increase localized PM_{10}, $PM_{2.5}$, ROC, NO_X, and CO concentrations in the project vicinity. The primary sources of construction-related ROC and NO_X emissions are gasoline- and diesel-powered, heavy-duty mobile construction equipment such as scrapers and motor graders. Primary sources of PM_{10} and $PM_{2.5}$ emissions would be clearing activities, excavation and grading operations, construction vehicle traffic on unpaved ground, and wind blowing over exposed earth surfaces.

Emissions generated from construction activities are anticipated to cause temporary increases in pollutant concentrations that could contribute to the continuing violations of the federal and State maximum concentration standards. The frequency and concentrations of such violations would depend on several factors, including the soil composition on site, the amount of soil disturbed, wind speed, the number and type of machinery used, the construction schedule, and the proximity of other construction and demolition projects.

Based on the construction operation estimates provided by W.J. McKeever, Inc., the site would require approximately 295,000 cubic yards of cut and fill. The grading is anticipated to be balanced on site. Table E lists the construction emissions estimates. The construction emission calculations are included in Appendix A. It is assumed that grading will not start until site preparation is finished and, similarly, that building construction will not start until grading is finished. Table E shows that construction equipment/vehicle emissions during grading periods would exceed the SCAQMD NO_X threshold during the grading phase.

Table E: Peak-Day Construction Emissions (lbs/day) by Phase[1]

Construction Phase	CO	ROCs	NO_X	SO_X	PM_{10}[2]	$PM_{2.5}$	CO_2
Site Preparation	37.2	7.9	88.2	12.7	8.8	4.7	11,213
Grading	89.1	19.1	238.7	40.1	10.3	6.9	26,043
Building	38.1	8.2	66.7	5.0	4.0	3.7	17,574
Paving	55.2	10.0	86.1	7.7	4.3	4.0	19,460
SCAQMD Emission Threshold	**550**	**75**	**100**	**150**	**150**	**55**	**--**
Exceed Significance?	**NO**	**NO**	**YES**	**NO**	**NO**	**NO**	**NA**

Source: LSA Associates, Inc., July 2008.
[1] It is assumed that there is no overlap of these construction phases.
[2] Total PM_{10} daily emission rate with fugitive dust mitigation measures implemented.

CO = carbon monoxide
CO_2 = carbon dioxide
lbs/day = pounds per day
NA = not applicable
NO_X = nitrogen oxides
PM_{10} = particulate matter less than 10 microns in size
$PM_{2.5}$ = particulate matter less than 2.5 microns in size
ROCs = reactive organic compounds
SCAQMD = South Coast Air Quality Management District
SO_X = sulfur oxides

During construction as much as 26,043 lbs/day of CO_2 will be generated. This is much higher than the average daily emission rate, as it includes a maximum set of equipment, all of which will not often operate on a single day, as well as representing a maximum day in terms of overall activity level. Since the total construction period is expected to last no more than a year, this level of GHG emissions is not expected to be a significant contributor to the global climate.

Fugitive Dust

Fugitive dust emissions are generally associated with land clearing, exposure, and cut-and-fill operations. Dust generated daily during construction would vary substantially, depending on the level of activity, the specific operations, and weather conditions. Nearby sensitive receptors and on-site workers may be exposed to blowing dust, depending upon prevailing wind conditions. Fugitive dust also would be generated as construction equipment or trucks travel on unpaved areas of the construction site.

$PM_{2.5}$ and PM_{10} emissions from grading operations during a peak construction day are based on the LST analysis techniques published by SCAQMD (see Appendix A).

Architectural Coatings

Architectural coatings contain VOCs that are similar to ROCs and are part of the O_3 precursors. At this stage of project planning, no detailed architectural coatings information is available. Compliance with SCAQMD Rule 1113 on the use of architectural coatings should be considered sufficient. A very rough approximation of exterior wall area, based on planned floor space and ignoring the reduction for doors and windows, gives an approximate 80,000 sf area to cover. Using the SCAQMD CEQA VOC emission factor for architectural coatings of 2.08 pounds per gallon and assuming a 1-mil-thick coat translates to 18.5 pounds of VOC per 1,000 sf of coating. This predicts total project emissions of 1,480 pounds of VOC. Assuming a 1-month period of coating application and 22 workdays per

month, the result is a total of 67 pounds of VOC emitted per day from the application of architectural coatings. Architectural coatings would potentially occur while grading is being conducted within a different portion of the project site. When combined with the 19 pounds of ROC generated per day by the construction equipment, the total organic compounds released per day would be 86 pounds, exceeding the SCAQMD's 75 lbs/day construction threshold.

Summary of Construction Emissions

Based on the above information, with implementation of feasible measures during construction of the proposed project, emissions from construction equipment exhaust and soil disturbance would be minimized. Construction emissions from the project would exceed the daily emissions thresholds for NO_X and ROC established by the SCAQMD.

The emissions generated during the peak grading period (Table E) are anticipated to be much higher than the emissions generated during the construction of the on-site structures. Therefore, any emissions generated during periods of overlap between project operations and final construction would be lower than those shown in Table E.

LONG-TERM REGIONAL AIR QUALITY IMPACTS

Long-term air emission impacts are those associated with stationary sources and mobile sources related to any change related to the proposed project. The proposed development would consist of church facilities and recreational facilities. The stationary source emissions from this land use would come from its consumption of natural gas and electricity. Based on the traffic study prepared for this project (LSA, June 2008), the proposed project would generate 58 daily trips on Saturdays and 334 daily trips on Sundays in 2009 (opening year). In 2013 (project build-out) the proposed project would generate 58 daily trips on Saturdays and 800 daily trips on Sundays. Using the default emission factors included in URBEMIS2007 (Version 9.2.4), emissions associated with project-related vehicular trips were calculated and are included in Table F. As shown, the project's emissions would not exceed the SCAQMD daily emissions thresholds. Therefore, the proposed project's impact is less than significant, and no mitigation measures are required. The URBEMIS2007 model runs are included in Appendix B.

Global Warming

Annual operational emissions of CO_2, CH_4, and N_2O (from both project-related vehicles and stationary sources) for the proposed project are shown in Table G. GHG emission calculations are included in Appendix C.

Global warming potentials (GWPs) are used to compare the abilities of different GHGs to trap heat in the atmosphere. GWPs are based on the radiative efficiency (heat-absorbing ability) of each gas relative to that of CO_2, as well as the decay rate of each gas (the amount removed from the atmosphere over a given number of years) relative to that of CO_2. The GWP provides a construct for converting emissions of various gases into a common measure, which allows climate analysts to aggregate the radiative impacts of various GHGs into a uniform measure denominated in carbon or CO_2 equivalents.

Table F: Operational Emissions

Source	Pollutants, lbs/day						
	CO	ROGs	NO_X	SO_2	PM_{10}	$PM_{2.5}$	CO_2
2009 Opening Year							
Saturday: Soccer Complex	7.2	0.6	0.8	0.0	0.9	0.2	532.9
Sunday: Church	32.8	3.2	4.9	0.0	5.2	1.0	3,229.42
2009 Maximum Emissions	**32.8**	**3.2**	**4.9**	**0.0**	**5.2**	**1.0**	**3,229.42**
2013 Project Build-out							
Saturday: Soccer Complex	5.7	0.4	0.6	0.0	0.9	0.2	533.9
Sunday: Church	59.9	5.7	8.8	0.1	12.5	2.4	8,446.7
2013 Maximum Emissions	**59.9**	**5.7**	**8.8**	**0.1**	**12.5**	**2.4**	**8,446.7**
SCAQMD Threshold	**550**	**55**	**55**	**150**	**150**	**55**	**--**
Exceed SCAQMD Threshold?[1]	**No/No**	**No/No**	**No/No**	**No/No**	**No/No**	**No/No**	**NA**

Source: LSA Associates, Inc., July 2008.
[1] Reporting status for 2009/2013 scenarios.

CO = carbon monoxide
CO_2 = carbon dioxide
lbs/day = pounds per day
NA = not applicable
NO_X = nitrogen oxides
PM_{10} = particulate matter less than 10 microns in size
$PM_{2.5}$ = particulate matter less than 2.5 microns in size
ROGs = reaetive organic gases
SCAQMD = South Coast Air Quality Management District
SO_2 = sulfur dioxide

Table G: Long-Term Project Operational Emissions of CO_2

Emission Source	CO_2 Emissions (tons/year)	CH_4 Emissions (tons/year)	N_2O Emissions (tons/year)	Total CO_2eq. (tons/year)
Vehicles	1,100	0.075	0.11	1,100
Electricity production	150	0.0016	0.00091	150
Natural gas combustion	140	0.0028	0.0026	140
Total	1,390	0.079	0.11	1,390

Source: LSA Associates, Inc., July 2008.
CH4 = methane
CO_2 = carbon dioxide
CO_2eq. = carbon dioxide equivalents
N2O = nitrous oxide

The generally accepted authority on GWPs is the Intergovernmental Panel on Climate Change (IPCC). In 2001, the IPCC updated its estimates of GWPs for key GHGs. Table H lists the GWPs to calculate carbon dioxide equivalents (CO_2eq.).

Table I shows the CO_2, CH_4 and N_2O emissions recalculated as their CO_2eq. The first four lines of the table are all in units of tons per year. The fifth line lists the total project emissions of GHGs as CO_2eq. in units of teragrams (a trillion [10^{12}] grams or 1 million metric tons [tonnes]) per year (Tg/year). This is the standard metric unit used worldwide.

Due to the many uncertainties of the effects of increased GHG concentrations, there are no federal, State, or local emissions thresholds established for GHGs. According to a white paper on GHG emissions and global climate change prepared by the Association of Environmental Professionals

Table H: 100-Year GWP Estimates from the IPCC's Third (2001) Assessment Report

Gas	Atmospheric Lifetime (years)	2001 IPCC GWP
Carbon Dioxide	50 – 200	1
Methane	12 ± 3	23
Nitrous Oxide	120	296
HFC-23	264	12,000
HFC-125		3,400
HFC-134a	14.6	1,300
HFC-143a		4,300
HFC-152a	1.5	120
HFC-227ea		3,500
HFC-236fa		9,400
Perfluoromethane (CF_4)	50,000	5,700
Perfluoroethane (C_2F_6)	10,000	11,900
Sulfur Hexafluoride (SF_6)	3,200	22,200

Source: United States Department of Energy, http://www.eia.doe.gov/oiaf/1605/gwp.html.
GWP = global warming potential
IPCC = Intergovernmental Panel on Climate Change

Table I: Long-Term Project Operational Emissions in Terms of CO_2eq.

Emission Source	Total CO_2eq.
Vehicles (tons/year)	1,100
Electricity Production (tons/year)	150
Natural Gas Combustion (tons/year)	140
Total (tons/year)	1,390
Total (Tg/year)	0.0013
% of SCAG 2004 total CO_2eq. emissions	0.00074%
% of California 2004 total CO_2eq. emissions	0.00026%

Source: LSA Associates, Inc., July 2008.
CO_2eq. = carbon dioxide equivalents
SCAG = Southern California Association of Governments
Tg = teragrams

(AEP), total worldwide GHG emissions in 2004 was estimated to be 20,135 Tg CO_2eq., excluding emissions/removals from land use, land use change, and forestry.[1] In 2004, GHG emissions in the United States were 7,074.4 Tg CO_2eq. California is a substantial contributor of GHG, as it is the second largest contributor in the United States and the sixteenth largest in the world. In 2004, California produced 494 Tg CO_2eq.,[2] which is approximately 7 percent of United States emissions. The major source of GHG in California is transportation, contributing 41 percent of the State's total

1 Association of Environmental Professionals, Alternative Approaches to Analyzing Greenhouse Gas Emissions and Global Climate Change in CEQA Documents. Final, June 29, 2007.

2 California's estimated Gross Greenhouse Gas emissions without forestry or land use (emissions or sinks) as reported by the California Energy Commission on January 23, 2007 in *Revisions to the 1990 to 2004 Greenhouse Gas Emissions Inventory Report*, published in December 2006 (CEC-600-2006-013).

GHG emissions. Electricity generation is the second largest source, contributing 22 percent of the State's GHG emissions. In 2004, the entire SCAG region produced 177 Tg of CO_2eq. The last two lines of Table I show the percentage of the total emissions of GHG from the SCAG region and the State of California in 2004 (the most recent data available).

The emissions from project-related vehicle exhaust comprise approximately 79 percent of the total project CO_2eq. emissions; however, they are controlled by the State and federal governments and are outside the control of this project. The remaining 21 percent of the project CO_2eq. emissions are primarily from building heating systems and increased regional power plant electricity generation due to the project's electrical demands. These are both within the control of the project and will be minimized by compliance with State Title 24 regulations for building energy efficiency.

LONG-TERM MICROSCALE (CO HOT SPOT) ANALYSIS

Vehicular trips associated with the proposed project would contribute to the congestion at intersections and along roadway segments in the project vicinity. Localized air quality effects would occur when emissions from vehicular traffic increase in local areas as a result of the proposed project. The primary mobile source pollutant of local concern is CO, which is a direct function of vehicle idling time and, thus, traffic flow conditions. CO transport is extremely limited; it disperses rapidly with distance from the source under normal meteorological conditions. However, under certain extreme meteorological conditions, CO concentrations proximate to a congested roadway or intersection may reach unhealthful levels affecting local sensitive receptors (residents, school children, the elderly, hospital patients, etc). Typically, high CO concentrations are associated with roadways or intersections operating at unacceptable levels of service or with extremely high traffic volumes. In areas with high ambient background CO concentration, modeling is recommended to determine a project's effect on local CO levels.

The intersection vehicle turn volumes were used in the California Department of Transportation (Caltrans) CALINE4 model to evaluate local CO concentrations at intersections most affected by project traffic. Per EPA guidelines, the highest of the second-highest CO concentrations measured within the past 3 years were used as the background levels. At the San Bernardino Monitoring Station, the background concentrations are 3.3 ppm for the 1-hour period and 2.2 ppm for the 8-hour period.

The traffic analysis prepared by LSA Associates, Inc. (2008) evaluated the existing, opening year (2009), project build-out year (2013), and future (2030) traffic conditions in the project vicinity. To determine the proposed project's impact on the local air quality, the CO levels were modeled at six intersections in the project area. These six intersections represent the intersections with the highest traffic volumes in the project area. Tables J, K, L, and M list the CO concentrations that would result at the six intersections for the existing, opening year (2009), build-out year (2013), and future (2030) conditions, respectively. The CALINE4 model printouts are included in Appendix D.

Table J: Existing CO Concentrations[1]

Intersection	Receptor to Road Centerline Distance (Meters)	Existing 1-Hour CO Concentration (ppm)	Existing 8-Hour CO Concentration (ppm)	Exceeds State Standards	
				1-Hr	8-Hr
Daley Canyon Road and SR-189	8	4.2	2.8	No	No
	8	4.2	2.8	No	No
	8	4.2	2.8	No	No
	8	4.1	2.8	No	No
Bear Springs Road and SR-18	12	4.2	2.8	No	No
	12	4.2	2.8	No	No
	12	4.2	2.8	No	No
	12	4.2	2.8	No	No
Project Access and SR-18	12	4.2	2.8	No	No
	12	4.2	2.8	No	No
	10	4.2	2.8	No	No
	10	4.1	2.8	No	No
Daley Canyon Road and SR-18	12	4.4	3.0	No	No
	12	4.2	2.8	No	No
	12	4.2	2.8	No	No
	8	4.1	2.8	No	No
Daley Canyon Road and Daley Canyon Access	8	4.2	2.8	No	No
	8	4.1	2.8	No	No
	8	4.1	2.8	No	No
	8	4.1	2.8	No	No
Daley Canyon Access and SR-18	10	4.1	2.8	No	No
	10	4.0	2.7	No	No
	10	4.0	2.7	No	No
	8	4.0	2.7	No	No

Source: LSA Associates, Inc., July 2008.

[1] Includes ambient 1-hour concentration of 3.3 ppm and ambient 8-hour concentration of 2.2 ppm. Measured at the San Bernardino Monitoring Station.

CO = carbon monoxide
ppm = parts per million
SR-18 = State Route 18
SR-189 = State Route 189

Table K: 2009 CO Concentrations[1]

Intersection	Receptor to Road Centerline Distance (Meters)	Project Related Increase 1-Hour/8-Hour (ppm)	Without/With Project 1-Hour CO Concentration (ppm)	Without/With Project 8-Hour CO Concentration (ppm)	Exceeds State Standards	
					1-Hr	8-Hr
Daley Canyon Road and SR-189	8 / 8	0.2 / 0.1	4.3 / 4.5	2.9 / 3.0	No	No
	8 / 8	0.2 / 0.1	4.3 / 4.5	2.9 / 3.0	No	No
	8 / 8	0.1 / 0.1	4.3 / 4.4	2.9 / 3.0	No	No
	8 / 8	0.1 / 0.1	4.2 / 4.3	2.8 / 2.9	No	No
Bear Springs Road and SR-18	12 / 12	0.2 / 0.1	4.3 / 4.5	2.9 / 3.0	No	No
	12 / 12	0.1 / 0.1	4.3 / 4.4	2.9 / 3.0	No	No
	12 / 12	0.2 / 0.2	4.2 / 4.4	2.8 / 3.0	No	No
	12 / 12	0.2 / 0.2	4.2 / 4.4	2.8 / 3.0	No	No
Project Access and SR-18	12 / 12	0.2 / 0.1	4.3 / 4.5	2.9 / 3.0	No	No
	12 / 12	0.3 / 0.2	4.2 / 4.5	2.8 / 3.0	No	No
	10 / 10	0.3 / 0.2	4.2 / 4.5	2.8 / 3.0	No	No
	10 / 10	0.2 / 0.1	4.1 / 4.3	2.8 / 2.9	No	No
Daley Canyon Road and SR-18	12 / 12	0.2 / 0.2	4.5 / 4.7	3.0 / 3.2	No	No
	12 / 12	0.2 / 0.1	4.3 / 4.5	2.9 / 3.0	No	No
	8 / 8	0.2 / 0.2	4.2 / 4.4	2.8 / 3.0	No	No
	8 / 8	0.2 / 0.2	4.2 / 4.4	2.8 / 3.0	No	No
Daley Canyon Road and Daley Canyon Access	8 / 8	0.1 / 0.1	4.2 / 4.3	2.8 / 2.9	No	No
	8 / 8	0.1 / 0.1	4.2 / 4.3	2.8 / 2.9	No	No
	8 / 8	0.1 / 0.0	4.1 / 4.2	2.8 / 2.8	No	No
	8 / 8	0.1 / 0.0	4.1 / 4.2	2.8 / 2.8	No	No
Daley Canyon Access and SR-18	10 / 10	0.1 / 0.0	4.1 / 4.2	2.8 / 2.8	No	No
	10 / 10	0.1 / 0.1	4.0 / 4.1	2.7 / 2.8	No	No
	10 / 10	0.1 / 0.1	4.0 / 4.1	2.7 / 2.8	No	No
	8 / 8	0.0 / 0.0	4.0 / 4.0	2.7 / 2.7	No	No

Source: LSA Associates, Inc., July 2008.

[1] Includes ambient 1-hour concentration of 3.3 ppm and ambient 8-hour concentration of 2.2 ppm. Measured at the San Bernardino Monitoring Station.

CO = carbon monoxide
ppm = parts per million
SR-18 = State Route 18
SR-189 = State Route 189

Table L: 2013 CO Concentrations[1]

Intersection	Receptor to Road Centerline Distance (Meters)	Project Related Increase 1-Hour/8-Hour (ppm)	Without/With Project 1-Hour CO Concentration (ppm)	Without/With Project 8-Hour CO Concentration (ppm)	Exceeds State Standards	
					1-Hr	8-Hr
Daley Canyon Road and SR-189	8 / 8	0.2 / 0.1	4.1 / 4.3	2.8 / 2.9	No	No
	8 / 8	0.2 / 0.1	4.1 / 4.3	2.8 / 2.9	No	No
	8 / 8	0.2 / 0.1	4.0 / 4.2	2.7 / 2.8	No	No
	8 / 8	0.2 / 0.2	3.9 / 4.1	2.6 / 2.8	No	No
Bear Springs Road and SR-18	12 / 12	0.3 / 0.2	4.0 / 4.3	2.7 / 2.9	No	No
	12 / 12	0.2 / 0.1	4.0 / 4.2	2.7 / 2.8	No	No
	12 / 12	0.2 / 0.1	4.0 / 4.2	2.7 / 2.8	No	No
	12 / 12	0.2 / 0.1	4.0 / 4.2	2.7 / 2.8	No	No
Project Access and SR-18	12 / 12	0.5 / 0.3	4.1 / 4.6	2.8 / 3.1	No	No
	12 / 12	0.5 / 0.3	4.0 / 4.5	2.7 / 3.0	No	No
	10 / 10	0.4 / 0.3	4.0 / 4.4	2.7 / 3.0	No	No
	10 / 10	0.4 / 0.3	3.9 / 4.3	2.6 / 2.9	No	No
Daley Canyon Road and SR-18	12 / 12	0.5 / 0.4	4.2 / 4.7	2.8 / 3.2	No	No
	12 / 8	0.3 / 0.2	4.1 / 4.4	2.8 / 3.0	No	No
	8 / 8	0.4 / 0.3	4.0 / 4.4	2.7 / 3.0	No	No
	8 / 8	0.3 / 0.2	4.0 / 4.3	2.7 / 2.9	No	No
Daley Canyon Road and Daley Canyon Access	8 / 8	0.2 / 0.1	4.0 / 4.2	2.7 / 2.8	No	No
	8 / 8	0.2 / 0.1	4.0 / 4.2	2.7 / 2.8	No	No
	8 / 8	0.2 / 0.2	3.9 / 4.1	2.6 / 2.8	No	No
	8 / 8	0.2 / 0.2	3.9 / 4.1	2.6 / 2.8	No	No
Daley Canyon Access and SR-18	10 / 10	0.1 / 0.1	3.9 / 4.0	2.6 / 2.7	No	No
	10 / 10	0.1 / 0.0	3.8 / 3.9	2.6 / 2.6	No	No
	10 / 10	0.1 / 0.0	3.8 / 3.9	2.6 / 2.6	No	No
	8 / 8	0.1 / 0.0	3.8 / 3.9	2.6 / 2.6	No	No

Source: LSA Associates, Inc., July 2008.

[1] Includes ambient 1-hour concentration of 3.3 ppm and ambient 8-hour concentration of 2.2 ppm. Measured at the San Bernardino Monitoring Station.

CO = carbon monoxide
ppm = parts per million
SR-18 = State Route 18
SR-189 = State Route 189

Table M: 2030 CO Concentrations[1]

Intersection	Receptor to Road Centerline Distance (Meters)	Project Related Increase 1-Hour/8-Hour (ppm)	Without/With Project 1-Hour CO Concentration (ppm)	Without/With Project 8-Hour CO Concentration (ppm)	Exceeds State Standards	
					1-Hr	8-Hr
Daley Canyon Road and SR-189	8 / 8	0.1 / 0.1	3.7 / 3.8	2.5 / 2.6	No	No
	8 / 8	0.1 / 0.1	3.7 / 3.8	2.5 / 2.6	No	No
	8 / 8	0.0 / 0.0	3.7 / 3.7	2.5 / 2.5	No	No
	8 / 8	0.0 / 0.0	3.7 / 3.7	2.5 / 2.5	No	No
Bear Springs Road and SR-18	12 / 12	0.1 / 0.1	3.7 / 3.8	2.5 / 2.6	No	No
	12 / 12	0.0 / 0.0	3.7 / 3.7	2.5 / 2.5	No	No
	12 / 12	0.1 / 0.1	3.6 / 3.7	2.4 / 2.5	No	No
	12 / 12	0.1 / 0.1	3.6 / 3.7	2.4 / 2.5	No	No
Project Access and SR-18	12 / 12	0.2 / 0.1	3.7 / 3.9	2.5 / 2.6	No	No
	12 / 12	0.1 / 0.1	3.7 / 3.8	2.5 / 2.6	No	No
	10 / 10	0.1 / 0.1	3.7 / 3.8	2.5 / 2.6	No	No
	10 / 10	0.1 / 0.1	3.7 / 3.8	2.5 / 2.6	No	No
Daley Canyon Road and SR-18	12 / 12	0.2 / 0.1	3.8 / 4.0	2.6 / 2.7	No	No
	8 / 8	0.2 / 0.1	3.7 / 3.9	2.5 / 2.6	No	No
	8 / 8	0.1 / 0.1	3.7 / 3.8	2.5 / 2.6	No	No
	8 / 8	0.1 / 0.1	3.7 / 3.8	2.5 / 2.6	No	No
Daley Canyon Road and Daley Canyon Access	8 / 8	0.1 / 0.1	3.7 / 3.8	2.5 / 2.6	No	No
	8 / 8	0.1 / 0.1	3.7 / 3.8	2.5 / 2.6	No	No
	8 / 8	0.0 / 0.0	3.7 / 3.7	2.5 / 2.5	No	No
	8 / 8	0.0 / 0.0	3.7 / 3.7	2.5 / 2.5	No	No
Daley Canyon Access and SR-18	10 / 10	0.1 / 0.1	3.6 / 3.7	2.4 / 2.5	No	No
	10 / 10	0.0 / 0.0	3.6 / 3.6	2.4 / 2.4	No	No
	10 / 10	0.0 / 0.0	3.6 / 3.6	2.4 / 2.4	No	No
	8 / 8	0.0 / 0.0	3.6 / 3.6	2.4 / 2.4	No	No

Source: LSA Associates, Inc., July 2008.

[1] Includes ambient one-hour concentration of 3.3 ppm and ambient eight-hour concentration of 2.2 ppm. Measured at the San Bernardino Monitoring Station.

CO = carbon monoxide
ppm = parts per million
SR-18 = State Route 18
SR-189 = State Route 189

As shown in Tables J, K, L, and M, none of the six intersections analyzed would have 8-hour CO concentration exceeding federal and State standards of 9 ppm. The 1-hour CO concentration at these intersections would also be below the State standard of 20.0 ppm and below the federal standard of 35 ppm. The proposed project would contribute at most 0.5 ppm to the 1-hour and 0.3 ppm to the 8-hour CO concentrations at these intersections. The proposed project would not have a significant impact on local air quality for CO, and no mitigation measures would be required.

AIR QUALITY MANAGEMENT PLAN CONSISTENCY

An AQMP describes air pollution control strategies to be taken by a city/county or region classified as a nonattainment area. The main purpose of an AQMP is to bring the area into compliance with the requirements of federal and State air quality standards. CEQA requires that certain proposed projects be analyzed for consistency with the AQMP. For a project to be consistent with the 2007 AQMP, the pollutants emitted from the project should not exceed the SCAQMD daily threshold or cause a significant impact on air quality. However, if feasible mitigation measures are implemented and shown to reduce the impact level from significant to less than significant, the project is deemed consistent with the AQMP. The AQMP uses the assumptions and projections of local planning agencies to determine control strategies for regional compliance status. Since the AQMP is based on local General Plans, projects that are deemed consistent with the General Plan are usually found to be consistent with the AQMP. The proposed project site is currently designated for light industrial uses within the County of San Bernardino's General Plan. The proposed project would generate fewer traffic trips during weekday peak hours and very few on-site emissions when compared to an industrial development. In addition, the proposed project will not exceed the SCAQMD's long-term growth projections and emissions thresholds. Therefore, implementation of the project will not conflict with the 2007 AQMP, and no significant impacts will result.

CUMULATIVE IMPACT

The proposed project area is currently in nonattainment for O_3, PM_{10}, and $PM_{2.5}$. As shown in Table E, construction emissions would exceed the SCAQMD's threshold for NO_X (an O_3 precursor). Construction of the project would contribute cumulatively to the local and regional air pollutants, together with other projects under construction. Therefore, implementation of the proposed project would contribute to significant cumulative air quality impacts.

As shown in Table F, the proposed project's operational emissions would not exceed the SCAQMD's long-term emission thresholds. Therefore, the project would not contribute to a long-term cumulative air quality impact.

Greenhouse Gas Emissions

The project will generate emissions of GHGs, primarily in the form of vehicle exhaust and in the consumption of electricity and natural gas. There are no federal, State, or local emissions thresholds established for GHGs such as CO_2. The emissions from vehicle exhaust are controlled by the State and federal governments and are outside the control of this project. Emissions from building heating and electrical systems will be minimized by complying with the control measures listed below.

MITIGATION MEASURES

Standard Conditions

Construction Impacts. The project is required to comply with regional rules that assist in reducing short-term air pollutant emissions. SCAQMD Rule 403 requires that fugitive dust be controlled with best available control measures so that the presence of such dust does not remain visible in the atmosphere beyond the property line of the emission source. In addition, SCAQMD Rule 402 requires implementation of dust suppression techniques to prevent fugitive dust from creating a nuisance off site. Applicable dust suppression techniques from Rule 403 are summarized below. Implementation of these dust suppression techniques can reduce the fugitive dust generation (and thus the PM_{10} component). Compliance with these rules would reduce impacts on nearby sensitive receptors.

The following are the applicable Rule 403 Measures:

- Apply nontoxic chemical soil stabilizers according to manufacturers' specifications to all inactive construction areas (previously graded areas inactive for 10 days or more).
- Water active sites at least twice daily. (Locations where grading is to occur will be thoroughly watered prior to earthmoving.)
- All trucks hauling dirt, sand, soil, or other loose materials are to be covered or should maintain at least two feet of freeboard in accordance with the requirements of California Vehicle Code (CVC) Section 23114 (freeboard means vertical space between the top of the load and top of the trailer).
- Pave construction access roads at least 100 feet onto the site from main road.
- Traffic speeds on all unpaved roads shall be reduced to 15 mph or less.

Additional Mitigation Measures

A. Additional dust suppression measures in the SCAQMD CEQA Air Quality Handbook are included as part of the project's mitigation.

- Revegetate disturbed areas with native vegetation as soon as possible.
- All excavating and grading operations shall be suspended when wind speeds (as instantaneous gusts) exceed 25 mph.
- When visible soil materials are carried to adjacent streets, those streets shall be swept once per day to the extent necessary to remove the visible soil material (recommend water sweepers with reclaimed water).
- Install wheel washers where vehicles enter and exit unpaved roads onto paved roads, or wash trucks and any equipment leaving the site each trip.
- All on-site roads shall be paved as soon as feasible, watered periodically, or chemically stabilized.
- The area disturbed by clearing, grading, earthmoving, or excavation operations shall be minimized at all times.

B. The Construction Contractor shall select the construction equipment used on site based on low emission factors and high energy efficiency. The Construction Contractor shall ensure that construction grading plans include a statement that all construction equipment will be tuned and maintained in accordance with the manufacturer's specifications.

C. The Construction Contractor shall utilize electric or diesel powered equipment in lieu of gasoline powered engines where feasible.

D. The Construction Contractor shall ensure that construction grading plans include a statement that work crews will shut off equipment when not in use. During smog season (May through October), the overall length of the construction period will be extended, thereby decreasing the size of the area prepared each day, to minimize vehicles and equipment operating at the same time.

E. The Construction Contractor shall time the construction activities so as to not interfere with peak-hour traffic and minimize obstruction of through traffic lanes adjacent to the site; if necessary, a flagperson shall be retained to maintain safety adjacent to existing roadways.

F. The Construction Contractor shall support and encourage ridesharing and transit incentives for the construction crew.

G. Compliance with the SCAQMD Rule 1113 on the use of architectural coatings should be implemented. Emissions associated with architectural coatings would be reduced by complying with these rules and regulations, which include using pre-coated/natural colored building materials, using water-based or low-VOC coating, and using coating transfer or spray equipment with high transfer efficiency.

The above mitigation measures will reduce the construction impacts to the extent feasible.

Global Warming/Climate Change Control Measures

No significant construction or operational impacts from GHG emissions have been identified; however, the following measures have been included to list measures that could be implemented to minimize the emissions of these gases.

Construction Activities.

- **Construction Equipment Idling:** Limit unnecessary idling of construction equipment. A reduction in equipment idling would reduce fuel consumption and, therefore, GHG emissions.
    - **Control Measure:** Prior to issuance of any grading or building permit, the project plans and specifications shall include a statement that construction equipment shall be shut off when not in use and shall not idle for more than 15 minutes. The statement in the plans and specifications shall be reviewed and approved by the Planning Department.
- **Truck Idling:** Reduce construction truck idling to a minimum. A reduction in truck idling would reduce fuel consumption and, therefore, GHG emissions.

such that heat trausfer and thermal bridging is minimized. Documentation of compliance with this measure shall be provided to the Plauning Department and Building Official for review and approval. Installation of the identified design features or equipment will be confirmed by the County Building Official prior to issuance of certificate of occupancy.

- **Control Measure:** Limit air leakage through the structure or within the heating and cooling distribution system to minimize energy consumption. Documentation of compliance with this measure shall be provided to the Planning Department and Building Official for review and approval. Installation of the identified design features or equipment will be confirmed by the County Building Official prior to issuance of certificate of occupancy.
- **Control Measure:** Prior to issuance of a building permit, the applicant shall demonstrate that the design of the proposed buildings or structures incorporates ENERGY STAR rated windows or better. Documentation of compliance with this measure shall be provided to the Building Official for review and approval. Installation of the identified design features or equipment will be confirmed by the County Building Official prior to issuance of certificate of occupancy.
- **Control Measure:** Prior to issuance of a building permit, the applicant shall demonstrate that the design of the proposed buildings or structures incorporates ENERGY STAR rated space heating and cooling equipment or better. Documentation of compliance with this measure shall be provided to the County Building Official. Installation of the identified design features or equipment will be confirmed by the County Building Official prior to issuance of certificate of occupancy.
- **Control Measure:** Prior to issuance of a building permit, the applicant shall demonstrate that the design of the proposed buildings or structures incorporates ENERGY STAR rated light fixtures or better. Documentation of compliance with this measure shall be provided to the County Building Official for review and approval. Installation of the identified design features or equipment will be coufirmed by the County Building Official prior to issuance of certificate of occupancy.
- **Control Measure:** Prior to issuance of a building permit, the applicant shall demonstrate that the design of the proposed buildings or structures includes consideration of/installation/ operation of renewable electric generation systems. Documentation of compliance with this measure shall be provided to the County Building Official for review and approval. Installation of the identified design features or equipment will be confirmed by the County Building Official prior to issuance of certificate of occupancy.
- **Control Measure:** Prior to issuance of a building permit, the applicant shall demonstrate that the proposed building or structure designs incorporate energy efficient hot water systems. Documentation of compliance with this measure shall be provided to the County Building Official for review and approval. Installation of the identified design features or equipment will be confirmed by the County Building Official prior to issuance of certificate of occupancy.

- **Solar Panels:** Include design measures for future solar panels on main buildings. Solar panels would provide the buildings with a clean source of electricity to replace some of its fossil fuel-generated electricity use.
  - **Control Measure:** Prior to issuance of a building permit, the applicant shall demonstrate that provisions for future solar panels have been designed into all main buildings. Documentation

of compliance with this measure shall be provided to the County Building Official for review and approval.

- **Shade Trees:** Plant shade trees around main buildings, as allowed on the site plan, to reduce direct sunlight into the structure thus reducing solar heating.
  - **Control Measure:** Prior to issuance of a building permit, the applicant shall demonstrate that the landscape plan for the proposed buildings or structures includes the planting of shade trees around main buildings where practical, particularly along southern elevations. Documentation of compliance with this measure shall be provided to the County Building Official for review and approval.
- **Solid Waste Measures:** Maximize the reuse and recycling of waste. This would reduce GHG emissions because less material will have to be manufactured.
  - **Control Measure:** Prior to issuance of a building permit, the applicant shall demonstrate that the proposed building or structure designs incorporate interior and exterior storage areas for recyclables and green waste and adequate recycling containers located in public areas. Documentation of compliance with this measure shall be provided to the County Building Official for review and approval. Installation of the identified design features or equipment will be confirmed by the County Building Official prior to issuance of certificate of occupancy.
- **Water Conservation and Efficiency Measures:** Include design measures that maximize water conservation and efficiency to create water-efficient landscapes. This would reduce GHG emissions because less water will be used and wasted.
  - **Control Measure:** Prior to issuance of a building permit, the applicant shall demonstrate that the landscape plan for the proposed buildings or structures incorporate water-efficient irrigation systems and devices, such as soil moisture-based irrigation controls or irrigation controls that account for actual weather conditions. Documentation of compliance with this measure shall be provided to the County Building Official for review and approval. Installation of the identified design features or equipment will be confirmed by the County Building Official prior to issuance of certificate of occupancy.
  - **Control Measure:** Prior to issuance of a building permit, the applicant shall demonstrate that the landscape plan for the proposed buildings or structures use reclaimed water for landscape irrigation, including the infrastructure to deliver and use reclaimed water. Documentation of compliance with this measure shall be provided to the County Building Official for review and approval. Installation of the identified design features or equipment will be confirmed by the County Building Official prior to issuance of certificate of occupancy.
  - **Control Measure:** Prior to issuance of a building permit, the applicant shall demonstrate that the design of the proposed buildings or structures includes measures to be water-efficient, such as water-efficient fixtures and appliances. Documentation of compliance with this measure shall be provided to the County Building Official for review and approval. Installation of the identified design features or equipment will be confirmed by the County Building Official prior to issuance of certificate of occupancy.
- **Transportation and Motor Vehicle Measures:** Include design measures that maximize transportation and motor vehicle conservation and efficiency. This would reduce GHG emissions because less vehicle exhaust would be emitted.

- **Control Measure:** Prior to issuance of a building permit, the applicant shall demonstrate that measures have been included to promote ride sharing programs such as, but not necessarily including, publishing ride sharing information for all of the tenants, designating a certain percentage of parking spaces for ride sharing vehicles, designating adequate passenger loading/unloading and waiting areas for ride sharing vehicles, and providing a web site or message board for coordinating rides. Documentation of compliance with this measure shall be provided to the County Building Official for review and approval. Installation of the identified design features or equipment will be confirmed by the County Building Official prior to issuance of certificate of occupancy.
- **Control Measure:** Prior to issuance of a building permit, the applicant shall demonstrate that measures have been included to provide adequate bicycle parking near building entrances to promote cyclist safety, security, and convenience. Documentation of compliance with this measure shall be provided to the County Building Official for review and approval. Installation of the identified design features or equipment will be confirmed by the County Building Official prior to issuance of certificate of occupancy.

Building Operation Maintenance.

- **Compact Fluorescent Light Bulbs.** Fluorescent light bulbs produce less waste heat and use substantially less electricity than incandescent light bulbs.
  - **Control Measure:** Prior to issuance of any certificate of occupancy, the applicant shall demonstrate that all interior building lighting supports the use of compact fluorescent light bulbs to the satisfaction of the Building Official.
- **Energy Audits.** The applicant shall recommend to future tenants that they conduct a third party energy audit every 5 years and install innovative power-saving technology where feasible, such as power factor correction systems and lighting power regulators. Such systems help to maximize usable electric current and eliminate wasted electricity, thereby lowering overall electricity use.
  - **Control Measure:** The applicant shall recommend to future tenants that every 5 years after occupancy, that they provide a third party energy audit, and that innovative power saving technology identified as part of the audit shall be installed where feasible. The audit and any structural, mechanical or maintenance alterations implemented shall be provided to the County for review and approval by the Planning Department.
- **Truck Idling.** Reduce truck idling to a minimum. A reduction in truck idling would reduce fuel consumption and, therefore, GHG emissions.
  - **Control Measure:** Prior to issuance of any Conditional Use Permit (CUP), certificate of occupancy or business license, the CUP, certificate or license shall include a statement that on-road delivery trucks and other vehicles greater than 10,000 pounds shall be shut off when not in use and shall not idle for more than 5 minutes. The statement in the CUP shall be reviewed and approved by the Planning Department.

REFERENCES

California Air Resources Board web site: http://www.arb.ca.gov.

Caltrans 1988. Air Quality Technical Analysis Notes.

Caltrans 1997. Transportation Project-Level Carbon Monoxide Protocol.

LSA Associates, Inc., June 2008. Church of the Woods Traffic Analysis.

South Coast Air Quality Management District. CEQA Air Quality Handbook. 1993.

South Coast Air Quality Management District. Air Quality Management Plan. 2003 and 2007.

Western Regional Climate Center Web Site: http://www.wrcc.dri.edu.

APPENDIX A

CONSTRUCTION EMISSIONS CALCULATIONS

Summary of Five Acre Site Example Results By Phase

Total On-Site

	CO	NOx	PM10	PM2.5
Site Preparation	30.7	79.7	8.6	4.6
Grading	76.1	221.7	10.0	6.6
Building	22.5	46.3	3.7	3.4
Paving	23.9	45.3	3.6	3.3
Localized Significance Threshold*	1147	439	14	8
Exceed Significance?	NO	NO	NO	NO

* Thresholds for the West San Bernardino Valley (Area 37) Source Receptor Area (SRA) at 25 meters.

Total Regional

	CO	VOC	NOx	SOx	PM10	PM2.5
Site Preparation	37.2	7.9	88.2	12.7	8.8	4.7
Grading	89.1	19.1	238.7	40.1	10.3	6.9
Building	38.1	8.2	66.7	5.0	4.0	3.7
Paving	55.2	10.0	86.1	7.7	4.3	4.0
SCAQMD Emissions Threshold	**550**	**75**	**100**	**150**	**150**	**55**
Exceed Significance?	NO	NO	YES	NO	NO	NO

Construction Summary By Phase and Equipment

Site Preparation

Vehicle Description	No. of Vehicle	Hours	Trips	Length	CO	VOC	NOx	SOx	PM10	PM2.5
Rubber Tired Dozers	3	8.0			23	4.9	65	11	4.5	2.8
Tractors/Loaders/Backhoes	2	8.0			6.7	2.0	13	1.8	4.1	1.8
Haul Trucks			5	25	7	0.9	9	0.009	0.2	0.1
Water Trucks			3	6.9	1.1	0.15	1.4	0.0016	0.030	0.028
Worker Trips			24	40	15	0.61	2.4	0.013	0.15	0.11
Total Emissions					**37**	**7.9**	**88**	**12.7**	**8.8**	**4.7**
SCAQMD Emissions Threshold					**550**	**75**	**100**	**150**	**150**	**55**
Exceed Significance?					**NO**	**NO**	**NO**	**NO**	**NO**	**NO**

Grading

Vehicle Description	No. of Vehicle	Hours	Trips	Length	CO	VOC	NOx	SOx	PM10	PM2.5
Rubber Tired Dozers	4	8.0			30	6.5	87	14.5	3.5	3.2
Scrapers	4	8.0			24	6.1	84	15.9	0.0	0.0
Graders	4	8.0			17.3	3.6	43	8.8	2.2	2.0
Tractors/Loaders/Backhoes	1	8.0			3	1.0	6	0.9	4.3	1.4
Haul Trucks			10	25	13.1	1.8	17	0.019	0.31	0.29
Water Trucks			3	6.4	1.0	0.14	1.3	0.0014	0.020	0.018
Worker Trips			24	40	15	0.61	2.4	0.013	0.15	0.11
Total Emissions					**89**	**19.1**	**239**	**40**	**10.3**	**6.9**
SCAQMD Emissions Threshold					**550**	**75**	**100**	**150**	**150**	**55**
Exceed Significance?					**NO**	**NO**	**YES**	**NO**	**NO**	**NO**

Building of 100,000 Square Foot Structure

Vehicle Description	No. of Vehicle	Hours	Trips	Length	CO	VOC	NOx	SOx	PM10	PM2.5
Cranes	2	8.0			5.6	1.28	15.1	3.1	0.78	0.72
Forklifts	2	8.0			4.1	1.2	7	0.0	0.8	0.7
Tractors/Loaders/Backhoes	2	8.0			6.7	2.0	13	1.8	1.3	1.2
Generator Sets	2	8.0			5.0	1.44	10.2	0.0160	0.75	0.69
Electric Welders	1	8.0			N/A	N/A	N/A	N/A	N/A	N/A
Haul Trucks			10	30	15.7	2.18	20.5	0.0225	0.38	0.35
Water Trucks			3	6.4	1.0	0.14	1.3	0.0014	0.020	0.018
Worker Trips			24	40	15	0.61	2.4	0.013	0.15	0.11
Total Emissions					**38**	**8.2**	**67**	**5.0**	**4.0**	**3.7**
SCAQMD Emissions Threshold					**550**	**75**	**100**	**150**	**150**	**55**
Exceed Significance?					**NO**	**NO**	**NO**	**NO**	**NO**	**NO**

Asphalt Paving of Parking Lot

Vehicle Description	No. of Vehicle	Hours	Trips	Length	CO	VOC	NOx	SOx	PM10	PM2.5
Pavers	1	8.0			3.4	0.69	6.0	1.3	0.42	0.39
Rollers	2	8.0			5.8	1.09	10.4	2.2	0.74	0.68
Paving Equipment	2	8.0			6.5	1.7	14	2.3	1.04	0.96
Cement and Mortar Mixers	1	8.0			0.37	0.08	0.58	0.00	0.040	0.037
Tractors/Loaders/Backhoes	2	8.0			6.7	2.0	12.8	1.84	1.33	1.22
Haul Trucks			20	30	31	4.4	41	0.045	0.75	0.69
Water Trucks			3	6.4	1.0	0.14	1.3	0.0014	0.020	0.018
Worker Trips			24	40	15	0.61	2.4	0.013	0.15	0.11
Total Emissions					**55**	**10.0**	**86**	**7.7**	**4.3**	**4.0**
SCAQMD Emissions Threshold					**550**	**75**	**100**	**150**	**150**	**55**
Exceed Significance?					**NO**	**NO**	**NO**	**NO**	**NO**	**NO**

Summary of Five Acre Site Results By Phase and Equipment

Site Preparation

Vehicle Description	No. of Vehicle	Hours	Trips	Length	CO	NOx	PM10	PM2.5
Rubber Tired Dozers	3	8.0			23	65	4.5	2.8
Tractors/Loaders/Backhoes	2	8.0			6.7	13	4.1	1.8
Haul Trucks			5	0.1	0.03	0.03	0.0006	0.0006
Water Trucks			3	6.9	1.08	1.4	0.030	0.028
Total Onsite Emissions					**31**	**80**	**9**	**4.6**
Localized Significance Threshold*					**1,147**	**439**	**14**	**8**
Exceed Significance?					**NO**	**NO**	**NO**	**NO**

Grading

Vehicle Description	No. of Vehicle	Hours	Trips	Length	CO	NOx	PM10	PM2.5
Rubber Tired Dozers	4	8.0			30	87	3.5	3.2
Scrapers	4	8.0			24	84	0.0	0.0
Graders	4	8.0			17.3	43	2.2	2.0
Tractors/Loaders/Backhoes	1	8.0			3	6	4.3	1.4
Haul Trucks			10	0.1	0.052	0.068	0.0013	0.0012
Water Trucks			3	6.4	1.0	1.3	0.020	0.018
Total Onsite Emissions					**76**	**222**	**10.0**	**6.6**
Localized Significance Threshold*					**1,147**	**439**	**14**	**8**
Exceed Significance?					**NO**	**NO**	**NO**	**NO**

Building of 100,000 Square Foot Structure

Vehicle Description	No. of Vehicle	Hours	Trips	Length	CO	NOx	PM10	PM2.5
Cranes	2	8.0			5.6	15.1	0.78	0.72
Forklifts	2	8.0			4.1	7	0.8	0.7
Tractors/Loaders/Backhoes	2	8.0			6.7	13	1.3	1.2
Generator Sets	2	8.0			5.0	10.2	0.75	0.69
Electric Welders	1	8.0			N/A	N/A	N/A	N/A
Haul Trucks			10	0.1	0.052	0.068	0.0013	0.0012
Water Trucks			3	6.4	1.0	1.3	0.020	0.018
Total Onsite Emissions					**22**	**46**	**3.7**	**3.4**
Localized Significance Threshold*					**1,147**	**439**	**14**	**8**
Exceed Significance?					**NO**	**NO**	**NO**	**NO**

Asphalt Paving of Parking Lot

Vehicle Description	No. of Vehiele	Hours	Trips	Length	CO	NOx	PM10	PM2.5
Pavers	1	8.0			3.4	6.0	0.42	0.39
Rollers	2	8.0			5.8	10.4	0.74	0.68
Paving Equipment	2	8.0			6.5	14	1.04	0.96
Cement and Mortar Mixers	1	8.0			0.37	0.58	0.04	0.037
Tractors/Loaders/Backhoes	2	8.0			6.7	12.8	1.33	1.22
Haul Trucks			20	0.1	0.105	0.137	0.0025	0.0023
Water Trucks			3	6.4	1.0	1.3	0.020	0.018
Total Onsite Emissions					**24**	**45**	**3.6**	**3.3**
Localized Significance Threshold*					**1,147**	**439**	**14**	**8**
Exceed Significance?					**NO**	**NO**	**NO**	**NO**

* Thresholds for the West San Bernardino Valley (Area 37) Source Receptor Area (SRA) at 25 meters.

Five Acre Site - Site Preparation Phase

Construction Activity

Five Acre Site — Site Preparation 218,000 Square Feet[a]

Site Preparation Schedule - 20 days[a]

Equipment Type[a,b]	No. of Equipment	hr/day	Crew Size
Rubber Tired Dozers	3	8.0	10
Tractors/Loaders/Backhoes	2	8.0	

Construction Equipment Emission Factors

Equipment Type[c]	CO lb/hr	NOx lb/hr	PM10 lb/hr
Rubber Tired Dozers	0.952	2.728	0.108
Tractors/Loaders/Backhoes	0.420	0.799	0.083

Fugitive Dust Clearing Parameters

Silt Content[d]	Moisture Content[d]
6.9	7.9

Fugitive Dust Stockpiling Parameters

Silt Content[d]	Precipitation Days[e]	Mean Wind Speed Percent[f]	TSP Fraction	Area[g] (acres)
6.9	10	100	0.5	0.21

Fugitive Dust Material Handling

Aerodynamic Particle Size Multiplier[h]	Mean Wind Speed[i] mph	Moisture Content[d]	Dirt Handled[a] cy	Debris Handled[a] cy	Dirt Handled[j] lb/day
0.35	10	7.9	10,000	185	1,250,000

Construction Vehicle (Mobile Source) Emission Factors

	CO lb/mile	NOx lb/mile	PM10 lb/mile
Heavy-Duty Truck[k]	0.026167	0.034155	0.000626
	11.869	15.492	0.284

Five Acre Site - Site Preparation Phase

Construction Worker Number of Trips and Trip Length

Vehicle	No. of One-Way Trips/Day	One WayTrip Length (miles)
Haul Truck[l]	5	0.1
Water Truck[m]	3	6.9

Incremental Increase in Onsite Combustion Emissions from Construction Equipment

Equation: Emission Factor (lb/BHP-hr) x No. of Equipment x Work Day (hr/day) x Equipment rating (hp) x Load Factor (%/100) = Onsite Construction Emissions (lb/day)

Equipment Type	CO lb/day	NOx lb/day	PM10 lb/day
Rubber Tired Dozers	22.85	65.47	2.59
Tractors/Loaders/Backhoes	6.72	12.78	1.33
Total	**29.6**	**78.3**	**3.92**

Incremental Increase in Fugitive Dust Emissions from Construction Operations

Equations:

Clearing[n]: PM10 Emissions (lb/day) = 0.75 x (silt content$^{1.5}$)/(moisture content$^{1.4}$) x hours operated (hr/day) x (1 - control efficiency)

Storage Piles[o]: PM10 Emissions (lb/day) = 1.7 x (silt content/1.5) x ((365-precipitation days)/235) x wind speed percent/15 x TSP fraction x Area) x (1 - control efficiency)

Material Handling[p]: PM10 Emissions (lb/day) = (0.0032 x aerodynamic particle size multiplier x (wind speed (mph)/5)$^{1.3}$/(moisture content/2)$^{1.4}$ x dirt handled (lb/day)/2,000 (lb/ton) (1 - control efficiency)

Description	Control Efficiency %	Unmitigated PM10 lb/day	Mitigated PM10[q] lb/day
Clearing	68	6.02	1.93
Storage Piles	68	8.27	2.65
Material Handling	68	0.25	0.08
Total		**14.5**	**4.66**

Five Acre Site - Site Preparation Phase

Incremental Increase in Onsite Combustion Emissions from Onroad Mobile Vehicles

Equation: Emission Factor (lb/mile) x No. of One-Way Trips/Day x 2 x Trip length (mile) = Mobile Emissions (lb/day)

Vehicle	**CO** lb/day	**NOx** lb/day	**PM10** lb/day
Haul Truck	0.03	0.03	0.001
Water Truck	1.08	1.41	0.030
Total	**1.11**	**1.44**	**0.03**

Total Incremental Localized Emissions from Construction Activities

Sources	**CO** lb/day	**NOx** lb/day	**PM10** lb/day
On-site Emissions	**30.7**	**79.7**	**8.6**
Significance Threshold[r]	***1,147***	***439***	***14***
Exceed Significance?	**NO**	**NO**	**NO**

Notes:

Project specific data may be entered into shaded cells. Changing the values in the shaded cells will not affect the integrity of the worksheets. Verify that units of values entered match units for cell.

Adding lines or entering values with units different than those associated with the shaded cells may alter the integrity of the sheets or produce incorrect results.

a) SCAQMD, estimated from survey data, Sept 2004

b) Equipment name must match CARB Off-Road Model (see Off-Road Model EF worksheet) equipment name for sheet to look up EFs automatically.

c) SCAB values provided by the ARB, Aug 2004. Assumed equipment is diesel fueled.

d) USEPA, AP-42, July 1998, Table 11.9-3 Typical Values for Corection Factors Applicable to the Predictive Emission Factor Equations

e) Table A9-9-E2, SCAQMD CEQA Air Quality Handbook, 1993

f) Mean wind speed percent - percent of time mean wind speed exceeds 12 mph

g) Assumed storage piles are 0.21 acres in size

h) USEPA, AP-42, Jan 1995, Section 13.2.4 Aggretate Handling and Storage Piles, p 13.2.4-3 Aerodynamic particle size multiplier for < 10 μm

i) Mean wind speed - maximum of daily average wind speeds reported in 1981 meteorological data.

j) Assuming 10,000 cubic yards of dirt handled [(10,000 cyd x 2,500 lb/cyd)/20 days = 1,250,000 lb/day]

k) CARB, EMFAC2002 (version 2.2) Burden Model, Winter 2005, 75 F, 40% RH: EF, lb/yr = (EF, ton/yr x 2,000 lb/ton)/VMT

l) Assumed 30 cubic yd truck capacity 10,000 cyd of dirt and 185 cyd of debris [(10,185 cyd x truck/30 cyd)/20 days = 5 one-way truck trips]. Assumed haul truck travels 0.1 miles through facility

m) Assumed six foot wide water truck traverses over 218,000 square feet of disturbed area

n) USEPA, AP-42, July 1998, Table 11.9-1, Equation for bulldozer, overburden, ≤ 10 μm

o) USEPA, AP-42, Jan 1995, Section 13.2.4 Aggretate Handling and Storage Piles, Equation 1

p) USEPA, Fugitive Dust Background Doeument and Technical Information Document for Best Available Control Measures, Sept 1992, EPA-450/2-92-004, Equation 2-12

q) Includes watering at least three times a day per Rule 403 (68% control efficiency).

r) Thresholds for the West San Bernardino Valley (Area 37) Source Receptor Area (SRA) at 25 meters.

Five Acre Site - Grading Phase

Construction Activity

Five Acre Site — Grading 218,000 Square Feet[a]

Grading Schedule - 50 days[a]

Equipment Type[a,b]	No. of Equipment	hr/day	Crew Size
Rubber Tired Dozers	4	8.0	10
Scrapers	4	8.0	
Graders	4	8.0	
Tractors/Loaders/Backhoes	1	8.0	

Construction Equipment Emission Factors

Equipment Type[c]	CO lb/hr	NOx lb/hr	PM10 lb/hr
Rubber Tired Dozers	0.952	2.728	0.108
Scrapers	0.748	2.625	0.105
Graders	0.540	1.331	0.069
Tractors/Loaders/Backhoes	0.420	0.799	0.083

Fugitive Dust Grading Parameters

Vehicle Speed (mph)[d]	Vehicle Miles Traveled[e]
3	0.08

Fugitive Dust Stockpiling Parameters

Silt Content[f]	Precipitation Days[g]	Mean Wind Speed Percent[h]	TSP Fraction	Area[i] (acres)
6.9	10	100	0.5	0.21

Fugitive Dust Material Handling

Aerodynamic Particle Size Multiplier[j]	Mean Wind Speed[k] mph	Moisture Content[f]	Dirt Handled[a] cy	Dirt Handled[l] lb/day
0.35	10	7.9	295,000	14,750,000

Construction Vehicle (Mobile Source) Emission Factors

CO lb/mile	NOx lb/mile	PM10 lb/mile

Heavy-Duty Truck[m]	0.026167	0.034155	0.000626

Five Acre Site - Grading Phase

Construction Worker Number of Trips and Trip Length

Vehicle	No. of One-Way Trips/Day	One WayTrip Length (miles)
Haul Truck[n]	10	0.1
Water Truck[o]	3	6.4

Incremental Increase in Onsite Combustion Emissions from Construction Equipment

Equation: Emission Factor (lb/BHP-hr) x No. of Equipment x Work Day (hr/day) x Equipment rating (hp) x Load Factor (%/100) = Onsite Construction Emissions (lb/day)

Equipment Type	CO lb/day	NOx lb/day	PM10 lb/day
Rubber Tired Dozers	30.46	87.30	3.46
Scrapers	23.94	84.00	3.36
Graders	17.28	42.59	2.21
Tractors/Loaders/Backhoes	3.36	6.39	0.66
Total	**75.0**	**220.3**	**9.69**

Incremental Increase in Fugitive Dust Emissions from Construction Operations

Equations:

Grading[p]: PM10 Emissions (lb/day) = 0.60 x 0.051 x mean vehicle speed$^{2.0}$ x VMT x (1 - control efficiency)

Storage Piles[q]: PM10 Emissions (lb/day) = 1.7 x (silt content/1.5) x ((365-precipitation days)/235) x wind speed percent/15 x TSP fraction x Area) x (1 - control efficiency)

Material Handling[r]: PM10 Emissions (lb/day) = (0.0032 x aerodynamic particle size multiplier x (wind speed (mph)/5)$^{1.3}$/(moisture content/2)$^{1.4}$ x dirt handled (lb/day)/2,000 (lb/ton) (1 - control efficiency)

Description	Control Efficiency %	Unmitigated PM10 lb/day	Mitigated PM10[s] lb/day
Earthmoving	68	0.02	0.01
Storage Piles	68	8.27	2.65
Material Handling	68	2.97	0.95
Total		**11.26**	**3.61**

Incremental Increase in Onsite Combustion Emissions from Onroad Mobile Vehicles

Equation: Emission Factor (lb/mile) x No. of One-Way Trips/Day x 2 x Trip length (mile) = Mobile Emissions (lb/day)

Vehicle	CO lb/day	NOx lb/day	PM10 lb/day
Haul Truck	0.05	0.07	0.00
Water Truck	1.00	1.31	0.02
Total	**1.05**	**1.38**	**0.02**

Total Incremental Localized Emissions from Construction Activities

Sources	CO lb/day	NOx lb/day	PM10 lb/day
On-site Emissions	**76.1**	**221.7**	**13.3**
Significance Threshold[t]	***1,147***	***439***	***14***
Exceed Significance?	**NO**	**NO**	**NO**

Notes:

Project specific data may be entered into shaded cells. Changing the values in the shaded cells will not affect the integrity of the worksheets. Verify that units of values entered match units for cell.

Adding lines or entering values with units different than those associated with the shaded cells may alter the integrity of the sheets or produce incorrect results.

a) SCAQMD, estimated from survey data, Sept 2004

b) Equipment name must match CARB Off-Road Model (see Off-Road Model EF worksheet) equipment name for sheet to look up EFs automatically

c) SCAB values provided by the ARB, Aug 2004. Assumed equipment is diesel fueled.

d) Caterpillar Performance Handbook, Edition 33, October 2003 Operatiug Speeds, p 2-3.

e) Assuming 295,000 cubic yards of dirt handled [(295,000 cyd x 2,500 lb/cyd)/50 days = 14,750,000 lb/day]

f) USEPA, AP-42, July 1998, Table 11.9-3 Typical Values for Corection Factors Applicable to the Predictive Emission Factor Equations

g) Table A9-9-E2, SCAQMD CEQA Air Quality Handbook, 1993

h) Mean wiud speed percent - percent of time mean wind speed exceeds 12 mph. At least one meteorological site recorded wind speeds greater than 12 mph over a 24-hour period in 1981.

i) Assumed storage piles are 0.21 acres in size

j) USEPA, AP-42, Jan 1995, Section 13.2.4 Aggretate Handling and Storage Piles, p 13.2.4-3 Aerodynamie particle size multiplier for < 10 µm

k) Mean wind speed - maximum of daily average wind speeds reported in 1981 meteorological data.

l) Assuming 295,000 cubic yards of dirt handled [(295,000 cyd x 2,500 lb/cyd)/50 days = 14,750,000 lb/day]

m) CARB, EMFAC2002 (version 2.2) Burden Model, Winter 2005, 75 F, 40% RH: EF, lb/yr = (EF, ton/yr x 2,000 lb/ton)/VMT

n) Assumed 30 cubic yd truck capacity 295,000 cyd of dirt [(295,000 cyd x truck/30 cyd)/50 days = 10 one-way truck trips/day]. Assumed haul truck travels 0.1 miles through facility

o) Assumed six foot wide water truck traverses over 218,000 square feet of disturbed area

p) USEPA, AP-42, July 1998, Table 11.9-1, Equation for Site Grading ≤ 10 µm

q) USEPA, AP-42, Jan 1995, Section 13.2.4 Aggretate Handling and Storage Piles, Equation 1

r) USEPA, Fugitive Dust Background Document and Technical Information Document for Best Available Control Measures, Sept 1992, EPA-450/2-92-004, Equation 2-12

s) Includes watering at least three times a day per Rule 403 (68% control efficiency).

t) Thresholds for the West San Bernardino Valley (Area 37) Source Receptor Area (SRA) at 25 meters.

Five Acre Site - Structure Construction

	Construction Activity		
Five Acre Site	Building	100,000	Square Foot Structure[a]

Construction Schedule

Equipment Type[a,b]	No. of Equipment	hr/day	Crew Size
Cranes	2	8.0	20
Forklifts	2	8.0	
Tractors/Loaders/Backhoes	2	8.0	
Generator Sets	2	8.0	
Electric Welders	1	8.0	

Construction Equipment Combustion Emission Factors

Equipment Type[c]	CO lb/hr	NOx lb/hr	PM10 lb/hr
Cranes	0.350	0.941	0.049
Forklifts	0.254	0.432	0.048
Tractors/Loaders/Backhoes	0.420	0.799	0.083
Generator Sets	0.315	0.635	0.047
Electric Welders	N/A	N/A	N/A

Construction Vehicle (Mobile Source) Emission Factors

	CO lb/mile	NOx lb/mile	PM10 lb/mile
Heavy-Duty Truck[d]	0.026167	0.034155	0.000626

Construction Worker Number of Trips and Trip Length

Vehicle	No. of One-Way Trips/Day	Trip Length (miles)
Flatbed Truck[a,e]	10	0.1
Water Truck[f]	3	6.4

Five Acre Site - Structure Construction

Incremental Increase in Onsite Combustion Emissions from Construction Equipment

Equation: Emission Factor (lb/BHP-hr) x No. of Equipment x Work Day (hr/day) x Equipment rating (hp) x Load Factor (%/100) = Onsite Construction Emissions (lb/day)

Equipment Type	CO lb/day	NOx lb/day	PM10 lb/day
Cranes	5.60	15.06	0.78
Forklifts	4.06	6.91	0.77
Tractors/Loaders/Backhoes	6.72	12.78	1.33
Generator Sets	5.04	10.16	0.75
Electric Welders	N/A	N/A	N/A
Total	**21.4**	**44.9**	**3.6**

Incremental Increase in Onsite Combustion Emissions from Onroad Mobile Vehicles

Equation: Emission Factor (lb/mile) x No. of One-Way Trips/Day x 2 x Trip length (mile) = Mobile Emissions (lb/day)

Vehicle	CO lb/day	NOx lb/day	PM10 lb/day
Flatbed Truck	0.05	0.07	0.00
Water Truck	1.00	1.31	0.02
Total	**1.05**	**1.38**	**0.02**

Total Incremental Combustion Emissions from Construction Activities

Sources	CO lb/day	NOx lb/day	PM10 lb/day
On-Site Emissions	**22.5**	**46.3**	**3.7**
Significance Threshold[g]	***1,147***	***439***	***14***
Exceed Significance?	**NO**	**NO**	**NO**

Notes:

Project specific data may be entered into shaded cells. Changing the values in the shaded cells will not affect the integrity of the worksheets. Verify that units of values entered match units for cell.

Adding lines or entering values with units different than those associated with the shaded cells may alter the integrity of the sheets or produce incorrect results.

a) SCAQMD, estimated from survey data, Sept 2004

b) Equipment name must match CARB Off-Road Model (see Off-Road Model EF worksheet) equipment name for sheet to look up EFs automatically

c) SCAB values provided by the ARB, Aug 2004. Assumed equipment is diesel fueled except the welders which are powered by the generator.

d) CARB, EMFAC2002 (version 2.2) Burden Model, Winter 2005, 75 F, 40% RH: EF, lb/yr = (EF, ton/yr x 2,000 lb/ton)/VMT

e) Assumed haul truck travels 0.1 miles through facility

f) Assumed six foot wide water truck traverses over 200,000 square feet of disturbed area

g) Thresholds for the West San Bernardino Valley (Area 37) Source Receptor Area (SRA) at 25 meters.

Five Acre Site - Architectural Coating and Asphalt Paving

Five Acre Site	**Construction Activity**	Architectural Coating and Asphalt Paving of Parking Lot
Construction Schedule -	**20 days**[a]	

Equipment Type[a,b]	**No. of Equipment**	**hr/day**	**Crew Size**
Pavers	1	8.0	20
Rollers	2	8.0	
Paving Equipment	2	8.0	
Cement and Mortar Mixers	1	8.0	
Tractors/Loaders/Backhoes	2	8.0	

Construction Equipment Combustion Emission Factors

Equipment Type[c]	**CO** lb/hr	**NOx** lb/hr	**PM10** lb/hr
Pavers	0.429	0.745	0.053
Rollers	0.360	0.648	0.046
Paving Equipment	0.408	0.885	0.065
Cement and Mortar Mixers	0.046	0.072	0.005
Tractors/Loaders/Backhoes	0.420	0.799	0.083

Construction Vehicle (Mobile Source) Emission Factors

	CO lb/mile	**NOx** lb/mile	**PM10** lb/mile
Heavy-Duty Truck[d]	0.026167	0.034155	0.000626

Construction Worker Number of Trips and Trip Length

Vehicle	**No. of One-Way Trips/Day**	**Trip Length (miles)**
Delivery Truck[e]	20	0.1
Water Truck[f]	3	6.4

Five Acre Site - Architectural Coating and Asphalt Paving

Incremental Increase in Onsite Combustion Emissions from Construction Equipment

Equation: Emission Factor (lb/BHP-hr) x No. of Equipment x Work Day (hr/day) x Equipment rating (hp) x Load Factor (%/100) = Onsite Construction Emissions (lb/day)

Equipment Type	CO lb/day	NOx lb/day	PM10 lb/day
Pavers	3.43	5.96	0.42
Rollers	5.76	10.37	0.74
Paving Equipment	6.53	14.16	1.04
Cement and Mortar Mixers	0.37	0.58	0.04
Tractors/Loaders/Backhoes	6.72	12.78	1.33
Total	**22.8**	**43.8**	**3.6**

Incremental Increase in Onsite Combustion Emissions from Onroad Mobile Vehicles

Equation: Emission Factor (lb/mile) x No. of One-Way Trips/Day x 2 x Trip length (mile) = Mobile Emissions (lb/day)

Vehicle	CO lb/day	NOx lb/day	PM10 lb/day
Delivery Truck	0.10	0.14	0.00
Water Truck	1.00	1.31	0.02
Total	**1.10**	**1.45**	**0.02**

Total Incremental Combustion Emissions from Construction Activities

Sources	CO lb/day	NOx lb/day	PM10 lb/day
On-Site Emissions	**23.9**	**45.3**	**3.6**
Significance Threshold[g]	***1,147***	***439***	***14***
Exceed Significance?	**NO**	**NO**	**NO**

Notes:

Project specific data may be entered into shaded cells. Changing the values in the shaded cells will not affect the integrity of the worksheets. Verify that units of values entered match units for cell.

Adding lines or entering values with units different than those associated with the shaded cells may alter the integrity of the sheets or produce incorrect results.

a) SCAQMD, estimated from survey data, Sept 2004

b) Equipment name must match CARB Off-Road Model (see Off-Road Model EF worksheet) equipment name for sheet to look up EFs automatically

c) SCAB values provided by the ARB, Aug 2004. Assumed equipment is diesel fueled except the welders which are powered by the generator.

d) CARB, EMFAC2002 (version 2.2) Burden Model, Winter 2005, 75 F, 40% RH: EF, lb/yr = (EF, ton/yr x 2,000 lb/ton)/VMT

e) Assumed haul truck travels 0.1 miles through facility

f) Assumed six foot wide water truck traverses over 200,000 square feet of disturbed area

g) Thresholds for the West San Bernardino Valley (Area 37) Source Receptor Area (SRA) at 25 meters.

Summary of Five Acre Site Example Results By Phase

Total Regional

	CO2
Site Preparation	11,213
Grading	26,043
Building	17,574
Paving	19,460

Regional Construction Summary By Phase and Equipment

Site Preparation

Vehicle Description	No. of Vehicle	Hours	Trips	Length	CO2
Rubber Tired Dozers	3	8.0			5,270
Tractors/Loaders/Backhoes	2	8.0			3,513
Haul Trucks			5	25	786
Water Trucks			3	6.9	130
Worker Trips			24	40	1,514
Total Emissions					**11,213**

Grading

Vehicle Description	No. of Vehicle	Hours	Trips	Length	CO2
Rubber Tired Dozers	4	8.0			7,027
Scrapers	4	8.0			7,027
Graders	4	8.0			7,027
Tractors/Loaders/Backhoes	1	8.0			1,757
Haul Trucks			10	25	1,572
Water Trucks			3	6.4	121
Worker Trips			24	40	1,514
Total Emissions					**26,043**

Building of 100,000 Square Foot Structure

Vehicle Description	No. of Vehicle	Hours	Trips	Length	CO2
Cranes	2	8.0			3,513
Forklifts	2	8.0			3,513
Tractors/Loaders/Backhoes	2	8.0			3,513
Generator Sets	2	8.0			3,513
Haul Trucks			10	30	1,886
Water Trucks			3	6.4	121
Worker Trips			24	40	1,514
Total Emissions					**17,574**

Architectural Coating and Asphalt Paving of Parking Lot

Vehicle Description	No. of Vehicle	Hours	Trips	Length	CO2
Pavers	1	8.0			1,757
Rollers	2	8.0			3,513
Paving Equipment	2	8.0			3,513
Cement and Mortar Mixers	1	8.0			1,757
Tractors/Loaders/Backhoes	2	8.0			3,513
Haul Trucks			20	30	3,773
Water Trucks			3	6.4	121
Worker Trips			24	40	1,514
Total Emissions					**19,460**

Five Acre Site - Site Preparation Phase

Construction Activity

Five Acre Site — Site Preparation 218,000 Square Feet[a]

Site Preparation Schedule - 20 days[a]

Equipment Type[a,b]	No. of Equipment	hr/day	Crew Size
Rubber Tired Dozers	3	8.0	10
Tractors/Loaders/Backhoes	2	8.0	

Construction Equipment Emission Factors

Equipment Type[c]	CO2 lb/hr
Rubber Tired Dozers	220
Tractors/Loaders/Backhoes	220

Construction Vehicle (Mobile Source) Emission Factors

	CO2 lb/mile	Road Speed MPH
Heavy-Duty Truck[k]	3.143967	45

Five Acre Site - Site Preparation Phase

Incremental Increase in Onsite Combustion Emissions from Onroad Mobile Vehicles

Equation: Emission Factor (lb/mile) x No. of One-Way Trips/Day x 2 x Trip length (mile) = Mobile Emissions (lb/day)

Vehicle	**CO2** lb/day
Haul Truck	3
Water Truck	130
Total	**133**

Total Incremental Localized Emissions from Construction Activities

Sources	**CO2** lb/day
On-site Emissions	**8,916**
Significance Threshold[r]	
Exceed Significance?	

Five Acre Site - Grading Phase

Construction Activity

Five Acre Site — Grading 218,000 Square Feet[a]

Grading Schedule - 50 days[a]

Equipment Type[a,b]	No. of Equipment	hr/day	Crew Size
Rubber Tired Dozers	4	8.0	10
Scrapers	4	8.0	
Graders	4	8.0	
Tractors/Loaders/Backhoes	1	8.0	

Construction Equipment Emission Factors

Equipment Type[c]	CO2 lb/hr
Rubber Tired Dozers	220
Scrapers	220
Graders	220
Tractors/Loaders/Backhoes	220

Construction Vehicle (Mobile Source) Emission Factors

	CO2 lb/mile	Road Speed MPH
Heavy-Duty Truck[m]	3.143967	45

Five Acre Site - Grading Phase

Construction Worker Number of Trips and Trip Length

Vehicle	No. of One-Way Trips/Day	One WayTrip Length (miles)
Haul Truck[n]	10	0.1
Water Truck[o]	3	6.4

Incremental Increase in Onsite Combustion Emissions from Construction Equipment

Equation: Emission Factor (lb/BHP-hr) x No. of Equipment x Work Day (hr/day) x Equipment rating (hp) x Load Factor (%/100) = Onsite Construction Emissions (lb/day)

Equipment Type	CO2 lb/day
Rubber Tired Dozers	7,027
Graders	7,027
Tractors/Loaders/Backhoes	1,757
Total	**15,810**

Five Acre Site - Grading Phase

Incremental Increase in Onsite Combustion Emissions from Onroad Mobile Vehicles

Equation: Emission Factor (lb/mile) x No. of One-Way Trips/Day x 2 x Trip length (mile) = Mobile Emissions (lb/day)

Vehicle	**CO2** lb/day
Haul Truck	6
Water Truck	121
Total	**127**

Total Incremental Localized Emissions from Construction Activities

Sources	**CO2** lb/day
On-site Emissions	**15,937**
Significance Threshold[t]	
Exceed Significance?	

Five Acre Site - Structure Construction

Construction Activity

Five Acre Site — Building 100,000 Square Foot Structure[a]

Construction Schedule

Equipment Type[a,b]	No. of Equipment	hr/day	Crew Size
Cranes	2	8.0	20
Forklifts	2	8.0	
Tractors/Loaders/Backhoes	2	8.0	
Generator Sets	2	8.0	
Electric Welders	1	8.0	

Construction Equipment Combustion Emission Factors

Equipment Type[c]	CO2 lb/hr
Cranes	220
Forklifts	220
Tractors/Loaders/Backhoes	220
Generator Sets	220
Electric Welders	

Construction Vehicle (Mobile Source) Emission Factors

	CO2 lb/mile	Road Speed MPH
Heavy-Duty Truck[d]	3.143967	45

Construction Worker Number of Trips and Trip Length

Vehicle	No. of One-Way Trips/Day	Trip Length (miles)
Flatbed Truck[a,e]	10	0.1
Water Truck[f]	3	6.4

Five Acre Site - Structure Construction

Incremental Increase in Onsite Combustion Emissions from Construction Equipment

Equation: Emission Factor (lb/BHP-hr) x No. of Equipment x Work Day (hr/day) x Equipment rating (hp) x Load Factor (%/100) = Onsite Construetion Emissions (lb/day)

Equipment Type	**CO2** lb/day
Cranes	3,513
Forklifts	3,513
Tractors/Loaders/Backhoes	3,513
Generator Sets	3,513
Electric Welders	N/A
Total	**14,053**

Incremental Increase in Onsite Combustion Emissions from Onroad Mobile Vehicles

Equation: Emission Factor (lb/mile) x No. of One-Way Trips/Day x 2 x Trip length (mile) = Mobile Emissions (lb/day)

Vehicle	**CO2** lb/day
Flatbed Truck	6
Water Truck	121
Total	**127**

Total Incremental Combustion Emissions from Construction Activities

Sources	**CO2** lb/day
On-Site Emissions	**14,180**
Significance Threshold[g]	
Exceed Significance?	

Five Acre Site - Architectural Coating and Asphalt Paving

	Construction Activity
Five Acre Site	Architectural Coating and Asphalt Paving of Parking Lot
Construction Schedule -	**20 days**[a]

Equipment Type[a,b]	No. of Equipment	hr/day	Crew Size
Pavers	1	8.0	20
Rollers	2	8.0	
Paving Equipment	2	8.0	
Cement and Mortar Mixers	1	8.0	
Tractors/Loaders/Backhoes	2	8.0	

Construction Equipment Combustion Emission Factors

Equipment Type[c]	CO2 lb/hr
Pavers	220
Rollers	220
Paving Equipment	220
Cement and Mortar Mixers	220
Tractors/Loaders/Backhoes	220

Construction Vehicle (Mobile Source) Emission Factors

	CO2 lb/mile	Road Speed MPH
Heavy-Duty Truck[d]	3.143967	45

Construction Worker Number of Trips and Trip Length

Vehicle	No. of One-Way Trips/Day	Trip Length (miles)
Delivery Truck[e]	20	0.1
Water Truck[f]	3	6.4

Five Acre Site - Architectural Coating and Asphalt Paving

Incremental Increase in Onsite Combustion Emissions from Construction Equipment

Equation: Emission Factor (lb/BHP-hr) x No. of Equipment x Work Day (hr/day) x Equipment rating (hp) x Load Factor (%/100) = Onsite Construction Emissions (lb/day)

Equipment Type	**CO2** lb/day
Pavers	1,757
Rollers	3,513
Paving Equipment	3,513
Cement and Mortar Mixers	1,757
Tractors/Loaders/Backhoes	3,513
Total	**14,053**

Incremental Increase in Onsite Combustion Emissions from Onroad Mobile Vehicles

Equation: Emission Factor (lb/mile) x No. of One-Way Trips/Day x 2 x Trip length (mile) = Mobile Emissions (lb/day)

Vehicle	**CO2** lb/day
Delivery Truck	13
Water Truck	121
Total	**133**

Total Incremental Combustion Emissions from Construction Activities

Sources	**CO2** lb/day
On-Site Emissions	**14,186**
Significance Threshold[g]	
Exceed Significance?	

APPENDIX B

URBEMIS 2007 MODEL PRINTOUTS

7/10/2008 3:47:56 PM

Urbemis 2007 Version 9.2.4

Combined Summer Emissions Reports (Pounds/Day)

File Name: C:\Documents and Settings\Keithl\Application Data\Urbemis\Version9a\Projects\CofW 2009 Sat.urb924

Project Name: Church of the Woods Saturday 2009

Project Location: South Coast AQMD

On-Road Vehicle Emissions Based on: Version : Emfac2007 V2.3 Nov 1 2006

Off-Road Vehicle Emissions Based on: OFFROAD2007

Summary Report:

AREA SOURCE EMISSION ESTIMATES

	ROG	NOx	CO	SO2	PM10	PM2.5	CO2
TOTALS (lbs/day, unmitigated)	0.13	0.02	1.60	0.00	0.00	0.00	2.75

OPERATIONAL (VEHICLE) EMISSION ESTIMATES

	ROG	NOx	CO	SO2	PM10	PM2.5	CO2
TOTALS (lbs/day, unmitigated)	0.44	0.65	5.62	0.01	0.89	0.17	530.11

SUM OF AREA SOURCE AND OPERATIONAL EMISSION ESTIMATES

	ROG	NOx	CO	SO2	PM10	PM2.5	CO2
TOTALS (lbs/day, unmitigated)	0.57	0.67	7.22	0.01	0.89	0.17	532.86

7/10/2008 3:47:56 PM

Area Source Unmitigated Detail Report:

AREA SOURCE EMISSION ESTIMATES Summer Pounds Per Day, Unmitigated

Source	ROG	NOx	CO	SO2	PM10	PM2.5	CO2
Natural Gas	0.00	0.00	0.00	0.00	0.00	0.00	0.00
Hearth							
Landscape	0.13	0.02	1.60	0.00	0.00	0.00	2.75
Consumer Products	0.00						
Architectural Coatings	0.00						
TOTALS (lbs/day, unmitigated)	0.13	0.02	1.60	0.00	0.00	0.00	2.75

Area Source Changes to Defaults

Operational Unmitigated Detail Report:

OPERATIONAL EMISSION ESTIMATES Summer Pounds Per Day, Unmitigated

Source	ROG	NOX	CO	SO2	PM10	PM25	CO2
Soccer Complex	0.44	0.65	5.62	0.01	0.89	0.17	530.11
TOTALS (lbs/day, unmitigated)	0.44	0.65	5.62	0.01	0.89	0.17	530.11

Operational Settings:

Does not include correction for passby trips

Does not include double counting adjustment for internal trips

Analysis Year: 2009 Temperature (F): 80 Season: Summer

Emfac: Version : Emfac2007 V2.3 Nov 1 2006

7/10/2008 3:47:56 PM

Summary of Land Uses

Land Use Type	Acreage	Trip Rate	Unit Type	No. Units	Total Trips	Total VMT
Soccer Complex		28.73	unknown	2.00	57.46	515.59
					57.46	515.59

Vehicle Fleet Mix

Vehicle Type	Percent Type	Non-Catalyst	Catalyst	Diesel
Light Auto	51.6	1.4	98.2	0.4
Light Truck < 3750 lbs	7.4	2.7	93.2	4.1
Light Truck 3751-5750 lbs	22.9	0.4	99.6	0.0
Med Truck 5751-8500 lbs	10.6	0.9	99.1	0.0
Lite-Heavy Truck 8501-10,000 lbs	1.6	0.0	81.2	18.8
Lite-Heavy Truck 10,001-14,000 lbs	0.5	0.0	60.0	40.0
Med-Heavy Truck 14,001-33,000 lbs	0.9	0.0	22.2	77.8
Heavy-Heavy Truck 33,001-60,000 lbs	0.5	0.0	0.0	100.0
Other Bus	0.1	0.0	0.0	100.0
Urban Bus	0.1	0.0	0.0	100.0
Motorcycle	2.8	71.4	28.6	0.0
School Bus	0.1	0.0	0.0	100.0
Motor Home	0.9	0.0	88.9	11.1

Travel Conditions

	Residential			Commercial		
	Home-Work	Home-Shop	Home-Other	Commute	Non-Work	Customer
Urban Trip Length (miles)	12.7	7.0	9.5	13.3	7.4	8.9

7/10/2008 3:47:56 PM

Travel Conditions

	Residential			Commercial		
	Home-Work	Home-Shop	Home-Other	Commute	Non-Work	Customer
Rural Trip Length (miles)	17.6	12.1	14.9	15.4	9.6	12.6
Trip speeds (mph)	30.0	30.0	30.0	30.0	30.0	30.0
% of Trips - Residential	32.9	18.0	49.1			
% of Trips - Commercial (by land use)						
Soccer Complex				2.0	1.0	97.0

7/10/2008 3:48:13 PM

Urbemis 2007 Version 9.2.4

Combined Winter Emissions Reports (Pounds/Day)

File Name: C:\Documents and Settings\Keithl\Application Data\Urbemis\Version9a\Projects\CofW 2009 Sat.urb924

Project Name: Church of the Woods Saturday 2009

Project Location: South Coast AQMD

On-Road Vehicle Emissions Based on: Version : Emfac2007 V2.3 Nov 1 2006

Off-Road Vehicle Emissions Based on: OFFROAD2007

Summary Report:

AREA SOURCE EMISSION ESTIMATES

	ROG	NOx	CO	SO2	PM10	PM2.5	CO2
TOTALS (lbs/day, unmitigated)	0.00	0.00	0.00	0.00	0.00	0.00	0.00

OPERATIONAL (VEHICLE) EMISSION ESTIMATES

	ROG	NOx	CO	SO2	PM10	PM2.5	CO2
TOTALS (lbs/day, unmitigated)	0.50	0.78	5.43	0.00	0.89	0.17	480.28

SUM OF AREA SOURCE AND OPERATIONAL EMISSION ESTIMATES

	ROG	NOx	CO	SO2	PM10	PM2.5	CO2
TOTALS (lbs/day, unmitigated)	0.50	0.78	5.43	0.00	0.89	0.17	480.28

7/10/2008 3:48:13 PM

Area Source Unmitigated Detail Report:

AREA SOURCE EMISSION ESTIMATES Winter Pounds Per Day, Unmitigated

Source	ROG	NOx	CO	SO2	PM10	PM2.5	CO2
Natural Gas	0.00	0.00	0.00	0.00	0.00	0.00	0.00
Hearth							
Landscaping - No Winter Emissions							
Consumer Products	0.00						
Architectural Coatings	0.00						
TOTALS (lbs/day, unmitigated)	0.00	0.00	0.00	0.00	0.00	0.00	0.00

Area Source Changes to Defaults

Operational Unmitigated Detail Report:

OPERATIONAL EMISSION ESTIMATES Winter Pounds Per Day, Unmitigated

Source	ROG	NOX	CO	SO2	PM10	PM25	CO2
Soccer Complex	0.50	0.78	5.43	0.00	0.89	0.17	480.28
TOTALS (lbs/day, unmitigated)	0.50	0.78	5.43	0.00	0.89	0.17	480.28

Operational Settings:

Does not include correction for passby trips

Does not include double counting adjustment for internal trips

Analysis Year: 2009 Temperature (F): 60 Season: Winter

Emfac: Version : Emfac2007 V2.3 Nov 1 2006

7/10/2008 3:48:13 PM

Summary of Land Uses

Land Use Type	Acreage	Trip Rate	Unit Type	No. Units	Total Trips	Total VMT
Soccer Complex		28.73	unknown	2.00	57.46	515.59
					57.46	515.59

Vehicle Fleet Mix

Vehicle Type	Percent Type	Non-Catalyst	Catalyst	Diesel
Light Auto	51.6	1.4	98.2	0.4
Light Truck < 3750 lbs	7.4	2.7	93.2	4.1
Light Truck 3751-5750 lbs	22.9	0.4	99.6	0.0
Med Truck 5751-8500 lbs	10.6	0.9	99.1	0.0
Lite-Heavy Truck 8501-10,000 lbs	1.6	0.0	81.2	18.8
Lite-Heavy Truck 10,001-14,000 lbs	0.5	0.0	60.0	40.0
Med-Heavy Truck 14,001-33,000 lbs	0.9	0.0	22.2	77.8
Heavy-Heavy Truck 33,001-60,000 lbs	0.5	0.0	0.0	100.0
Other Bus	0.1	0.0	0.0	100.0
Urban Bus	0.1	0.0	0.0	100.0
Motorcycle	2.8	71.4	28.6	0.0
School Bus	0.1	0.0	0.0	100.0
Motor Home	0.9	0.0	88.9	11.1

Travel Conditions

	Residential			Commercial		
	Home-Work	Home-Shop	Home-Other	Commute	Non-Work	Customer
Urban Trip Length (miles)	12.7	7.0	9.5	13.3	7.4	8.9

7/10/2008 3:48:13 PM

Travel Conditions

	Residential			Commercial		
	Home-Work	Home-Shop	Home-Other	Commute	Non-Work	Customer
Rural Trip Length (miles)	17.6	12.1	14.9	15.4	9.6	12.6
Trip speeds (mph)	30.0	30.0	30.0	30.0	30.0	30.0
% of Trips - Residential	32.9	18.0	49.1			
% of Trips - Commercial (by land use)						
Soccer Complex				2.0	1.0	97.0

7/10/2008 3:48:52 PM

Urbemis 2007 Version 9.2.4

Combined Summer Emissions Reports (Pounds/Day)

File Name: C:\Documents and Settings\KeithI\Application Data\Urbemis\Version9a\Projects\CofW 2009 Sun.urb924

Project Name: Church of the Woods 2009 Sunday

Project Location: South Coast AQMD

On-Road Vehicle Emissions Based on: Version : Emfac2007 V2.3 Nov 1 2006

Off-Road Vehicle Emissions Based on: OFFROAD2007

Summary Report:

AREA SOURCE EMISSION ESTIMATES

	ROG	NOx	CO	SO2	PM10	PM2.5	CO2
TOTALS (lbs/day, unmitigated)	0.37	0.37	1.90	0.00	0.00	0.00	428.12

OPERATIONAL (VEHICLE) EMISSION ESTIMATES

	ROG	NOx	CO	SO2	PM10	PM2.5	CO2
TOTALS (lbs/day, unmitigated)	2.75	3.78	32.80	0.03	5.20	1.02	3,094.93

SUM OF AREA SOURCE AND OPERATIONAL EMISSION ESTIMATES

	ROG	NOx	CO	SO2	PM10	PM2.5	CO2
TOTALS (lbs/day, unmitigated)	3.12	4.15	34.70	0.03	5.20	1.02	3,523.05

7/10/2008 3:48:52 PM

Area Source Unmitigated Detail Report:

AREA SOURCE EMISSION ESTIMATES Summer Pounds Per Day, Unmitigated

Source	ROG	NOx	CO	SO2	PM10	PM2.5	CO2
Natural Gas	0.03	0.35	0.30	0.00	0.00	0.00	425.37
Hearth - No Summer Emissions							
Landscape	0.13	0.02	1.60	0.00	0.00	0.00	2.75
Consumer Products	0.00						
Architectural Coatings	0.21						
TOTALS (lbs/day, unmitigated)	0.37	0.37	1.90	0.00	0.00	0.00	428.12

Area Source Changes to Defaults

Operational Unmitigated Detail Report:

OPERATIONAL EMISSION ESTIMATES Summer Pounds Per Day, Unmitigated

Source	ROG	NOX	CO	SO2	PM10	PM25	CO2
Place of worship	2.75	3.78	32.80	0.03	5.20	1.02	3,094.93
TOTALS (lbs/day, unmitigated)	2.75	3.78	32.80	0.03	5.20	1.02	3,094.93

Operational Settings:

Does not include correction for passby trips

Does not include double counting adjustment for internal trips

Analysis Year: 2009 Temperature (F): 80 Season: Summer

Emfac: Version : Emfac2007 V2.3 Nov 1 2006

7/10/2008 3:48:52 PM

Summary of Land Uses

Land Use Type	Acreage	Trip Rate	Unit Type	No. Units	Total Trips	Total VMT
Place of worship		9.11	1000 sq ft	36.67	334.06	3,009.75
					334.06	3,009.75

Vehicle Fleet Mix

Vehicle Type	Percent Type	Non-Catalyst	Catalyst	Diesel
Light Auto	51.6	1.4	98.2	0.4
Light Truck < 3750 lbs	7.4	2.7	93.2	4.1
Light Truck 3751-5750 lbs	22.9	0.4	99.6	0.0
Med Truck 5751-8500 lbs	10.6	0.9	99.1	0.0
Lite-Heavy Truck 8501-10,000 lbs	1.6	0.0	81.2	18.8
Lite-Heavy Truck 10,001-14,000 lbs	0.5	0.0	60.0	40.0
Med-Heavy Truck 14,001-33,000 lbs	0.9	0.0	22.2	77.8
Heavy-Heavy Truck 33,001-60,000 lbs	0.5	0.0	0.0	100.0
Other Bus	0.1	0.0	0.0	100.0
Urban Bus	0.1	0.0	0.0	100.0
Motorcycle	2.8	71.4	28.6	0.0
School Bus	0.1	0.0	0.0	100.0
Motor Home	0.9	0.0	88.9	11.1

Travel Conditions

	Residential			Commercial		
	Home-Work	Home-Shop	Home-Other	Commute	Non-Work	Customer
Urban Trip Length (miles)	12.7	7.0	9.5	13.3	7.4	8.9

7/10/2008 3:48:52 PM

Travel Conditions

	Residential			Commercial		
	Home-Work	Home-Shop	Home-Other	Commute	Non-Work	Customer
Rural Trip Length (miles)	17.6	12.1	14.9	15.4	9.6	12.6
Trip speeds (mph)	30.0	30.0	30.0	30.0	30.0	30.0
% of Trips - Residential	32.9	18.0	49.1			
% of Trips - Commercial (by land use)						
Place of worship				3.0	1.5	95.5

7/10/2008 3:49:07 PM

Area Source Unmitigated Detail Report:

AREA SOURCE EMISSION ESTIMATES Winter Pounds Per Day, Unmitigated

Source	ROG	NOx	CO	SO2	PM10	PM2.5	CO2
Natural Gas	0.03	0.35	0.30	0.00	0.00	0.00	425.37
Hearth	0.00	0.00	0.00	0.00	0.00	0.00	0.00
Landscaping - No Winter Emissions							
Consumer Products	0.00						
Architectural Coatings	0.21						
TOTALS (lbs/day, unmitigated)	0.24	0.35	0.30	0.00	0.00	0.00	425.37

Area Source Changes to Defaults

Operational Unmitigated Detail Report:

OPERATIONAL EMISSION ESTIMATES Winter Pounds Per Day, Unmitigated

Source	ROG	NOX	CO	SO2	PM10	PM25	CO2
Place of worship	2.98	4.56	31.69	0.03	5.20	1.02	2,804.05
TOTALS (lbs/day, unmitigated)	2.98	4.56	31.69	0.03	5.20	1.02	2,804.05

Operational Settings:

Does not include correction for passby trips

Does not include double counting adjustment for internal trips

Analysis Year: 2009 Temperature (F): 60 Season: Winter

Emfac: Version : Emfac2007 V2.3 Nov 1 2006

7/10/2008 3:49:07 PM

Summary of Land Uses

Land Use Type	Acreage	Trip Rate	Unit Type	No. Units	Total Trips	Total VMT
Place of worship		9.11	1000 sq ft	36.67	334.06	3,009.75
					334.06	3,009.75

Vehicle Fleet Mix

Vehicle Type	Percent Type	Non-Catalyst	Catalyst	Diesel
Light Auto	51.6	1.4	98.2	0.4
Light Truck < 3750 lbs	7.4	2.7	93.2	4.1
Light Truck 3751-5750 lbs	22.9	0.4	99.6	0.0
Med Truck 5751-8500 lbs	10.6	0.9	99.1	0.0
Lite-Heavy Truck 8501-10,000 lbs	1.6	0.0	81.2	18.8
Lite-Heavy Truck 10,001-14,000 lbs	0.5	0.0	60.0	40.0
Med-Heavy Truck 14,001-33,000 lbs	0.9	0.0	22.2	77.8
Heavy-Heavy Truck 33,001-60,000 lbs	0.5	0.0	0.0	100.0
Other Bus	0.1	0.0	0.0	100.0
Urban Bus	0.1	0.0	0.0	100.0
Motorcycle	2.8	71.4	28.6	0.0
School Bus	0.1	0.0	0.0	100.0
Motor Home	0.9	0.0	88.9	11.1

Travel Conditions

	Residential			Commercial		
	Home-Work	Home-Shop	Home-Other	Commute	Non-Work	Customer
Urban Trip Length (miles)	12.7	7.0	9.5	13.3	7.4	8.9

7/10/2008 3:49:07 PM

Travel Conditions

	Residential			Commercial		
	Home-Work	Home-Shop	Home-Other	Commute	Non-Work	Customer
Rural Trip Length (miles)	17.6	12.1	14.9	15.4	9.6	12.6
Trip speeds (mph)	30.0	30.0	30.0	30.0	30.0	30.0
% of Trips - Residential	32.9	18.0	49.1			
% of Trips - Commercial (by land use)						
Place of worship				3.0	1.5	95.5

7/10/2008 3:49:42 PM

Urbemis 2007 Version 9.2.4

Combined Summer Emissions Reports (Pounds/Day)

File Name: C:\Documents and Settings\Keithl\Application Data\Urbemis\Version9a\Projects\CofW 2013 Sat.urb924

Project Name: Church of the Woods Saturday 2013

Project Location: South Coast AQMD

On-Road Vehicle Emissions Based on: Version : Emfac2007 V2.3 Nov 1 2006

Off-Road Vehicle Emissions Based on: OFFROAD2007

Summary Report:

AREA SOURCE EMISSION ESTIMATES

	ROG	NOx	CO	SO2	PM10	PM2.5	CO2
TOTALS (lbs/day, unmitigated)	0.12	0.02	1.55	0.00	0.01	0.01	2.81

OPERATIONAL (VEHICLE) EMISSION ESTIMATES

	ROG	NOx	CO	SO2	PM10	PM2.5	CO2
TOTALS (lbs/day, unmitigated)	0.32	0.47	4.12	0.01	0.89	0.17	531.05

SUM OF AREA SOURCE AND OPERATIONAL EMISSION ESTIMATES

	ROG	NOx	CO	SO2	PM10	PM2.5	CO2
TOTALS (lbs/day, unmitigated)	0.44	0.49	5.67	0.01	0.90	0.18	533.86

7/10/2008 3:49:43 PM

Area Source Unmitigated Detail Report:

AREA SOURCE EMISSION ESTIMATES Summer Pounds Per Day, Unmitigated

Source	ROG	NOx	CO	SO2	PM10	PM2.5	CO2
Natural Gas	0.00	0.00	0.00	0.00	0.00	0.00	0.00
Hearth							
Landscape	0.12	0.02	1.55	0.00	0.01	0.01	2.81
Consumer Products	0.00						
Architectural Coatings	0.00						
TOTALS (lbs/day, unmitigated)	0.12	0.02	1.55	0.00	0.01	0.01	2.81

Area Source Changes to Defaults

Operational Unmitigated Detail Report:

OPERATIONAL EMISSION ESTIMATES Summer Pounds Per Day, Unmitigated

Source	ROG	NOX	CO	SO2	PM10	PM25	CO2
Soccer Complex	0.32	0.47	4.12	0.01	0.89	0.17	531.05
TOTALS (lbs/day, unmitigated)	0.32	0.47	4.12	0.01	0.89	0.17	531.05

Operational Settings:

Does not include correction for passby trips

Does not include double counting adjustment for internal trips

Analysis Year: 2013 Temperature (F): 80 Season: Summer

Emfac: Version : Emfac2007 V2.3 Nov 1 2006

7/10/2008 3:49:43 PM

Summary of Land Uses

Land Use Type	Acreage	Trip Rate	Unit Type	No. Units	Total Trips	Total VMT
Soccer Complex		28.73	unknown	2.00	57.46	515.59
					57.46	515.59

Vehicle Fleet Mix

Vehicle Type	Percent Type	Non-Catalyst	Catalyst	Diesel
Light Auto	51.3	0.4	99.4	0.2
Light Truck < 3750 lbs	7.3	1.4	95.9	2.7
Light Truck 3751-5750 lbs	23.1	0.4	99.6	0.0
Med Truck 5751-8500 lbs	10.7	0.9	99.1	0.0
Lite-Heavy Truck 8501-10,000 lbs	1.6	0.0	81.2	18.8
Lite-Heavy Truck 10,001-14,000 lbs	0.5	0.0	60.0	40.0
Med-Heavy Truck 14,001-33,000 lbs	0.9	0.0	22.2	77.8
Heavy-Heavy Truck 33,001-60,000 lbs	0.6	0.0	0.0	100.0
Other Bus	0.1	0.0	0.0	100.0
Urban Bus	0.1	0.0	0.0	100.0
Motorcycle	2.8	53.6	46.4	0.0
School Bus	0.1	0.0	0.0	100.0
Motor Home	0.9	0.0	88.9	11.1

Travel Conditions

	Residential			Commercial		
	Home-Work	Home-Shop	Home-Other	Commute	Non-Work	Customer
Urban Trip Length (miles)	12.7	7.0	9.5	13.3	7.4	8.9

7/10/2008 3:49:43 PM

Travel Conditions

	Residential			Commercial		
	Home-Work	Home-Shop	Home-Other	Commute	Non-Work	Customer
Rural Trip Length (miles)	17.6	12.1	14.9	15.4	9.6	12.6
Trip speeds (mph)	30.0	30.0	30.0	30.0	30.0	30.0
% of Trips - Residential	32.9	18.0	49.1			
% of Trips - Commercial (by land use)						
Soccer Complex				2.0	1.0	97.0

7/10/2008 3:50:00 PM

Urbemis 2007 Version 9.2.4

Combined Winter Emissions Reports (Pounds/Day)

File Name: C:\Documents and Settings\KeithI\Application Data\Urbemis\Version9a\Projects\CofW 2013 Sat.urb924

Project Name: Church of the Woods Saturday 2013

Project Location: South Coast AQMD

On-Road Vehicle Emissions Based on: Version : Emfac2007 V2.3 Nov 1 2006

Off-Road Vehicle Emissions Based on: OFFROAD2007

Summary Report:

AREA SOURCE EMISSION ESTIMATES

	ROG	NOx	CO	SO2	PM10	PM2.5	CO2
TOTALS (lbs/day, unmitigated)	0.00	0.00	0.00	0.00	0.00	0.00	0.00

OPERATIONAL (VEHICLE) EMISSION ESTIMATES

	ROG	NOx	CO	SO2	PM10	PM2.5	CO2
TOTALS (lbs/day, unmitigated)	0.35	0.57	3.95	0.00	0.89	0.17	480.60

SUM OF AREA SOURCE AND OPERATIONAL EMISSION ESTIMATES

	ROG	NOx	CO	SO2	PM10	PM2.5	CO2
TOTALS (lbs/day, unmitigated)	0.35	0.57	3.95	0.00	0.89	0.17	480.60

7/10/2008 3:50:00 PM

Area Source Unmitigated Detail Report:

AREA SOURCE EMISSION ESTIMATES Winter Pounds Per Day, Unmitigated

Source	ROG	NOx	CO	SO2	PM10	PM2.5	CO2
Natural Gas	0.00	0.00	0.00	0.00	0.00	0.00	0.00
Hearth							
Landscaping - No Winter Emissions							
Consumer Products	0.00						
Architectural Coatings	0.00						
TOTALS (lbs/day, unmitigated)	0.00	0.00	0.00	0.00	0.00	0.00	0.00

Area Source Changes to Defaults

Operational Unmitigated Detail Report:

OPERATIONAL EMISSION ESTIMATES Winter Pounds Per Day, Unmitigated

Source	ROG	NOX	CO	SO2	PM10	PM25	CO2
Soccer Complex	0.35	0.57	3.95	0.00	0.89	0.17	480.60
TOTALS (lbs/day, unmitigated)	0.35	0.57	3.95	0.00	0.89	0.17	480.60

Operational Settings:

Does not include correction for passby trips

Does not include double counting adjustment for internal trips

Analysis Year: 2013 Temperature (F): 60 Season: Winter

Emfac: Version : Emfac2007 V2.3 Nov 1 2006

7/10/2008 3:50:00 PM

Summary of Land Uses

Land Use Type	Acreage	Trip Rate	Unit Type	No. Units	Total Trips	Total VMT
Soccer Complex		28.73	unknown	2.00	57.46	515.59
					57.46	515.59

Vehicle Fleet Mix

Vehicle Type	Percent Type	Non-Catalyst	Catalyst	Diesel
Light Auto	51.3	0.4	99.4	0.2
Light Truck < 3750 lbs	7.3	1.4	95.9	2.7
Light Truck 3751-5750 lbs	23.1	0.4	99.6	0.0
Med Truck 5751-8500 lbs	10.7	0.9	99.1	0.0
Lite-Heavy Truck 8501-10,000 lbs	1.6	0.0	81.2	18.8
Lite-Heavy Truck 10,001-14,000 lbs	0.5	0.0	60.0	40.0
Med-Heavy Truck 14,001-33,000 lbs	0.9	0.0	22.2	77.8
Heavy-Heavy Truck 33,001-60,000 lbs	0.6	0.0	0.0	100.0
Other Bus	0.1	0.0	0.0	100.0
Urban Bus	0.1	0.0	0.0	100.0
Motorcycle	2.8	53.6	46.4	0.0
School Bus	0.1	0.0	0.0	100.0
Motor Home	0.9	0.0	88.9	11.1

Travel Conditions

	Residential			Commercial		
	Home-Work	Home-Shop	Home-Other	Commute	Non-Work	Customer
Urban Trip Length (miles)	12.7	7.0	9.5	13.3	7.4	8.9

7/10/2008 3:50:00 PM

Travel Conditions

	Residential			Commercial		
	Home-Work	Home-Shop	Home-Other	Commute	Non-Work	Customer
Rural Trip Length (miles)	17.6	12.1	14.9	15.4	9.6	12.6
Trip speeds (mph)	30.0	30.0	30.0	30.0	30.0	30.0
% of Trips - Residential	32.9	18.0	49.1			
% of Trips - Commercial (by land use)						
Soccer Complex				2.0	1.0	97.0

7/10/2008 3:50:42 PM

Urbemis 2007 Version 9.2.4

Combined Summer Emissions Reports (Pounds/Day)

File Name: C:\Documents and Settings\Keithl\Application Data\Urbemis\Version9a\Projects\CofW 2013 Sun.urb924

Project Name: Church of the Woods 2013 Sunday

Project Location: South Coast AQMD

On-Road Vehicle Emissions Based on: Version : Emfac2007 V2.3 Nov 1 2006

Off-Road Vehicle Emissions Based on: OFFROAD2007

Summary Report:

AREA SOURCE EMISSION ESTIMATES

	ROG	NOx	CO	SO2	PM10	PM2.5	CO2
TOTALS (lbs/day, unmitigated)	0.69	0.87	2.26	0.00	0.01	0.01	1,021.52

OPERATIONAL (VEHICLE) EMISSION ESTIMATES

	ROG	NOx	CO	SO2	PM10	PM2.5	CO2
TOTALS (lbs/day, unmitigated)	4.81	6.58	57.62	0.08	12.45	2.42	7,425.19

SUM OF AREA SOURCE AND OPERATIONAL EMISSION ESTIMATES

	ROG	NOx	CO	SO2	PM10	PM2.5	CO2
TOTALS (lbs/day, unmitigated)	5.50	7.45	59.88	0.08	12.46	2.43	8,446.71

7/10/2008 3:50:42 PM

Area Source Unmitigated Detail Report:

AREA SOURCE EMISSION ESTIMATES Summer Pounds Per Day, Unmitigated

Source	ROG	NOx	CO	SO2	PM10	PM2.5	CO2
Natural Gas	0.06	0.85	0.71	0.00	0.00	0.00	1,018.71
Hearth - No Summer Emissions							
Landscape	0.12	0.02	1.55	0.00	0.01	0.01	2.81
Consumer Products	0.00						
Architectural Coatings	0.51						
TOTALS (lbs/day, unmitigated)	0.69	0.87	2.26	0.00	0.01	0.01	1,021.52

Area Source Changes to Defaults

Operational Unmitigated Detail Report:

OPERATIONAL EMISSION ESTIMATES Summer Pounds Per Day, Unmitigated

Source	ROG	NOX	CO	SO2	PM10	PM25	CO2
Place of worship	4.81	6.58	57.62	0.08	12.45	2.42	7,425.19
TOTALS (lbs/day, unmitigated)	4.81	6.58	57.62	0.08	12.45	2.42	7,425.19

Operational Settings:

Does not include correction for passby trips

Does not include double counting adjustment for internal trips

Analysis Year: 2013 Temperature (F): 80 Season: Summer

Emfac: Version : Emfac2007 V2.3 Nov 1 2006

7/10/2008 3:50:42 PM

Summary of Land Uses

Land Use Type	Acreage	Trip Rate	Unit Type	No. Units	Total Trips	Total VMT
Place of worship		9.11	1000 sq ft	87.82	800.04	7,207.96
					800.04	7,207.96

Vehicle Fleet Mix

Vehicle Type	Percent Type	Non-Catalyst	Catalyst	Diesel
Light Auto	51.3	0.4	99.4	0.2
Light Truck < 3750 lbs	7.3	1.4	95.9	2.7
Light Truck 3751-5750 lbs	23.1	0.4	99.6	0.0
Med Truck 5751-8500 lbs	10.7	0.9	99.1	0.0
Lite-Heavy Truck 8501-10,000 lbs	1.6	0.0	81.2	18.8
Lite-Heavy Truck 10,001-14,000 lbs	0.5	0.0	60.0	40.0
Med-Heavy Truck 14,001-33,000 lbs	0.9	0.0	22.2	77.8
Heavy-Heavy Truck 33,001-60,000 lbs	0.6	0.0	0.0	100.0
Other Bus	0.1	0.0	0.0	100.0
Urban Bus	0.1	0.0	0.0	100.0
Motorcycle	2.8	53.6	46.4	0.0
School Bus	0.1	0.0	0.0	100.0
Motor Home	0.9	0.0	88.9	11.1

Travel Conditions

	Residential			Commercial		
	Home-Work	Home-Shop	Home-Other	Commute	Non-Work	Customer
Urban Trip Length (miles)	12.7	7.0	9.5	13.3	7.4	8.9

7/10/2008 3:50:42 PM

Travel Conditions

	Residential			Commercial		
	Home-Work	Home-Shop	Home-Other	Commute	Non-Work	Customer
Rural Trip Length (miles)	17.6	12.1	14.9	15.4	9.6	12.6
Trip speeds (mph)	30.0	30.0	30.0	30.0	30.0	30.0
% of Trips - Residential	32.9	18.0	49.1			
% of Trips - Commercial (by land use)						
Place of worship				3.0	1.5	95.5

7/10/2008 3:50:57 PM

Urbemis 2007 Version 9.2.4

Combined Winter Emissions Reports (Pounds/Day)

File Name: C:\Documents and Settings\Keithl\Application Data\Urbemis\Version9a\Projects\CofW 2013 Sun.urb924

Project Name: Church of the Woods 2013 Sunday

Project Location: South Coast AQMD

On-Road Vehicle Emissions Based on: Version : Emfac2007 V2.3 Nov 1 2006

Off-Road Vehicle Emissions Based on: OFFROAD2007

Summary Report:

AREA SOURCE EMISSION ESTIMATES

	ROG	NOx	CO	SO2	PM10	PM2.5	CO2
TOTALS (lbs/day, unmitigated)	0.57	0.85	0.71	0.00	0.00	0.00	1,018.71

OPERATIONAL (VEHICLE) EMISSION ESTIMATES

	ROG	NOx	CO	SO2	PM10	PM2.5	CO2
TOTALS (lbs/day, unmitigated)	5.12	7.91	55.19	0.06	12.45	2.42	6,719.94

SUM OF AREA SOURCE AND OPERATIONAL EMISSION ESTIMATES

	ROG	NOx	CO	SO2	PM10	PM2.5	CO2
TOTALS (lbs/day, unmitigated)	5.69	8.76	55.90	0.06	12.45	2.42	7,738.65

7/10/2008 3:50:57 PM

Area Source Unmitigated Detail Report:

AREA SOURCE EMISSION ESTIMATES Winter Pounds Per Day, Unmitigated

Source	ROG	NOx	CO	SO2	PM10	PM2.5	CO2
Natural Gas	0.06	0.85	0.71	0.00	0.00	0.00	1,018.71
Hearth	0.00	0.00	0.00	0.00	0.00	0.00	0.00
Landscaping - No Winter Emissions							
Consumer Products	0.00						
Architectural Coatings	0.51						
TOTALS (lbs/day, unmitigated)	0.57	0.85	0.71	0.00	0.00	0.00	1,018.71

Area Source Changes to Defaults

Operational Unmitigated Detail Report:

OPERATIONAL EMISSION ESTIMATES Winter Pounds Per Day, Unmitigated

Source	ROG	NOX	CO	SO2	PM10	PM25	CO2
Place of worship	5.12	7.91	55.19	0.06	12.45	2.42	6,719.94
TOTALS (lbs/day, unmitigated)	5.12	7.91	55.19	0.06	12.45	2.42	6,719.94

Operational Settings:

Does not include correction for passby trips

Does not include double counting adjustment for internal trips

Analysis Year: 2013 Temperature (F): 60 Season: Winter

Emfac: Version : Emfac2007 V2.3 Nov 1 2006

7/10/2008 3:50:57 PM

Summary of Land Uses

Land Use Type	Acreage	Trip Rate	Unit Type	No. Units	Total Trips	Total VMT
Place of worship		9.11	1000 sq ft	87.82	800.04	7,207.96
					800.04	7,207.96

Vehicle Fleet Mix

Vehicle Type	Percent Type	Non-Catalyst	Catalyst	Diesel
Light Auto	51.3	0.4	99.4	0.2
Light Truck < 3750 lbs	7.3	1.4	95.9	2.7
Light Truck 3751-5750 lbs	23.1	0.4	99.6	0.0
Med Truck 5751-8500 lbs	10.7	0.9	99.1	0.0
Lite-Heavy Truck 8501-10,000 lbs	1.6	0.0	81.2	18.8
Lite-Heavy Truck 10,001-14,000 lbs	0.5	0.0	60.0	40.0
Med-Heavy Truck 14,001-33,000 lbs	0.9	0.0	22.2	77.8
Heavy-Heavy Truck 33,001-60,000 lbs	0.6	0.0	0.0	100.0
Other Bus	0.1	0.0	0.0	100.0
Urban Bus	0.1	0.0	0.0	100.0
Motorcycle	2.8	53.6	46.4	0.0
School Bus	0.1	0.0	0.0	100.0
Motor Home	0.9	0.0	88.9	11.1

Travel Conditions

	Residential			Commercial		
	Home-Work	Home-Shop	Home-Other	Commute	Non-Work	Customer
Urban Trip Length (miles)	12.7	7.0	9.5	13.3	7.4	8.9

APPENDIX C

GLOBAL WARMING

Greenhouse Gas Emissions Worksheet

Project Parameters	
	2009
Vehicles (trips/day)	800
(MWh/year)	490
(cf/day)	6,600

	Emissions (tons per year)				
Emission Source	CO_2	CH_4	N_2O	CO_2e	
Vehicles	1,100	0.075	0.11	1,100	79%
Electricity Production	150	0.0016	0.00091	150	11%
Natural Gas Combustion	140	0.0028	0.0026	140	10%
Total Annual Emissions	1,400	0.079	0.11	1,400	

Note: Numbers in table may not appear to add up correctly due to rounding of all numbers to two significant digits.

Emission Source	Total CO_2e (Tg per year)
Vehicles	0.001
Electricity Production	0.00014
Natural Gas Combustion	0.00013
Total (CO_2e)	0.0013
% of SCAG 2004 total	0.00074%
% of State 2004 total	0.00026%

1.1025 tons/metric tonne
1,000,000 metric tonne/Tg

Comparison Area GHG Usage			Year of data
SCAG	176.79	Tg/year	2004
State	492	Tg/year	2004

Global warming potentials (GWPs) are used to compare the abilities of different GHGs to trap heat in the atmosphere. GWPs are based on the radiative efficiency (heat-absorbing ability) of each gas relative to that of CO_2, as well as the decay rate of each gas (the amount removed from the atmosphere over a given number of years) relative to that of CO_2. The GWP provides a construct for converting emissions of various gases into a common measure, which allows climate analysts to aggregate the radiative impacts of various GHGs into a uniform measure denominated in carbon or CO_2 equivalents. The generally accepted authority on GWPs is the Intergovernmental Panel on Climate Change (IPCC). In 2001, the IPCC updated its estimates of GWPs for key GHGs. The table below lists the GWPs to calculate carbon dioxide equivalents (CO2e.)

Global Warming Potential

Gas	Atmospheric Lifetime (years)	Global Warming Potential (100 year time horizon)
Carbon Dioxide	50-200	1
Methane	12 ± 3	21
Nitrous Oxide	120	310
HFC-23	264	11700
HFC-134a	14.6	1300
HFC-152a	1.5	140
PFC: Tetrafluoromethane (CF_4)	50000	6500
PFC: Hexafluoromethane (C_2F_6)	10000	9200
Sulfur Hexafluoride (SF_6)	3200	23900

Electricity Emissions Worksheet

Commercial Electricity Usage (2003 data):

Commercial Building Type	Electricity Consumption per Building by Building Type	Electricity Consumption per Square Foot by Building Type	Project Info (either # of bldgs or total sf, not both)		Annual Consumption
	thousand kWH	kWh	# of bldgs	total sf	MWh
All Commercial	202	14.1			
Retail (Other than Mall)	139	14.3			
Education	283	11			
Food Sales	276	49.4			
Food Service	213	38.4			
Health Care (All)	564	22.9			
Inpatient Health	6,628	27.5			
Outpatient Health	168	16.1			
Lodging	483	13.5			
Office	256	17.3			
Other	510	22.5			
Public Assembly	179	12.5			
Public Order and Safety	237	15.3			
Religious Worship	49	4.9		100000	490
Service	73	11			
Vacant	42	2.4			
Warehouse and Storage	154	7.6			

Note: Health Care (All) includes both "Inpatient Health" and "Outpatient Health".

Source: Energy Information Administration, www.eia.doe.gov/emeu/cbecs/cbecs2003/detailed_tables_2003/detailed_tables_2003.html.

Residential Energy Usage (2001 data):

	Mountain	Pacific	Total US.	Project Info # of units
Electricity (kWh)	9,926	7,622	10,656	

Source: Energy Information Administration, Office of Energy Markets and End Use, Forms EIA-457 A-G of the 2001 Residential Energy Consumption Survey.

	CO_2			CH_4	N_2O
Electricity production emission factors for CA	lb/kWh 0.61	short tons/MWh 0.303	tons/MWh 0.275	lb/MWh 0.0067	lb/MWh 0.0037
U.S. Average	1.34	0.668	0.606	0.0111	0.0192

Source: Energy Information Administration, Updated State-and Regional-level Greenhouse Gas Emission Factors for Electricity (March 2002), http://www.eia.doe.gov/pub/oiaf/1605/cdrom/pdf/e-supdoc.pdf. (http://www.eia.doe.gov/oiaf/1605/ee-factors.html accessed 4/14/2008)

Vehicle Emissions Worksheet

avg. speed=	40	(mph)	avg trip length=	10	(miles)
2009		**CO_2**	**CH_4**	**N_2O**	**Fleet %**
LDA	CAT	293.227	0.021	0.032	60.9%
LDA	DSL	360.25	0.006	0.001	0.5%
LDT	CAT	364.335	0.0265	0.042	34.6%
LDT	DSL	349.063	0.004	0.002	0.4%
HDT	CAT	468.108	0.067	0.088	1.8%
HDT	DSL	931.705	0.0126	0.005	1.8%
Composite		333.037	0.023	0.036	100.0%

Notes:

CO_2 and CH_4 from EMFAC2007

N_2O from EPA *Update of Methane and Nitrous Oxide Emission Factors for On-Highway Vehicles*, November 2004, Table 28.

Fleet percentages from URBEMIS2007

	From URBEMIS2007		
	Vehicle Categories	Fleet %	Diesel %
LDA	Light Auto	51.3	0.4
	Light Truck < 3750 lbs	7.3	4.1
LDT	Light Truck 3751-5750 lbs	23.1	0
	Med Truck 5751-8500 lbs	10.7	0
HDT	Lite-Heavy Truck 8501-10,000 lbs	1.6	18.8
	Lite-Heavy Truck 10,001-14,000 lbs	0.5	40
	Med-Heavy Truck 14,001-33,000 lbs	0.9	77.8
	Heavy-Heavy Truck 33,001-60,000 lbs	0.6	100
LDT	Other Bus	0.1	100
	Urban Bus	0.1	100
LDA	Motorcycle	2.8	0
LDT	School Bus	0.1	100
	Motor Home	0.9	11.1
		100	

PCR Santa Monica

233 Wilshire Boulevard
Suite 130
Santa Monica, CA 90401
TEL 310.451.4488
FAX 310.451.5279
PCRinfo@pcrnet.com

PCR Irvine

One Venture
Suite 150
Irvine, CA 92618
TEL 949.753.7001
FAX 949.753.7002
PCRinfo@pcrnet.com

PCR Pasadena

55 South Lake Avenue
Suite 215
Pasadena, CA 91101
TEL 626.204.6170
FAX 626.204.6171
PCRinfo@pcrnet.com