APPENDIX 1.1

Approved Traffic Study Scoping Agreement

Charlene S. Hwang

From: Petre, Ed [epetre@dpw.sbcounty.gov]
Sent: Tuesday, February 28, 2012 7:21 AM
To: Charlene S. Hwang
Subject: RE: County of San Bernardino

Charlene,

Regarding Transportation fees
Here is the website for the Regional Transportation Mitigation Plan:
http://www.sbcounty.gov/dpw/transportation/rdm/rdmprogram.asp
Also, there may be a fair share involved depending on the traffic report.
Additional fees for review of plans and studies.

Thanks
Ed Petre

From: Charlene S. Hwang [mailto:chwang@urbanxroads.com]
Sent: Monday, February 27, 2012 7:21 PM
To: Petre, Ed
Subject: County of San Bernardino

Hi Ed,

I am in the process of writing the report for the University Crossings Apartment project located on Lugonia Avenue within the Donut Hole. I was wondering if you could direct me to someone or somewhere (perhaps your website) to locate information on fees/fee programs that this project may be subject to.

Any help would be much appreciated.

Thank you,
Charlene S. Hwang, P.E.
Senior Transportation Engineer

URBAN CROSSROADS
Improving Urban Places
IRVINE | CARLSBAD | RIVERSIDE
41 Corporate Park, Suite 300
Irvine, CA 92606
ph: (949) 660-1994 x222
www.urbanxroads.com

Charlene S. Hwang

From: Aric Evatt
Sent: Tuesday, February 21, 2012 8:42 AM
To: Charlene S. Hwang
Subject: FW: scan documents
Attachments: Redlands Distribution Facility final.pdf

Here are the projects Ed wants included in the University Crossings analysis… let's cross-reference these with the list from Redlands Walmart to make sure we don't already have one of these projects and maybe we just need to update the land use or site intensity.

Aric Evatt
Principal
Urban Crossroads, Inc.
Irvine, CA 92606
ph: 949.660.1994 x204

From: Petre, Ed [mailto:epetre@dpw.sbcounty.gov]
Sent: Tuesday, February 21, 2012 8:39 AM
To: Aric Evatt
Subject: FW: scan documents

Here you go
Thanks
Ed

From: Rea, Serra
Sent: Tuesday, February 21, 2012 7:33 AM
To: Petre, Ed
Subject: RE: scan documents

Was sure I did, here they are again.

From: Petre, Ed
Sent: Friday, February 17, 2012 8:36 AM
To: Rea, Serra
Subject: scan documents

Serra
Did you send me the documents that I ask to have scanned?
Thanks

Ed Petre
County of San Bernardino - Traffic Division
909-387-8239

KUNZMAN ASSOCIATES, INC.

Final

REDLANDS DISTRIBUTION FACILITY

TRAFFIC IMPACT ANALYSIS

January 4, 2012

Prepared by:

Amy Leung, E.I.T.,
Carl Ballard, and
William Kunzman, P.E.

William Kunzman

REGISTERED PROFESSIONAL ENGINEER
WILLIAM A. KUNZMAN
No. TR0056
TRAFFIC
STATE OF CALIFORNIA

1111 Town & Country Road, Suite 34
Orange, California 92868
(714) 973-8383

www.traffic-engineer.com

4983c

Figure 2
Site Plan

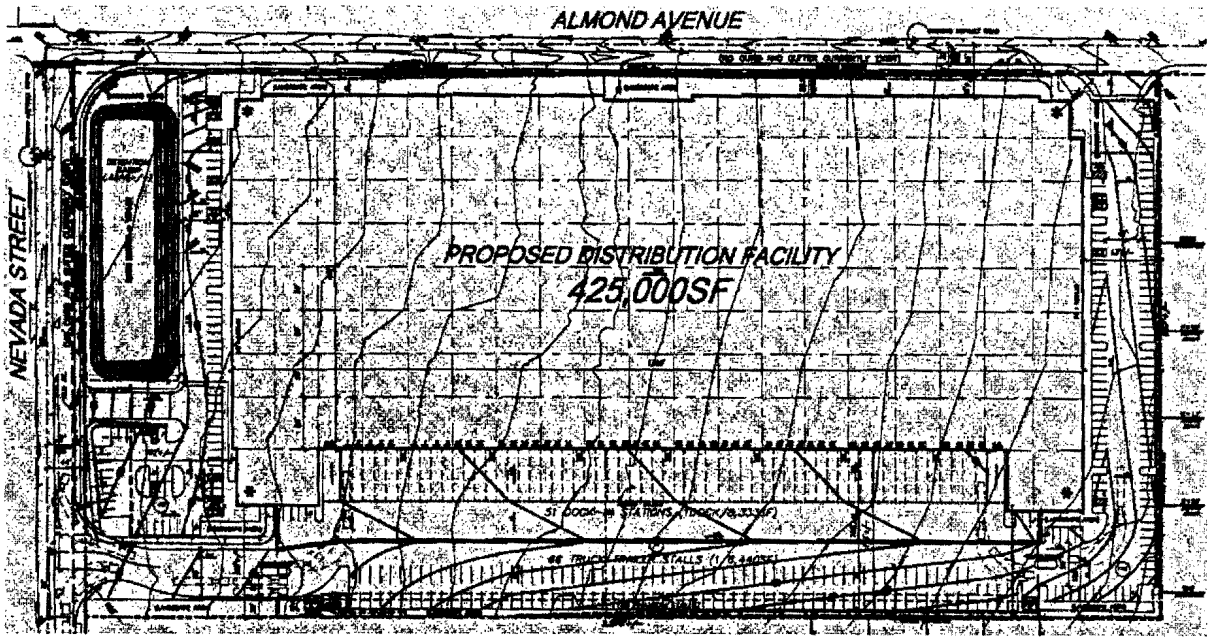

N
NTS

KLINZMAN ASSOCIATES, INC.
OVER 35 YEARS OF EXCELLENT SERVICE

4983c/2

Figure 14
Opening Year (2013) Project
Morning Peak Hour Intersection Turning Movement Volumes

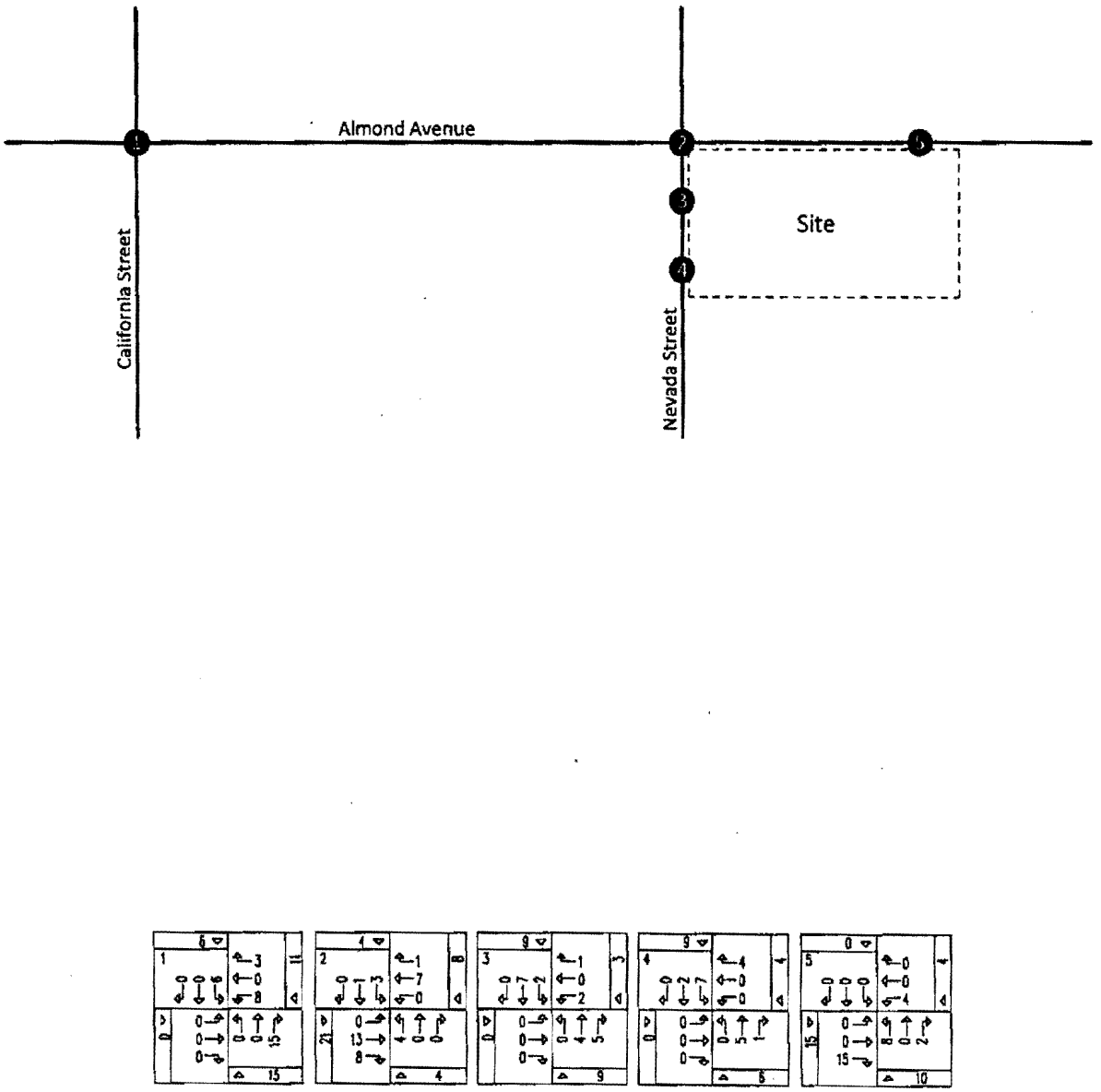

4983c/14

KUNZMAN ASSOCIATES, INC. Intersection reference numbers are in upper left corner of turning movement boxes.

OVER 35 YEARS OF EXCELLENT SERVICE

Figure 15
Opening Year (2013) Project
Evening Peak Hour Intersection Turning Movement Volumes

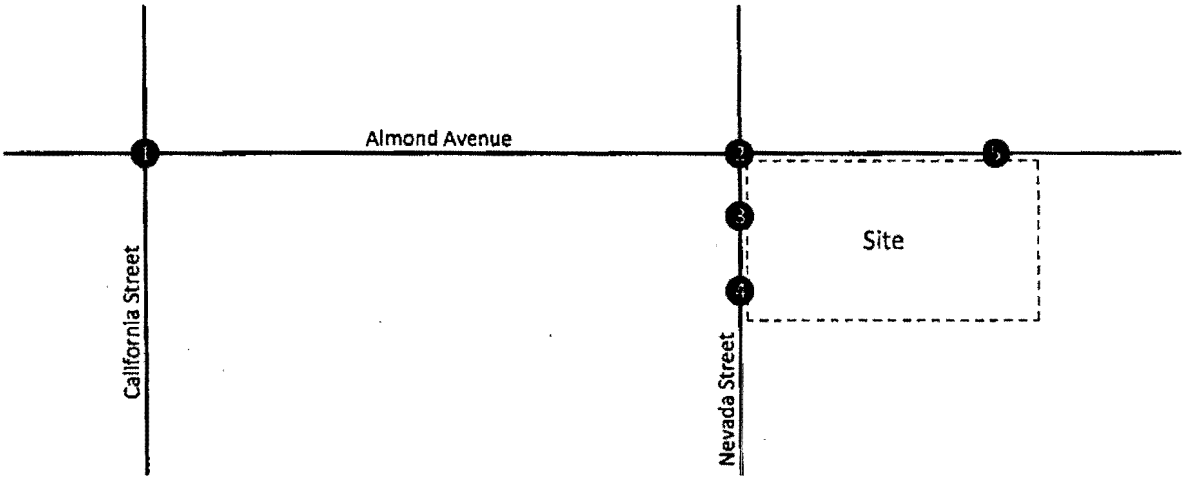

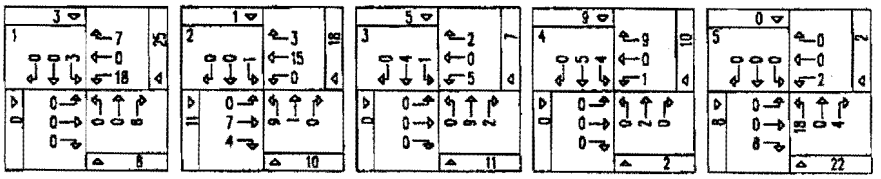

NTS

4983c/15

KLUNZMAN ASSOCIATES, INC. Intersection reference numbers are in upper left corner of turning movement boxes.

OVER 35 YEARS OF EXCELLENT SERVICE

Figure 16
Year 2035 Project Average Daily Traffic Volumes

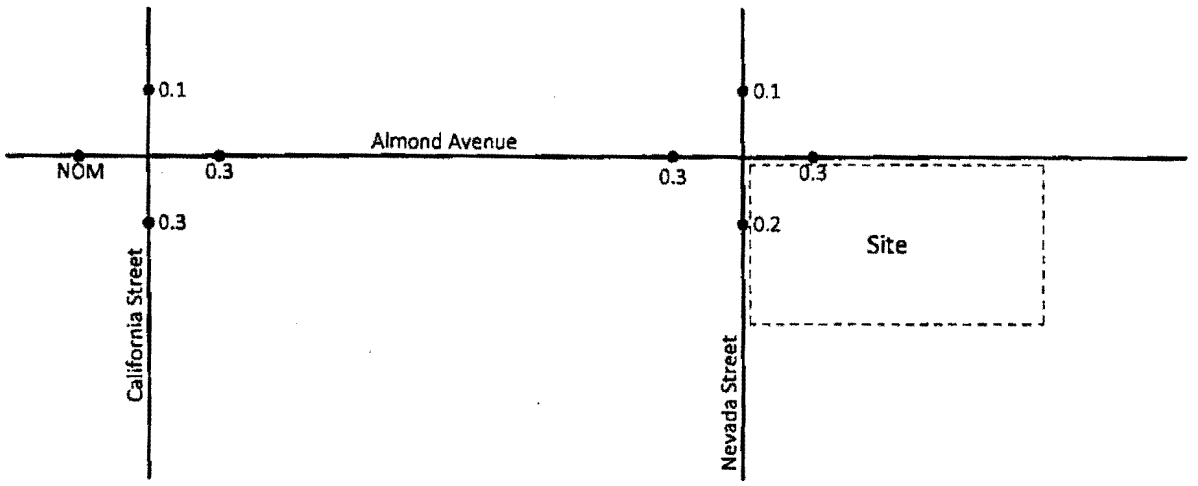

Legend

0.2 = Vehicles Per Day (1,000's)
NOM = Nominal, Less Than 50 Vehicles Per Day

N
NTS

KUNZMAN ASSOCIATES, INC.
OVER 35 YEARS OF EXCELLENT SERVICE

4983c/16

Figure 17
Year 2035 Project
Morning Peak Hour Intersection Turning Movement Volumes

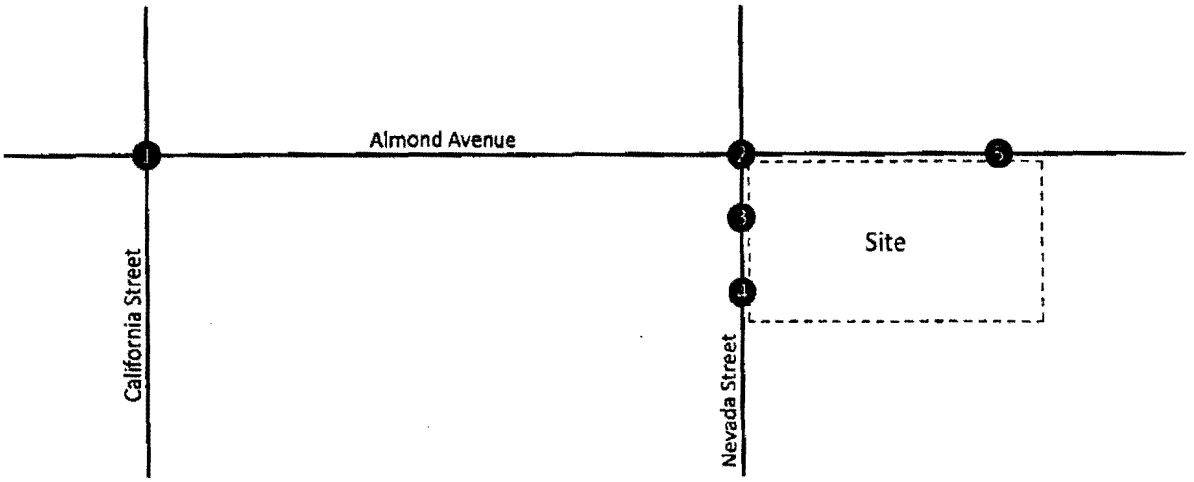

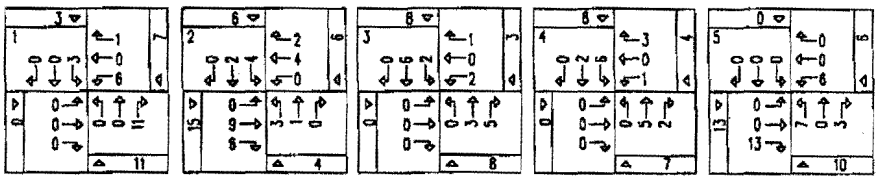

NTS

4983c/17

KUNZMAN ASSOCIATES, INC. Intersection reference numbers are in upper left corner of turning movement boxes.

OVER 35 YEARS OF EXCELLENT SERVICE

Figure 18
Year 2035 Project
Evening Peak Hour Intersection Turning Movement Volumes

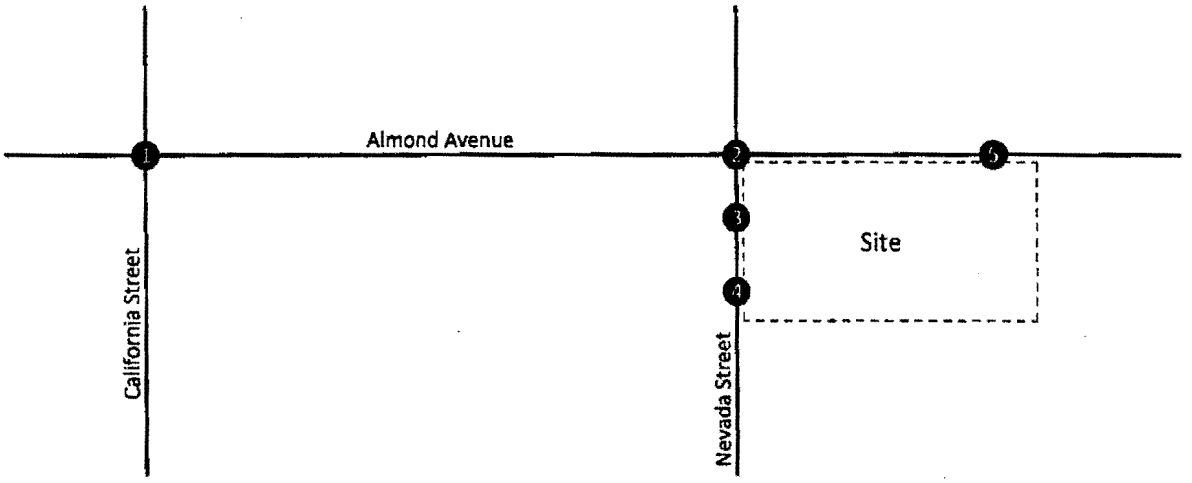

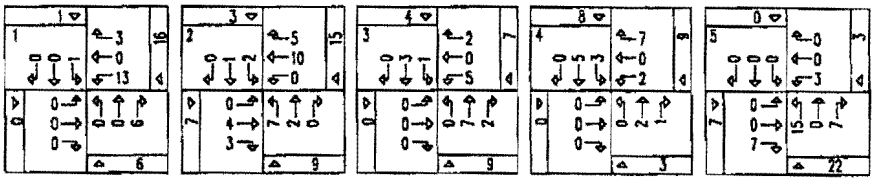

NTS

4983c/18

KUNZMAN ASSOCIATES, INC. Intersection reference numbers are in upper left corner of turning movement boxes.

OVER 35 YEARS OF EXCELLENT SERVICE

KUNZMAN ASSOCIATES, INC.

ALMOND AVENUE INDUSTRIAL PROJECT

TRAFFIC IMPACT ANALYSIS

December 1, 2011

Prepared by:

Amy Leung, E.I.T.,
Carl Ballard, and
William Kunzman, P.E.

William Kunzman

REGISTERED PROFESSIONAL ENGINEER
WILLIAM A. KUNZMAN
No. TR0056
TRAFFIC
STATE OF CALIFORNIA

1111 Town & Country Road, Suite 34
Orange, California 92868
(714) 973-8383

www.traffic-engineer.com

5016

Figure 2
Site Plan

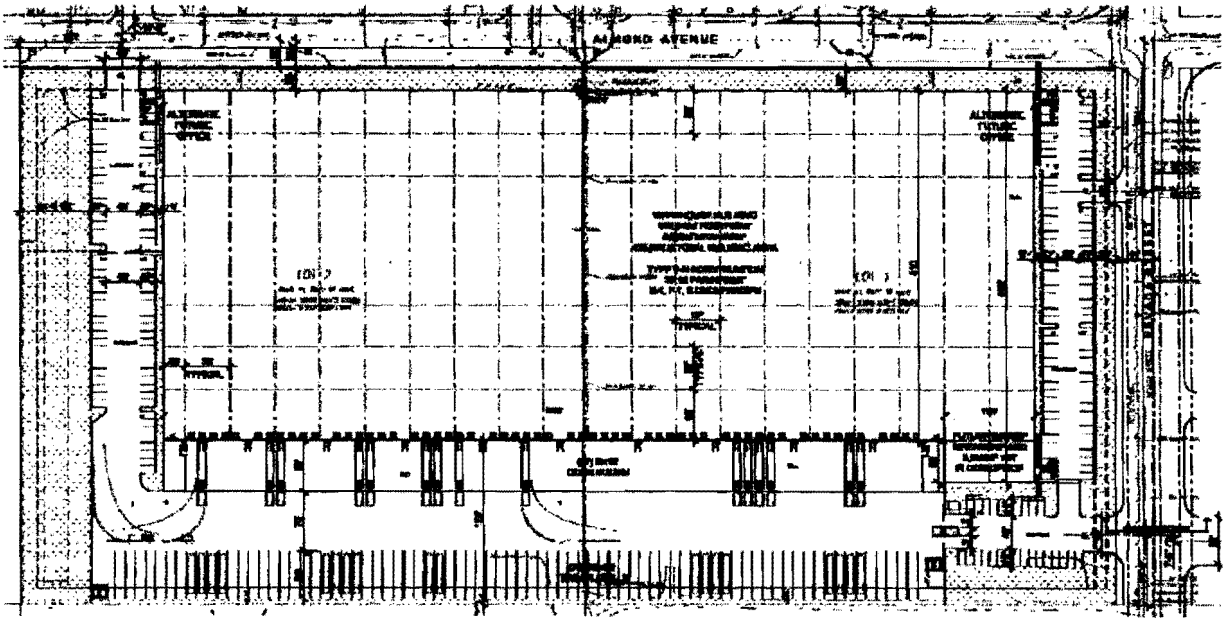

N

NTS

KUNZMAN ASSOCIATES, INC.

5016/2

OVER 35 YEARS OF EXCELLENT SERVICE

Figure 14
Opening Year (2013) Project
Morning Peak Hour Intersection Turning Movement Volumes

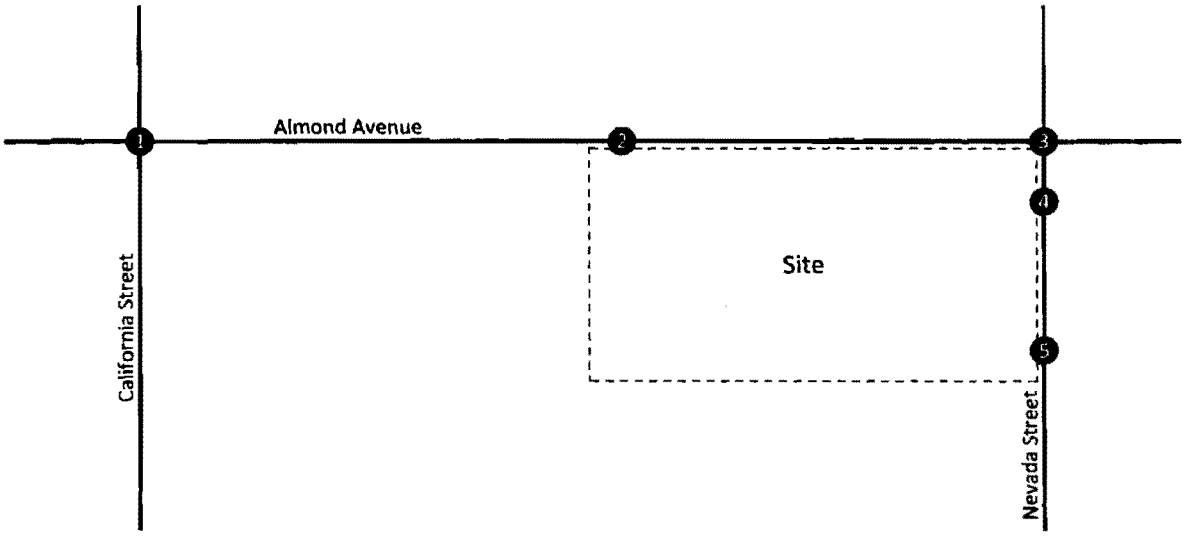

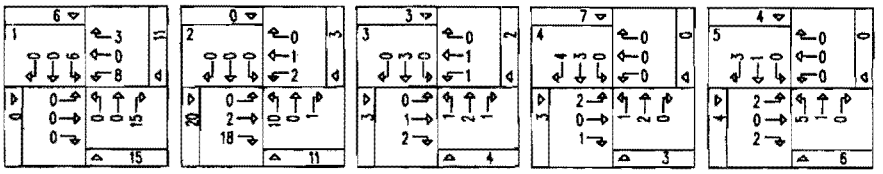

N
NTS

5016/14

KUNZMAN ASSOCIATES, INC. Intersection reference numbers are in upper left corner of turning movement boxes.

OVER 35 YEARS OF EXCELLENT SERVICE

Figure 15
Opening Year (2013) Project
Evening Peak Hour Intersection Turning Movement Volumes

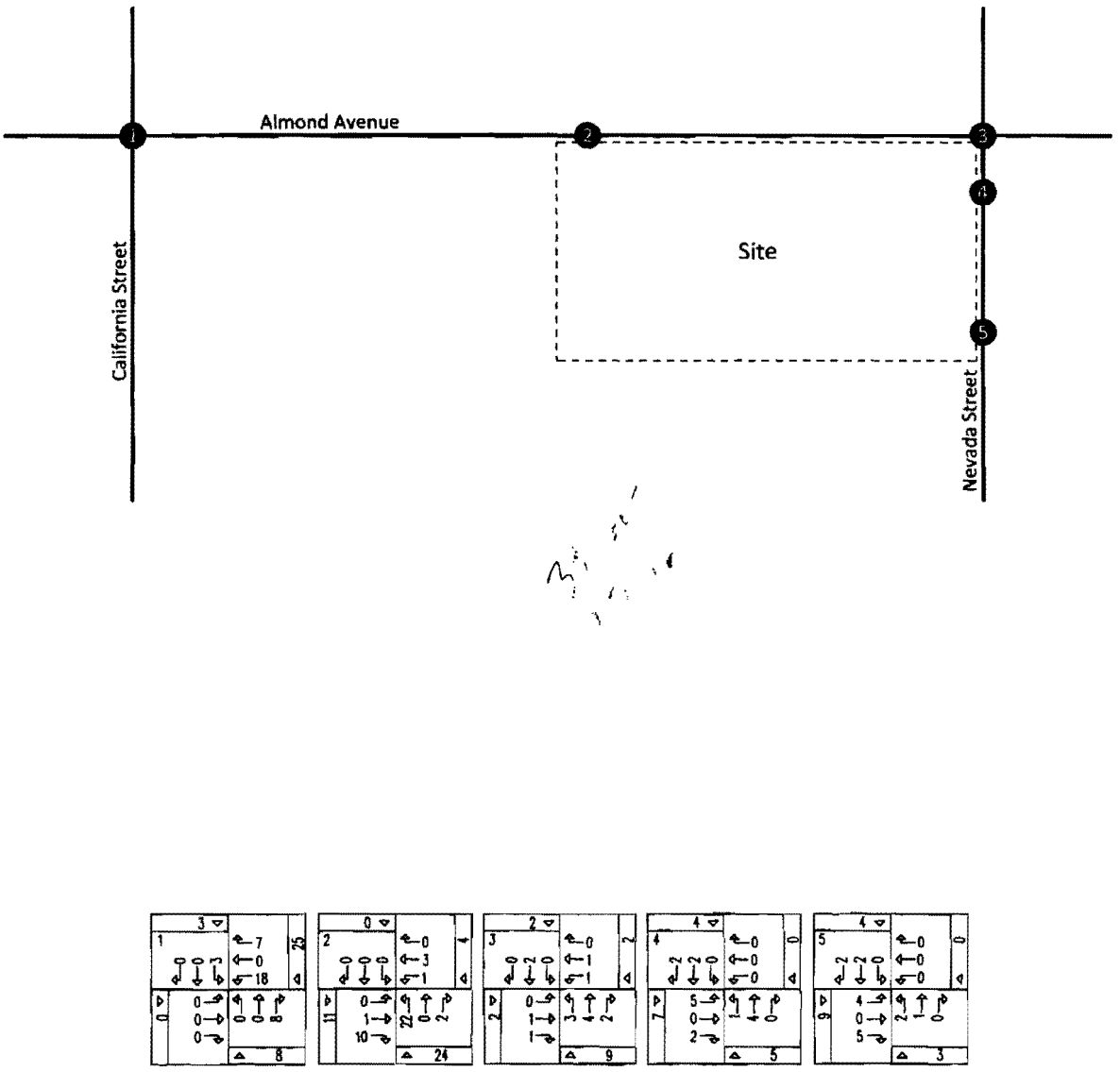

N
NTS

5016/15

KUNZMAN ASSOCIATES, INC. Intersection reference numbers are in upper left corner of turning movement boxes.

OVER 35 YEARS OF EXCELLENT SERVICE

Figure 16
Year 2035 Project Average Daily Traffic Volumes

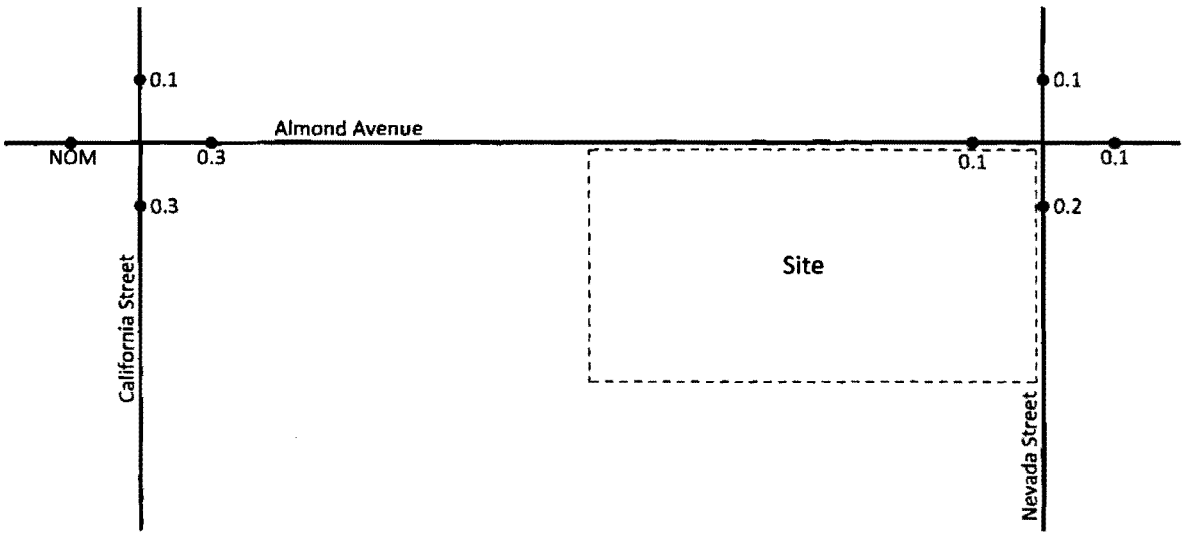

Legend

0.2 = Vehicles Per Day (1,000's)
NOM = Nominal, Less Than 50 Vehicles Per Day

N
NTS

KUNZMAN ASSOCIATES, INC.
OVER 35 YEARS OF EXCELLENT SERVICE

5016/16

Figure 17
Year 2035 Project
Morning Peak Hour Intersection Turning Movement Volumes

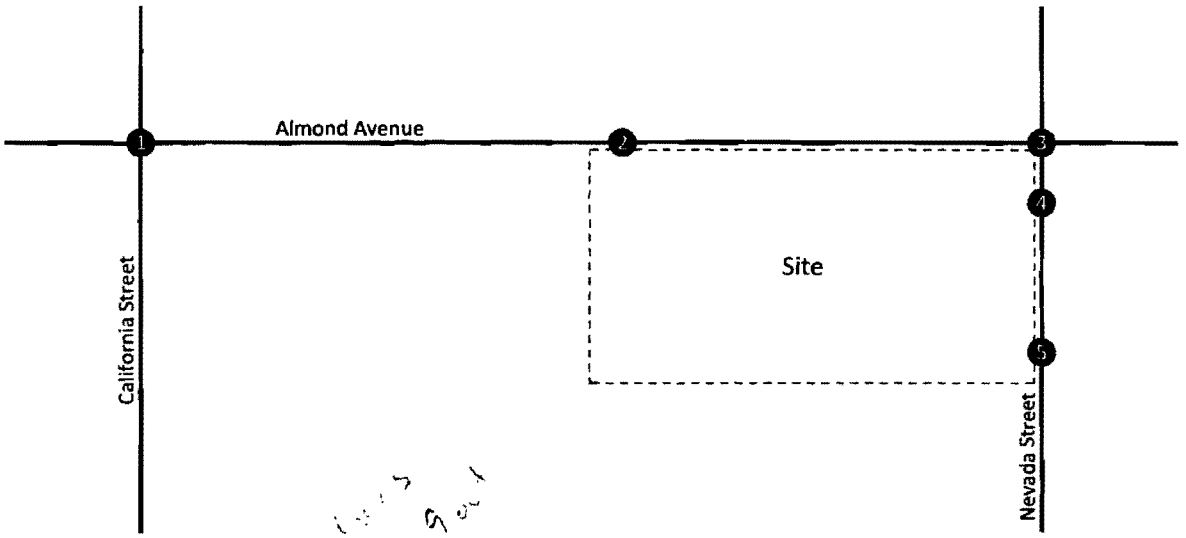

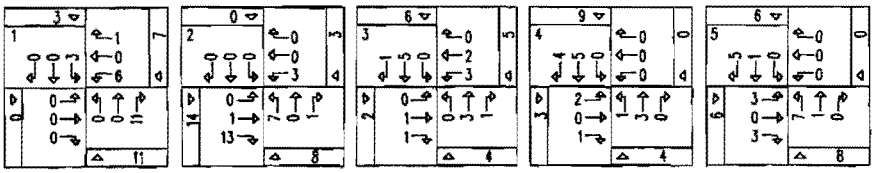

21

17

NTS

5016/17

KUNZMAN ASSOCIATES, INC. Intersection reference numbers are in upper left corner of turning movement boxes.

OVER 35 YEARS OF EXCELLENT SERVICE

Figure 18
Year 2035 Project
Evening Peak Hour Intersection Turning Movement Volumes

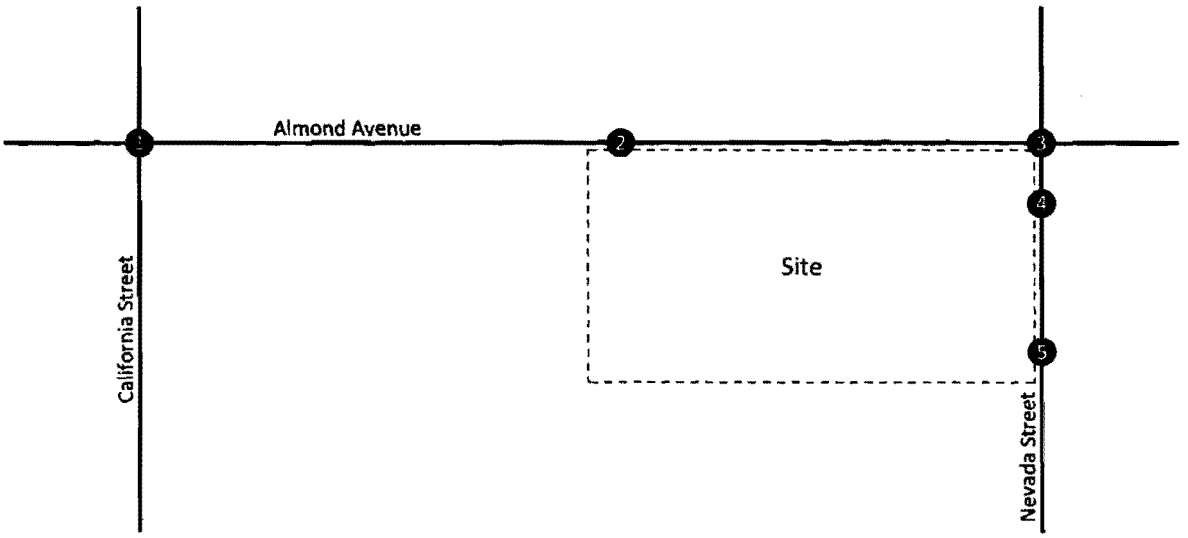

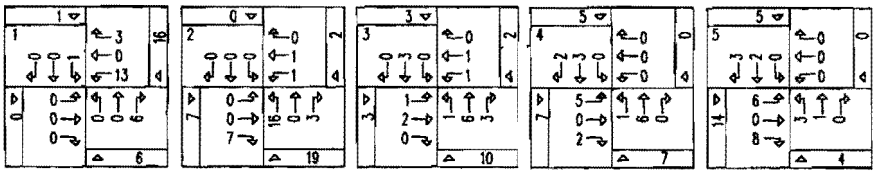

23 18

NTS

5016/18

KUNZMAN ASSOCIATES, INC. Intersection reference numbers are in upper left corner of turning movement boxes.

OVER 35 YEARS OF EXCELLENT SERVICE

KUNZMAN ASSOCIATES, INC.

OVER 35 YEARS OF EXCELLENT SERVICE

Final

September 28, 2011

Mr. Ed Petre, P.E.
COUNTY OF SAN BERNARDINO
825 East Third Street
San Bernardino, CA 92415-0182

Subject: Request to delete realignment of Pioneer Avenue at Alabama Street from project conditions: Project P201100121

Dear Mr. Petre:

The firm of Kunzman Associates, Inc. is pleased to provide the attached Prologis Redlands Distribution Center Buildings 9 & 10 Focused Traffic Analysis (dated September 28, 2011).

The focused traffic analysis shows acceptable Levels of Service for Year 2030 at the offset intersection of Alabama Street/Pioneer Avenue without a realignment of Pioneer Avenue. The recommended improvements to add a right turn lane to westbound Pioneer Avenue and stripe a through/right turn lane to northbound Alabama Street for Year 2030 should be conditioned to the parcel at the northeast or southeast corner of the Alabama Street/Pioneer Avenue intersection.

It has been a pleasure to service your needs on the project. Should you have any questions or if we can be of further assistance, please do not hesitate to call at (714) 973-8383.

Sincerely,

KUNZMAN ASSOCIATES , INC.

Carl Ballard
Principal Associate

#3692e

cc: Mr. Jim Jachetta, PROLOGIS

Pioneer is classified as a collector, currently 19'-20' wide

1111 TOWN & COUNTRY ROAD, SUITE 34
ORANGE, CALIFORNIA 92868
(714) 973-8383

WWW.TRAFFIC-ENGINEER.COM

Figure 1
Project Location Map

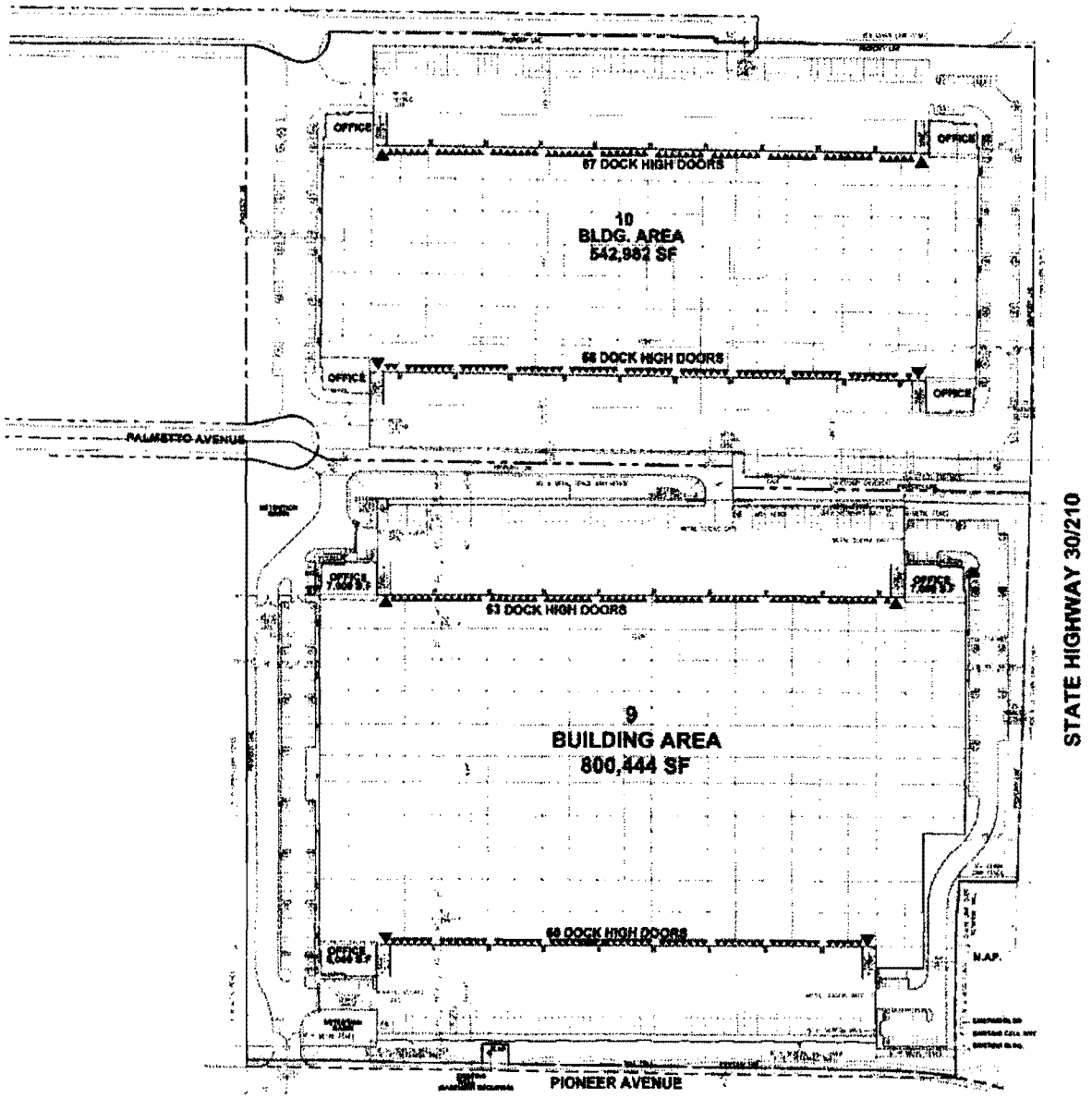

NTS

KUNZMAN ASSOCIATES, INC.

OVER 35 YEARS OF EXCELLENT SERVICE

3962e/1

Figure 2
Project (Building 9) Traffic Distribution - Cars

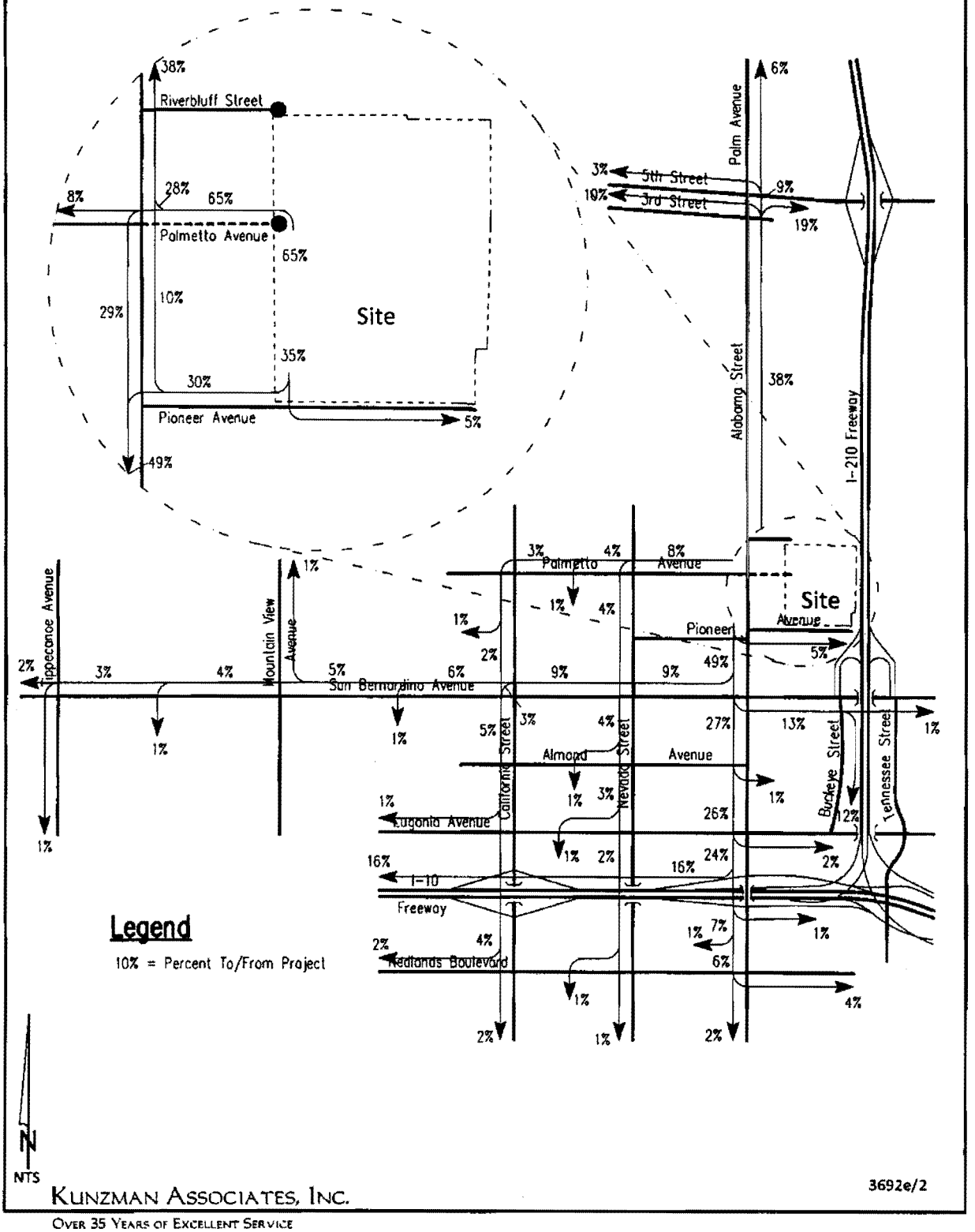

Figure 3
Project (Building 9) Traffic Distribution - Trucks

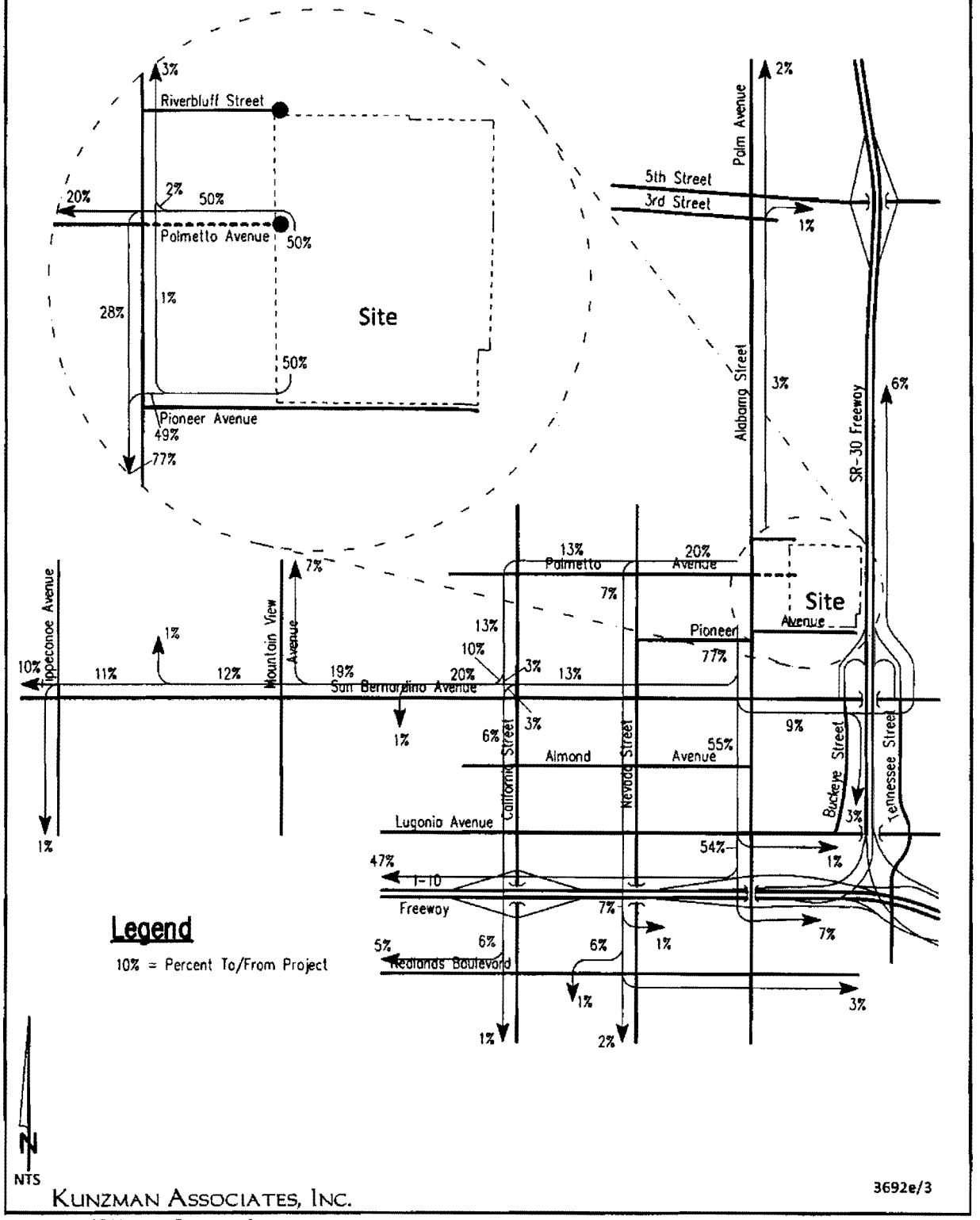

KUNZMAN ASSOCIATES, INC.

OVER 35 YEARS OF EXCELLENT SERVICE

3692e/3

Figure 4
Project (Building 10) Traffic Distribution - Cars

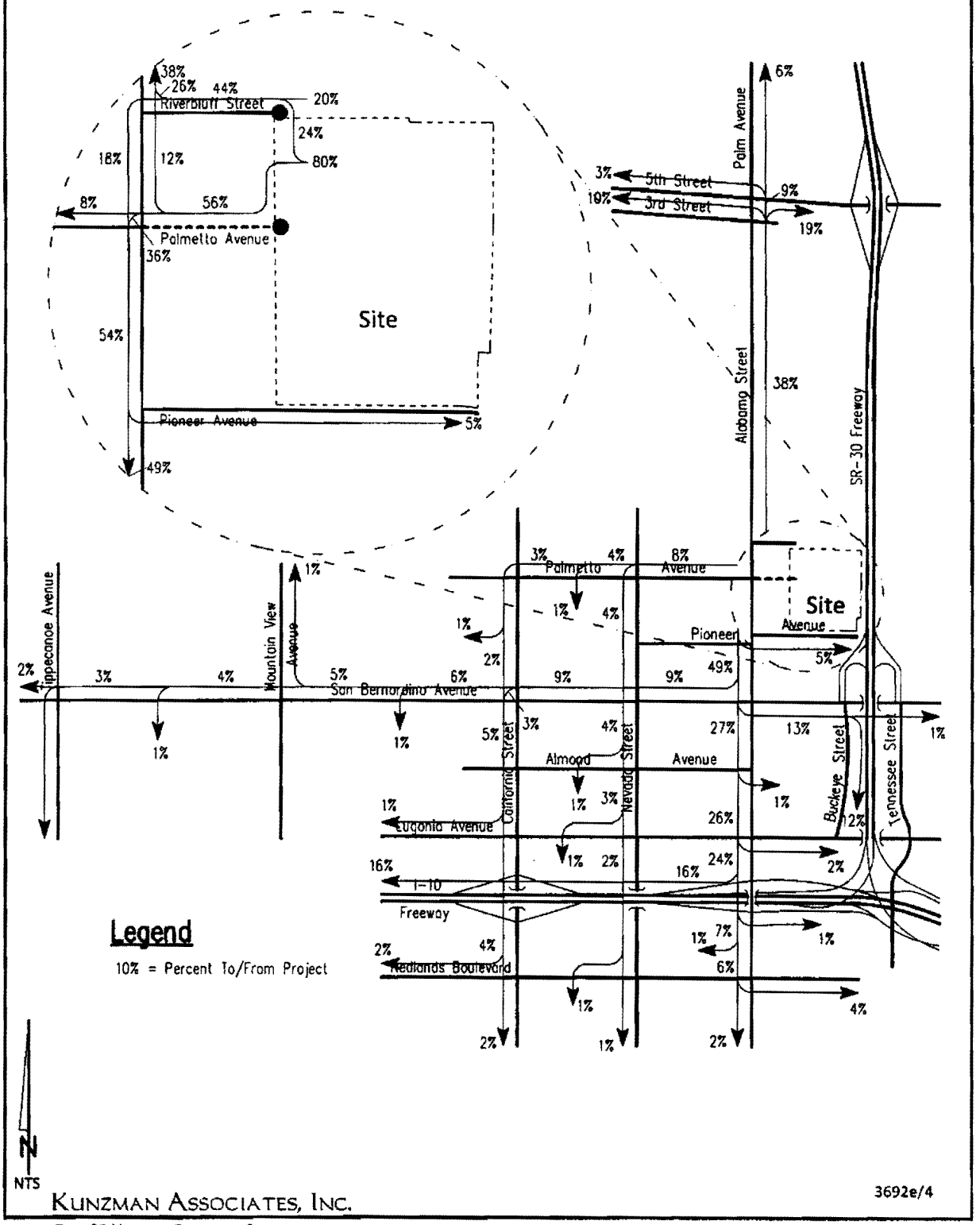

KUNZMAN ASSOCIATES, INC.

OVER 35 YEARS OF EXCELLENT SERVICE

Figure 5
Project (Building 10) Traffic Distribution - Trucks

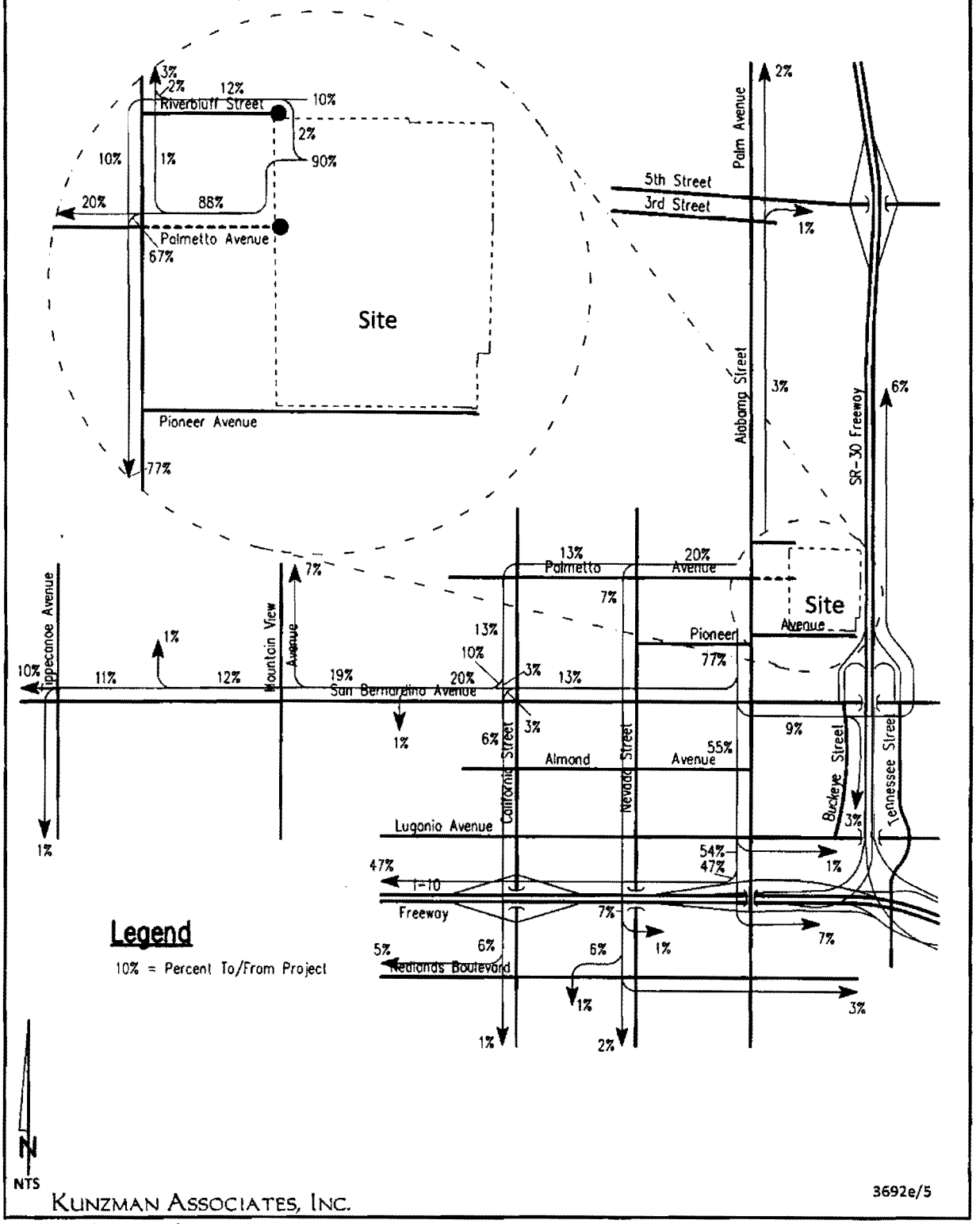

KUNZMAN ASSOCIATES, INC.
OVER 35 YEARS OF EXCELLENT SERVICE

Table 2

Total Project Traffic Generation in PCE's[1]

Building	Land Use	Quantity	Units[2]	Peak Hour						Daily
				Morning			Evening			
				Inbound	Outbound	Total	Inbound	Outbound	Total	
Building 9[3]	High-Cube Warehouse Distribution	800.444	TSF	56	50	106	41	62	103	1,528
Building 10[4]	High-Cube Warehouse Distribution	542.982	TSF	38	34	72	28	41	69	1,038
Total		1,343.426	TSF	94	84	178	69	103	172	2,566

[1] PCE's = Passenger Car Equivalent's

[2] TSF = Thousand Square Feet

[3] See Table 3

[4] See Table 4

Charlene S. Hwang

From: Warrick, Chris - LUS [Chris.Warrick@lus.sbcounty.gov]
Sent: Wednesday, February 22, 2012 11:40 AM
To: Charlene S. Hwang
Cc: Tatman, Judy - LUS; Petre, Ed
Subject: FW: University Crossings Cumulative Projects

Charlene,

Below is the list of all current entitled projects in the Donut Hole and other projects currently under review. Please call me at 909-387-4112 if you have any questions.

Chris Warrick, Planner
County of San Bernardino
Land Use Services Department
Planning Division
(909) 387-4112
cwarrick@lusd.sbcounty.gov

From: Warrick, Chris - LUS
Sent: Wednesday, February 22, 2012 11:21 AM
To: Tatman, Judy - LUS
Subject: RE: University Crossings Cumulative Projects

Judy, here's the current status of all projects in the Donut Hole.

Current entitled projects in the Donut Hole (not constructed)

1) Majestic - 205,000 SF high cube warehouse – SW Corner of Riverbluff and Buckeye
2) Watson Land - 377,692 SF high cube warehouse – east of California between Pioneer and San Bernardino. This was part of three total warehouse buildings. Two of which have been constructed. The last remaining building (377,692 remains entitled, but not constructed).
3) Oakmont – two high cube warehouse buildings (300,102 SF and 230,009 SF) – north of Palmetto between Nevada and Alabama.
4) Watson Land – 578,400 SF high cube warehouse – east of California between San Bernardino and Almond.
5) Prologis – two high cube warehouse buildings (800,444 SF and 182,803 SF) and two conventional warehouse buildings (45,296 SF and 42,935 SF) – North of Pioneer and west of I-10.
6) Mountain Grove – 1.85 million SF retail, 281 residential units, 2 hotels (200 rooms), and a 3,544 seat cinema – south of San Bernardino between Alabama and I-10.
7) Stone Creek – 216,500 SF retail, restaurants and offices, and a 180 room hotel – east of Alabama, north of Almond.

Currently under review – Not yet entitled

1) Newcastle – 425,940 SF high cube warehouse – SW corner of Nevada and Almond.
2) Rossmore Enterprises – 594,415 SF high cube warehouse – SE corner of Alabama and Pioneer.
3) Lytle Development – 425, 000 SF high cube warehouse – SE corner of Nevada and Almond.
4) Prologis – two high cube warehouse buildings with a total of 1,343,421 SF – north of Pioneer, west of I-10. (when approved, this project will replace No. 1 and No. 5 in the above list).

Chris Warrick, Planner
County of San Bernardino
Land Use Services Department
Planning Division
(909) 387-4112
cwarrick@lusd.sbcounty.gov

From: Tatman, Judy - LUS
Sent: Tuesday, February 21, 2012 4:36 PM
To: Warrick, Chris - LUS
Subject: FW: University Crossings Cumulative Projects

Chris
Is this something you could easily verify?

From: Charlene S. Hwang [mailto:chwang@urbanxroads.com]
Sent: Tuesday, February 21, 2012 11:28 AM
To: Tatman, Judy - LUS
Subject: University Crossings Cumulative Projects

Hi Judy,

I wanted to verify the following cumulative projects that are located within the Donut Hole in the County. Ed Petre asked that we follow up with you to verify whether these projects are indeed still active and should be included. In addition, Ed provided us with 3 additional projects (see below). However, one of the projects he provided (Almond Avenue Industrial Project) is missing the square footage (see highlighted item below). Could you please also provide the square footage associated with this project? Please feel free to call me if you would like to discuss further. Thank you in advance for your help.

Other projects within the "Donut Hole" (to be verified):

- 205,000 square feet of high cube warehouse – Majestic Realty – Riverside and Buckeye
- 500,000 square feet of high cube warehouse – North of San Bernardino Ave.
- 200,000 square feet of high cube warehouse – South of Palmetto & East of Alabama St.
- 500,000 square feet of high cube warehouse – North f San Bernardino Ave. & East of California St.
- 535,000 square feet of high cube warehouse – North of Palmetto between Nevada & Alabama
- 595,000 square feet of shopping center, 78 room hotel and 3,500 seat theater – Mountain Grove - San Bernardino & Alabama
- 11,500 square feet of shopping center, 15,000 square feet of high-turnover sit-down restaurant, 149,000 square feet of general office and 180 room hotel – Stone Creek – NW corner of Almond and Alabama
- 60,800 square feet of general office, 60,800 square feet of shopping center and 244 room hotel – Redlands Commerce Center - Lugonia between Alabama & Nevada
- 275,000 square feet of high cube warehouse – North of Palmetto & West of Alabama St.
- 400,000 square feet of high cube warehouse – Nevada St. & Palmetto Ave. (Newcastle)

Additional projects provided by Ed Petre:

- 1,343,426 square feet of high cube warehouse – Buckeye between Pioneer, Palmetto and Riverbluff (Prologis Redlands Distribution Buildings 9 and 10)
- 425,000 square feet of high cube warehouse – Redlands Distribution Facility SEC of Nevada Street / Almond Avenue
- Almond Avenue Industrial Project SWC of Nevada Street / Almond Avenue

Regards,

Charlene S. Hwang, P.E.
Senior Transportation Engineer

URBAN CROSSROADS
Improving Urban Places

IRVINE | CARLSBAD | RIVERSIDE
41 Corporate Park, Suite 300
Irvine, CA 92606
ph: (949) 660-1994 x222
www.urbanxroads.com

Charlene S. Hwang

From: Aric Evatt
Sent: Friday, March 02, 2012 2:19 PM
To: Charlene S. Hwang
Subject: FW: University Crossings Apartment Project - Traffic analysis
Attachments: 08139-01_Scope REV.PDF

Aric Evatt
Principal
Urban Crossroads, Inc.
Irvine, CA 92606
ph: 949.660.1994 x204

From: Young, Don [mailto:dyoung@cityofredlands.org]
Sent: Monday, February 06, 2012 3:16 PM
To: Aric Evatt
Cc: Dalquest, Robert
Subject: FW: University Crossings Apartment Project - Traffic analysis

Hello Aric

My primary concern is in regards to the 50 trip criteria.My interpretation of the County standard is that 50 or fewer trips at an intersection means that the impact does not have to be analyzed or mitigated. Due to the existing LOS on Alabama at Lugonia, I10, and Redlands Boulevard, any increase in trips will mean further degradation of an already poor situation. Given that the natural movement of vehicles from the development will be right-out onto Lugonia and then to Alabama, there absolutely needs to be an evaluation of the impact to the street network within the City of Redlands.

We require all project proponents to evaluate the impact that a project will have on these intersections and then to also pay a proportionate share if appropriate.

The cumulative analysis using the same list prepared for the Walmart project should be adequate.

I will let Mr. Dalquest respond to you also via separate email.

Donald Young, PE
Engineering Manager
Municipal Utilities and Engineering
City of Redlands
909-798-7585 x6

From: Aric Evatt [mailto:aevatt@urbanxroads.com]
Sent: Monday, February 06, 2012 2:35 PM
To: Young, Don
Cc: Aric Evatt
Subject: University Crossings Apartment Project

Hi Don,

The attached scope of work is for a project in the donut hole area of SB County. Ed Petre (County Traffic Division) has asked that I also coordinate with you on this scope. The two main points of coordination I received from Ed related to the following:

1) He wanted to me to verify whether you had any concern with full access being allowed to both the secondary and main access points? As Lugonia currently has a painted median and appears to offer full access to most commercial driveways in the vicinity of the project site heading east to Alabama Street, I was not sure if this would be a concern to the City of Redlands. If so, let's discuss.

2) In addition, Ed wanted me to verify the cumulative project list with you as well. I am simply proposing to use the same cumulative list we prepared with staff for the Redlands Walmart project. Let me know if that makes sense to you as well.

Finally, if you have any other comments or concerns on the scope of the study let me know.

Aric Evatt
Principal

URBAN CROSSROADS
Improving Urban Places
IRVINE | CARLSBAD | RIVERSIDE
41 Corporate Park, Suite 300
Irvine, CA 92606
ph: (949) 660-1994 x204
www.urbanxroads.com

URBAN CROSSROADS
41 Corporate Park | Suite 300 | Irvine, CA 92606 | (949) 660-1994
www.urbanXroads.com

February 6, 2012

Mr. Ed Petre
COUNTY OF SAN BERNARDINO PUBLIC WORKS
825 East Third Street
San Bernardino, CA 92415-0835

Subject: REVISED Traffic Impact Analysis Scoping Agreement for the proposed University Crossings Apartments Project

The firm of Urban Crossroads, Inc. is pleased to provide this letter documenting the recommended scoping / assumptions for the proposed University Crossings Apartment Project, which is generally located north of Lugonia Avenue and west of Alabama Street in the County of San Bernardino. The study area and project location are illustrated on Exhibit 1.

Our goal is to obtain comments County of San Bernardino staff, to ensure that the traffic study fully addresses the potential impacts of the proposed Project. The remainder of this letter describes the draft proposed analysis methodology, project trip generation, trip distribution, and project traffic assignment/project trips on the surrounding roadway network, which has been used to establish the draft proposed project study area and analysis locations. It should be noted that this scoping agreement has been prepared in accordance with the County of San Bernardino Congestion Management Program (CMP) traffic study guidelines (Appendix "C") and Article X of the San Bernardino County Road Planning and Design Standards (April 1993). Your input on/approval of the analysis locations is requested before the traffic count program is initiated. Per the County's request, a copy of the scoping document will also be provided to the City of Redlands for their review and input.

PROPOSED PROJECT

The proposed project consists of developing the site to include 321 apartment units by 2014. A preliminary site plan has been provided on Exhibit 2.

TRIP GENERATION ASSUMPTIONS

The project trip rates assumed in the traffic analysis are based on the Institute of Transportation Engineers (ITE) Trip Generation manual, 8th Edition (2008).

The ITE trip generation rates for land use code have been provided on Table 1. Table 2 summarizes the proposed trip generation for the project site. The project is anticipated to generate 2,135 trips per day, with 164 trips during the AM peak hour and 199 trips in the PM peak hour.

TRIP DISTRIBUTION ASSUMPTIONS

Exhibit 3 illustrates the proposed project trip distribution. The project assumes two (2) full access driveways along Lugonia Avenue. The trip distribution has been developed based on the existing roadway network and the surrounding uses in the vicinity of the proposed project.

PROPOSED STUDY AREA INTERSECTIONS

Per the City of San Bernardino traffic study guideline, intersections where the project is expected to add at least 50 peak hour trips should be analyzed. Based on this criterion, anticipated trip generation and trip distribution, the following intersections are anticipated to be evaluated (see Exhibit 1):

1. California Street / Lugonia Avenue
2. Nevada Street / Lugonia Avenue
3. Driveway 1 / Lugonia Avenue
4. Driveway 2 / Lugonia Avenue
5. Alabama Street / Lugonia Avenue

AMBIENT GROWTH ASSUMTIONS

An ambient growth rate of 2% per year is proposed for the study area intersections.

ANALYSIS SCENARIOS

Consistent with the County of San Bernardino CMP, Road Planning and Design Standards and Caltrans TIA guidelines, intersection analyses will be provided for the following analysis scenarios:

- Existing (2012) Conditions
- Existing plus Ambient Growth (2014) Conditions – with 2% per year ambient growth
- Existing plus Ambient Growth plus Project (2014) Conditions
- Existing plus Ambient Growth plus Project plus Cumulative (2014) Conditions
- Horizon Year (2035) Without Project Conditions
- Horizon Year (2035) With Project Conditions

Horizon Year (2035) conditions will be based on forecasted data from the City of San Bernardino's East Valley Traffic Model (EVTM).

LEVEL OF SERVICE CRITERIA

Per the County of San Bernardino Road Planning and Design Standards, LOS "D" is the minimum level of service for intersections within the County within the Valley areas. Therefore, any intersection operating at LOS "E" or "F" will be considered deficient for the purposes of this analysis. The City of Redlands has established LOS "C" as the minimum level of service for its intersections. Therefore, any intersection operating at LOS "D" or worse will be considered deficient for the purposes of this analysis.

THRESHOLD OF SIGNIFICANCE

Per the County of San Bernardino Road Planning and Design Standards, the following thresholds of significance will be utilized to determine whether the addition of project traffic at a study intersection results in a significant project-related impact:

- The addition of project traffic to an intersection exceeds the thresholds provided in Table 3 below (Table 10-1 of Article X);

- The Project's access to a major street requires an access that would create an unsafe situation or a new traffic signal, and/or major revisions to an existing traffic signal; or
- The Project adds traffic to a street with design features (e.g., inadequate geometric narrow width, road side ditches, sharp curves, poor sight distance, inadequate pavement structure) that may cause potential safety problems with the addition of project traffic.

Table 3
Intersection Thresholds of Significance for Traffic Impact Studies

Existing LOS	Total Project Peak Hour Trip Generation
A	500
B	250
C	150
D	50
E	30
F	15

CUMULATIVE DEVELOPMENTS

Please review the attached cumulative development projects and identify the cumulative projects that should be included in the traffic impact analysis (see Table 3 and Exhibit 4).

Please provide your approval or comments finalizing the study area and analysis assumptions.

If you have any questions, please contact me directly at (949) 660-1994, extension 204.

Respectfully submitted,

URBAN CROSSROADS, INC.

Aric Evatt, PTP
Principal

AE:JC:CH

JN: 08139-01_SCOPE (REV)
Attachments

EXHIBIT 1

LOCATION MAP

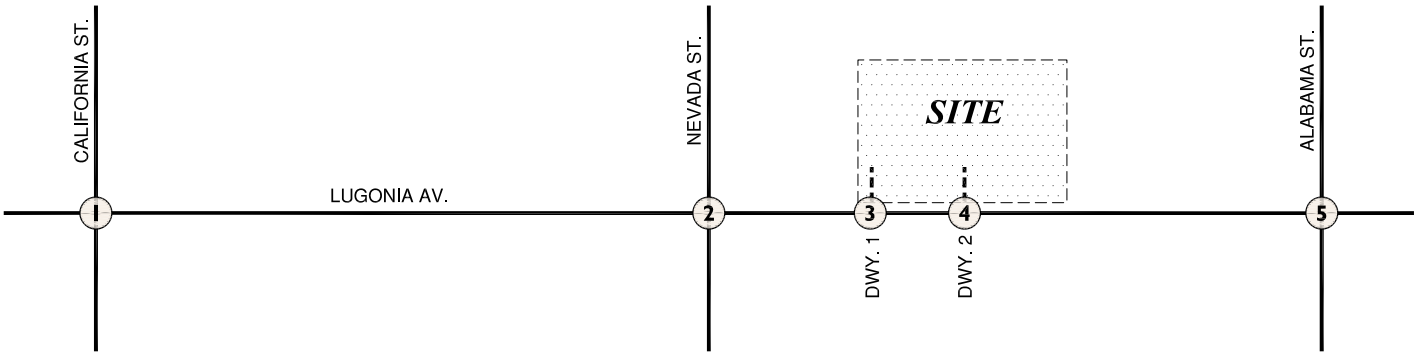

LEGEND:

5 - INTERSECTION ANALYSIS LOCATION

---- - FUTURE ROADWAY

N

EXHIBIT 2

SITE PLAN

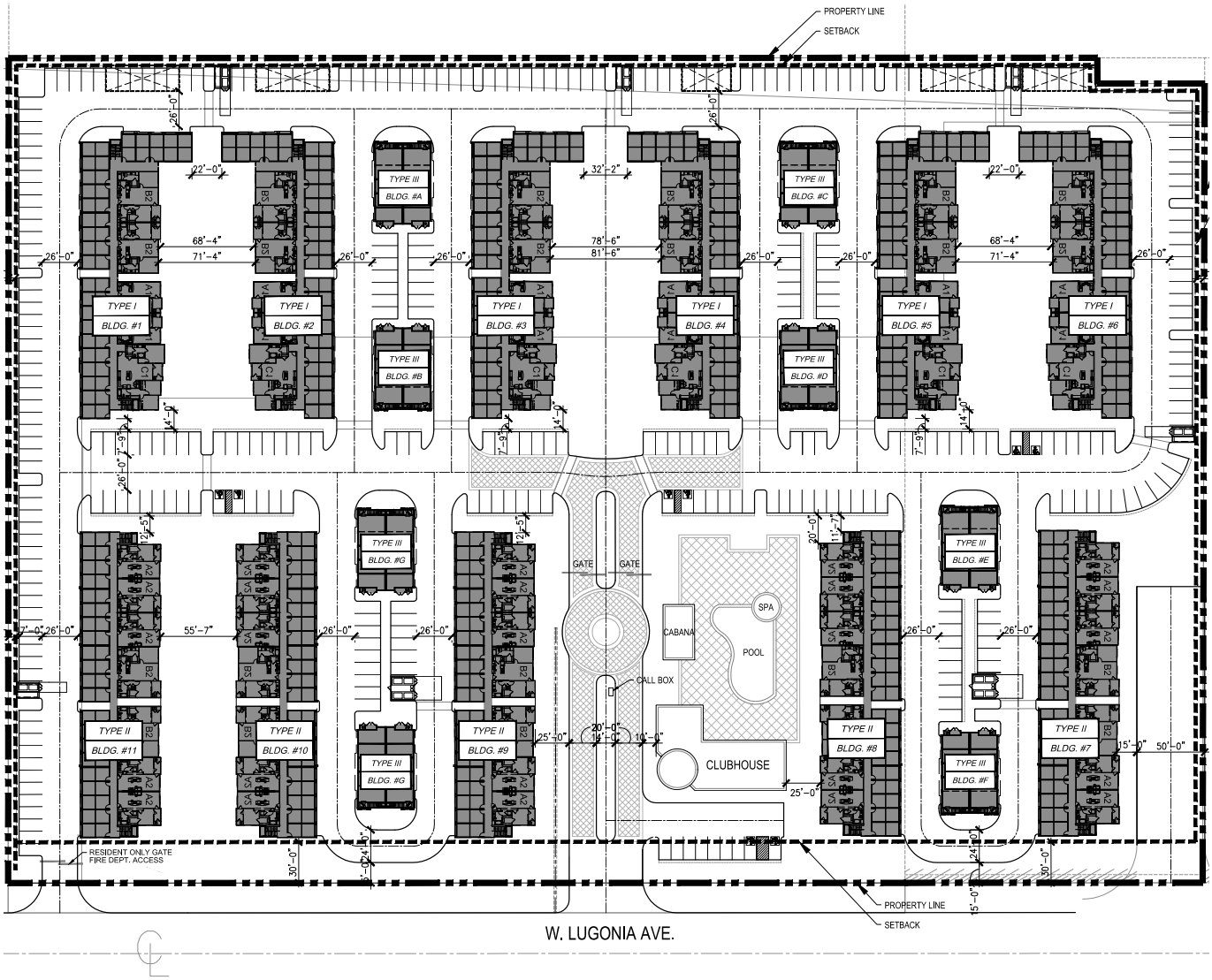

N

EXHIBIT 3

PROJECT TRIP DISTRIBUTION

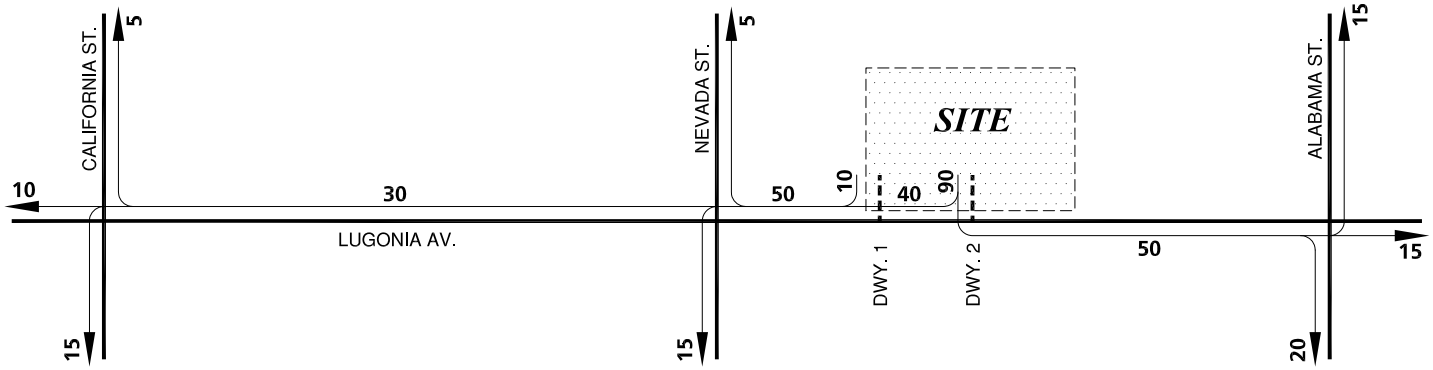

LEGEND:

10 = PERCENT TO/FROM PROJECT

N

EXHIBIT 4

CUMULATIVE DEVELOPMENT LOCATION MAP

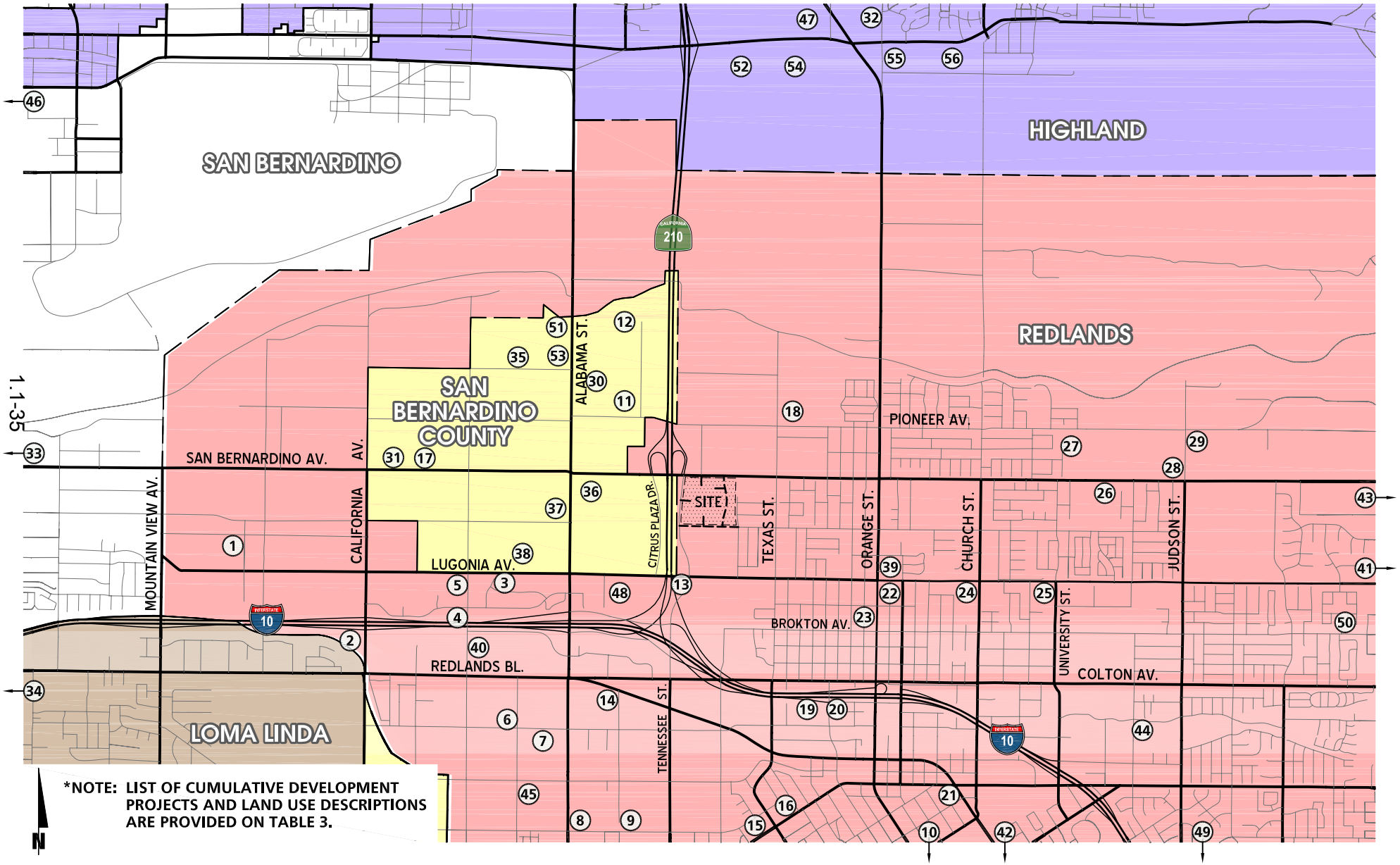

*NOTE: LIST OF CUMULATIVE DEVELOPMENT PROJECTS AND LAND USE DESCRIPTIONS ARE PROVIDED ON TABLE 3.

TABLE 1

PROJECT TRIP GENERATION RATES[1]

LAND USE	ITE CODE	UNITS[2]	AM PEAK HOUR			PM PEAK HOUR			DAILY
			IN	OUT	TOTAL	IN	OUT	TOTAL	
Apartment	220	DU	0.10	0.41	0.51	0.40	0.22	0.62	6.65

[1] Trip Generation Source: Institute of Transportation Engineers (ITE), Trip Generation Manual, Eighth Edition (2008).

[2] DU = Dwelling Units

TABLE 2

PROJECT TRIP GENERATION SUMMARY

LAND USE	QUANTITY	UNITS[1]	AM PEAK HOUR			PM PEAK HOUR			DAILY
			IN	OUT	TOTAL	IN	OUT	TOTAL	
Apartment	321	DU	32	132	164	128	71	199	2,135

[1] DU = Dwelling Units

Table 3 (Page 1 of 5)

Cumulative Development Weekday Trip Generation

#	Project/Location	Quantity	Units[2]	PM Peak Hour In	PM Peak Hour Out	PM Peak Hour Total	Weekday Daily
1	East side of Research, south of Almond, n/o Lugonia	880.118	TSF	158	598	757	6,126
				126	476	602	4,874
		Truck Trips					
				5	21	26	212
				8	*31*	*39*	*318*
				7	28	35	284
				15	*56*	*70*	*568*
				20	74	93	755
				59	*221*	*280*	*2,266*
				82	308	390	3,152
	Subtotal #1 (Vehicles)			**208**	**784**	**992**	**8,026**
2	South of I-10 & West of California St.	51.101	TSF	61	78	138	2,265
3	Northeast of Plum Ln. & Idaho St.	8.132	TSF	15	73	88	193
4	South side of Orange Tree Ln., West of Nevada St.	51.432	TSF	23	113	136	800
5	South side of Lugonia Ave. West of Nevada St.	102	RMS	32	29	60	833
6	1776 Park Ave.	52.559	TSF	49	133	182	1,899
7	415-495 Park Ave.	122.604	TSF	114	310	424	4,430
8	Northeast of Alabama St. and Orange Ave.	77	DU	27	13	40	447
9	Northeast of Orange Ave. and Kansas St.	160	DU	16	10	26	557
10	East side of Alessandro, North of Sunset Hills Ln.	27	DU	17	10	27	258
11	Buckeye between Pioneer, Palmetto and Riverbluff	1,100.000	TSF	33	77	110	1,584
				26	61	88	1,260
		Truck Trips					
				1	3	4	55
				2	*4*	*6*	*82*
				2	4	5	73
				3	*7*	*10*	*147*
				4	9	14	195
				12	*28*	*41*	*586*
				17	40	57	815
	Subtotal #11 (Vehicles)			**43**	**101**	**144**	**2,076**
12	Majestic Realty-Riverside and Buckeye	205.000	TSF	6	14	21	295
				5	11	16	235
		Truck Trips					
				0	0	1	10
				0	*1*	*1*	*15*
				0	1	1	14
				1	*1*	*2*	*27*
				1	2	3	36
				2	*5*	*8*	*109*
				3	7	11	152
	Subtotal #12 (Vehicles)			**8**	**19**	**27**	**387**

Table 3 (Page 2 of 5)

Cumulative Development Weekday Trip Generation

#	Project/Location	Quantity	Units[2]	PM Peak Hour In	PM Peak Hour Out	PM Peak Hour Total	Weekday Daily
13	Southwest of Tennessee St. and Lugonia Ave.	8.048	TSF	10	12	22	357
14	South side of Redlands Blvd., West of Kansas St.	7	STALLS	20	19	39	756
15	708 Brookside Ave.	7.000	TSF	15	72	87	172
16	520 Brookside Ave.	15.107	TSF	4	4	8	138
17	North of San Bernardino Ave. & East of #61	500.000	TSF	15	35	50	720
				12	28	40	573
		Truck Trips					
				1	1	2	25
				1	*2*	*3*	*37*
				1	2	2	33
				1	*3*	*5*	*67*
				2	4	6	89
				6	*13*	*18*	*266*
				8	18	26	371
	Subtotal #17 (Vehicles)			**20**	**46**	**66**	**943**
18	Northeast corner of Texas St. & Pioneer Ave.	12	DU	8	4	12	115
19	South of I-10 Fwy. & West of Eureka St.	150.300	TSF	179	228	407	6,661
20	South side of Pearl Ave. between Eureka St. & Third St.	18.200	TSF	22	28	49	807
21	500 East Citrus Ave.	21.000	TSF	11	19	30	480
22	Southeast of Lugonia Ave. & Orange St.	6.750	TSF	8	10	18	299
23	1135 Orange St.	3.243	TSF	4	5	9	144
24	Southwest of Lugonia Ave. & Church St.	37	DU	13	6	19	215
25	Southeast of Lugonia Ave. & Occidental	12	DU	8	4	12	115
26	South of San Bernardino Ave., West of Grove St.	10	DU	6	4	10	96
27	Between San Bernardino & Pioneer, East of Deanna Wy.	26	DU	17	10	26	249
28	North of San Bernardino Ave. & West of Judson St.	74	DU	47	27	75	708
29	Southeast of Pioneer Ave. & Judson St.	33	DU	21	12	33	316
30	South of Palmetto & East of Alabama St.	200.000	TSF	6	14	20	288
				5	11	16	229
		Truck Trips					
				0	0	1	10
				0	*1*	*1*	*15*
				0	1	1	13
				1	*1*	*2*	*27*
				1	2	2	36
				2	*5*	*7*	*107*
				3	7	10	148
	Subtotal #30 (Vehicles)			**8**	**18**	**26**	**377**

Table 3 (Page 3 of 5)

Cumulative Development Weekday Trip Generation

#	Project/Location	Quantity	Units[2]	PM Peak Hour In	PM Peak Hour Out	PM Peak Hour Total	Weekday Daily
31	North of San Bernardino Ave. & East of California St.	500.000	TSF	15	35	50	720
				12	28	40	573
		Truck Trips					
				1	1	2	25
				1	*2*	*3*	*37*
				1	2	2	33
				1	*3*	*5*	*67*
				2	4	6	89
				6	*13*	*18*	*266*
				8	18	26	371
	Subtotal #31 (Vehicles)			**20**	**46**	**66**	**943**
32	121 SFDR Housing Gated Community	121	DU	77	45	122	1,158
33	CUP No. 10-04	42.005	TSF	5	36	41	293
34	CUP No. 10-02	3	STALLS	8	8	17	324
35	North of Palmetto between Nevada & Alabama	535.000	TSF	16	37	54	770
				13	30	43	613
		Truck Trips					
				1	1	2	27
				1	*2*	*3*	*40*
				1	2	2	36
				1	*3*	*5*	*71*
				2	5	7	95
				6	*14*	*20*	*285*
				8	19	28	396
	Subtotal #35 (Vehicles)			**21**	**49**	**70**	**1,009**
36	Mountain Grove - San Bernardino & Alabama	595.000	TSF	1,029	1,071	2,100	21,646
		PM, 26% Saturday)		*-357*	*-357*	*-714*	
		78	RMS	24	22	46	637
		3,500	SEATS	455	661	1,120	6,160
	Subtotal # 36			**1,151**	**1,397**	**2,552**	**28,443**
37	Stone Creek - NW corner of Almond and Alabama	11.500	TSF	14	17	31	510
		15.000	TSF	99	69	167	1,907
		Pass-by (43%)		*-36*	*-36*	*-72*	*-820*
		149.000	TSF	42	204	246	1,813
		180	RMS	56	50	106	1,471
	Subtotal # 37			**174**	**305**	**479**	**4,881**
38	Redlands Commerce Center - Lugonia between Alabama & Nevada	60.800	TSF	25	122	147	910
		60.800	TSF	72	92	165	2,695
		244	RMS	76	68	144	1,993
	Subtotal # 38			**173**	**283**	**456**	**5,598**
39	Northeast of Orange St. & Lugonia Ave.	228	DU	146	84	230	2,182
40	1020-1050 Nevada	63.638	TSF	11	43	55	443
41	Madeira Ave., West of Sapphire	27	DU	17	10	27	258
42	Center St., East of Burke St.	15	DU	10	6	15	144
43	Southwest corner of San Bernardino Ave. & Wabash Ave.	76	DU	49	28	77	727

Table 3 (Page 4 of 5)

Cumulative Development Weekday Trip Generation

#	Project/Location	Quantity	Units[2]	PM Peak Hour In	PM Peak Hour Out	PM Peak Hour Total	Weekday Daily
44	Southeast corner of Grove St. & Sylvan Blvd.	40	DU	14	7	21	232
45	Southeast corner of Citrus & Iowa	141.000	TSF	25	96	121	981
46	Santa Fe Depot	2.554	TSF	3	4	7	113
		3.105	TSF	55	50	105	1,540
	Subtotal # 46			**58**	**54**	**112**	**1,654**
47	Greenspot Village & Marketplace CMP	Planning Area 1 (Commercial)					
		200.000	TSF	452	470	922	10,626
		355.000	TSF	728	760	1,487	15,474
		3.600	TSF	175	175	349	3,495
		10.000	TSF	129	129	258	1,482
		12.000	TSF	211	195	406	5,953
		25.000	TSF	582	582	1,165	11,650
		40.000	TSF	201	99	300	3,598
		ning Area 1 Subtotal		1,298	1,180	2,478	26,177
		of Commercial only)		*-310*	*-310*	*-620*	*-5,235*
		anning Area 1 Total		**989**	**870**	**1,859**	**20,942**
		Planning Area 2 (Residential)					
		378	DU	151	83	234	2,514
		172	DU	60	29	89	999
		anning Area 2 Total		**211**	**112**	**324**	**3,513**
		Planning Area 3 (Village Center - Mixed Use)					
		7.000	TSF	41	46	87	555
		80.000	TSF	269	279	548	5,874
		7.000	TSF	35	17	52	630
		ercial Only) Subtotal		345	343	688	7,059
		of Commercial only)		*-86*	*-86*	*-172*	*-1,412*
		Pass-by Reduction)		*259*	*257*	*516*	*5,647*
		240	RMS	74	67	142	1,961
		60.000	TSF	25	121	146	900
		172	DU	69	38	107	1,144
		78	DU	27	13	41	453
		anning Area 3 Total		**454**	**496**	**950**	**10,105**
		Total Commercial		1,248	1,127	2,374	26,589
		Total Residential		308	164	471	5,110
		Total Office		25	121	146	900
		roject Trips Subtotal		1,580	1,412	2,991	32,599
		ernal Capture (13%)		*-184*	*-184*	*-368*	*-4,238*
	Subtotal #47 (Net Project External Trips)			***1,396***	***1,228***	***2,624***	***28,361***
48	1222 Indiana Ct.	5.550	TSF	1	5	5	39
49	Northeast corner of Ford St. & Patricia	20.500	TSF	5	6	11	187
50	Northeast Wabash Ave. & Nice Ave.	60.857	TSF	8	8	16	152
		48.045	TSF	6	41	47	335
	Subtotal # 50			**14**	**49**	**62**	**487**

Table 3 (Page 5 of 5)

Cumulative Development Weekday Trip Generation

#	Project/Location	Quantity	Units[2]	PM Peak Hour In	PM Peak Hour Out	PM Peak Hour Total	Weekday Daily
51	North of Palmetto & West of Alabama St.	275.000	TSF	8	19	28	396
				7	15	22	315
		Truck Trips					
				0	1	1	14
				0	*1*	*1*	*21*
				0	1	1	18
				1	*2*	*3*	*37*
				1	2	3	49
				3	*7*	*10*	*146*
				4	10	14	204
	Subtotal #51 (Vehicles)			**11**	**25**	**36**	**519**
52	Regency Center	3.417	TSF	60	55	116	1,695
		Pass-by (25%)		*-14*	*-14*	*-29*	*-424*
		42.840	TSF	177	184	360	3,914
		Pass-by (25%)		*-45*	*-45*	*-90*	*-979*
	Subtotal # 52			**177**	**180**	**357**	**4,207**
53	Nevada St. & Palmetto Ave. (Newcastle)	400.000	TSF	12	28	40	576
				10	22	32	458
		Truck Trips					
				0	1	1	20
				1	*1*	*2*	*30*
				1	1	2	27
				1	*3*	*4*	*53*
				1	3	5	71
				4	*10*	*15*	*213*
				6	14	21	296
	Subtotal #53 (Vehicles)			**16**	**37**	**52**	**755**
54	Jack in the Box Center	6.280	TSF	111	102	213	3,116
		Pass-by (40%)		*-43*	*-43*	*-85*	*-1,246*
		7.065	TSF	13	13	26	303
		Pass-by (20%)		*-3*	*-3*	*-5*	*-61*
		13.771	TSF	25	26	51	591
		Pass-by (35%)		*-9*	*-9*	*-18*	*-207*
	Subtotal # 54			**95**	**87**	**182**	**2,496**
55	133 SFD Housing (SE corner of Orange St. & Greenspot)	133	DU	85	49	134	1,273
56	Blossom Trails	14	DU	9	5	14	134
		306	DU	107	52	159	1,778
	Subtotal # 56			**116**	**57**	**173**	**1,912**
GRAND TOTAL				**4,906**	**6,421**	**11,332**	**124,625**

[1] SFDR = Single Family Detached Residential

[2] DU = Dwelling Units; TSF = Thousand Square Feet; VFP = Vehicle Fueling Position

Charlene S. Hwang

From: Aric Evatt
Sent: Monday, February 06, 2012 12:01 PM
To: Charlene S. Hwang
Subject: FW: University Crossings

Please update the scope of work for job 08139 to reflect Ed's comments. Send me the revised scope in PDF so I can provide to City of Redlands.

Aric Evatt
Principal
Urban Crossroads, Inc.
Irvine, CA 92606
ph: 949.660.1994 x204

From: Petre, Ed [mailto:epetre@dpw.sbcounty.gov]
Sent: Thursday, February 02, 2012 10:18 AM
To: Aric Evatt
Cc: Tatman, Judy - LUS; Basta, Sameh
Subject: RE: University Crossings

Aric
There is a couple things that I noticed:

1. Please follow Chapter 10 of our Road Planning and Design Standards. Please use Year 2035 horizon year conditions with and without project. See 10-7 regarding significant impacts. The acceptable LOS in the County Valley areas is D.
   http://www.sbcounty.gov/dpw/land/pdf/ROAD%20PLANNING%20&%20DESIGN%20STANDARDS.pdf (Road Planning and Design Standards)

2. The westerly driveway needs a turn around
3. Use the East Valley Model
4. Full access needs to be discussed internally and with the City of Redlands and it will be based on the findings within the study
5. Please verify cumulative impacts with the City of Redlands.
6. Please send the revised scope to the City of Redlands for review.
7. I believe in the discussion we had with the applicant that the main driveway is in line the driveway across the street. Please run signal warrants.

We will get additional information to you regarding the cumulative projects within the County's jurisdiction. Please have the applicant submit a $3,400 check for our traffic study review.
Thanks
Ed Petre

From: Aric Evatt [mailto:aevatt@urbanxroads.com]
Sent: Wednesday, February 01, 2012 5:52 PM
To: Petre, Ed
Subject: University Crossings
Importance: High

Hi Ed, the attached traffic study scope of work is for a small apartment project in the "donut hole" area of the County of San Bernardino. The site is generally located north of Lugonia between Nevada and Alabama. Could you take a look at

the proposed traffic study scope and let me know your comments. I have also provided a sample cumulative list from a nearby project that may be useful in compiling a list of other development projects.

Thanks!

Aric Evatt
Principal

URBAN CROSSROADS
Improving Urban Places
IRVINE | CARLSBAD | RIVERSIDE
41 Corporate Park, Suite 300
Irvine, CA 92606
ph: (949) 660-1994 x204
www.urbanxroads.com

APPENDIX 1.2

Post-Processing Worksheets

California Street / Lugonia Avenue

FUTURE DIRECTIONAL TURN VOLUMES FROM FUTURE DIRECTIONAL LINK VOLUMES

NCHRP 255, PAGE 105 Written by: FHWA (C. Fleet)

YEAR 2030 TRAFFIC CONDITIONS					YEAR 2030 TRAFFIC CONDITIONS				
WEEKDAY AM PEAK HOUR INPUT DATA					WEEKDAY PM PEAK HOUR INPUT DATA				
APPROACH	TURNING MOVEMENT	BASE YEAR COUNT	APPROACH	FUTURE YEAR TOTAL	APPROACH	TURNING MOVEMENT	BASE YEAR COUNT	APPROACH	FUTURE YEAR TOTAL
NORTH	LEFT	**190**	SOUTH LEG		NORTH	LEFT	**66**	SOUTH LEG	
BOUND	THRU	**357**	IN ...	**921**	BOUND	THRU	**240**	IN ...	**944**
	RIGHT	**123**	OUT ...	**525**		RIGHT	**124**	OUT ...	**1,321**
SOUTH	LEFT	**13**	NORTH LEG		SOUTH	LEFT	**32**	NORTH LEG	
BOUND	THRU	**201**	IN ...	**417**	BOUND	THRU	**464**	IN ...	**838**
	RIGHT	**9**	OUT ...	**589**		RIGHT	**7**	OUT ...	**699**
EAST	LEFT	**2**	WEST LEG		EAST	LEFT	**4**	WEST LEG	
BOUND	THRU	**10**	IN ...	**58**	BOUND	THRU	**44**	IN ...	**446**
	RIGHT	**38**	OUT ...	**324**		RIGHT	**166**	OUT ...	**148**
WEST	LEFT	**37**	EAST LEG		WEST	LEFT	**157**	EAST LEG	
BOUND	THRU	**68**	IN ...	**277**	BOUND	THRU	**38**	IN ...	**405**
	RIGHT	**27**	OUT ...	**233**		RIGHT	**30**	OUT ...	**468**

YEAR 2030 INDIVIDUAL TURN VOLUME GROWTH REVIEW

WEEKDAY AM PEAK HOUR RESULTS						WEEKDAY PM PEAK HOUR RESULTS					
APPROACH	TURNING MOVEMENT	BASE YEAR COUNT	FUTURE YEAR FORECAST	DIFF ERENCE	% CHANGE	APPROACH	TURNING MOVEMENT	BASE YEAR COUNT	FUTURE YEAR FORECAST	DIFF ERENCE	% CHANGE
NORTH	LEFT	**190**	**198**	8	4%	NORTH	LEFT	**66**	**83**	17	26%
BOUND	THRU	**357**	**523**	166	46%	BOUND	THRU	**240**	**600**	360	150%
	RIGHT	**123**	**197**	74	60%		RIGHT	**124**	**269**	145	117%
	NB TOTAL	**670**	**918**	248	37%		NB TOTAL	**430**	**951**	521	121%
SOUTH	LEFT	**13**	**24**	11	88%	SOUTH	LEFT	**32**	**77**	45	140%
BOUND	THRU	**201**	**383**	182	91%	BOUND	THRU	**464**	**748**	284	61%
	RIGHT	**9**	**11**	2	22%		RIGHT	**7**	**10**	3	40%
	SB TOTAL	**223**	**418**	195	88%		SB TOTAL	**503**	**835**	332	66%
EAST	LEFT	**2**	**2**	0	5%	EAST	LEFT	**4**	**13**	9	221%
BOUND	THRU	**10**	**12**	2	15%	BOUND	THRU	**44**	**122**	78	178%
	RIGHT	**38**	**44**	6	17%		RIGHT	**166**	**310**	144	87%
	EB TOTAL	**50**	**58**	8	16%		EB TOTAL	**214**	**445**	231	108%
WEST	LEFT	**37**	**98**	61	164%	WEST	LEFT	**157**	**263**	106	68%
BOUND	THRU	**68**	**115**	47	69%	BOUND	THRU	**38**	**55**	17	45%
	RIGHT	**27**	**64**	37	138%		RIGHT	**30**	**87**	57	188%
	WB TOTAL	**132**	**277**	145	110%		WB TOTAL	**225**	**405**	180	80%
TOTAL ENTERING VOLUME		**1,075**	**1,671**	596	55%	TOTAL ENTERING VOLUME		**1,372**	**2,636**	1,264	92%

FORECAST PEAK HOUR TO ADT COMPARISON

		VOLUMES		PERCENT OF ADT		
		AM	PM	AM	PM	ADT
North Leg	Inbound	418	835			
North Leg	Outbound	589	699			
North Leg	**TOTAL**	**1,007**	**1,534**	**#DIV/0!**	**#DIV/0!**	**-**
South Leg	Inbound	918	951			
South Leg	Outbound	525	1,321			
South Leg	**TOTAL**	**1,443**	**2,272**	**#DIV/0!**	**#DIV/0!**	**-**
East Leg	Inbound	277	405			
East Leg	Outbound	233	468			
East Leg	**TOTAL**	**510**	**873**	**#DIV/0!**	**#DIV/0!**	**-**
West Leg	Inbound	58	445			
West Leg	Outbound	324	148			
West Leg	**TOTAL**	**382**	**593**	**#DIV/0!**	**#DIV/0!**	**-**
OVERALL TOTAL		3,342	***5,272***	**#DIV/0!**	**#DIV/0!**	**-**

U:\UcJobs_08100-08500_08100\08139\Post-Processing\[California_Lugonia.xls]2030 OUTPUT

Modified by: COMSIS Corp. (M. Roskin) 4/8/86

Modified by: FHWA 12/21/87

Nevada Street / Lugonia Avenue

FUTURE DIRECTIONAL TURN VOLUMES FROM FUTURE DIRECTIONAL LINK VOLUMES

NCHRP 255, PAGE 105 Written by: FHWA (C. Fleet)

YEAR 2030 TRAFFIC CONDITIONS					YEAR 2030 TRAFFIC CONDITIONS				
WEEKDAY AM PEAK HOUR INPUT DATA					WEEKDAY PM PEAK HOUR INPUT DATA				
APPROACH	TURNING MOVEMENT	BASE YEAR COUNT	APPROACH	FUTURE YEAR TOTAL	APPROACH	TURNING MOVEMENT	BASE YEAR COUNT	APPROACH	FUTURE YEAR TOTAL
NORTH	LEFT	**34**	SOUTH LEG		NORTH	LEFT	**18**	SOUTH LEG	
BOUND	THRU	**82**	IN ...	**151**	BOUND	THRU	**167**	IN ...	**573**
	RIGHT	**26**	OUT ...	**366**		RIGHT	**167**	OUT ...	**390**
SOUTH	LEFT	**8**	NORTH LEG		SOUTH	LEFT	**21**	NORTH LEG	
BOUND	THRU	**122**	IN ...	**177**	BOUND	THRU	**132**	IN ...	**243**
	RIGHT	**13**	OUT ...	**126**		RIGHT	**5**	OUT ...	**333**
EAST	LEFT	**12**	WEST LEG		EAST	LEFT	**23**	WEST LEG	
BOUND	THRU	**50**	IN ...	**116**	BOUND	THRU	**191**	IN ...	**481**
	RIGHT	**30**	OUT ...	**271**		RIGHT	**47**	OUT ...	**260**
WEST	LEFT	**89**	EAST LEG		WEST	LEFT	**119**	EAST LEG	
BOUND	THRU	**120**	IN ...	**409**	BOUND	THRU	**155**	IN ...	**337**
	RIGHT	**11**	OUT ...	**89**		RIGHT	**9**	OUT ...	**648**

YEAR 2030 INDIVIDUAL TURN VOLUME GROWTH REVIEW

WEEKDAY AM PEAK HOUR RESULTS						WEEKDAY PM PEAK HOUR RESULTS					
APPROACH	TURNING MOVEMENT	BASE YEAR COUNT	FUTURE YEAR FORECAST	DIFF ERENCE	% CHANGE	APPROACH	TURNING MOVEMENT	BASE YEAR COUNT	FUTURE YEAR FORECAST	DIFF ERENCE	% CHANGE
NORTH	LEFT	**34**	**37**	3	9%	NORTH	LEFT	**18**	**36**	18	102%
BOUND	THRU	**82**	**90**	8	9%	BOUND	THRU	**167**	**277**	110	66%
	RIGHT	**26**	**29**	3	10%		RIGHT	**167**	**258**	91	55%
	NB TOTAL	**142**	**155**	13	9%		NB TOTAL	**352**	**572**	220	62%
SOUTH	LEFT	**8**	**8**	0	1%	SOUTH	LEFT	**21**	**35**	14	65%
BOUND	THRU	**122**	**153**	31	26%	BOUND	THRU	**132**	**197**	65	49%
	RIGHT	**13**	**16**	3	20%		RIGHT	**5**	**11**	6	115%
	SB TOTAL	**143**	**177**	34	24%		SB TOTAL	**158**	**243**	85	54%
EAST	LEFT	**12**	**16**	4	35%	EAST	LEFT	**23**	**46**	23	99%
BOUND	THRU	**50**	**57**	7	14%	BOUND	THRU	**191**	**355**	164	86%
	RIGHT	**30**	**43**	13	42%		RIGHT	**47**	**79**	32	68%
	EB TOTAL	**92**	**116**	24	26%		EB TOTAL	**261**	**480**	219	84%
WEST	LEFT	**89**	**170**	81	91%	WEST	LEFT	**119**	**131**	12	10%
BOUND	THRU	**120**	**218**	98	82%	BOUND	THRU	**155**	**213**	58	37%
	RIGHT	**11**	**20**	9	82%		RIGHT	**9**	**10**	1	13%
	WB TOTAL	**220**	**409**	189	86%		WB TOTAL	**283**	**354**	71	25%
TOTAL ENTERING VOLUME		**597**	**857**	260	43%	TOTAL ENTERING VOLUME		**1,054**	**1,648**	594	56%

FORECAST PEAK HOUR TO ADT COMPARISON

		VOLUMES		PERCENT OF ADT		
		AM	PM	AM	PM	ADT
North Leg	Inbound	177	243			
North Leg	Outbound	126	333			
North Leg	**TOTAL**	**303**	**576**	**#DIV/0!**	**#DIV/0!**	**-**
South Leg	Inbound	155	572			
South Leg	Outbound	366	407			
South Leg	**TOTAL**	**521**	**979**	**#DIV/0!**	**#DIV/0!**	**-**
East Leg	Inbound	409	354			
East Leg	Outbound	94	648			
East Leg	**TOTAL**	**502**	**1,002**	**#DIV/0!**	**#DIV/0!**	**-**
West Leg	Inbound	116	480			
West Leg	Outbound	271	260			
West Leg	**TOTAL**	**387**	**740**	**#DIV/0!**	**#DIV/0!**	**-**
OVERALL TOTAL		1,713	***3,297***	**#DIV/0!**	**#DIV/0!**	**-**

U:\UcJobs_08100-08500_08100\08139\Post-Processing\[Nevada_Lugonia.xls]2030 OUTPUT

Modified by: COMSIS Corp. (M. Roskin) 4/8/86

Modified by: FHWA 12/21/87

Alabama Street / Lugonia Avenue

FUTURE DIRECTIONAL TURN VOLUMES FROM FUTURE DIRECTIONAL LINK VOLUMES

NCHRP 255, PAGE 105 Written by: FHWA (C. Fleet)

YEAR 2030 TRAFFIC CONDITIONS					YEAR 2030 TRAFFIC CONDITIONS				
WEEKDAY AM PEAK HOUR INPUT DATA					WEEKDAY PM PEAK HOUR INPUT DATA				
APPROACH	TURNING MOVEMENT	BASE YEAR COUNT	APPROACH	FUTURE YEAR TOTAL	APPROACH	TURNING MOVEMENT	BASE YEAR COUNT	APPROACH	FUTURE YEAR TOTAL
NORTH	LEFT	**87**	SOUTH LEG		NORTH	LEFT	**116**	SOUTH LEG	
BOUND	THRU	**284**	IN ...	**1,068**	BOUND	THRU	**593**	IN ...	**1,166**
	RIGHT	**141**	OUT ...	**484**		RIGHT	**370**	OUT ...	**984**
SOUTH	LEFT	**43**	NORTH LEG		SOUTH	LEFT	**134**	NORTH LEG	
BOUND	THRU	**335**	IN ...	**645**	BOUND	THRU	**475**	IN ...	**722**
	RIGHT	**57**	OUT ...	**881**		RIGHT	**21**	OUT ...	**859**
EAST	LEFT	**42**	WEST LEG		EAST	LEFT	**130**	WEST LEG	
BOUND	THRU	**80**	IN ...	**162**	BOUND	THRU	**309**	IN ...	**584**
	RIGHT	**35**	OUT ...	**536**		RIGHT	**70**	OUT ...	**415**
WEST	LEFT	**159**	EAST LEG		WEST	LEFT	**342**	EAST LEG	
BOUND	THRU	**203**	IN ...	**328**	BOUND	THRU	**263**	IN ...	**674**
	RIGHT	**30**	OUT ...	**300**		RIGHT	**42**	OUT ...	**889**

YEAR 2030 INDIVIDUAL TURN VOLUME GROWTH REVIEW

WEEKDAY AM PEAK HOUR RESULTS						WEEKDAY PM PEAK HOUR RESULTS					
APPROACH	TURNING MOVEMENT	BASE YEAR COUNT	FUTURE YEAR FORECAST	DIFF ERENCE	% CHANGE	APPROACH	TURNING MOVEMENT	BASE YEAR COUNT	FUTURE YEAR FORECAST	DIFF ERENCE	% CHANGE
NORTH	LEFT	**87**	**159**	72	82%	NORTH	LEFT	**116**	**121**	5	4%
BOUND	THRU	**284**	**756**	472	166%	BOUND	THRU	**593**	**658**	65	11%
	RIGHT	**141**	**159**	18	13%		RIGHT	**370**	**388**	18	5%
	NB TOTAL	**512**	**1,073**	561	110%		NB TOTAL	**1,079**	**1,167**	88	8%
SOUTH	LEFT	**43**	**77**	34	79%	SOUTH	LEFT	**134**	**152**	18	14%
BOUND	THRU	**335**	**397**	62	19%	BOUND	THRU	**475**	**546**	71	15%
	RIGHT	**57**	**165**	108	189%		RIGHT	**21**	**24**	3	13%
	SB TOTAL	**435**	**639**	204	47%		SB TOTAL	**630**	**722**	92	15%
EAST	LEFT	**42**	**80**	38	90%	EAST	LEFT	**130**	**155**	25	19%
BOUND	THRU	**80**	**88**	8	10%	BOUND	THRU	**309**	**349**	40	13%
	RIGHT	**35**	**39**	4	10%		RIGHT	**70**	**80**	10	14%
	EB TOTAL	**157**	**206**	49	31%		EB TOTAL	**509**	**584**	75	15%
WEST	LEFT	**159**	**175**	16	10%	WEST	LEFT	**342**	**358**	16	5%
BOUND	THRU	**203**	**212**	9	5%	BOUND	THRU	**263**	**270**	7	3%
	RIGHT	**30**	**46**	16	53%		RIGHT	**42**	**46**	4	9%
	WB TOTAL	**392**	**433**	41	10%		WB TOTAL	**647**	**674**	27	4%
TOTAL ENTERING VOLUME		**1,496**	**2,351**	855	57%	TOTAL ENTERING VOLUME		**2,865**	**3,147**	282	10%

FORECAST PEAK HOUR TO ADT COMPARISON

		VOLUMES		PERCENT OF ADT		
		AM	PM	AM	PM	ADT
North Leg	Inbound	639	722			
North Leg	Outbound	881	859			
North Leg	**TOTAL**	**1,520**	**1,581**	**8%**	**9%**	**18,260**
South Leg	Inbound	1,073	1,167			
South Leg	Outbound	611	984			
South Leg	**TOTAL**	**1,684**	**2,151**	**6%**	**8%**	**26,730**
East Leg	Inbound	433	674			
East Leg	Outbound	324	889			
East Leg	**TOTAL**	**757**	**1,563**	**4%**	**8%**	**19,140**
West Leg	Inbound	206	584			
West Leg	Outbound	536	415			
West Leg	**TOTAL**	**742**	**999**	**6%**	**9%**	**11,550**
OVERALL TOTAL		4,703	***6,294***	**6%**	**8%**	***75,680***

U:\UcJobs_08100-08500_08100\08139\Post-Processing\[Alabama_Lugonia.xls]2030 OUTPUT

Modified by: COMSIS Corp. (M. Roskin) 4/8/86

Modified by: FHWA 12/21/87

Alabama Street / I-10 Westbound Ramps

FUTURE DIRECTIONAL TURN VOLUMES FROM FUTURE DIRECTIONAL LINK VOLUMES

NCHRP 255, PAGE 105 Written by: FHWA (C. Fleet)

YEAR 2030 TRAFFIC CONDITIONS					YEAR 2030 TRAFFIC CONDITIONS				
WEEKDAY AM PEAK HOUR INPUT DATA					WEEKDAY PM PEAK HOUR INPUT DATA				
APPROACH	TURNING MOVEMENT	BASE YEAR COUNT	APPROACH	FUTURE YEAR TOTAL	APPROACH	TURNING MOVEMENT	BASE YEAR COUNT	APPROACH	FUTURE YEAR TOTAL
NORTH	LEFT	**347**	SOUTH LEG		NORTH	LEFT	**376**	SOUTH LEG	
BOUND	THRU	**458**	IN ...	**1,142**	BOUND	THRU	**1,105**	IN ...	**1,575**
	RIGHT	**0**	OUT ...	**844**		RIGHT	**0**	OUT ...	**1,031**
SOUTH	LEFT	**0**	NORTH LEG		SOUTH	LEFT	**0**	NORTH LEG	
BOUND	THRU	**334**	IN ...	**454**	BOUND	THRU	**765**	IN ...	**1,182**
	RIGHT	**156**	OUT ...	**1,305**		RIGHT	**307**	OUT ...	**1,364**
EAST	LEFT	**0**	WEST LEG		EAST	LEFT	**0**	WEST LEG	
BOUND	THRU	**0**	IN ...	**0**	BOUND	THRU	**0**	IN ...	**0**
	RIGHT	**0**	OUT ...	**776**		RIGHT	**0**	OUT ...	**1,062**
WEST	LEFT	**244**	EAST LEG		WEST	LEFT	**164**	EAST LEG	
BOUND	THRU	**295**	IN ...	**1,330**	BOUND	THRU	**316**	IN ...	**699**
	RIGHT	**262**	OUT ...	**0**		RIGHT	**166**	OUT ...	**0**

YEAR 2030 INDIVIDUAL TURN VOLUME GROWTH REVIEW

WEEKDAY AM PEAK HOUR RESULTS						WEEKDAY PM PEAK HOUR RESULTS					
APPROACH	TURNING MOVEMENT	BASE YEAR COUNT	FUTURE YEAR FORECAST	DIFF ERENCE	% CHANGE	APPROACH	TURNING MOVEMENT	BASE YEAR COUNT	FUTURE YEAR FORECAST	DIFF ERENCE	% CHANGE
NORTH	LEFT	**347**	**348**	1	0%	NORTH	LEFT	**376**	**393**	17	5%
BOUND	THRU	**458**	**794**	336	73%	BOUND	THRU	**1,105**	**1,182**	77	7%
	RIGHT	**0**	**0**	0	#DIV/0!		RIGHT	**0**	**0**	0	#DIV/0!
	NB TOTAL	**805**	**1,142**	337	42%		NB TOTAL	**1,481**	**1,575**	94	6%
SOUTH	LEFT	**0**	**0**	0	#DIV/0!	SOUTH	LEFT	**0**	**0**	0	#DIV/0!
BOUND	THRU	**334**	**359**	25	7%	BOUND	THRU	**765**	**851**	86	11%
	RIGHT	**156**	**172**	16	10%		RIGHT	**307**	**332**	25	8%
	SB TOTAL	**490**	**530**	40	8%		SB TOTAL	**1,072**	**1,182**	110	10%
EAST	LEFT	**0**	**0**	0	#DIV/0!	EAST	LEFT	**0**	**0**	0	#DIV/0!
BOUND	THRU	**0**	**0**	0	#DIV/0!	BOUND	THRU	**0**	**0**	0	#DIV/0!
	RIGHT	**0**	**0**	0	#DIV/0!		RIGHT	**0**	**0**	0	#DIV/0!
	EB TOTAL	**0**	**0**	0	#DIV/0!		EB TOTAL	**0**	**0**	0	#DIV/0!
WEST	LEFT	**244**	**485**	241	99%	WEST	LEFT	**164**	**180**	16	10%
BOUND	THRU	**295**	**333**	38	13%	BOUND	THRU	**316**	**337**	21	7%
	RIGHT	**262**	**511**	249	95%		RIGHT	**166**	**182**	16	9%
	WB TOTAL	**801**	**1,330**	529	66%		WB TOTAL	**646**	**699**	53	8%
TOTAL ENTERING VOLUME		**2,096**	**3,001**	905	43%	TOTAL ENTERING VOLUME		**3,199**	**3,457**	258	8%

FORECAST PEAK HOUR TO ADT COMPARISON

		VOLUMES		PERCENT OF ADT		
		AM	PM	AM	PM	ADT
North Leg	Inbound	530	1,182			
North Leg	Outbound	1,305	1,364			
North Leg	**TOTAL**	**1,835**	**2,546**	**7%**	**10%**	**26,730**
South Leg	Inbound	1,142	1,575			
South Leg	Outbound	844	1,031			
South Leg	**TOTAL**	**1,986**	**2,606**	**7%**	**9%**	**28,820**
East Leg	Inbound	1,330	699			
East Leg	Outbound	0	0			
East Leg	**TOTAL**	**1,330**	**699**	**16%**	**8%**	**8,250**
West Leg	Inbound	0	0			
West Leg	Outbound	852	1,062			
West Leg	**TOTAL**	**852**	**1,062**	**5%**	**6%**	**17,105**
OVERALL TOTAL		6,003	***6,914***	**7%**	**9%**	***80,905***

U:\UcJobs_08100-08500_08100\08139\Post-Processing\[Alabama_I-10WB.xls]2030 OUTPUT

Modified by: COMSIS Corp. (M. Roskin) 4/8/86

Modified by: FHWA 12/21/87

Alabama Street / I-10 Eastbound Ramps

FUTURE DIRECTIONAL TURN VOLUMES FROM FUTURE DIRECTIONAL LINK VOLUMES

NCHRP 255, PAGE 105 Written by: FHWA (C. Fleet)

YEAR 2030 TRAFFIC CONDITIONS					YEAR 2030 TRAFFIC CONDITIONS				
WEEKDAY AM PEAK HOUR INPUT DATA					WEEKDAY PM PEAK HOUR INPUT DATA				
APPROACH	TURNING MOVEMENT	BASE YEAR COUNT	APPROACH	FUTURE YEAR TOTAL	APPROACH	TURNING MOVEMENT	BASE YEAR COUNT	APPROACH	FUTURE YEAR TOTAL
NORTH	LEFT	**0**	SOUTH LEG		NORTH	LEFT	**0**	SOUTH LEG	
BOUND	THRU	**593**	IN ...	**940**	BOUND	THRU	**1,021**	IN ...	**1,373**
	RIGHT	**123**	OUT ...	**1,284**		RIGHT	**269**	OUT ...	**1,209**
SOUTH	LEFT	**49**	NORTH LEG		SOUTH	LEFT	**211**	NORTH LEG	
BOUND	THRU	**547**	IN ...	**862**	BOUND	THRU	**720**	IN ...	**1,033**
	RIGHT	**0**	OUT ...	**1,142**		RIGHT	**0**	OUT ...	**1,575**
EAST	LEFT	**212**	WEST LEG		EAST	LEFT	**460**	WEST LEG	
BOUND	THRU	**1**	IN ...	**796**	BOUND	THRU	**4**	IN ...	**869**
	RIGHT	**373**	OUT ...	**0**		RIGHT	**422**	OUT ...	**0**
WEST	LEFT	**0**	EAST LEG		WEST	LEFT	**0**	EAST LEG	
BOUND	THRU	**0**	IN ...	**0**	BOUND	THRU	**0**	IN ...	**0**
	RIGHT	**0**	OUT ...	**173**		RIGHT	**0**	OUT ...	**490**

YEAR 2030 INDIVIDUAL TURN VOLUME GROWTH REVIEW

WEEKDAY AM PEAK HOUR RESULTS						WEEKDAY PM PEAK HOUR RESULTS					
APPROACH	TURNING MOVEMENT	BASE YEAR COUNT	FUTURE YEAR FORECAST	DIFF ERENCE	% CHANGE	APPROACH	TURNING MOVEMENT	BASE YEAR COUNT	FUTURE YEAR FORECAST	DIFF ERENCE	% CHANGE
NORTH	LEFT	**0**	**0**	0	#DIV/0!	NORTH	LEFT	**0**	**0**	0	#DIV/0!
BOUND	THRU	**593**	**826**	233	39%	BOUND	THRU	**1,021**	**1,111**	90	9%
	RIGHT	**123**	**135**	12	10%		RIGHT	**269**	**296**	27	10%
	NB TOTAL	**716**	**961**	245	34%		NB TOTAL	**1,290**	**1,407**	117	9%
SOUTH	LEFT	**49**	**56**	7	15%	SOUTH	LEFT	**211**	**225**	14	6%
BOUND	THRU	**547**	**805**	258	47%	BOUND	THRU	**720**	**808**	88	12%
	RIGHT	**0**	**0**	0	#DIV/0!		RIGHT	**0**	**0**	0	#DIV/0!
	SB TOTAL	**596**	**861**	265	45%		SB TOTAL	**931**	**1,032**	101	11%
EAST	LEFT	**212**	**316**	104	49%	EAST	LEFT	**460**	**464**	4	1%
BOUND	THRU	**1**	**1**	0	1%	BOUND	THRU	**4**	**4**	0	10%
	RIGHT	**373**	**479**	106	28%		RIGHT	**422**	**464**	42	10%
	EB TOTAL	**586**	**796**	210	36%		EB TOTAL	**886**	**932**	46	5%
WEST	LEFT	**0**	**0**	0	#DIV/0!	WEST	LEFT	**0**	**0**	0	#DIV/0!
BOUND	THRU	**0**	**0**	0	#DIV/0!	BOUND	THRU	**0**	**0**	0	#DIV/0!
	RIGHT	**0**	**0**	0	#DIV/0!		RIGHT	**0**	**0**	0	#DIV/0!
	WB TOTAL	**0**	**0**	0	#DIV/0!		WB TOTAL	**0**	**0**	0	#DIV/0!
TOTAL ENTERING VOLUME		**1,898**	**2,619**	721	38%	TOTAL ENTERING VOLUME		**3,107**	**3,372**	265	9%

FORECAST PEAK HOUR TO ADT COMPARISON						
		VOLUMES		PERCENT OF ADT		
		AM	PM	AM	PM	ADT
North Leg	Inbound	861	1,032			
North Leg	Outbound	1,142	1,575			
North Leg	**TOTAL**	**2,003**	**2,607**	**7%**	**9%**	**28,820**
South Leg	Inbound	961	1,407			
South Leg	Outbound	1,284	1,272			
South Leg	**TOTAL**	**2,245**	**2,679**	**7%**	**8%**	**32,917**
East Leg	Inbound	0	0			
East Leg	Outbound	193	525			
East Leg	**TOTAL**	**193**	**525**	**3%**	**9%**	**5,720**
West Leg	Inbound	796	932			
West Leg	Outbound	0	0			
West Leg	**TOTAL**	**796**	**932**	**8%**	**9%**	**10,340**
OVERALL TOTAL		5,237	***6,744***	**7%**	**9%**	***77,797***

U:\UcJobs_08100-08500_08100\08139\Post-Processing\[Alabama_I-10EB.xls]2030 OUTPUT

Modified by: COMSIS Corp. (M. Roskin) 4/8/86

Modified by: FHWA 12/21/87

Alabama Street / Redlands Boulevard

FUTURE DIRECTIONAL TURN VOLUMES FROM FUTURE DIRECTIONAL LINK VOLUMES

NCHRP 255, PAGE 105 Written by: FHWA (C. Fleet)

YEAR 2030 TRAFFIC CONDITIONS					YEAR 2030 TRAFFIC CONDITIONS				
WEEKDAY AM PEAK HOUR INPUT DATA					WEEKDAY PM PEAK HOUR INPUT DATA				
APPROACH	TURNING MOVEMENT	BASE YEAR COUNT	APPROACH	FUTURE YEAR TOTAL	APPROACH	TURNING MOVEMENT	BASE YEAR COUNT	APPROACH	FUTURE YEAR TOTAL
NORTH	LEFT	**69**	SOUTH LEG		NORTH	LEFT	**67**	SOUTH LEG	
BOUND	THRU	**460**	IN ...	**450**	BOUND	THRU	**525**	IN ...	**657**
	RIGHT	**40**	OUT ...	**526**		RIGHT	**77**	OUT ...	**681**
SOUTH	LEFT	**84**	NORTH LEG		SOUTH	LEFT	**127**	NORTH LEG	
BOUND	THRU	**459**	IN ...	**921**	BOUND	THRU	**537**	IN ...	**798**
	RIGHT	**160**	OUT ...	**840**		RIGHT	**104**	OUT ...	**995**
EAST	LEFT	**106**	WEST LEG		EAST	LEFT	**273**	WEST LEG	
BOUND	THRU	**164**	IN ...	**375**	BOUND	THRU	**530**	IN ...	**953**
	RIGHT	**30**	OUT ...	**788**		RIGHT	**78**	OUT ...	**607**
WEST	LEFT	**43**	EAST LEG		WEST	LEFT	**86**	EAST LEG	
BOUND	THRU	**278**	IN ...	**897**	BOUND	THRU	**347**	IN ...	**707**
	RIGHT	**93**	OUT ...	**491**		RIGHT	**153**	OUT ...	**831**

YEAR 2030 INDIVIDUAL TURN VOLUME GROWTH REVIEW

WEEKDAY AM PEAK HOUR RESULTS						WEEKDAY PM PEAK HOUR RESULTS					
APPROACH	TURNING MOVEMENT	BASE YEAR COUNT	FUTURE YEAR FORECAST	DIFF ERENCE	% CHANGE	APPROACH	TURNING MOVEMENT	BASE YEAR COUNT	FUTURE YEAR FORECAST	DIFF ERENCE	% CHANGE
NORTH	LEFT	**69**	**76**	7	10%	NORTH	LEFT	**67**	**74**	7	10%
BOUND	THRU	**460**	**506**	46	10%	BOUND	THRU	**525**	**578**	53	10%
	RIGHT	**40**	**44**	4	10%		RIGHT	**77**	**80**	3	3%
	NB TOTAL	**569**	**626**	57	10%		NB TOTAL	**669**	**731**	62	9%
SOUTH	LEFT	**84**	**232**	148	177%	SOUTH	LEFT	**127**	**157**	30	23%
BOUND	THRU	**459**	**505**	46	10%	BOUND	THRU	**537**	**591**	54	10%
	RIGHT	**160**	**232**	72	45%		RIGHT	**104**	**118**	14	14%
	SB TOTAL	**703**	**969**	266	38%		SB TOTAL	**768**	**866**	98	13%
EAST	LEFT	**106**	**137**	31	29%	EAST	LEFT	**273**	**290**	17	6%
BOUND	THRU	**164**	**223**	59	36%	BOUND	THRU	**530**	**595**	65	12%
	RIGHT	**30**	**33**	3	10%		RIGHT	**78**	**86**	8	10%
	EB TOTAL	**300**	**394**	94	31%		EB TOTAL	**881**	**970**	89	10%
WEST	LEFT	**43**	**56**	13	29%	WEST	LEFT	**86**	**90**	4	5%
BOUND	THRU	**278**	**524**	246	89%	BOUND	THRU	**347**	**425**	78	22%
	RIGHT	**93**	**318**	225	242%		RIGHT	**153**	**192**	39	25%
	WB TOTAL	**414**	**898**	484	117%		WB TOTAL	**586**	**707**	121	21%
TOTAL ENTERING VOLUME		**1,986**	**2,887**	901	45%	TOTAL ENTERING VOLUME		**2,904**	**3,273**	369	13%

FORECAST PEAK HOUR TO ADT COMPARISON

		VOLUMES		PERCENT OF ADT		
		AM	PM	AM	PM	ADT
North Leg	Inbound	969	866			
North Leg	Outbound	962	1,059			
North Leg	**TOTAL**	**1,931**	**1,925**	**7%**	**7%**	**28,380**
South Leg	Inbound	626	731			
South Leg	Outbound	593	766			
South Leg	**TOTAL**	**1,219**	**1,497**	**6%**	**7%**	**21,010**
East Leg	Inbound	898	707			
East Leg	Outbound	500	831			
East Leg	**TOTAL**	**1,398**	**1,538**	**5%**	**5%**	**27,996**
West Leg	Inbound	394	970			
West Leg	Outbound	832	617			
West Leg	**TOTAL**	**1,226**	**1,587**	**5%**	**7%**	**22,770**
OVERALL TOTAL		5,774	***6,546***	**6%**	**7%**	***100,156***

U:\UcJobs_08100-08500_08100\08139\Post-Processing\[Alabama_Redlands.xls]2030 OUTPUT

Modified by: COMSIS Corp. (M. Roskin) 4/8/86

Modified by: FHWA 12/21/87

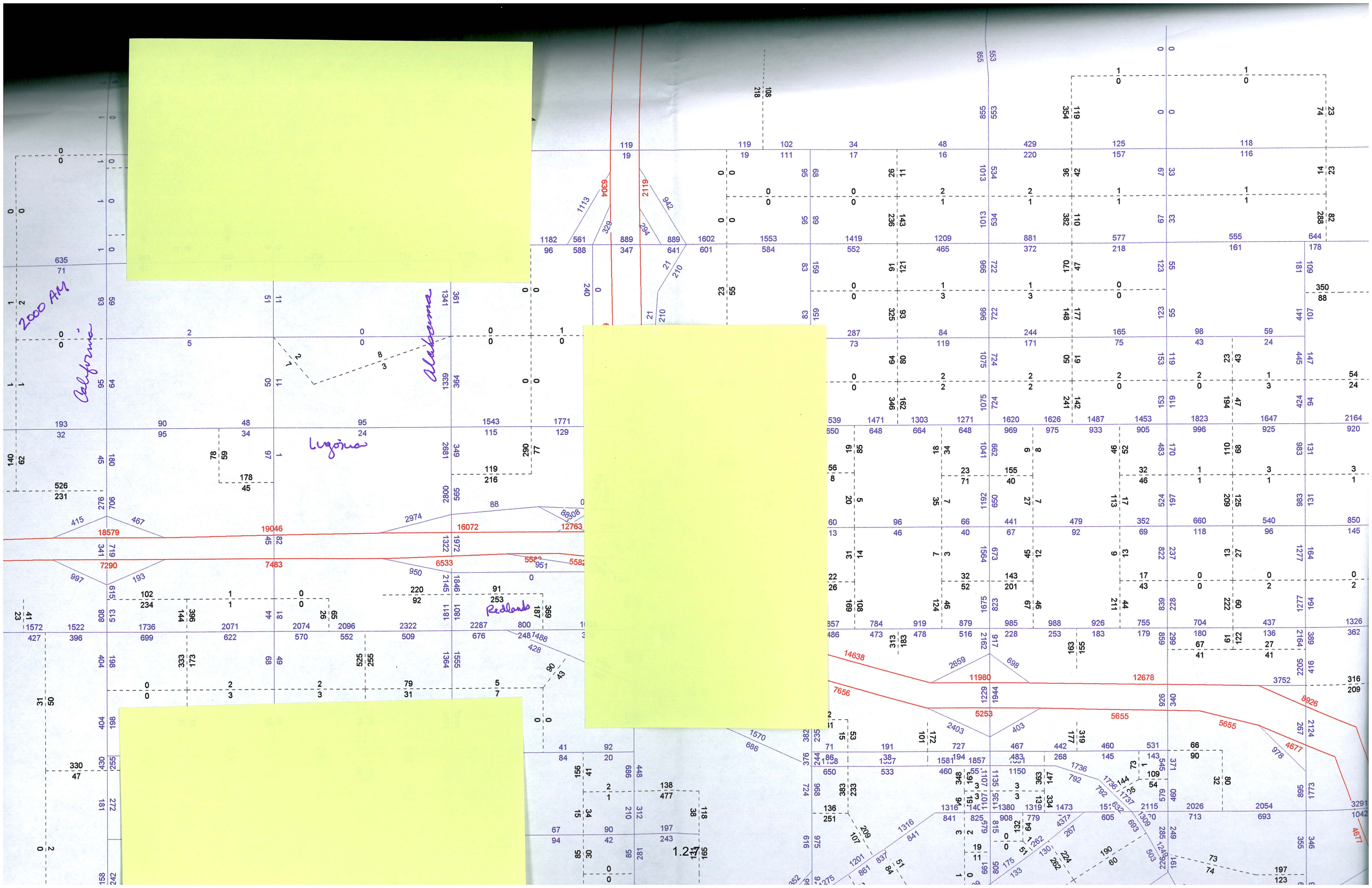
2000 AM
California
Alabama
Lugonia
Redlands

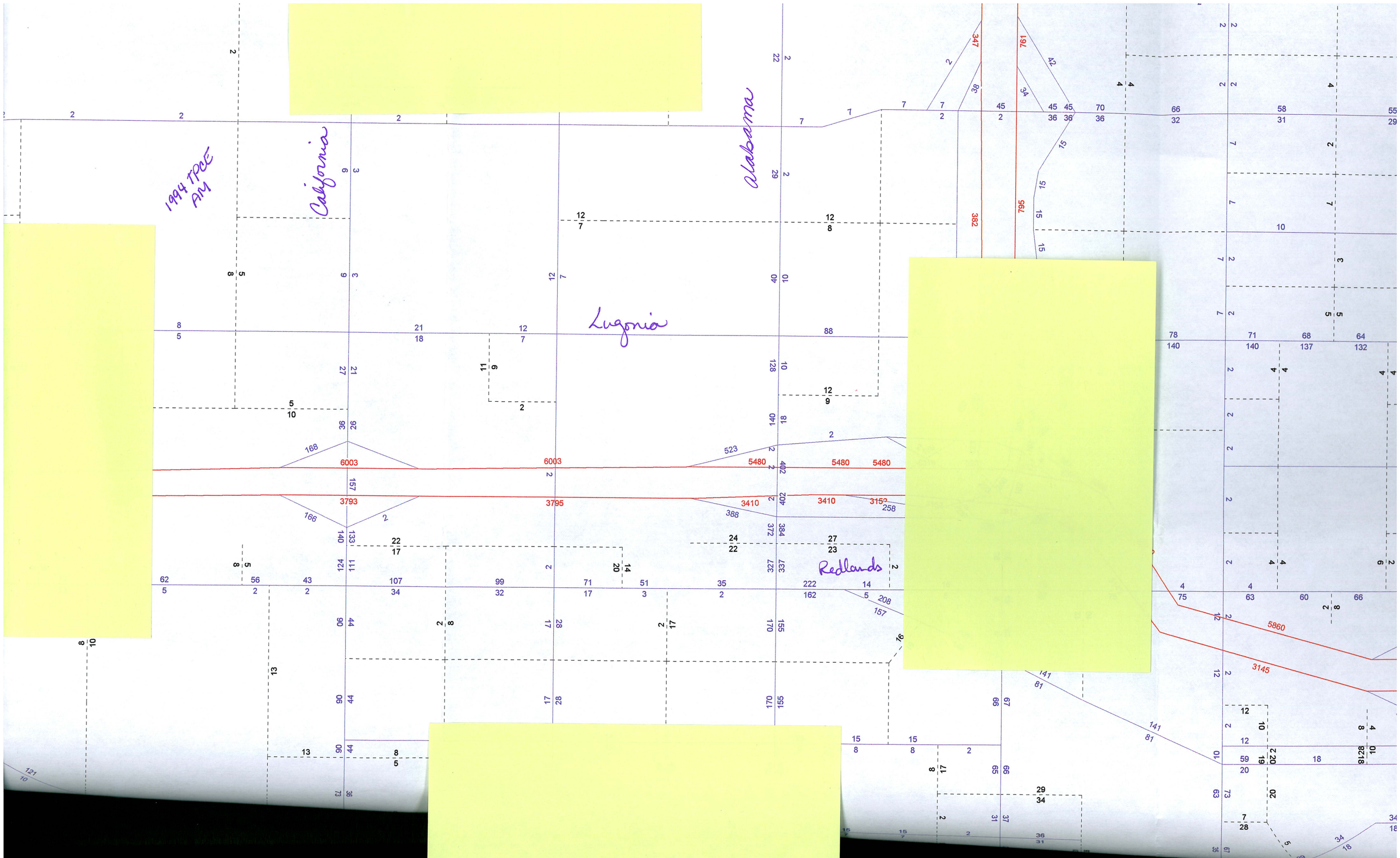
1994 TPCE
AM
California
Alabama
Lugonia
Redlands
347
761
382
795
6003
5480
3793
3795
3410
5860
3145

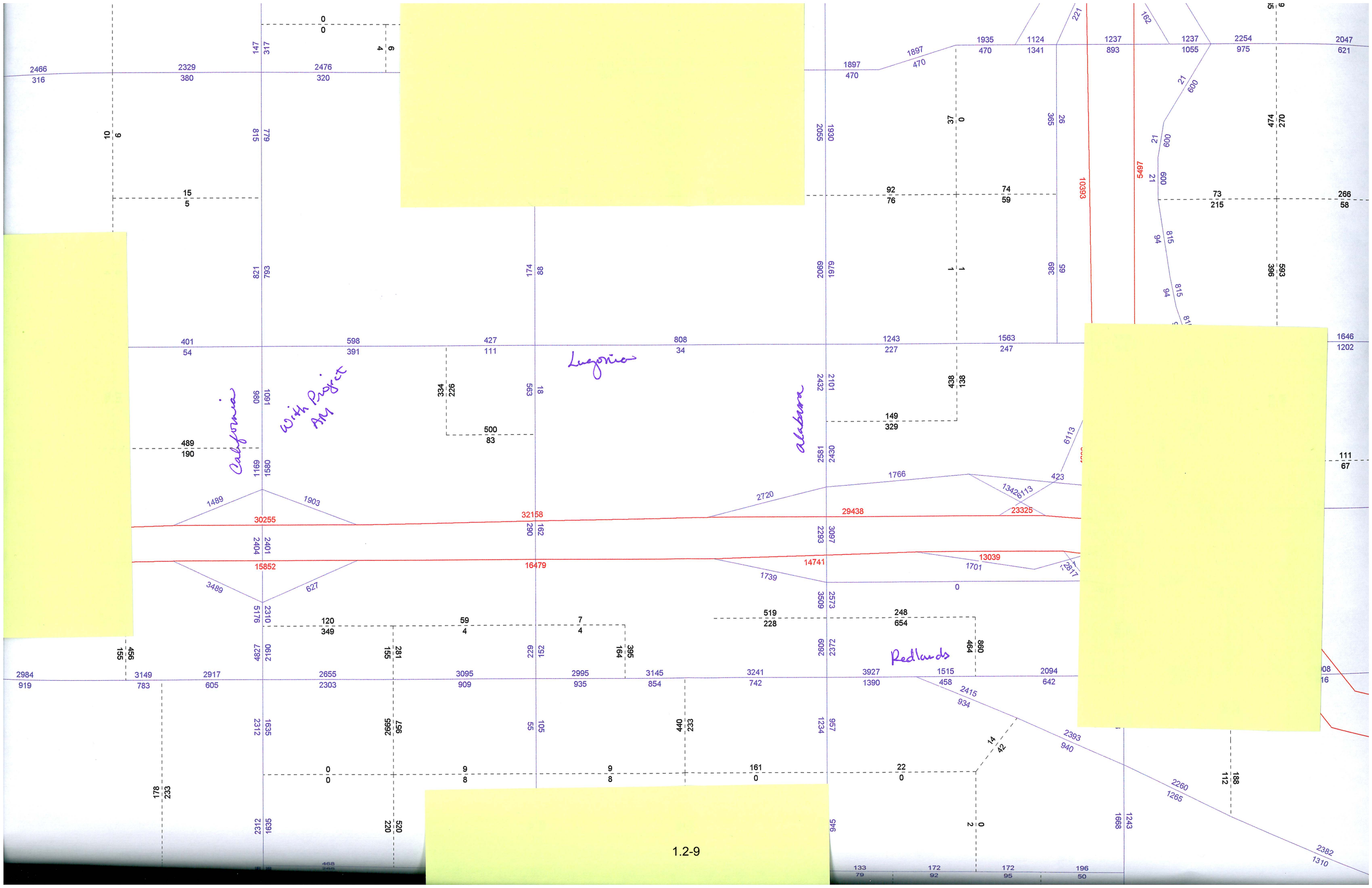
California
With Project
AM
Lugonia
Alabama
Redlands
30255
32158
29438
23325
15852
16479
14741
13039
10393
5497

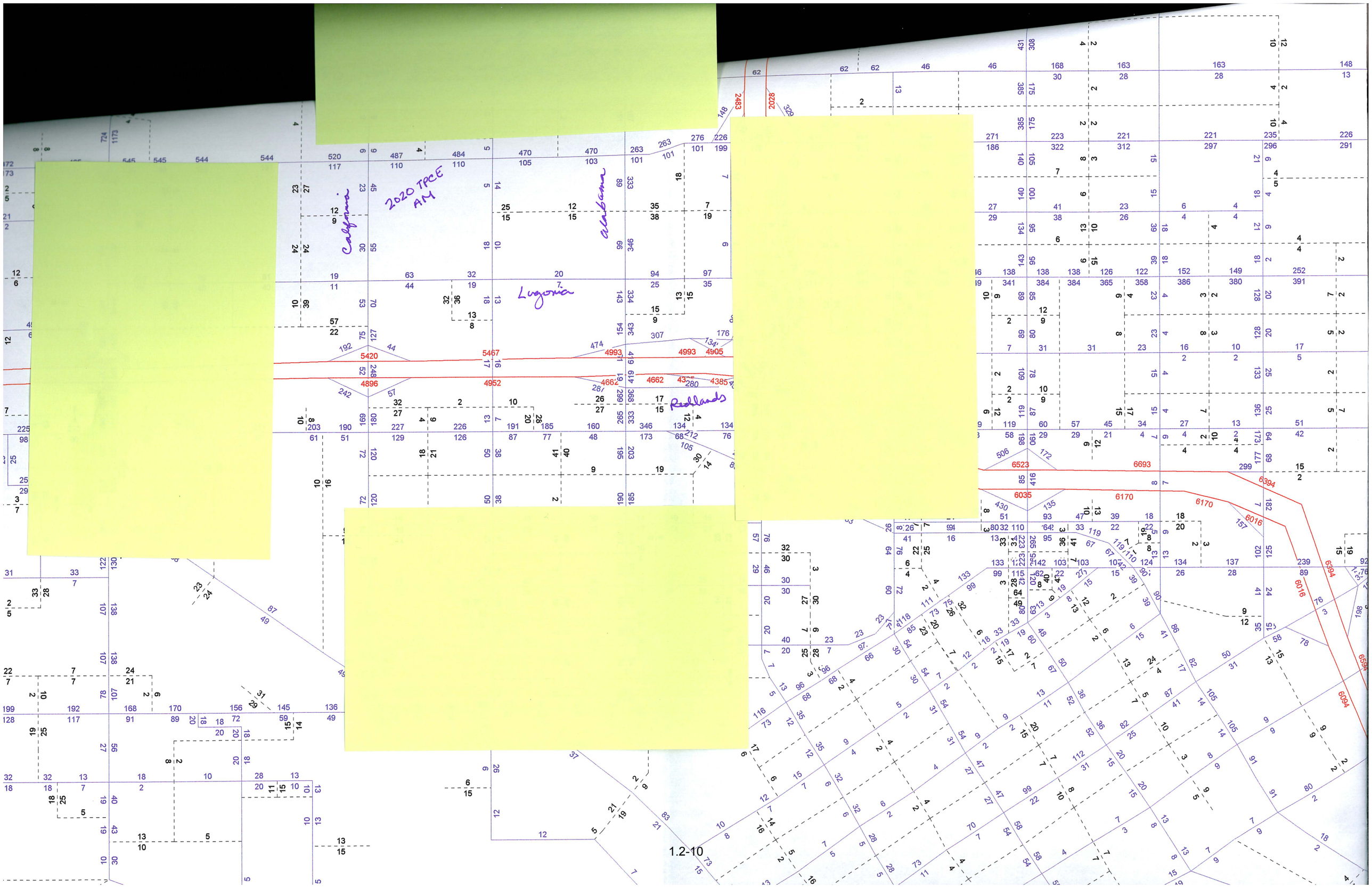
2020 TPCE
AM
California
Alabama
Lugonia
Redlands

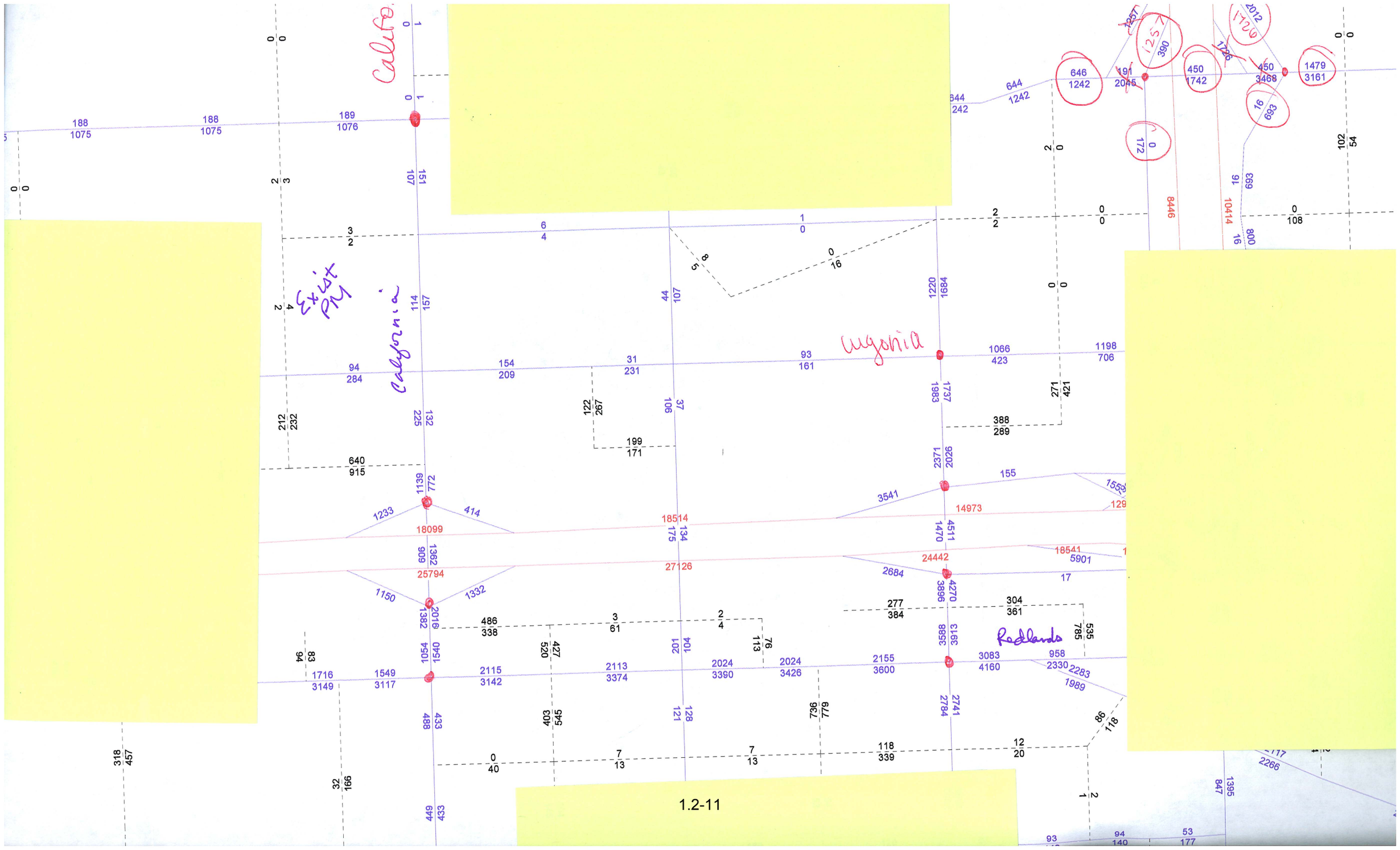
Calif.
Exist PM
California
Ingonia
Redlands

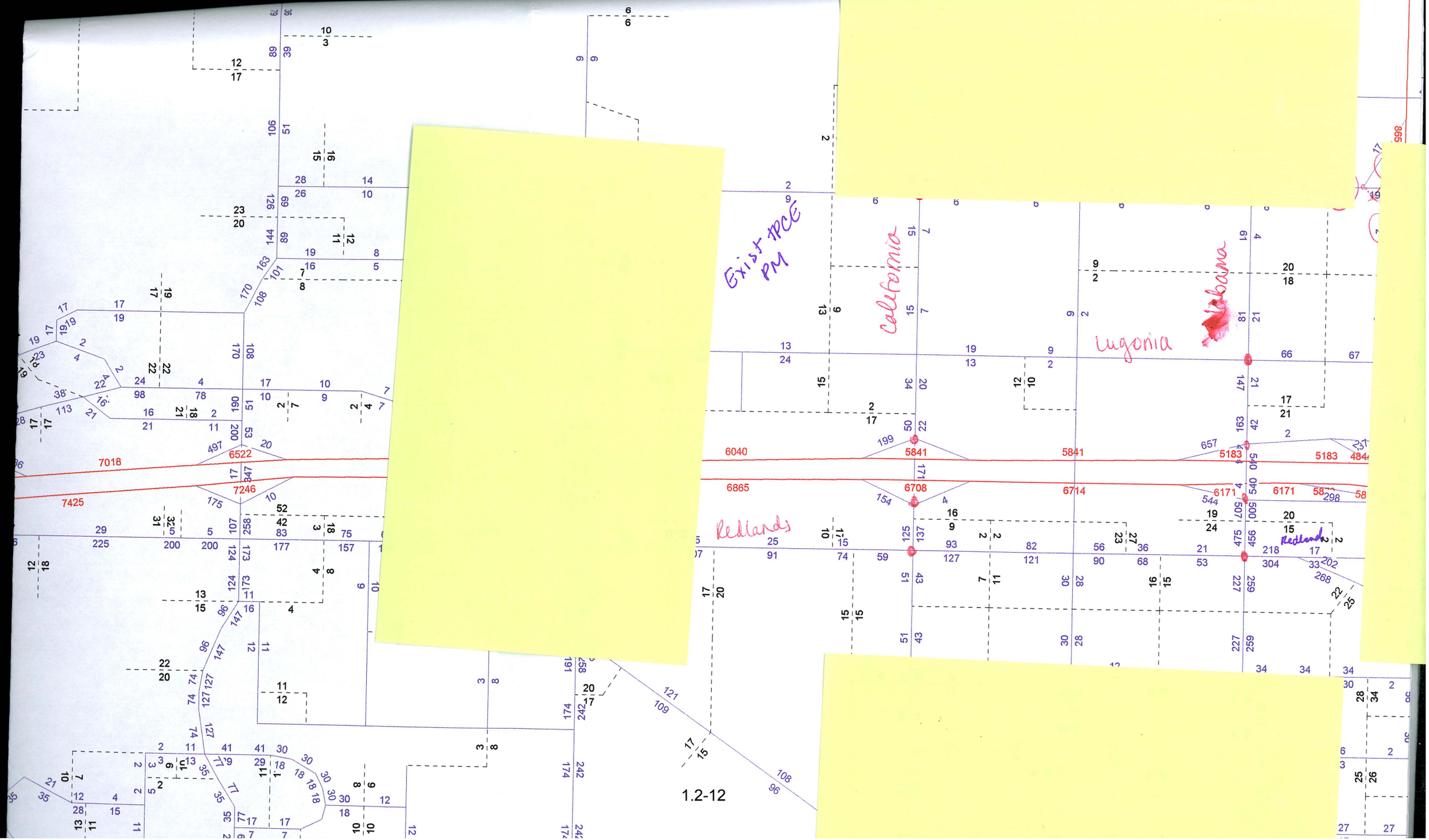
Exist TPCE
PM
California
Lugonia
Redlands
Redlands
7018
7425
6522
7246
6040
5841
5841
5183
5183
6865
6708
6714
6171
6171

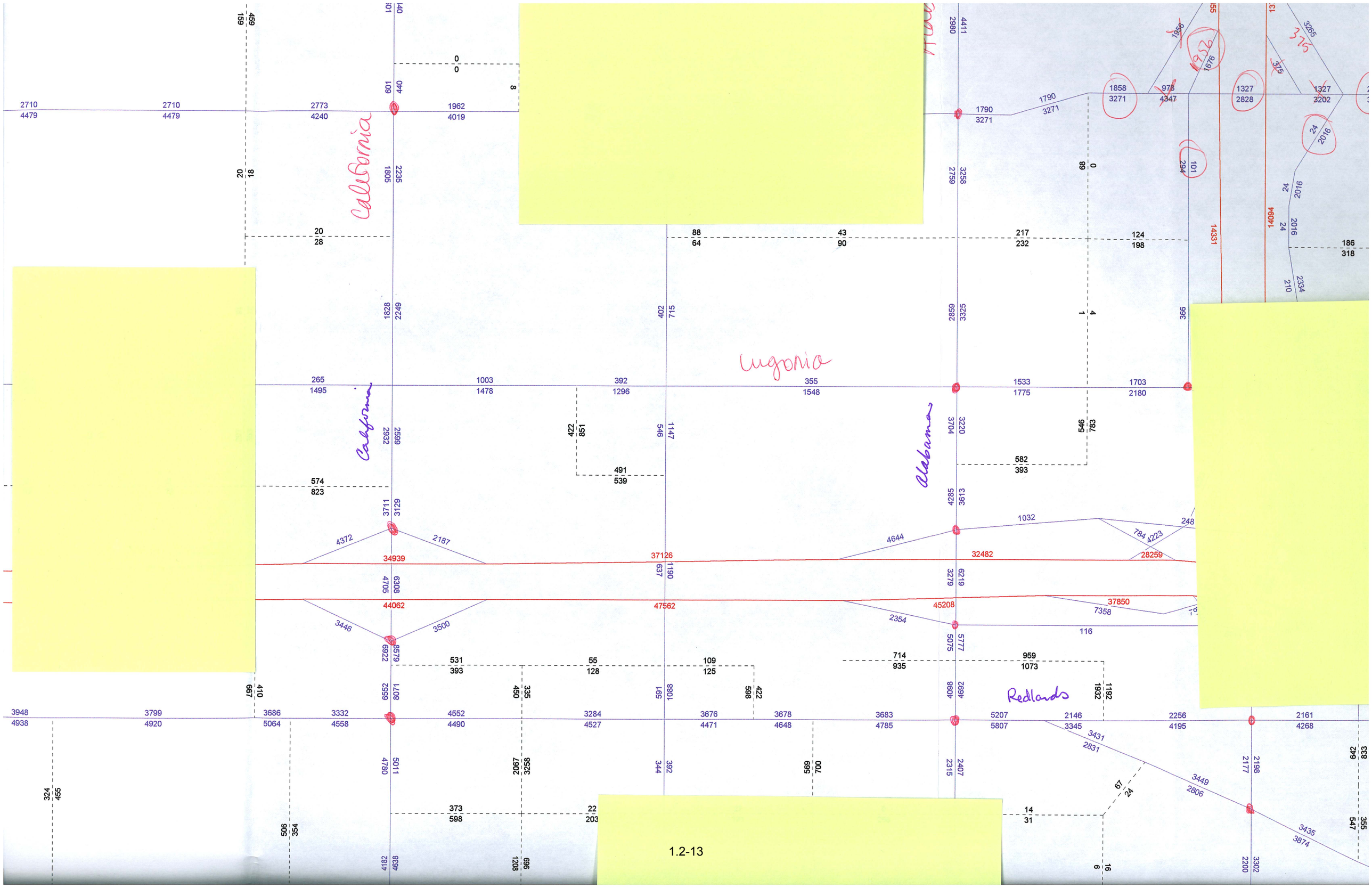
California
California
Lugonia
Alabama
Redlands
34939
37126
32482
44062
47562
45208
37850
28259
14094
14331

2020 TPCC
PM
California
Redlands
1.2-14

APPENDIX 3.1

Traffic Count Data, February 2012

Counts Unlimited Inc.
PO Box 1178
Corona, CA 92878
(951) 268-6268

City of Redlands
N/S: California Street
E/W: Lugonia Avenue
Weather: Sunny

File Name : REDCALUAM
Site Code : 00000097
Start Date : 2/9/2012
Page No : 1

Groups Printed- Passenger Vehicles - Large 2 Axle Vehicles - 3 Axle Vehicles - 4+ Axle Trucks

	California Street Southbound				Lugonia Avenue Westbound				California Street Northbound				Lugonia Avenue Eastbound				
Start Time	Left	Thru	Right	App. Total	Left	Thru	Right	App. Total	Left	Thru	Right	App. Total	Left	Thru	Right	App. Total	Int. Total
07:00 AM	3	22	0	25	7	9	6	22	19	57	15	91	0	1	6	7	145
07:15 AM	1	23	4	28	13	7	9	29	32	60	23	115	0	3	7	10	182
07:30 AM	2	24	0	26	12	11	4	27	40	99	34	173	0	2	1	3	229
07:45 AM	2	29	5	36	8	24	4	36	45	76	31	152	1	3	12	16	240
Total	8	98	9	115	40	51	23	114	136	292	103	531	1	9	26	36	796
08:00 AM	5	49	2	56	9	14	7	30	34	47	24	105	1	3	5	9	200
08:15 AM	4	35	2	41	8	19	8	35	57	71	34	162	0	1	11	12	250
08:30 AM	3	34	0	37	19	6	6	31	27	67	19	113	0	5	12	17	198
08:45 AM	6	37	2	45	14	8	3	25	41	45	25	111	1	3	16	20	201
Total	18	155	6	179	50	47	24	121	159	230	102	491	2	12	44	58	849
Grand Total	26	253	15	294	90	98	47	235	295	522	205	1022	3	21	70	94	1645
Apprch %	8.8	86.1	5.1		38.3	41.7	20		28.9	51.1	20.1		3.2	22.3	74.5		
Total %	1.6	15.4	0.9	17.9	5.5	6	2.9	14.3	17.9	31.7	12.5	62.1	0.2	1.3	4.3	5.7	
Passenger Vehicles	26	187	14	227	90	98	43	231	281	445	204	930	3	18	61	82	1470
% Passenger Vehicles	100	73.9	93.3	77.2	100	100	91.5	98.3	95.3	85.2	99.5	91	100	85.7	87.1	87.2	89.4
Large 2 Axle Vehicles	0	9	1	10	0	0	2	2	3	15	1	19	0	3	3	6	37
% Large 2 Axle Vehicles	0	3.6	6.7	3.4	0	0	4.3	0.9	1	2.9	0.5	1.9	0	14.3	4.3	6.4	2.2
3 Axle Vehicles	0	6	0	6	0	0	1	1	2	11	0	13	0	0	2	2	22
% 3 Axle Vehicles	0	2.4	0	2	0	0	2.1	0.4	0.7	2.1	0	1.3	0	0	2.9	2.1	1.3
4+ Axle Trucks	0	51	0	51	0	0	1	1	9	51	0	60	0	0	4	4	116
% 4+ Axle Trucks	0	20.2	0	17.3	0	0	2.1	0.4	3.1	9.8	0	5.9	0	0	5.7	4.3	7.1

	California Street Southbound				Lugonia Avenue Westbound				California Street Northbound				Lugonia Avenue Eastbound				
Start Time	Left	Thru	Right	App. Total	Left	Thru	Right	App. Total	Left	Thru	Right	App. Total	Left	Thru	Right	App. Total	Int. Total
Peak Hour Analysis From 07:00 AM to 08:45 AM - Peak 1 of 1																	
Peak Hour for Entire Intersection Begins at 07:30 AM																	
07:30 AM	2	24	0	26	**12**	11	4	27	40	**99**	**34**	**173**	0	2	1	3	229
07:45 AM	2	29	**5**	36	8	**24**	4	**36**	45	76	31	152	**1**	**3**	**12**	**16**	240
08:00 AM	**5**	**49**	2	**56**	9	14	7	30	34	47	24	105	1	3	5	9	200
08:15 AM	4	35	2	41	8	19	**8**	35	**57**	71	34	162	0	1	11	12	**250**
Total Volume	13	137	9	159	37	68	23	128	176	293	123	592	2	9	29	40	919
% App. Total	8.2	86.2	5.7		28.9	53.1	18		29.7	49.5	20.8		5	22.5	72.5		
PHF	.650	.699	.450	.710	.771	.708	.719	.889	.772	.740	.904	.855	.500	.750	.604	.625	.919

Counts Unlimited Inc.
PO Box 1178
Corona, CA 92878
(951) 268-6268

City of Redlands
N/S: California Street
E/W: Lugonia Avenue
Weather: Sunny

File Name : REDCALUAM
Site Code : 00000097
Start Date : 2/9/2012
Page No : 2

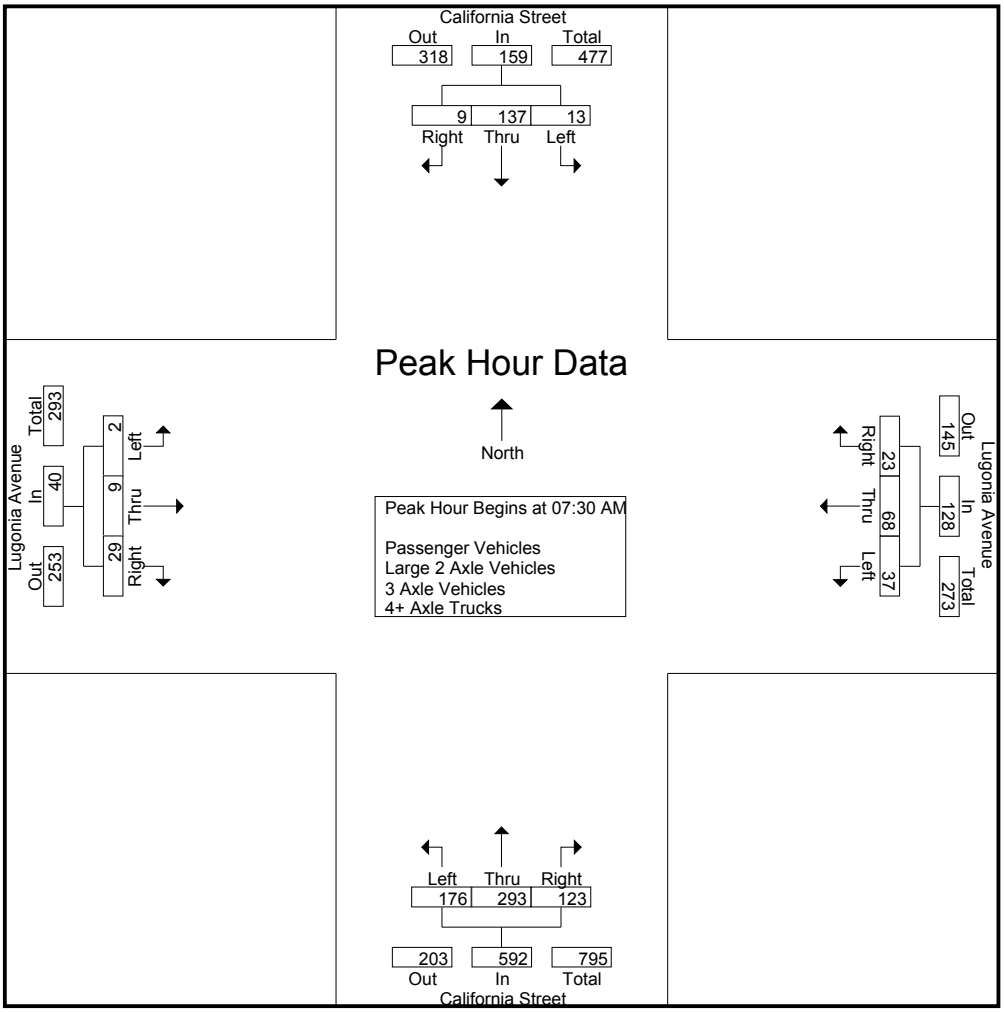

Peak Hour Analysis From 07:00 AM to 08:45 AM - Peak 1 of 1

Peak Hour for Each Approach Begins at:

	08:00 AM				07:45 AM				07:30 AM				08:00 AM			
+0 mins.	5	**49**	**2**	**56**	8	**24**	4	**36**	40	**99**	**34**	**173**	**1**	3	5	9
+15 mins.	4	35	2	41	9	14	7	30	45	76	31	152	0	1	11	12
+30 mins.	3	34	0	37	8	19	**8**	35	34	47	24	105	0	**5**	12	17
+45 mins.	**6**	37	2	45	**19**	6	6	31	**57**	71	34	162	1	3	**16**	**20**
Total Volume	18	155	6	179	44	63	25	132	176	293	123	592	2	12	44	58
% App. Total	10.1	86.6	3.4		33.3	47.7	18.9		29.7	49.5	20.8		3.4	20.7	75.9	
PHF	.750	.791	.750	.799	.579	.656	.781	.917	.772	.740	.904	.855	.500	.600	.688	.725

Counts Unlimited Inc.
PO Box 1178
Corona, CA 92878
(951) 268-6268

City of Redlands
N/S: California Street
E/W: Lugonia Avenue
Weather: Sunny

File Name : REDCALUAM
Site Code : 00000097
Start Date : 2/9/2012
Page No : 1

Groups Printed- Passenger Vehicles

	California Street Southbound				Lugonia Avenue Westbound				California Street Northbound				Lugonia Avenue Eastbound				
Start Time	Left	Thru	Right	App. Total	Left	Thru	Right	App. Total	Left	Thru	Right	App. Total	Left	Thru	Right	App. Total	Int. Total
07:00 AM	3	17	0	20	7	9	6	22	17	47	15	79	0	1	6	7	128
07:15 AM	1	18	3	22	13	7	9	29	31	51	23	105	0	3	6	9	165
07:30 AM	2	19	0	21	12	11	4	27	37	88	34	159	0	2	1	3	210
07:45 AM	2	20	5	27	8	24	4	36	41	65	31	137	1	3	9	13	213
Total	8	74	8	90	40	51	23	114	126	251	103	480	1	9	22	32	716
08:00 AM	5	35	2	42	9	14	6	29	31	40	24	95	1	3	3	7	173
08:15 AM	4	26	2	32	8	19	5	32	57	59	34	150	0	0	10	10	224
08:30 AM	3	28	0	31	19	6	6	31	27	57	18	102	0	4	12	16	180
08:45 AM	6	24	2	32	14	8	3	25	40	38	25	103	1	2	14	17	177
Total	18	113	6	137	50	47	20	117	155	194	101	450	2	9	39	50	754
Grand Total	26	187	14	227	90	98	43	231	281	445	204	930	3	18	61	82	1470
Apprch %	11.5	82.4	6.2		39	42.4	18.6		30.2	47.8	21.9		3.7	22	74.4		
Total %	1.8	12.7	1	15.4	6.1	6.7	2.9	15.7	19.1	30.3	13.9	63.3	0.2	1.2	4.1	5.6	

	California Street Southbound				Lugonia Avenue Westbound				California Street Northbound				Lugonia Avenue Eastbound				
Start Time	Left	Thru	Right	App. Total	Left	Thru	Right	App. Total	Left	Thru	Right	App. Total	Left	Thru	Right	App. Total	Int. Total
Peak Hour Analysis From 07:15 AM to 08:15 AM - Peak 1 of 1																	
Peak Hour for Entire Intersection Begins at 07:30 AM																	
07:30 AM	2	19	0	21	**12**	11	4	27	37	**88**	**34**	**159**	0	2	1	3	210
07:45 AM	2	20	**5**	27	8	**24**	4	**36**	41	65	31	137	**1**	**3**	9	**13**	213
08:00 AM	**5**	**35**	2	**42**	9	14	**6**	29	31	40	24	95	1	3	3	7	173
08:15 AM	4	26	2	32	8	19	5	32	**57**	59	34	150	0	0	**10**	10	**224**
Total Volume	13	100	9	122	37	68	19	124	166	252	123	541	2	8	23	33	820
% App. Total	10.7	82	7.4		29.8	54.8	15.3		30.7	46.6	22.7		6.1	24.2	69.7		
PHF	.650	.714	.450	.726	.771	.708	.792	.861	.728	.716	.904	.851	.500	.667	.575	.635	.915

Counts Unlimited Inc.
PO Box 1178
Corona, CA 92878
(951) 268-6268

City of Redlands
N/S: California Street
E/W: Lugonia Avenue
Weather: Sunny

File Name : REDCALUAM
Site Code : 00000097
Start Date : 2/9/2012
Page No : 2

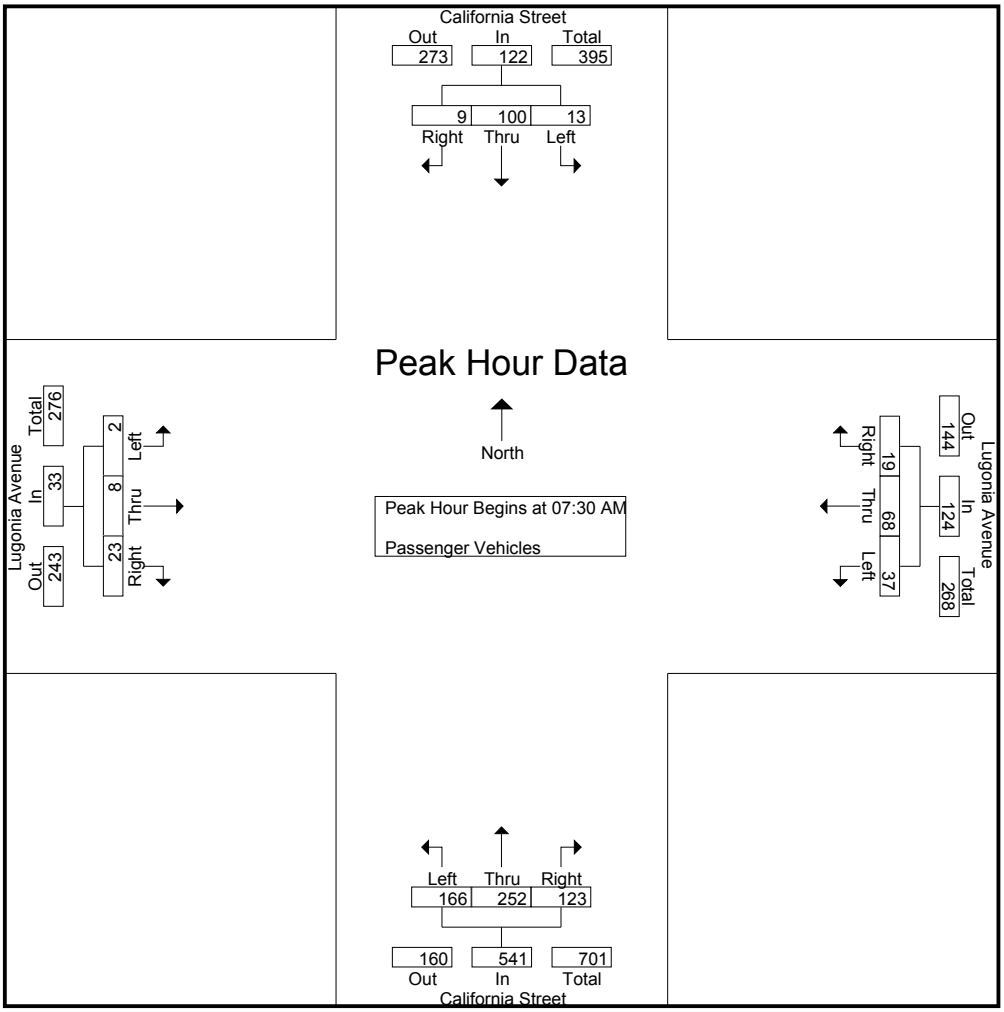

Peak Hour Analysis From 07:15 AM to 08:15 AM - Peak 1 of 1

Peak Hour for Each Approach Begins at:

	07:30 AM				07:30 AM				07:30 AM				07:30 AM			
+0 mins.	2	19	0	21	**12**	11	4	27	37	**88**	**34**	**159**	0	2	1	3
+15 mins.	2	20	**5**	27	8	**24**	4	**36**	41	65	31	137	**1**	**3**	9	**13**
+30 mins.	**5**	**35**	2	**42**	9	14	**6**	29	31	40	24	95	1	3	3	7
+45 mins.	4	26	2	32	8	19	5	32	**57**	59	34	150	0	0	**10**	10
Total Volume	13	100	9	122	37	68	19	124	166	252	123	541	2	8	23	33
% App. Total	10.7	82	7.4		29.8	54.8	15.3		30.7	46.6	22.7		6.1	24.2	69.7	
PHF	.650	.714	.450	.726	.771	.708	.792	.861	.728	.716	.904	.851	.500	.667	.575	.635

Counts Unlimited Inc.
PO Box 1178
Corona, CA 92878
(951) 268-6268

City of Redlands
N/S: California Street
E/W: Lugonia Avenue
Weather: Sunny

File Name : REDCALUAM
Site Code : 00000097
Start Date : 2/9/2012
Page No : 1

Groups Printed- Large 2 Axle Vehicles

	California Street Southbound				Lugonia Avenue Westbound				California Street Northbound				Lugonia Avenue Eastbound				
Start Time	Left	Thru	Right	App. Total	Left	Thru	Right	App. Total	Left	Thru	Right	App. Total	Left	Thru	Right	App. Total	Int. Total
07:00 AM	0	0	0	0	0	0	0	0	0	2	0	2	0	0	0	0	2
07:15 AM	0	1	1	2	0	0	0	0	0	2	0	2	0	0	1	1	5
07:30 AM	0	0	0	0	0	0	0	0	1	0	0	1	0	0	0	0	1
07:45 AM	0	1	0	1	0	0	0	0	0	3	0	3	0	0	0	0	4
Total	0	2	1	3	0	0	0	0	1	7	0	8	0	0	1	1	12
08:00 AM	0	3	0	3	0	0	1	1	2	2	0	4	0	0	1	1	9
08:15 AM	0	1	0	1	0	0	1	1	0	3	0	3	0	1	0	1	6
08:30 AM	0	1	0	1	0	0	0	0	0	1	1	2	0	1	0	1	4
08:45 AM	0	2	0	2	0	0	0	0	0	2	0	2	0	1	1	2	6
Total	0	7	0	7	0	0	2	2	2	8	1	11	0	3	2	5	25
Grand Total	0	9	1	10	0	0	2	2	3	15	1	19	0	3	3	6	37
Apprch %	0	90	10		0	0	100		15.8	78.9	5.3		0	50	50		
Total %	0	24.3	2.7	27	0	0	5.4	5.4	8.1	40.5	2.7	51.4	0	8.1	8.1	16.2	

	California Street Southbound				Lugonia Avenue Westbound				California Street Northbound				Lugonia Avenue Eastbound				
Start Time	Left	Thru	Right	App. Total	Left	Thru	Right	App. Total	Left	Thru	Right	App. Total	Left	Thru	Right	App. Total	Int. Total
Peak Hour Analysis From 07:15 AM to 08:15 AM - Peak 1 of 1																	
Peak Hour for Entire Intersection Begins at 07:30 AM																	
07:30 AM	0	0	0	0	0	0	0	0	1	0	0	1	0	0	0	0	1
07:45 AM	0	1	0	1	0	0	0	0	0	**3**	0	3	0	0	0	0	4
08:00 AM	0	**3**	0	**3**	0	0	**1**	**1**	**2**	2	0	**4**	0	0	**1**	**1**	**9**
08:15 AM	0	1	0	1	0	0	1	1	0	3	0	3	0	**1**	0	1	6
Total Volume	0	5	0	5	0	0	2	2	3	8	0	11	0	1	1	2	20
% App. Total	0	100	0		0	0	100		27.3	72.7	0		0	50	50		
PHF	.000	.417	.000	.417	.000	.000	.500	.500	.375	.667	.000	.688	.000	.250	.250	.500	.556

Counts Unlimited Inc.
PO Box 1178
Corona, CA 92878
(951) 268-6268

City of Redlands
N/S: California Street
E/W: Lugonia Avenue
Weather: Sunny

File Name : REDCALUAM
Site Code : 00000097
Start Date : 2/9/2012
Page No : 2

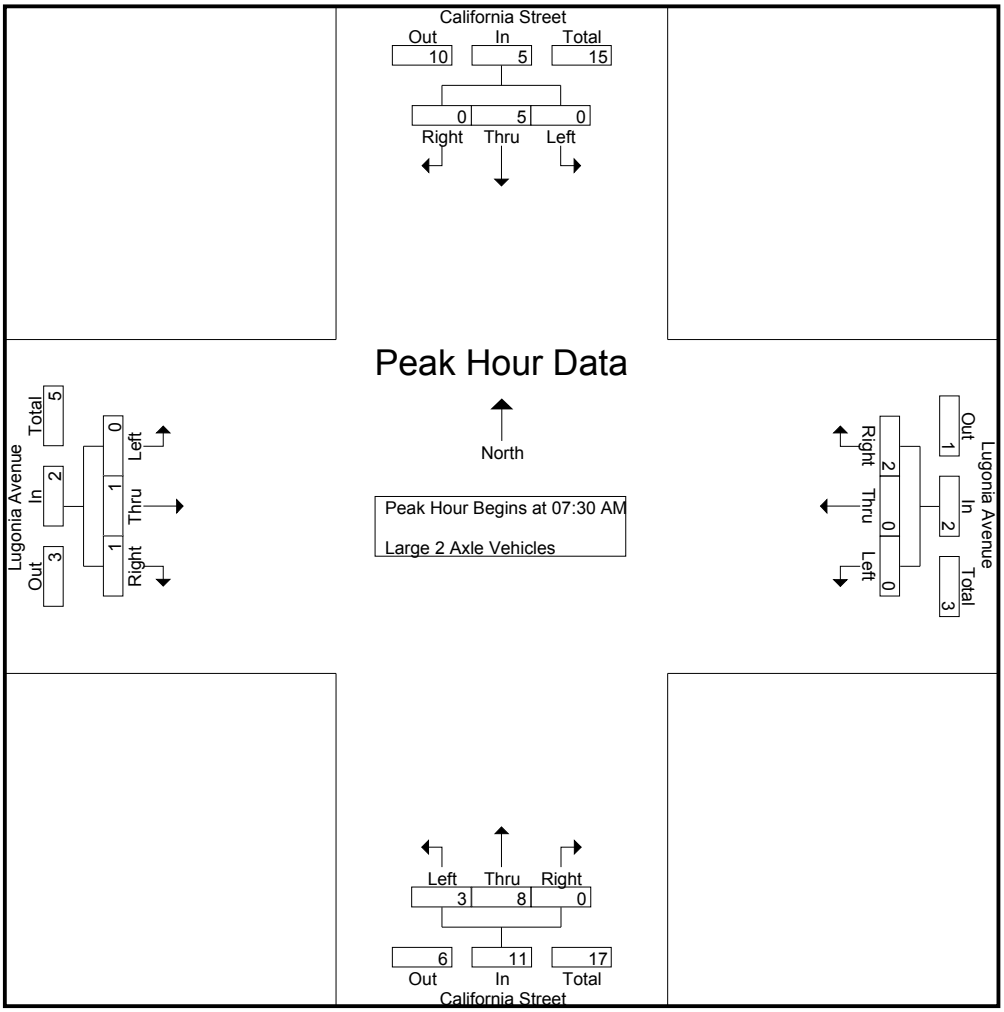

Peak Hour Analysis From 07:15 AM to 08:15 AM - Peak 1 of 1

Peak Hour for Each Approach Begins at:

	07:15 AM				07:30 AM				07:30 AM				07:15 AM			
+0 mins.	0	1	**1**	2	0	0	0	0	1	0	0	1	0	0	**1**	**1**
+15 mins.	0	0	0	0	0	0	0	0	0	**3**	0	3	0	0	0	0
+30 mins.	0	1	0	1	0	0	**1**	**1**	**2**	2	0	**4**	0	0	0	0
+45 mins.	0	**3**	0	**3**	0	0	1	1	0	3	0	3	0	0	1	1
Total Volume	0	5	1	6	0	0	2	2	3	8	0	11	0	0	2	2
% App. Total	0	83.3	16.7		0	0	100		27.3	72.7	0		0	0	100	
PHF	.000	.417	.250	.500	.000	.000	.500	.500	.375	.667	.000	.688	.000	.000	.500	.500

Counts Unlimited Inc.
PO Box 1178
Corona, CA 92878
(951) 268-6268

City of Redlands
N/S: California Street
E/W: Lugonia Avenue
Weather: Sunny

File Name : REDCALUAM
Site Code : 00000097
Start Date : 2/9/2012
Page No : 1

Groups Printed- 3 Axle Vehicles

	California Street Southbound				Lugonia Avenue Westbound				California Street Northbound				Lugonia Avenue Eastbound				
Start Time	Left	Thru	Right	App. Total	Left	Thru	Right	App. Total	Left	Thru	Right	App. Total	Left	Thru	Right	App. Total	Int. Total
07:00 AM	0	1	0	1	0	0	0	0	0	1	0	1	0	0	0	0	2
07:15 AM	0	0	0	0	0	0	0	0	0	0	0	0	0	0	0	0	0
07:30 AM	0	1	0	1	0	0	0	0	0	2	0	2	0	0	0	0	3
07:45 AM	0	1	0	1	0	0	0	0	2	2	0	4	0	0	2	2	7
Total	0	3	0	3	0	0	0	0	2	5	0	7	0	0	2	2	12
08:00 AM	0	0	0	0	0	0	0	0	0	0	0	0	0	0	0	0	0
08:15 AM	0	1	0	1	0	0	1	1	0	2	0	2	0	0	0	0	4
08:30 AM	0	1	0	1	0	0	0	0	0	4	0	4	0	0	0	0	5
08:45 AM	0	1	0	1	0	0	0	0	0	0	0	0	0	0	0	0	1
Total	0	3	0	3	0	0	1	1	0	6	0	6	0	0	0	0	10
Grand Total	0	6	0	6	0	0	1	1	2	11	0	13	0	0	2	2	22
Apprch %	0	100	0		0	0	100		15.4	84.6	0		0	0	100		
Total %	0	27.3	0	27.3	0	0	4.5	4.5	9.1	50	0	59.1	0	0	9.1	9.1	

	California Street Southbound				Lugonia Avenue Westbound				California Street Northbound				Lugonia Avenue Eastbound				
Start Time	Left	Thru	Right	App. Total	Left	Thru	Right	App. Total	Left	Thru	Right	App. Total	Left	Thru	Right	App. Total	Int. Total
Peak Hour Analysis From 07:15 AM to 08:15 AM - Peak 1 of 1																	
Peak Hour for Entire Intersection Begins at 07:30 AM																	
07:30 AM	0	**1**	0	**1**	0	0	0	0	0	**2**	0	2	0	0	0	0	3
07:45 AM	0	1	0	1	0	0	0	0	**2**	2	0	**4**	0	0	**2**	**2**	**7**
08:00 AM	0	0	0	0	0	0	0	0	0	0	0	0	0	0	0	0	0
08:15 AM	0	1	0	1	0	0	**1**	**1**	0	2	0	2	0	0	0	0	4
Total Volume	0	3	0	3	0	0	1	1	2	6	0	8	0	0	2	2	14
% App. Total	0	100	0		0	0	100		25	75	0		0	0	100		
PHF	.000	.750	.000	.750	.000	.000	.250	.250	.250	.750	.000	.500	.000	.000	.250	.250	.500

Counts Unlimited Inc.
PO Box 1178
Corona, CA 92878
(951) 268-6268

City of Redlands
N/S: California Street
E/W: Lugonia Avenue
Weather: Sunny

File Name : REDCALUAM
Site Code : 00000097
Start Date : 2/9/2012
Page No : 2

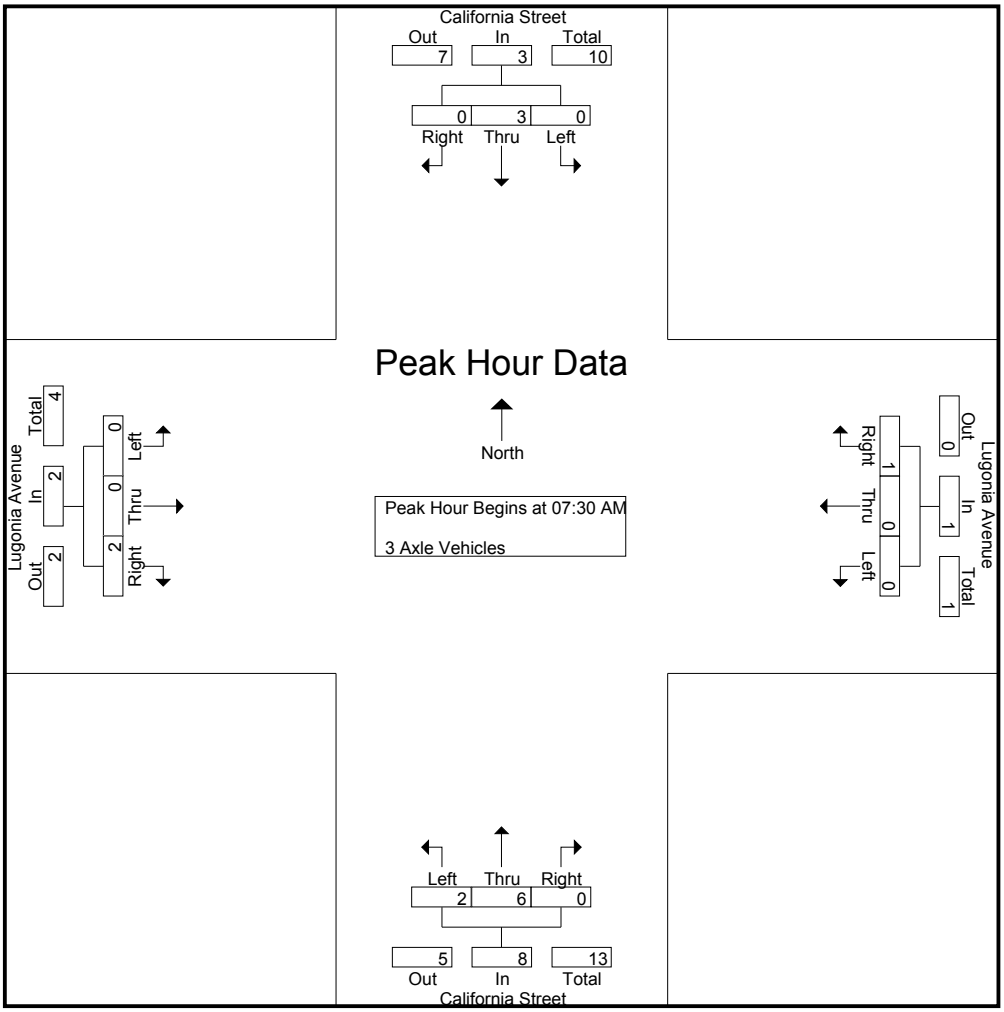

Peak Hour Analysis From 07:15 AM to 08:15 AM - Peak 1 of 1

Peak Hour for Each Approach Begins at:

	07:30 AM				07:30 AM				07:30 AM				07:15 AM			
+0 mins.	0	**1**	0	**1**	0	0	0	0	0	**2**	0	2	0	0	0	0
+15 mins.	0	1	0	1	0	0	0	0	**2**	2	0	**4**	0	0	0	0
+30 mins.	0	0	0	0	0	0	0	0	0	0	0	0	0	0	**2**	**2**
+45 mins.	0	1	0	1	0	0	**1**	**1**	0	2	0	2	0	0	0	0
Total Volume	0	3	0	3	0	0	1	1	2	6	0	8	0	0	2	2
% App. Total	0	100	0		0	0	100		25	75	0		0	0	100	
PHF	.000	.750	.000	.750	.000	.000	.250	.250	.250	.750	.000	.500	.000	.000	.250	.250

Counts Unlimited Inc.
PO Box 1178
Corona, CA 92878
(951) 268-6268

City of Redlands
N/S: California Street
E/W: Lugonia Avenue
Weather: Sunny

File Name : REDCALUAM
Site Code : 00000097
Start Date : 2/9/2012
Page No : 1

Groups Printed- 4+ Axle Trucks

	California Street Southbound				Lugonia Avenue Westbound				California Street Northbound				Lugonia Avenue Eastbound				
Start Time	Left	Thru	Right	App. Total	Left	Thru	Right	App. Total	Left	Thru	Right	App. Total	Left	Thru	Right	App. Total	Int. Total
07:00 AM	0	4	0	4	0	0	0	0	2	7	0	9	0	0	0	0	13
07:15 AM	0	4	0	4	0	0	0	0	1	7	0	8	0	0	0	0	12
07:30 AM	0	4	0	4	0	0	0	0	2	9	0	11	0	0	0	0	15
07:45 AM	0	7	0	7	0	0	0	0	2	6	0	8	0	0	1	1	16
Total	0	19	0	19	0	0	0	0	7	29	0	36	0	0	1	1	56
08:00 AM	0	11	0	11	0	0	0	0	1	5	0	6	0	0	1	1	18
08:15 AM	0	7	0	7	0	0	1	1	0	7	0	7	0	0	1	1	16
08:30 AM	0	4	0	4	0	0	0	0	0	5	0	5	0	0	0	0	9
08:45 AM	0	10	0	10	0	0	0	0	1	5	0	6	0	0	1	1	17
Total	0	32	0	32	0	0	1	1	2	22	0	24	0	0	3	3	60
Grand Total	0	51	0	51	0	0	1	1	9	51	0	60	0	0	4	4	116
Apprch %	0	100	0		0	0	100		15	85	0		0	0	100		
Total %	0	44	0	44	0	0	0.9	0.9	7.8	44	0	51.7	0	0	3.4	3.4	

	California Street Southbound				Lugonia Avenue Westbound				California Street Northbound				Lugonia Avenue Eastbound				
Start Time	Left	Thru	Right	App. Total	Left	Thru	Right	App. Total	Left	Thru	Right	App. Total	Left	Thru	Right	App. Total	Int. Total
Peak Hour Analysis From 07:15 AM to 08:15 AM - Peak 1 of 1																	
Peak Hour for Entire Intersection Begins at 07:30 AM																	
07:30 AM	0	4	0	4	0	0	0	0	**2**	**9**	0	**11**	0	0	0	0	15
07:45 AM	0	7	0	7	0	0	0	0	2	6	0	8	0	0	**1**	**1**	16
08:00 AM	0	**11**	0	**11**	0	0	0	0	1	5	0	6	0	0	1	1	**18**
08:15 AM	0	7	0	7	0	0	**1**	**1**	0	7	0	7	0	0	1	1	16
Total Volume	0	29	0	29	0	0	1	1	5	27	0	32	0	0	3	3	65
% App. Total	0	100	0		0	0	100		15.6	84.4	0		0	0	100		
PHF	.000	.659	.000	.659	.000	.000	.250	.250	.625	.750	.000	.727	.000	.000	.750	.750	.903

Counts Unlimited Inc.
PO Box 1178
Corona, CA 92878
(951) 268-6268

City of Redlands
N/S: California Street
E/W: Lugonia Avenue
Weather: Sunny

File Name : REDCALUAM
Site Code : 00000097
Start Date : 2/9/2012
Page No : 2

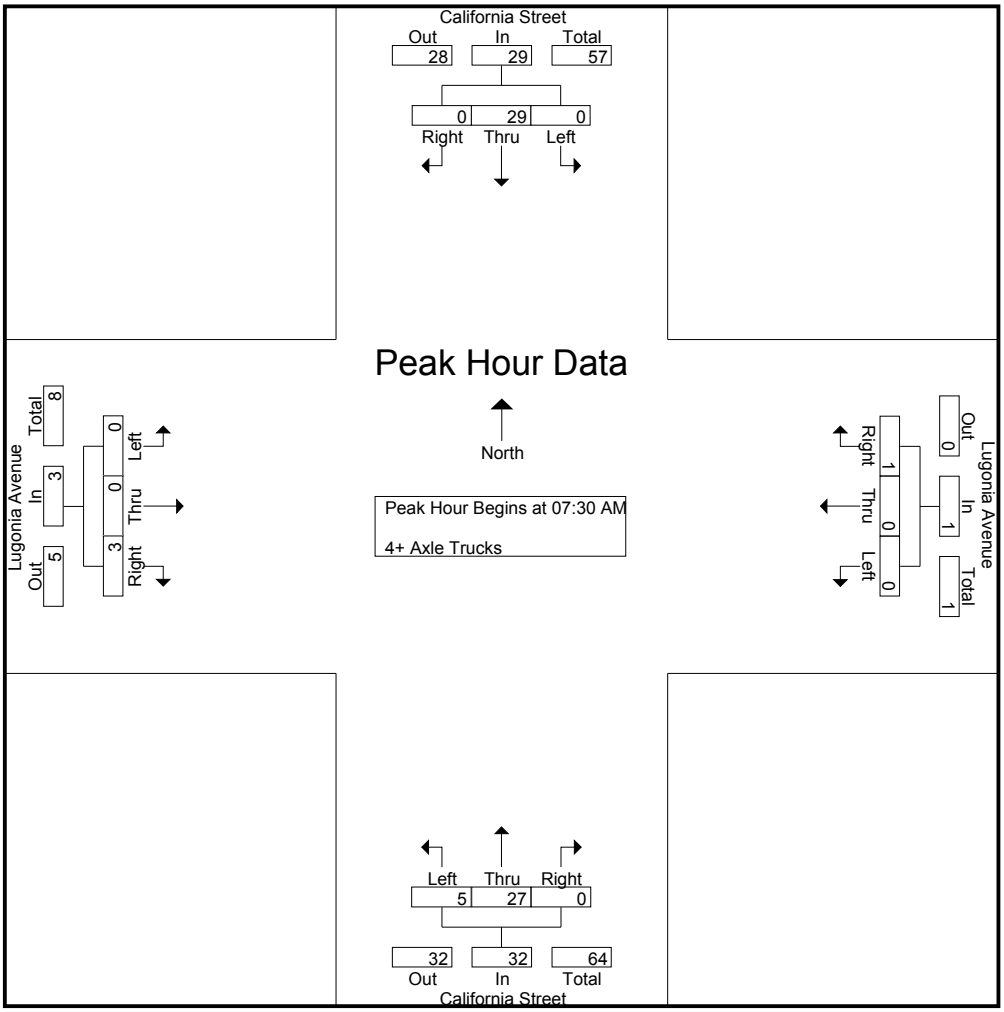

Peak Hour Analysis From 07:15 AM to 08:15 AM - Peak 1 of 1

Peak Hour for Each Approach Begins at:

	07:30 AM				07:30 AM				07:15 AM				07:30 AM			
+0 mins.	0	4	0	4	0	0	0	0	1	7	0	8	0	0	0	0
+15 mins.	0	7	0	7	0	0	0	0	**2**	**9**	0	**11**	0	0	**1**	**1**
+30 mins.	0	**11**	0	**11**	0	0	0	0	2	6	0	8	0	0	1	1
+45 mins.	0	7	0	7	0	0	**1**	**1**	1	5	0	6	0	0	1	1
Total Volume	0	29	0	29	0	0	1	1	6	27	0	33	0	0	3	3
% App. Total	0	100	0		0	0	100		18.2	81.8	0		0	0	100	
PHF	.000	.659	.000	.659	.000	.000	.250	.250	.750	.750	.000	.750	.000	.000	.750	.750

Counts Unlimited Inc.
PO Box 1178
Corona, CA 92878
(951) 268-6268

City of Redlands
N/S: California Street
E/W: Lugonia Avenue
Weather: Sunny

File Name : REDCALUPM
Site Code : 00000097
Start Date : 2/9/2012
Page No : 1

Groups Printed- Passenger Vehicles - Large 2 Axle Vehicles - 3 Axle Vehicles - 4+ Axle Trucks

	California Street Southbound				Lugonia Avenue Westbound				California Street Northbound				Lugonia Avenue Eastbound				
Start Time	Left	Thru	Right	App. Total	Left	Thru	Right	App. Total	Left	Thru	Right	App. Total	Left	Thru	Right	App. Total	Int. Total
04:00 PM	15	108	0	123	40	8	8	56	20	58	30	108	2	5	34	41	328
04:15 PM	6	102	1	109	40	7	7	54	21	60	28	109	0	6	28	34	306
04:30 PM	7	132	3	142	41	8	9	58	18	50	28	96	0	15	47	62	358
04:45 PM	8	76	0	84	24	8	7	39	14	38	27	79	2	11	37	50	252
Total	36	418	4	458	145	31	31	207	73	206	113	392	4	37	146	187	1244
05:00 PM	10	93	1	104	50	12	7	69	9	46	41	96	1	10	53	64	333
05:15 PM	15	99	0	114	35	10	9	54	8	46	29	83	1	13	24	38	289
05:30 PM	13	89	1	103	23	7	8	38	11	43	18	72	0	8	28	36	249
05:45 PM	8	62	0	70	31	4	7	42	5	44	20	69	1	5	14	20	201
Total	46	343	2	391	139	33	31	203	33	179	108	320	3	36	119	158	1072
Grand Total	82	761	6	849	284	64	62	410	106	385	221	712	7	73	265	345	2316
Apprch %	9.7	89.6	0.7		69.3	15.6	15.1		14.9	54.1	31		2	21.2	76.8		
Total %	3.5	32.9	0.3	36.7	12.3	2.8	2.7	17.7	4.6	16.6	9.5	30.7	0.3	3.2	11.4	14.9	
Passenger Vehicles	80	698	4	782	281	58	62	401	100	323	220	643	6	68	263	337	2163
% Passenger Vehicles	97.6	91.7	66.7	92.1	98.9	90.6	100	97.8	94.3	83.9	99.5	90.3	85.7	93.2	99.2	97.7	93.4
Large 2 Axle Vehicles	1	4	1	6	3	6	0	9	4	16	1	21	0	4	1	5	41
% Large 2 Axle Vehicles	1.2	0.5	16.7	0.7	1.1	9.4	0	2.2	3.8	4.2	0.5	2.9	0	5.5	0.4	1.4	1.8
3 Axle Vehicles	1	13	1	15	0	0	0	0	1	9	0	10	1	0	0	1	26
% 3 Axle Vehicles	1.2	1.7	16.7	1.8	0	0	0	0	0.9	2.3	0	1.4	14.3	0	0	0.3	1.1
4+ Axle Trucks	0	46	0	46	0	0	0	0	1	37	0	38	0	1	1	2	86
% 4+ Axle Trucks	0	6	0	5.4	0	0	0	0	0.9	9.6	0	5.3	0	1.4	0.4	0.6	3.7

	California Street Southbound				Lugonia Avenue Westbound				California Street Northbound				Lugonia Avenue Eastbound				
Start Time	Left	Thru	Right	App. Total	Left	Thru	Right	App. Total	Left	Thru	Right	App. Total	Left	Thru	Right	App. Total	Int. Total
Peak Hour Analysis From 04:15 PM to 05:00 PM - Peak 1 of 1																	
Peak Hour for Entire Intersection Begins at 04:15 PM																	
04:15 PM	6	102	1	109	40	7	7	54	**21**	**60**	28	**109**	0	6	28	34	306
04:30 PM	7	**132**	**3**	**142**	41	8	**9**	58	18	50	28	96	0	**15**	47	62	**358**
04:45 PM	8	76	0	84	24	8	7	39	14	38	27	79	**2**	11	37	50	252
05:00 PM	**10**	93	1	104	**50**	**12**	7	**69**	9	46	**41**	96	1	10	**53**	**64**	333
Total Volume	31	403	5	439	155	35	30	220	62	194	124	380	3	42	165	210	1249
% App. Total	7.1	91.8	1.1		70.5	15.9	13.6		16.3	51.1	32.6		1.4	20	78.6		
PHF	.775	.763	.417	.773	.775	.729	.833	.797	.738	.808	.756	.872	.375	.700	.778	.820	.872

Counts Unlimited Inc.
PO Box 1178
Corona, CA 92878
(951) 268-6268

City of Redlands
N/S: California Street
E/W: Lugonia Avenue
Weather: Sunny

File Name : REDCALUPM
Site Code : 00000097
Start Date : 2/9/2012
Page No : 2

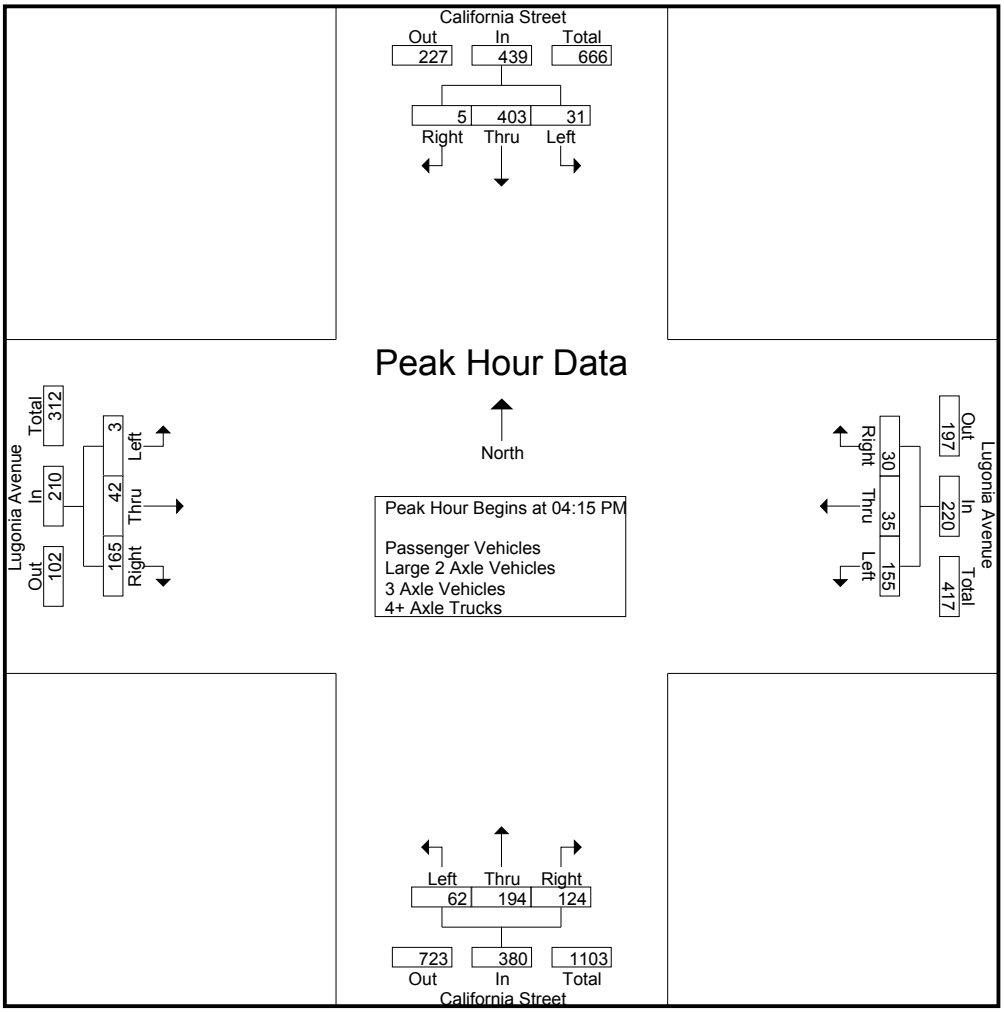

Peak Hour Analysis From 04:15 PM to 05:00 PM - Peak 1 of 1

Peak Hour for Each Approach Begins at:

	04:15 PM				04:15 PM				04:15 PM				04:15 PM			
+0 mins.	6	102	1	109	40	7	7	54	**21**	**60**	28	**109**	0	6	28	34
+15 mins.	7	**132**	**3**	**142**	41	8	**9**	58	18	50	28	96	0	**15**	47	62
+30 mins.	8	76	0	84	24	8	7	39	14	38	27	79	**2**	11	37	50
+45 mins.	**10**	93	1	104	**50**	**12**	7	**69**	9	46	**41**	96	1	10	**53**	**64**
Total Volume	31	403	5	439	155	35	30	220	62	194	124	380	3	42	165	210
% App. Total	7.1	91.8	1.1		70.5	15.9	13.6		16.3	51.1	32.6		1.4	20	78.6	
PHF	.775	.763	.417	.773	.775	.729	.833	.797	.738	.808	.756	.872	.375	.700	.778	.820

Counts Unlimited Inc.
PO Box 1178
Corona, CA 92878
(951) 268-6268

City of Redlands
N/S: California Street
E/W: Lugonia Avenue
Weather: Sunny

File Name : REDCALUPM
Site Code : 00000097
Start Date : 2/9/2012
Page No : 1

Groups Printed- Passenger Vehicles

	California Street Southbound				Lugonia Avenue Westbound				California Street Northbound				Lugonia Avenue Eastbound				
Start Time	Left	Thru	Right	App. Total	Left	Thru	Right	App. Total	Left	Thru	Right	App. Total	Left	Thru	Right	App. Total	Int. Total
04:00 PM	15	101	0	116	40	8	8	56	18	47	30	95	2	5	34	41	308
04:15 PM	6	96	1	103	38	5	7	50	21	53	28	102	0	5	27	32	287
04:30 PM	7	120	1	128	41	7	9	57	18	42	28	88	0	14	47	61	334
04:45 PM	7	71	0	78	24	7	7	38	14	33	27	74	1	10	37	48	238
Total	35	388	2	425	143	27	31	201	71	175	113	359	3	34	145	182	1167
05:00 PM	10	82	1	93	49	11	7	67	6	37	41	84	1	10	53	64	308
05:15 PM	14	91	0	105	35	10	9	54	8	37	29	74	1	13	24	38	271
05:30 PM	13	80	1	94	23	7	8	38	10	36	17	63	0	7	27	34	229
05:45 PM	8	57	0	65	31	3	7	41	5	38	20	63	1	4	14	19	188
Total	45	310	2	357	138	31	31	200	29	148	107	284	3	34	118	155	996
Grand Total	80	698	4	782	281	58	62	401	100	323	220	643	6	68	263	337	2163
Apprch %	10.2	89.3	0.5		70.1	14.5	15.5		15.6	50.2	34.2		1.8	20.2	78		
Total %	3.7	32.3	0.2	36.2	13	2.7	2.9	18.5	4.6	14.9	10.2	29.7	0.3	3.1	12.2	15.6	

	California Street Southbound				Lugonia Avenue Westbound				California Street Northbound				Lugonia Avenue Eastbound				
Start Time	Left	Thru	Right	App. Total	Left	Thru	Right	App. Total	Left	Thru	Right	App. Total	Left	Thru	Right	App. Total	Int. Total
Peak Hour Analysis From 04:15 PM to 05:00 PM - Peak 1 of 1																	
Peak Hour for Entire Intersection Begins at 04:15 PM																	
04:15 PM	6	96	**1**	103	38	5	7	50	**21**	**53**	28	**102**	0	5	27	32	287
04:30 PM	7	**120**	1	**128**	41	7	**9**	57	18	42	28	88	0	**14**	47	61	**334**
04:45 PM	7	71	0	78	24	7	7	38	14	33	27	74	**1**	10	37	48	238
05:00 PM	**10**	82	1	93	**49**	**11**	7	**67**	6	37	**41**	84	1	10	**53**	**64**	308
Total Volume	30	369	3	402	152	30	30	212	59	165	124	348	2	39	164	205	1167
% App. Total	7.5	91.8	0.7		71.7	14.2	14.2		17	47.4	35.6		1	19	80		
PHF	.750	.769	.750	.785	.776	.682	.833	.791	.702	.778	.756	.853	.500	.696	.774	.801	.874

Counts Unlimited Inc.
PO Box 1178
Corona, CA 92878
(951) 268-6268

City of Redlands
N/S: California Street
E/W: Lugonia Avenue
Weather: Sunny

File Name : REDCALUPM
Site Code : 00000097
Start Date : 2/9/2012
Page No : 2

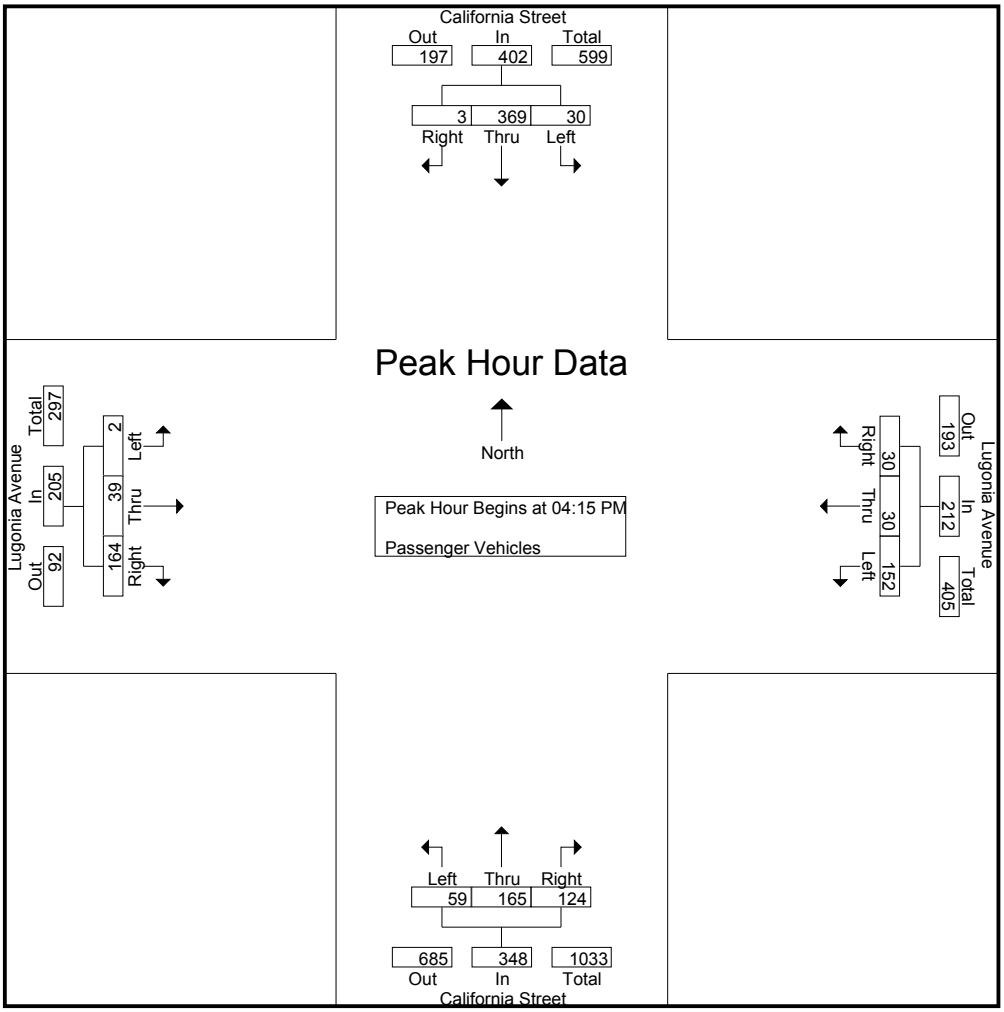

Peak Hour Analysis From 04:15 PM to 05:00 PM - Peak 1 of 1

Peak Hour for Each Approach Begins at:

	04:15 PM				04:15 PM				04:15 PM				04:15 PM			
+0 mins.	6	96	**1**	103	38	5	7	50	**21**	**53**	28	**102**	0	5	27	32
+15 mins.	7	**120**	1	**128**	41	7	**9**	57	18	42	28	88	0	**14**	47	61
+30 mins.	7	71	0	78	24	7	7	38	14	33	27	74	**1**	10	37	48
+45 mins.	**10**	82	1	93	**49**	**11**	7	**67**	6	37	**41**	84	1	10	**53**	**64**
Total Volume	30	369	3	402	152	30	30	212	59	165	124	348	2	39	164	205
% App. Total	7.5	91.8	0.7		71.7	14.2	14.2		17	47.4	35.6		1	19	80	
PHF	.750	.769	.750	.785	.776	.682	.833	.791	.702	.778	.756	.853	.500	.696	.774	.801

Counts Unlimited Inc.
PO Box 1178
Corona, CA 92878
(951) 268-6268

City of Redlands
N/S: California Street
E/W: Lugonia Avenue
Weather: Sunny

File Name : REDCALUPM
Site Code : 00000097
Start Date : 2/9/2012
Page No : 1

Groups Printed- Large 2 Axle Vehicles

	California Street Southbound				Lugonia Avenue Westbound				California Street Northbound				Lugonia Avenue Eastbound				
Start Time	Left	Thru	Right	App. Total	Left	Thru	Right	App. Total	Left	Thru	Right	App. Total	Left	Thru	Right	App. Total	Int. Total
04:00 PM	0	1	0	1	0	0	0	0	2	4	0	6	0	0	0	0	7
04:15 PM	0	0	0	0	2	2	0	4	0	2	0	2	0	1	1	2	8
04:30 PM	0	0	1	1	0	1	0	1	0	2	0	2	0	1	0	1	5
04:45 PM	0	0	0	0	0	1	0	1	0	0	0	0	0	1	0	1	2
Total	0	1	1	2	2	4	0	6	2	8	0	10	0	3	1	4	22
05:00 PM	0	1	0	1	1	1	0	2	1	1	0	2	0	0	0	0	5
05:15 PM	1	1	0	2	0	0	0	0	0	4	0	4	0	0	0	0	6
05:30 PM	0	0	0	0	0	0	0	0	1	2	1	4	0	1	0	1	5
05:45 PM	0	1	0	1	0	1	0	1	0	1	0	1	0	0	0	0	3
Total	1	3	0	4	1	2	0	3	2	8	1	11	0	1	0	1	19
Grand Total	1	4	1	6	3	6	0	9	4	16	1	21	0	4	1	5	41
Apprch %	16.7	66.7	16.7		33.3	66.7	0		19	76.2	4.8		0	80	20		
Total %	2.4	9.8	2.4	14.6	7.3	14.6	0	22	9.8	39	2.4	51.2	0	9.8	2.4	12.2	

	California Street Southbound				Lugonia Avenue Westbound				California Street Northbound				Lugonia Avenue Eastbound				
Start Time	Left	Thru	Right	App. Total	Left	Thru	Right	App. Total	Left	Thru	Right	App. Total	Left	Thru	Right	App. Total	Int. Total
Peak Hour Analysis From 04:15 PM to 05:00 PM - Peak 1 of 1																	
Peak Hour for Entire Intersection Begins at 04:15 PM																	
04:15 PM	0	0	0	0	**2**	**2**	0	**4**	0	**2**	0	**2**	0	**1**	**1**	**2**	**8**
04:30 PM	0	0	**1**	**1**	0	1	0	1	0	2	0	2	0	1	0	1	5
04:45 PM	0	0	0	0	0	1	0	1	0	0	0	0	0	1	0	1	2
05:00 PM	0	**1**	0	1	1	1	0	2	**1**	1	0	2	0	0	0	0	5
Total Volume	0	1	1	2	3	5	0	8	1	5	0	6	0	3	1	4	20
% App. Total	0	50	50		37.5	62.5	0		16.7	83.3	0		0	75	25		
PHF	.000	.250	.250	.500	.375	.625	.000	.500	.250	.625	.000	.750	.000	.750	.250	.500	.625

Counts Unlimited Inc.
PO Box 1178
Corona, CA 92878
(951) 268-6268

City of Redlands
N/S: California Street
E/W: Lugonia Avenue
Weather: Sunny

File Name : REDCALUPM
Site Code : 00000097
Start Date : 2/9/2012
Page No : 2

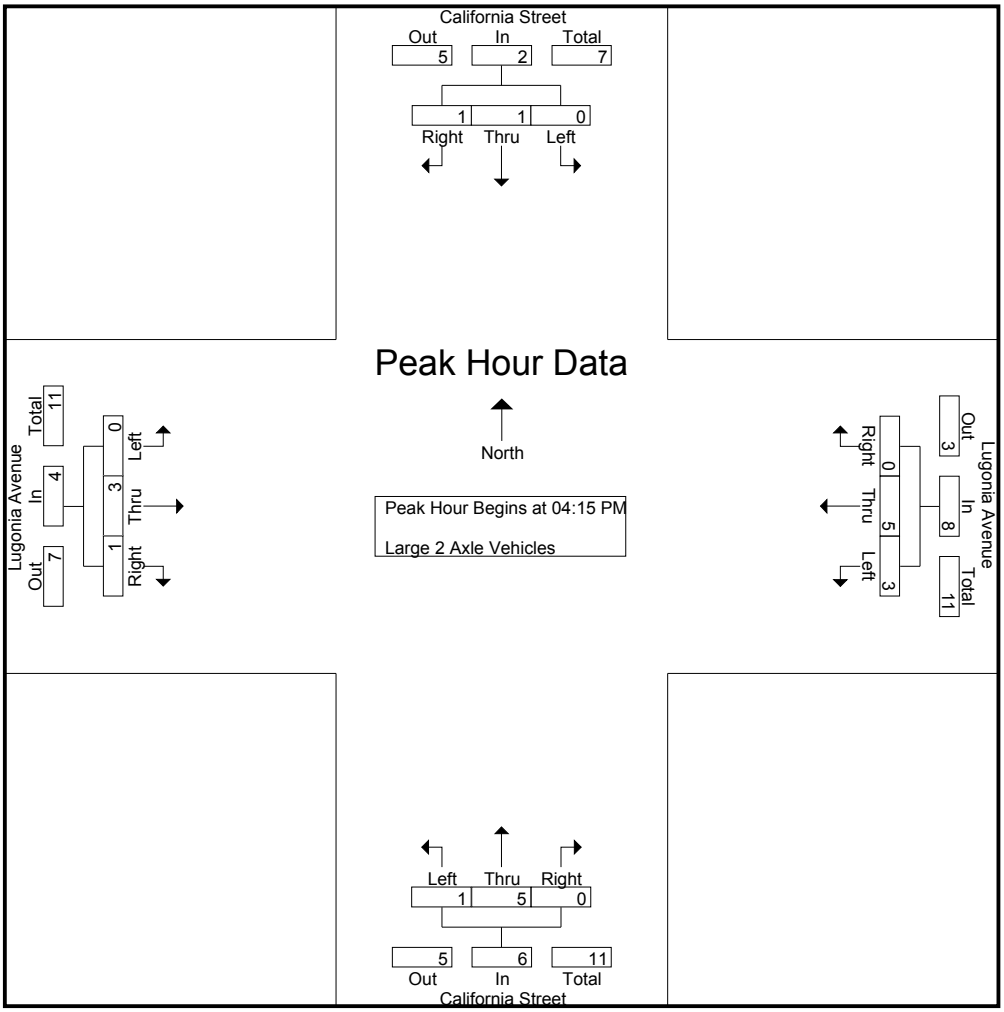

Peak Hour Analysis From 04:15 PM to 05:00 PM - Peak 1 of 1

Peak Hour for Each Approach Begins at:

	04:15 PM				04:15 PM				04:15 PM				04:15 PM			
+0 mins.	0	0	0	0	**2**	**2**	0	**4**	0	**2**	0	**2**	0	**1**	**1**	**2**
+15 mins.	0	0	**1**	**1**	0	1	0	1	0	2	0	2	0	1	0	1
+30 mins.	0	0	0	0	0	1	0	1	0	0	0	0	0	1	0	1
+45 mins.	0	**1**	0	1	1	1	0	2	**1**	1	0	2	0	0	0	0
Total Volume	0	1	1	2	3	5	0	8	1	5	0	6	0	3	1	4
% App. Total	0	50	50		37.5	62.5	0		16.7	83.3	0		0	75	25	
PHF	.000	.250	.250	.500	.375	.625	.000	.500	.250	.625	.000	.750	.000	.750	.250	.500

Counts Unlimited Inc.
PO Box 1178
Corona, CA 92878
(951) 268-6268

City of Redlands
N/S: California Street
E/W: Lugonia Avenue
Weather: Sunny

File Name : REDCALUPM
Site Code : 00000097
Start Date : 2/9/2012
Page No : 1

Groups Printed- 3 Axle Vehicles

	California Street Southbound				Lugonia Avenue Westbound				California Street Northbound				Lugonia Avenue Eastbound				
Start Time	Left	Thru	Right	App. Total	Left	Thru	Right	App. Total	Left	Thru	Right	App. Total	Left	Thru	Right	App. Total	Int. Total
04:00 PM	0	3	0	3	0	0	0	0	0	1	0	1	0	0	0	0	4
04:15 PM	0	1	0	1	0	0	0	0	0	1	0	1	0	0	0	0	2
04:30 PM	0	2	1	3	0	0	0	0	0	2	0	2	0	0	0	0	5
04:45 PM	1	1	0	2	0	0	0	0	0	0	0	0	1	0	0	1	3
Total	1	7	1	9	0	0	0	0	0	4	0	4	1	0	0	1	14
05:00 PM	0	2	0	2	0	0	0	0	1	2	0	3	0	0	0	0	5
05:15 PM	0	1	0	1	0	0	0	0	0	2	0	2	0	0	0	0	3
05:30 PM	0	2	0	2	0	0	0	0	0	0	0	0	0	0	0	0	2
05:45 PM	0	1	0	1	0	0	0	0	0	1	0	1	0	0	0	0	2
Total	0	6	0	6	0	0	0	0	1	5	0	6	0	0	0	0	12
Grand Total	1	13	1	15	0	0	0	0	1	9	0	10	1	0	0	1	26
Apprch %	6.7	86.7	6.7		0	0	0		10	90	0		100	0	0		
Total %	3.8	50	3.8	57.7	0	0	0	0	3.8	34.6	0	38.5	3.8	0	0	3.8	

	California Street Southbound				Lugonia Avenue Westbound				California Street Northbound				Lugonia Avenue Eastbound				
Start Time	Left	Thru	Right	App. Total	Left	Thru	Right	App. Total	Left	Thru	Right	App. Total	Left	Thru	Right	App. Total	Int. Total
Peak Hour Analysis From 04:15 PM to 05:00 PM - Peak 1 of 1																	
Peak Hour for Entire Intersection Begins at 04:15 PM																	
04:15 PM	0	1	0	1	0	0	0	0	0	1	0	1	0	0	0	0	2
04:30 PM	0	**2**	**1**	**3**	0	0	0	0	0	**2**	0	2	0	0	0	0	**5**
04:45 PM	**1**	1	0	2	0	0	0	0	0	0	0	0	**1**	0	0	**1**	3
05:00 PM	0	2	0	2	0	0	0	0	**1**	2	0	**3**	0	0	0	0	5
Total Volume	1	6	1	8	0	0	0	0	1	5	0	6	1	0	0	1	15
% App. Total	12.5	75	12.5		0	0	0		16.7	83.3	0		100	0	0		
PHF	.250	.750	.250	.667	.000	.000	.000	.000	.250	.625	.000	.500	.250	.000	.000	.250	.750

Counts Unlimited Inc.
PO Box 1178
Corona, CA 92878
(951) 268-6268

City of Redlands
N/S: California Street
E/W: Lugonia Avenue
Weather: Sunny

File Name : REDCALUPM
Site Code : 00000097
Start Date : 2/9/2012
Page No : 2

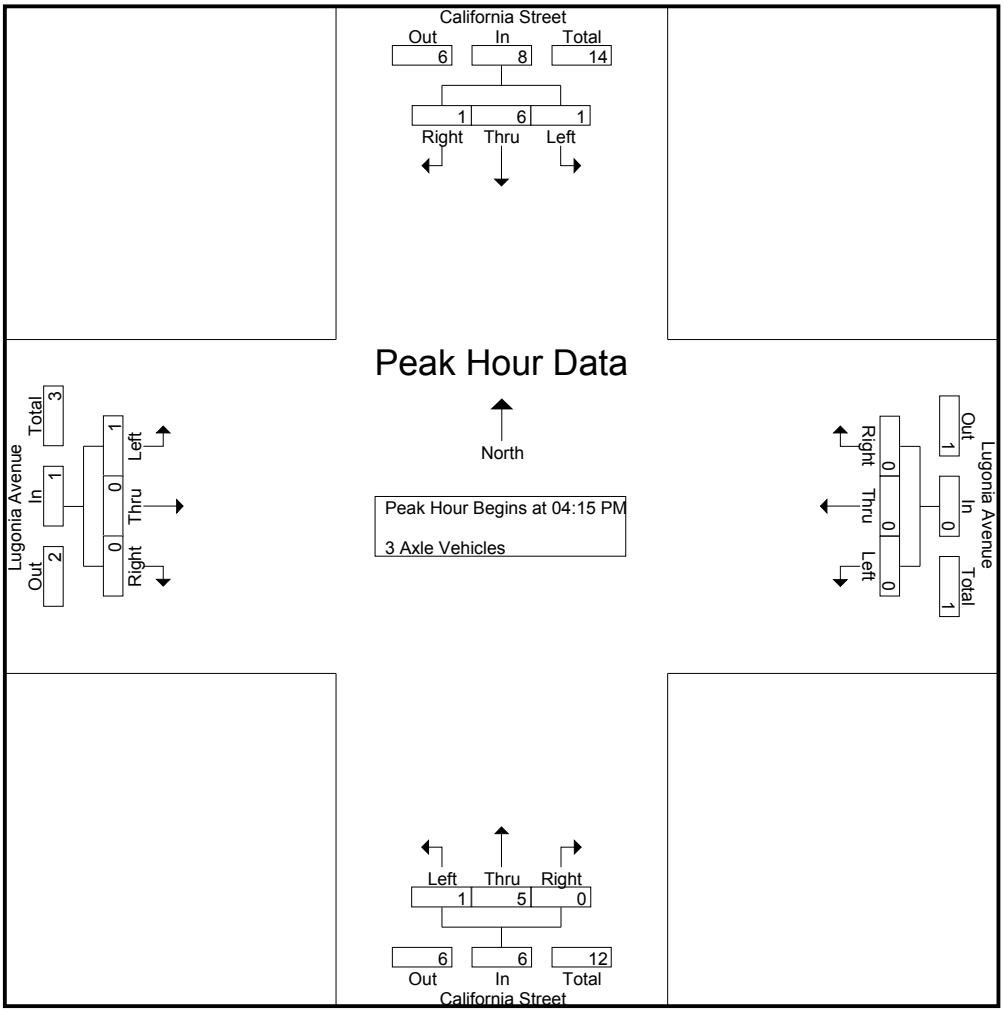

Peak Hour Analysis From 04:15 PM to 05:00 PM - Peak 1 of 1

Peak Hour for Each Approach Begins at:

	04:15 PM				04:15 PM				04:15 PM				04:15 PM			
+0 mins.	0	1	0	1	0	0	0	0	0	1	0	1	0	0	0	0
+15 mins.	0	**2**	**1**	**3**	0	0	0	0	0	**2**	0	2	0	0	0	0
+30 mins.	**1**	1	0	2	0	0	0	0	0	0	0	0	**1**	0	0	**1**
+45 mins.	0	2	0	2	0	0	0	0	**1**	2	0	**3**	0	0	0	0
Total Volume	1	6	1	8	0	0	0	0	1	5	0	6	1	0	0	1
% App. Total	12.5	75	12.5		0	0	0		16.7	83.3	0		100	0	0	
PHF	.250	.750	.250	.667	.000	.000	.000	.000	.250	.625	.000	.500	.250	.000	.000	.250

Counts Unlimited Inc.
PO Box 1178
Corona, CA 92878
(951) 268-6268

City of Redlands
N/S: California Street
E/W: Lugonia Avenue
Weather: Sunny

File Name : REDCALUPM
Site Code : 00000097
Start Date : 2/9/2012
Page No : 1

Groups Printed- 4+ Axle Trucks

	California Street Southbound				Lugonia Avenue Westbound				California Street Northbound				Lugonia Avenue Eastbound				
Start Time	Left	Thru	Right	App. Total	Left	Thru	Right	App. Total	Left	Thru	Right	App. Total	Left	Thru	Right	App. Total	Int. Total
04:00 PM	0	3	0	3	0	0	0	0	0	6	0	6	0	0	0	0	9
04:15 PM	0	5	0	5	0	0	0	0	0	4	0	4	0	0	0	0	9
04:30 PM	0	10	0	10	0	0	0	0	0	4	0	4	0	0	0	0	14
04:45 PM	0	4	0	4	0	0	0	0	0	5	0	5	0	0	0	0	9
Total	0	22	0	22	0	0	0	0	0	19	0	19	0	0	0	0	41
05:00 PM	0	8	0	8	0	0	0	0	1	6	0	7	0	0	0	0	15
05:15 PM	0	6	0	6	0	0	0	0	0	3	0	3	0	0	0	0	9
05:30 PM	0	7	0	7	0	0	0	0	0	5	0	5	0	0	1	1	13
05:45 PM	0	3	0	3	0	0	0	0	0	4	0	4	0	1	0	1	8
Total	0	24	0	24	0	0	0	0	1	18	0	19	0	1	1	2	45
Grand Total	0	46	0	46	0	0	0	0	1	37	0	38	0	1	1	2	86
Apprch %	0	100	0		0	0	0		2.6	97.4	0		0	50	50		
Total %	0	53.5	0	53.5	0	0	0	0	1.2	43	0	44.2	0	1.2	1.2	2.3	

	California Street Southbound				Lugonia Avenue Westbound				California Street Northbound				Lugonia Avenue Eastbound				
Start Time	Left	Thru	Right	App. Total	Left	Thru	Right	App. Total	Left	Thru	Right	App. Total	Left	Thru	Right	App. Total	Int. Total
Peak Hour Analysis From 04:15 PM to 05:00 PM - Peak 1 of 1																	
Peak Hour for Entire Intersection Begins at 04:15 PM																	
04:15 PM	0	5	0	5	0	0	0	0	0	4	0	4	0	0	0	0	9
04:30 PM	0	**10**	0	**10**	0	0	0	0	0	4	0	4	0	0	0	0	14
04:45 PM	0	4	0	4	0	0	0	0	0	5	0	5	0	0	0	0	9
05:00 PM	0	8	0	8	0	0	0	0	**1**	**6**	0	**7**	0	0	0	0	**15**
Total Volume	0	27	0	27	0	0	0	0	1	19	0	20	0	0	0	0	47
% App. Total	0	100	0		0	0	0		5	95	0		0	0	0		
PHF	.000	.675	.000	.675	.000	.000	.000	.000	.250	.792	.000	.714	.000	.000	.000	.000	.783

Counts Unlimited Inc.
PO Box 1178
Corona, CA 92878
(951) 268-6268

City of Redlands
N/S: California Street
E/W: Lugonia Avenue
Weather: Sunny

File Name : REDCALUPM
Site Code : 00000097
Start Date : 2/9/2012
Page No : 2

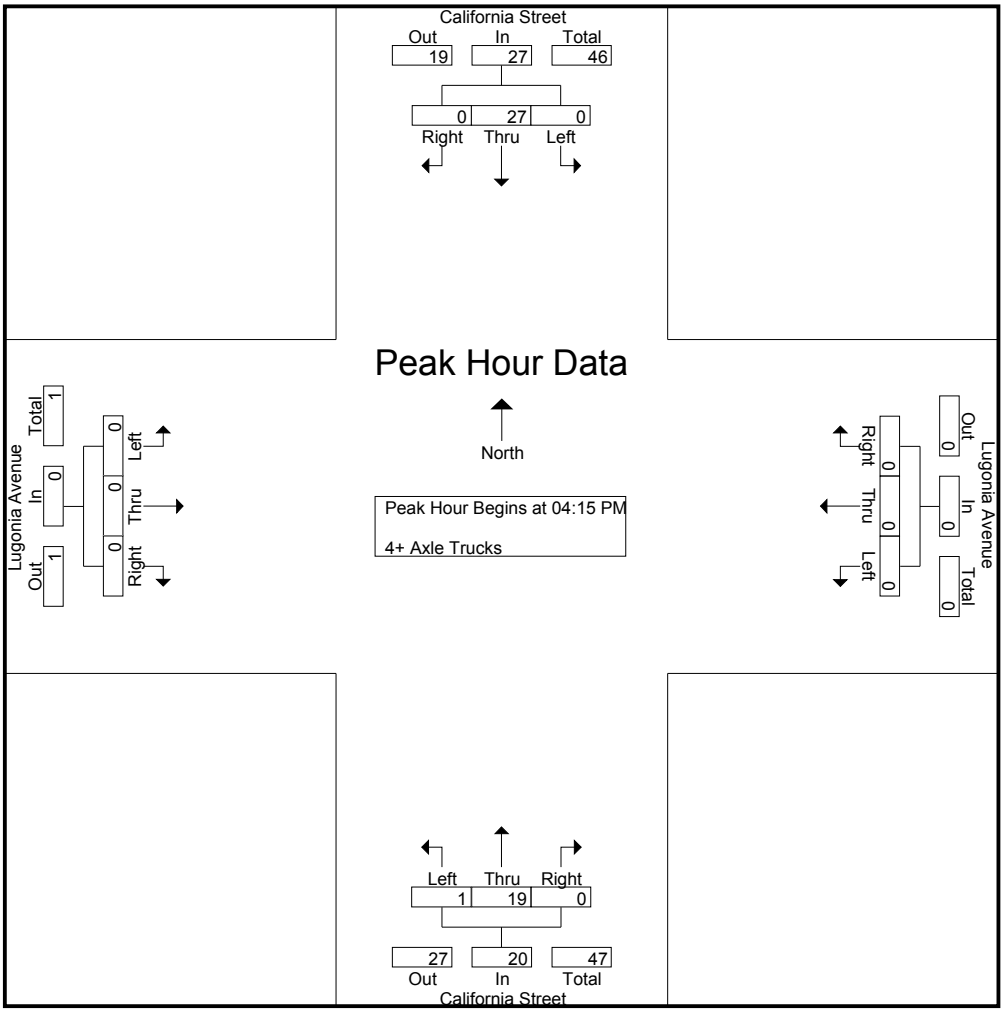

Peak Hour Analysis From 04:15 PM to 05:00 PM - Peak 1 of 1

Peak Hour for Each Approach Begins at:

	04:15 PM				04:15 PM				04:15 PM				04:15 PM			
+0 mins.	0	5	0	5	0	0	0	0	0	4	0	4	0	0	0	0
+15 mins.	0	**10**	0	**10**	0	0	0	0	0	4	0	4	0	0	0	0
+30 mins.	0	4	0	4	0	0	0	0	0	5	0	5	0	0	0	0
+45 mins.	0	8	0	8	0	0	0	0	**1**	**6**	0	**7**	0	0	0	0
Total Volume	0	27	0	27	0	0	0	0	1	19	0	20	0	0	0	0
% App. Total	0	100	0		0	0	0		5	95	0		0	0	0	
PHF	.000	.675	.000	.675	.000	.000	.000	.000	.250	.792	.000	.714	.000	.000	.000	.000

Counts Unlimited Inc.
PO Box 1178
Corona, CA 92878
(951) 268-6268

City of Redlands
N/S: Nevada Street
E/W: Lugonia Avenue
Weather: Sunny

File Name : REDNELUAM
Site Code : 00000125
Start Date : 2/9/2012
Page No : 1

Groups Printed- Passenger Vehicles - Large 2 Axle Vehicles - 3 Axle Vehicles - 4+ Axle Trucks

	Nevada Street Southbound				Lugonia Avenue Westbound				Nevada Street Northbound				Lugonia Avenue Eastbound				
Start Time	Left	Thru	Right	App. Total	Left	Thru	Right	App. Total	Left	Thru	Right	App. Total	Left	Thru	Right	App. Total	Int. Total
07:00 AM	0	16	6	22	10	25	3	38	0	12	7	19	2	8	2	12	91
07:15 AM	2	23	1	26	24	29	4	57	6	19	4	29	6	8	5	19	131
07:30 AM	2	20	2	24	17	26	2	45	5	19	4	28	1	13	10	24	121
07:45 AM	1	41	4	46	37	36	4	77	14	18	5	37	2	11	9	22	182
Total	5	100	13	118	88	116	13	217	25	68	20	113	11	40	26	77	525
08:00 AM	3	37	6	46	10	29	1	40	8	22	13	43	3	18	6	27	156
08:15 AM	1	22	4	27	32	27	0	59	4	16	8	28	0	11	3	14	128
08:30 AM	4	27	3	34	13	23	2	38	3	9	10	22	2	12	6	20	114
08:45 AM	3	31	0	34	25	20	2	47	4	10	15	29	0	11	4	15	125
Total	11	117	13	141	80	99	5	184	19	57	46	122	5	52	19	76	523
Grand Total	16	217	26	259	168	215	18	401	44	125	66	235	16	92	45	153	1048
Apprch %	6.2	83.8	10		41.9	53.6	4.5		18.7	53.2	28.1		10.5	60.1	29.4		
Total %	1.5	20.7	2.5	24.7	16	20.5	1.7	38.3	4.2	11.9	6.3	22.4	1.5	8.8	4.3	14.6	
Passenger Vehicles	15	211	26	252	167	215	18	400	41	119	66	226	16	91	42	149	1027
% Passenger Vehicles	93.8	97.2	100	97.3	99.4	100	100	99.8	93.2	95.2	100	96.2	100	98.9	93.3	97.4	98
Large 2 Axle Vehicles	1	2	0	3	1	0	0	1	1	2	0	3	0	0	3	3	10
% Large 2 Axle Vehicles	6.2	0.9	0	1.2	0.6	0	0	0.2	2.3	1.6	0	1.3	0	0	6.7	2	1
3 Axle Vehicles	0	3	0	3	0	0	0	0	1	3	0	4	0	1	0	1	8
% 3 Axle Vehicles	0	1.4	0	1.2	0	0	0	0	2.3	2.4	0	1.7	0	1.1	0	0.7	0.8
4+ Axle Trucks	0	1	0	1	0	0	0	0	1	1	0	2	0	0	0	0	3
% 4+ Axle Trucks	0	0.5	0	0.4	0	0	0	0	2.3	0.8	0	0.9	0	0	0	0	0.3

	Nevada Street Southbound				Lugonia Avenue Westbound				Nevada Street Northbound				Lugonia Avenue Eastbound				
Start Time	Left	Thru	Right	App. Total	Left	Thru	Right	App. Total	Left	Thru	Right	App. Total	Left	Thru	Right	App. Total	Int. Total
Peak Hour Analysis From 07:00 AM to 08:45 AM - Peak 1 of 1																	
Peak Hour for Entire Intersection Begins at 07:15 AM																	
07:15 AM	2	23	1	26	24	29	**4**	57	6	19	4	29	**6**	8	5	19	131
07:30 AM	2	20	2	24	17	26	2	45	5	19	4	28	1	13	**10**	24	121
07:45 AM	1	**41**	4	**46**	**37**	**36**	4	**77**	**14**	18	5	37	2	11	9	22	**182**
08:00 AM	**3**	37	**6**	46	10	29	1	40	8	**22**	**13**	**43**	3	**18**	6	**27**	156
Total Volume	8	121	13	142	88	120	11	219	33	78	26	137	12	50	30	92	590
% App. Total	5.6	85.2	9.2		40.2	54.8	5		24.1	56.9	19		13	54.3	32.6		
PHF	.667	.738	.542	.772	.595	.833	.688	.711	.589	.886	.500	.797	.500	.694	.750	.852	.810

Counts Unlimited Inc.
PO Box 1178
Corona, CA 92878
(951) 268-6268

City of Redlands
N/S: Nevada Street
E/W: Lugonia Avenue
Weather: Sunny

File Name : REDNELUAM
Site Code : 00000125
Start Date : 2/9/2012
Page No : 2

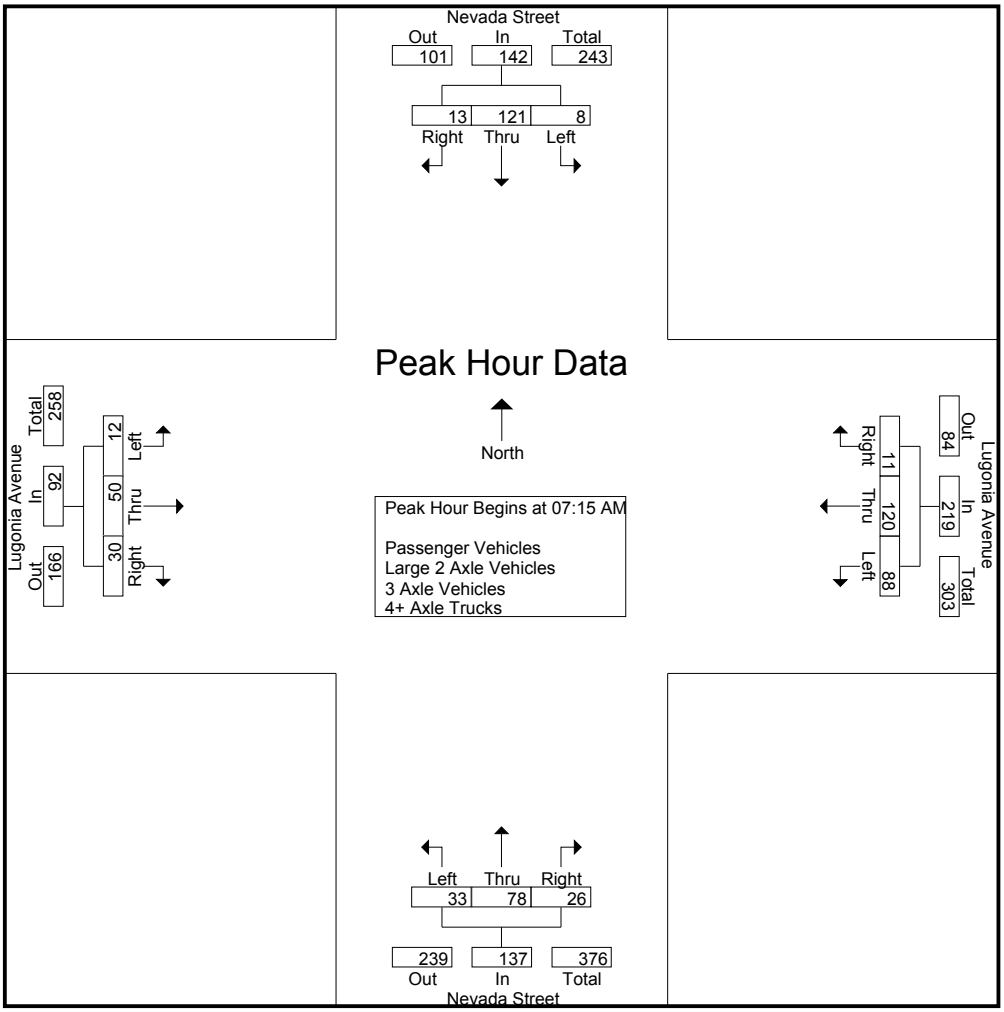

Peak Hour Analysis From 07:00 AM to 08:45 AM - Peak 1 of 1
Peak Hour for Each Approach Begins at:

	07:45 AM				07:30 AM				07:15 AM				07:15 AM			
+0 mins.	1	**41**	4	**46**	17	26	2	45	6	19	4	29	**6**	8	5	19
+15 mins.	3	37	**6**	46	**37**	**36**	**4**	**77**	5	19	4	28	1	13	**10**	24
+30 mins.	1	22	4	27	10	29	1	40	**14**	18	5	37	2	11	9	22
+45 mins.	**4**	27	3	34	32	27	0	59	8	**22**	**13**	**43**	3	**18**	6	**27**
Total Volume	9	127	17	153	96	118	7	221	33	78	26	137	12	50	30	92
% App. Total	5.9	83	11.1		43.4	53.4	3.2		24.1	56.9	19		13	54.3	32.6	
PHF	.563	.774	.708	.832	.649	.819	.438	.718	.589	.886	.500	.797	.500	.694	.750	.852

Counts Unlimited Inc.
PO Box 1178
Corona, CA 92878
(951) 268-6268

City of Redlands
N/S: Nevada Street
E/W: Lugonia Avenue
Weather: Sunny

File Name : REDNELUAM
Site Code : 00000125
Start Date : 2/9/2012
Page No : 1

Groups Printed- Passenger Vehicles

	Nevada Street Southbound				Lugonia Avenue Westbound				Nevada Street Northbound				Lugonia Avenue Eastbound				
Start Time	Left	Thru	Right	App. Total	Left	Thru	Right	App. Total	Left	Thru	Right	App. Total	Left	Thru	Right	App. Total	Int. Total
07:00 AM	0	15	6	21	10	25	3	38	0	12	7	19	2	8	2	12	90
07:15 AM	2	23	1	26	24	29	4	57	6	17	4	27	6	8	5	19	129
07:30 AM	2	19	2	23	17	26	2	45	5	19	4	28	1	13	10	24	120
07:45 AM	1	41	4	46	36	36	4	76	14	18	5	37	2	11	9	22	181
Total	5	98	13	116	87	116	13	216	25	66	20	111	11	40	26	77	520
08:00 AM	3	37	6	46	10	29	1	40	7	21	13	41	3	18	6	27	154
08:15 AM	1	21	4	26	32	27	0	59	2	16	8	26	0	10	2	12	123
08:30 AM	3	26	3	32	13	23	2	38	3	7	10	20	2	12	5	19	109
08:45 AM	3	29	0	32	25	20	2	47	4	9	15	28	0	11	3	14	121
Total	10	113	13	136	80	99	5	184	16	53	46	115	5	51	16	72	507
Grand Total	15	211	26	252	167	215	18	400	41	119	66	226	16	91	42	149	1027
Apprch %	6	83.7	10.3		41.8	53.8	4.5		18.1	52.7	29.2		10.7	61.1	28.2		
Total %	1.5	20.5	2.5	24.5	16.3	20.9	1.8	38.9	4	11.6	6.4	22	1.6	8.9	4.1	14.5	

	Nevada Street Southbound				Lugonia Avenue Westbound				Nevada Street Northbound				Lugonia Avenue Eastbound				
Start Time	Left	Thru	Right	App. Total	Left	Thru	Right	App. Total	Left	Thru	Right	App. Total	Left	Thru	Right	App. Total	Int. Total
Peak Hour Analysis From 07:15 AM to 08:00 AM - Peak 1 of 1																	
Peak Hour for Entire Intersection Begins at 07:15 AM																	
07:15 AM	2	23	1	26	24	29	**4**	57	6	17	4	27	**6**	8	5	19	129
07:30 AM	2	19	2	23	17	26	2	45	5	19	4	28	1	13	**10**	24	120
07:45 AM	1	**41**	4	**46**	**36**	**36**	4	**76**	**14**	18	5	37	2	11	9	22	**181**
08:00 AM	**3**	37	**6**	46	10	29	1	40	7	**21**	**13**	**41**	3	**18**	6	**27**	154
Total Volume	8	120	13	141	87	120	11	218	32	75	26	133	12	50	30	92	584
% App. Total	5.7	85.1	9.2		39.9	55	5		24.1	56.4	19.5		13	54.3	32.6		
PHF	.667	.732	.542	.766	.604	.833	.688	.717	.571	.893	.500	.811	.500	.694	.750	.852	.807

Counts Unlimited Inc.
PO Box 1178
Corona, CA 92878
(951) 268-6268

City of Redlands
N/S: Nevada Street
E/W: Lugonia Avenue
Weather: Sunny

File Name : REDNELUAM
Site Code : 00000125
Start Date : 2/9/2012
Page No : 2

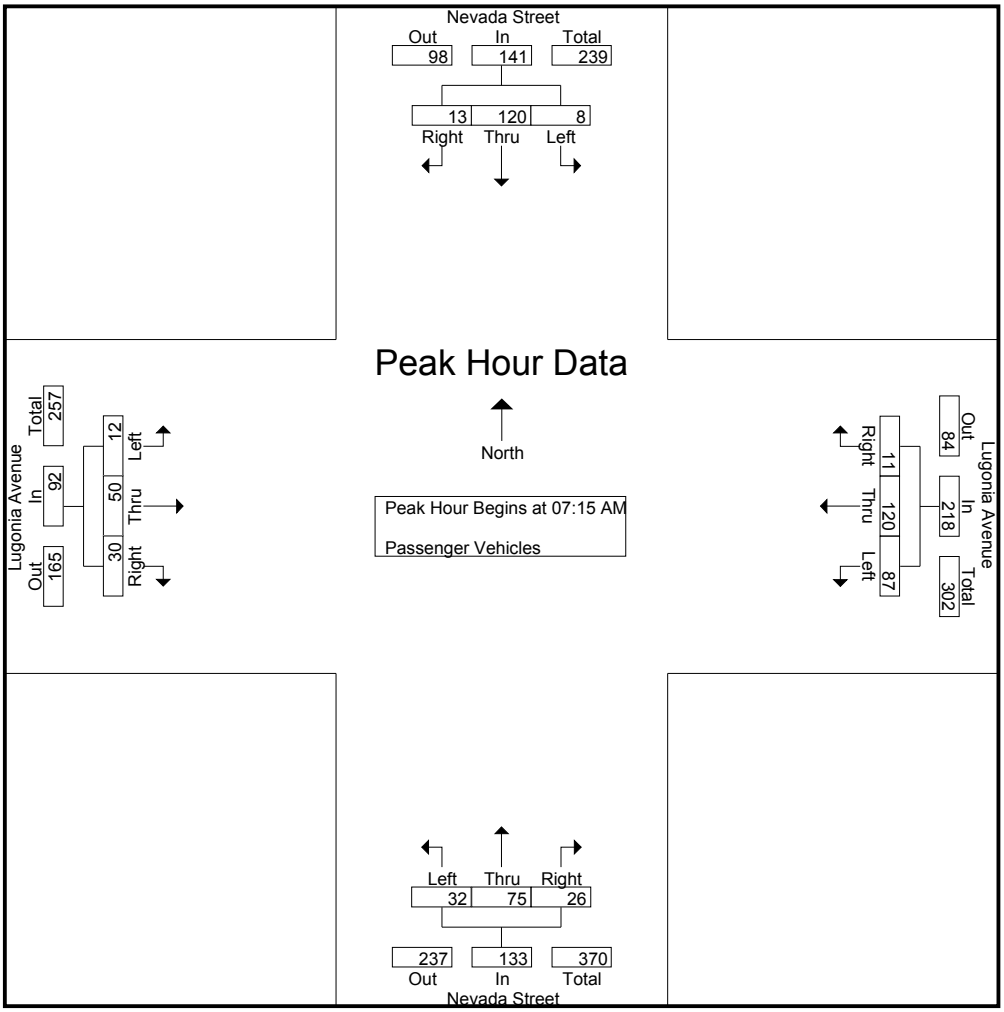

Peak Hour Analysis From 07:15 AM to 08:00 AM - Peak 1 of 1
Peak Hour for Each Approach Begins at:

	07:15 AM				07:15 AM				07:15 AM				07:15 AM			
+0 mins.	2	23	1	26	24	29	**4**	57	6	17	4	27	**6**	8	5	19
+15 mins.	2	19	2	23	17	26	2	45	5	19	4	28	1	13	**10**	24
+30 mins.	1	**41**	4	**46**	**36**	**36**	4	**76**	**14**	18	5	37	2	11	9	22
+45 mins.	**3**	37	**6**	46	10	29	1	40	7	**21**	**13**	**41**	3	**18**	6	**27**
Total Volume	8	120	13	141	87	120	11	218	32	75	26	133	12	50	30	92
% App. Total	5.7	85.1	9.2		39.9	55	5		24.1	56.4	19.5		13	54.3	32.6	
PHF	.667	.732	.542	.766	.604	.833	.688	.717	.571	.893	.500	.811	.500	.694	.750	.852

Counts Unlimited Inc.
PO Box 1178
Corona, CA 92878
(951) 268-6268

City of Redlands
N/S: Nevada Street
E/W: Lugonia Avenue
Weather: Sunny

File Name : REDNELUAM
Site Code : 00000125
Start Date : 2/9/2012
Page No : 1

Groups Printed- Large 2 Axle Vehicles

	Nevada Street Southbound				Lugonia Avenue Westbound				Nevada Street Northbound				Lugonia Avenue Eastbound				
Start Time	Left	Thru	Right	App. Total	Left	Thru	Right	App. Total	Left	Thru	Right	App. Total	Left	Thru	Right	App. Total	Int. Total
07:00 AM	0	0	0	0	0	0	0	0	0	0	0	0	0	0	0	0	0
07:15 AM	0	0	0	0	0	0	0	0	0	1	0	1	0	0	0	0	1
07:30 AM	0	1	0	1	0	0	0	0	0	0	0	0	0	0	0	0	1
07:45 AM	0	0	0	0	1	0	0	1	0	0	0	0	0	0	0	0	1
Total	0	1	0	1	1	0	0	1	0	1	0	1	0	0	0	0	3
08:00 AM	0	0	0	0	0	0	0	0	0	0	0	0	0	0	0	0	0
08:15 AM	0	1	0	1	0	0	0	0	1	0	0	1	0	0	1	1	3
08:30 AM	1	0	0	1	0	0	0	0	0	1	0	1	0	0	1	1	3
08:45 AM	0	0	0	0	0	0	0	0	0	0	0	0	0	0	1	1	1
Total	1	1	0	2	0	0	0	0	1	1	0	2	0	0	3	3	7
Grand Total	1	2	0	3	1	0	0	1	1	2	0	3	0	0	3	3	10
Apprch %	33.3	66.7	0		100	0	0		33.3	66.7	0		0	0	100		
Total %	10	20	0	30	10	0	0	10	10	20	0	30	0	0	30	30	

	Nevada Street Southbound				Lugonia Avenue Westbound				Nevada Street Northbound				Lugonia Avenue Eastbound				
Start Time	Left	Thru	Right	App. Total	Left	Thru	Right	App. Total	Left	Thru	Right	App. Total	Left	Thru	Right	App. Total	Int. Total
Peak Hour Analysis From 07:15 AM to 08:00 AM - Peak 1 of 1																	
Peak Hour for Entire Intersection Begins at 07:15 AM																	
07:15 AM	0	0	0	0	0	0	0	0	0	**1**	0	**1**	0	0	0	0	**1**
07:30 AM	0	**1**	0	**1**	0	0	0	0	0	0	0	0	0	0	0	0	1
07:45 AM	0	0	0	0	**1**	0	0	**1**	0	0	0	0	0	0	0	0	1
08:00 AM	0	0	0	0	0	0	0	0	0	0	0	0	0	0	0	0	0
Total Volume	0	1	0	1	1	0	0	1	0	1	0	1	0	0	0	0	3
% App. Total	0	100	0		100	0	0		0	100	0		0	0	0		
PHF	.000	.250	.000	.250	.250	.000	.000	.250	.000	.250	.000	.250	.000	.000	.000	.000	.750

Counts Unlimited Inc.
PO Box 1178
Corona, CA 92878
(951) 268-6268

City of Redlands
N/S: Nevada Street
E/W: Lugonia Avenue
Weather: Sunny

File Name : REDNELUAM
Site Code : 00000125
Start Date : 2/9/2012
Page No : 2

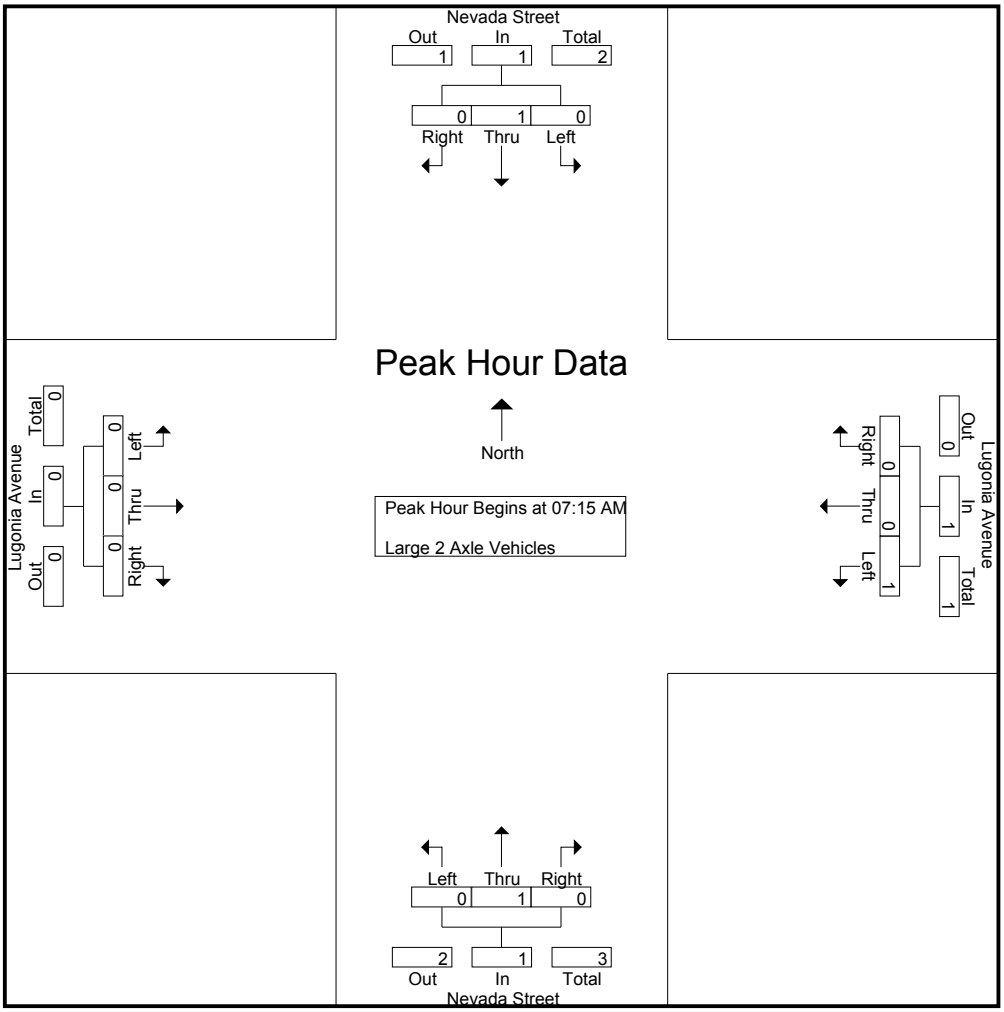

Peak Hour Analysis From 07:15 AM to 08:00 AM - Peak 1 of 1
Peak Hour for Each Approach Begins at:

	07:15 AM				07:15 AM				07:15 AM				07:15 AM			
+0 mins.	0	0	0	0	0	0	0	0	0	**1**	0	**1**	0	0	0	0
+15 mins.	0	**1**	0	**1**	0	0	0	0	0	0	0	0	0	0	0	0
+30 mins.	0	0	0	0	**1**	0	0	**1**	0	0	0	0	0	0	0	0
+45 mins.	0	0	0	0	0	0	0	0	0	0	0	0	0	0	0	0
Total Volume	0	1	0	1	1	0	0	1	0	1	0	1	0	0	0	0
% App. Total	0	100	0		100	0	0		0	100	0		0	0	0	
PHF	.000	.250	.000	.250	.250	.000	.000	.250	.000	.250	.000	.250	.000	.000	.000	.000

Counts Unlimited Inc.
PO Box 1178
Corona, CA 92878
(951) 268-6268

City of Redlands
N/S: Nevada Street
E/W: Lugonia Avenue
Weather: Sunny

File Name : REDNELUAM
Site Code : 00000125
Start Date : 2/9/2012
Page No : 1

Groups Printed- 3 Axle Vehicles

	Nevada Street Southbound				Lugonia Avenue Westbound				Nevada Street Northbound				Lugonia Avenue Eastbound				
Start Time	Left	Thru	Right	App. Total	Left	Thru	Right	App. Total	Left	Thru	Right	App. Total	Left	Thru	Right	App. Total	Int. Total
07:00 AM	0	1	0	1	0	0	0	0	0	0	0	0	0	0	0	0	1
07:15 AM	0	0	0	0	0	0	0	0	0	0	0	0	0	0	0	0	0
07:30 AM	0	0	0	0	0	0	0	0	0	0	0	0	0	0	0	0	0
07:45 AM	0	0	0	0	0	0	0	0	0	0	0	0	0	0	0	0	0
Total	0	1	0	1	0	0	0	0	0	0	0	0	0	0	0	0	1
08:00 AM	0	0	0	0	0	0	0	0	1	1	0	2	0	0	0	0	2
08:15 AM	0	0	0	0	0	0	0	0	0	0	0	0	0	1	0	1	1
08:30 AM	0	1	0	1	0	0	0	0	0	1	0	1	0	0	0	0	2
08:45 AM	0	1	0	1	0	0	0	0	0	1	0	1	0	0	0	0	2
Total	0	2	0	2	0	0	0	0	1	3	0	4	0	1	0	1	7
Grand Total	0	3	0	3	0	0	0	0	1	3	0	4	0	1	0	1	8
Apprch %	0	100	0		0	0	0		25	75	0		0	100	0		
Total %	0	37.5	0	37.5	0	0	0	0	12.5	37.5	0	50	0	12.5	0	12.5	

	Nevada Street Southbound				Lugonia Avenue Westbound				Nevada Street Northbound				Lugonia Avenue Eastbound				
Start Time	Left	Thru	Right	App. Total	Left	Thru	Right	App. Total	Left	Thru	Right	App. Total	Left	Thru	Right	App. Total	Int. Total
Peak Hour Analysis From 07:15 AM to 08:00 AM - Peak 1 of 1																	
Peak Hour for Entire Intersection Begins at 07:15 AM																	
07:15 AM	0	0	0	0	0	0	0	0	0	0	0	0	0	0	0	0	0
07:30 AM	0	0	0	0	0	0	0	0	0	0	0	0	0	0	0	0	0
07:45 AM	0	0	0	0	0	0	0	0	0	0	0	0	0	0	0	0	0
08:00 AM	0	0	0	0	0	0	0	0	**1**	**1**	0	**2**	0	0	0	0	**2**
Total Volume	0	0	0	0	0	0	0	0	1	1	0	2	0	0	0	0	2
% App. Total	0	0	0		0	0	0		50	50	0		0	0	0		
PHF	.000	.000	.000	.000	.000	.000	.000	.000	.250	.250	.000	.250	.000	.000	.000	.000	.250

Counts Unlimited Inc.
PO Box 1178
Corona, CA 92878
(951) 268-6268

City of Redlands
N/S: Nevada Street
E/W: Lugonia Avenue
Weather: Sunny

File Name : REDNELUAM
Site Code : 00000125
Start Date : 2/9/2012
Page No : 2

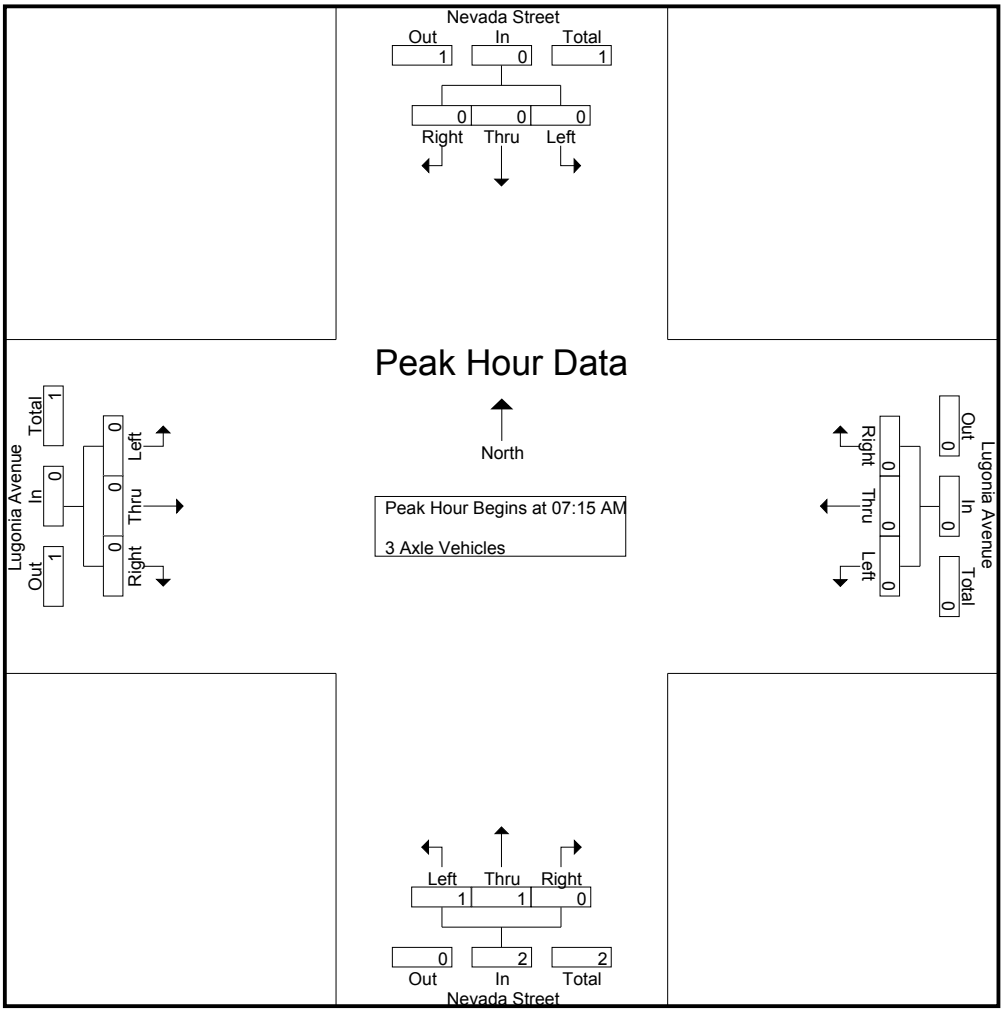

Peak Hour Analysis From 07:15 AM to 08:00 AM - Peak 1 of 1
Peak Hour for Each Approach Begins at:

	07:15 AM				07:15 AM				07:15 AM				07:15 AM			
+0 mins.	0	0	0	0	0	0	0	0	0	0	0	0	0	0	0	0
+15 mins.	0	0	0	0	0	0	0	0	0	0	0	0	0	0	0	0
+30 mins.	0	0	0	0	0	0	0	0	0	0	0	0	0	0	0	0
+45 mins.	0	0	0	0	0	0	0	0	**1**	**1**	0	**2**	0	0	0	0
Total Volume	0	0	0	0	0	0	0	0	1	1	0	2	0	0	0	0
% App. Total	0	0	0		0	0	0		50	50	0		0	0	0	
PHF	.000	.000	.000	.000	.000	.000	.000	.000	.250	.250	.000	.250	.000	.000	.000	.000

Counts Unlimited Inc.
PO Box 1178
Corona, CA 92878
(951) 268-6268

City of Redlands
N/S: Nevada Street
E/W: Lugonia Avenue
Weather: Sunny

File Name : REDNELUAM
Site Code : 00000125
Start Date : 2/9/2012
Page No : 1

Groups Printed- 4+ Axle Trucks

	Nevada Street Southbound				Lugonia Avenue Westbound				Nevada Street Northbound				Lugonia Avenue Eastbound				
Start Time	Left	Thru	Right	App. Total	Left	Thru	Right	App. Total	Left	Thru	Right	App. Total	Left	Thru	Right	App. Total	Int. Total
07:00 AM	0	0	0	0	0	0	0	0	0	0	0	0	0	0	0	0	0
07:15 AM	0	0	0	0	0	0	0	0	0	1	0	1	0	0	0	0	1
07:30 AM	0	0	0	0	0	0	0	0	0	0	0	0	0	0	0	0	0
07:45 AM	0	0	0	0	0	0	0	0	0	0	0	0	0	0	0	0	0
Total	0	0	0	0	0	0	0	0	0	1	0	1	0	0	0	0	1
08:00 AM	0	0	0	0	0	0	0	0	0	0	0	0	0	0	0	0	0
08:15 AM	0	0	0	0	0	0	0	0	1	0	0	1	0	0	0	0	1
08:30 AM	0	0	0	0	0	0	0	0	0	0	0	0	0	0	0	0	0
08:45 AM	0	1	0	1	0	0	0	0	0	0	0	0	0	0	0	0	1
Total	0	1	0	1	0	0	0	0	1	0	0	1	0	0	0	0	2
Grand Total	0	1	0	1	0	0	0	0	1	1	0	2	0	0	0	0	3
Apprch %	0	100	0		0	0	0		50	50	0		0	0	0		
Total %	0	33.3	0	33.3	0	0	0	0	33.3	33.3	0	66.7	0	0	0	0	

	Nevada Street Southbound				Lugonia Avenue Westbound				Nevada Street Northbound				Lugonia Avenue Eastbound				
Start Time	Left	Thru	Right	App. Total	Left	Thru	Right	App. Total	Left	Thru	Right	App. Total	Left	Thru	Right	App. Total	Int. Total
Peak Hour Analysis From 07:15 AM to 08:00 AM - Peak 1 of 1																	
Peak Hour for Entire Intersection Begins at 07:15 AM																	
07:15 AM	0	0	0	0	0	0	0	0	0	**1**	0	**1**	0	0	0	0	**1**
07:30 AM	0	0	0	0	0	0	0	0	0	0	0	0	0	0	0	0	0
07:45 AM	0	0	0	0	0	0	0	0	0	0	0	0	0	0	0	0	0
08:00 AM	0	0	0	0	0	0	0	0	0	0	0	0	0	0	0	0	0
Total Volume	0	0	0	0	0	0	0	0	0	1	0	1	0	0	0	0	1
% App. Total	0	0	0		0	0	0		0	100	0		0	0	0		
PHF	.000	.000	.000	.000	.000	.000	.000	.000	.000	.250	.000	.250	.000	.000	.000	.000	.250

Counts Unlimited Inc.
PO Box 1178
Corona, CA 92878
(951) 268-6268

City of Redlands
N/S: Nevada Street
E/W: Lugonia Avenue
Weather: Sunny

File Name : REDNELUAM
Site Code : 00000125
Start Date : 2/9/2012
Page No : 2

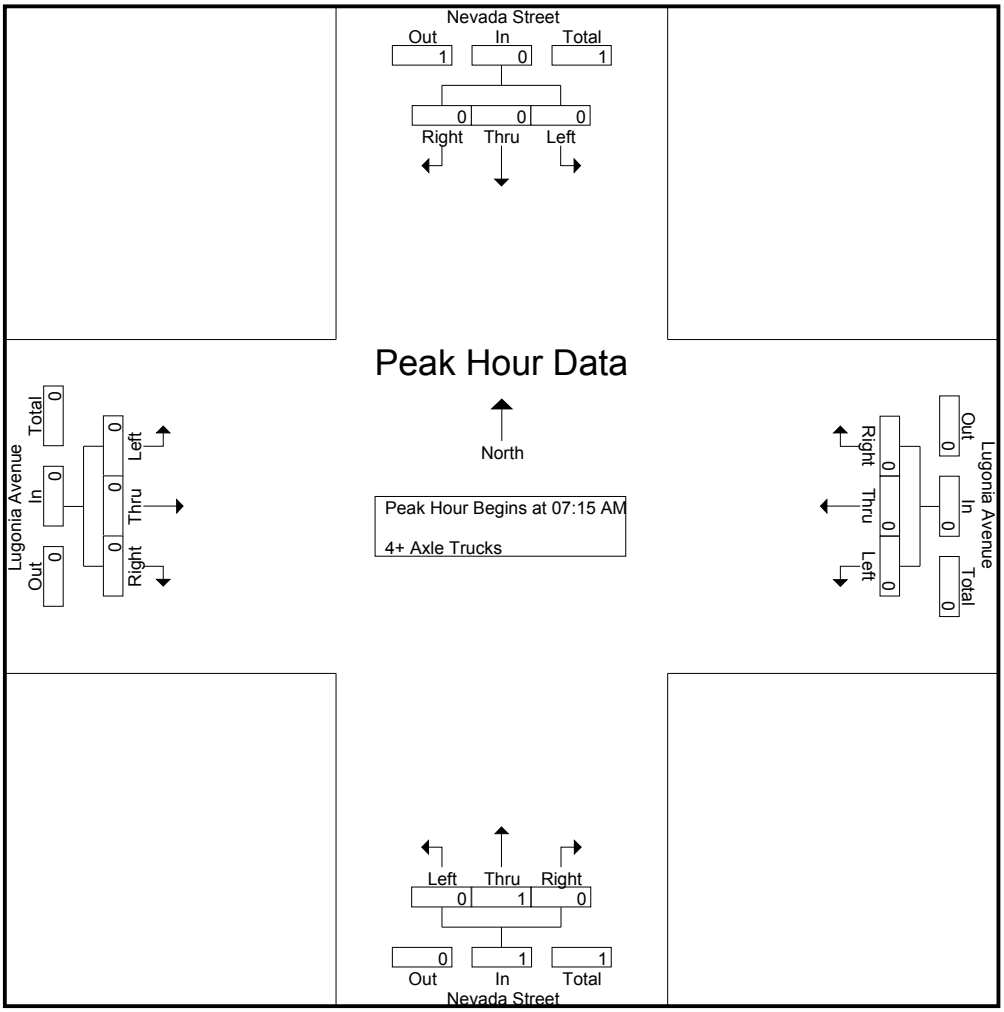

Peak Hour Analysis From 07:15 AM to 08:00 AM - Peak 1 of 1
Peak Hour for Each Approach Begins at:

	07:15 AM				07:15 AM				07:15 AM				07:15 AM			
+0 mins.	0	0	0	0	0	0	0	0	0	**1**	0	**1**	0	0	0	0
+15 mins.	0	0	0	0	0	0	0	0	0	0	0	0	0	0	0	0
+30 mins.	0	0	0	0	0	0	0	0	0	0	0	0	0	0	0	0
+45 mins.	0	0	0	0	0	0	0	0	0	0	0	0	0	0	0	0
Total Volume	0	0	0	0	0	0	0	0	0	1	0	1	0	0	0	0
% App. Total	0	0	0		0	0	0		0	100	0		0	0	0	
PHF	.000	.000	.000	.000	.000	.000	.000	.000	.000	.250	.000	.250	.000	.000	.000	.000

Counts Unlimited Inc.
PO Box 1178
Corona, CA 92878
(951) 268-6268

City of Redlands
N/S: Nevada Street
E/W: Lugonia Avenue
Weather: Sunny

File Name : REDNELUPM
Site Code : 00000125
Start Date : 2/9/2012
Page No : 1

Groups Printed- Passenger Vehicles - Large 2 Axle Vehicles - 3 Axle Vehicles - 4+ Axle Trucks

	Nevada Street Southbound				Lugonia Avenue Westbound				Nevada Street Northbound				Lugonia Avenue Eastbound				
Start Time	Left	Thru	Right	App. Total	Left	Thru	Right	App. Total	Left	Thru	Right	App. Total	Left	Thru	Right	App. Total	Int. Total
04:00 PM	4	29	0	33	29	32	2	63	3	23	25	51	1	52	6	59	206
04:15 PM	9	30	2	41	26	40	2	68	4	33	30	67	5	43	12	60	236
04:30 PM	6	29	1	36	28	44	3	75	1	28	43	72	10	51	13	74	257
04:45 PM	2	35	0	37	32	28	1	61	6	46	43	95	5	39	7	51	244
Total	21	123	3	147	115	144	8	267	14	130	141	285	21	185	38	244	943
05:00 PM	4	37	1	42	33	42	3	78	6	59	51	116	3	57	13	73	309
05:15 PM	5	28	0	33	25	38	0	63	2	43	39	84	1	43	6	50	230
05:30 PM	4	23	0	27	25	30	1	56	2	29	29	60	4	38	13	55	198
05:45 PM	1	23	0	24	23	40	7	70	3	20	41	64	1	30	2	33	191
Total	14	111	1	126	106	150	11	267	13	151	160	324	9	168	34	211	928
Grand Total	35	234	4	273	221	294	19	534	27	281	301	609	30	353	72	455	1871
Apprch %	12.8	85.7	1.5		41.4	55.1	3.6		4.4	46.1	49.4		6.6	77.6	15.8		
Total %	1.9	12.5	0.2	14.6	11.8	15.7	1	28.5	1.4	15	16.1	32.5	1.6	18.9	3.8	24.3	
Passenger Vehicles	35	232	3	270	221	292	19	532	25	278	301	604	29	350	69	448	1854
% Passenger Vehicles	100	99.1	75	98.9	100	99.3	100	99.6	92.6	98.9	100	99.2	96.7	99.2	95.8	98.5	99.1
Large 2 Axle Vehicles	0	2	1	3	0	2	0	2	2	2	0	4	1	2	2	5	14
% Large 2 Axle Vehicles	0	0.9	25	1.1	0	0.7	0	0.4	7.4	0.7	0	0.7	3.3	0.6	2.8	1.1	0.7
3 Axle Vehicles	0	0	0	0	0	0	0	0	0	1	0	1	0	1	1	2	3
% 3 Axle Vehicles	0	0	0	0	0	0	0	0	0	0.4	0	0.2	0	0.3	1.4	0.4	0.2
4+ Axle Trucks	0	0	0	0	0	0	0	0	0	0	0	0	0	0	0	0	0
% 4+ Axle Trucks	0	0	0	0	0	0	0	0	0	0	0	0	0	0	0	0	0

	Nevada Street Southbound				Lugonia Avenue Westbound				Nevada Street Northbound				Lugonia Avenue Eastbound				
Start Time	Left	Thru	Right	App. Total	Left	Thru	Right	App. Total	Left	Thru	Right	App. Total	Left	Thru	Right	App. Total	Int. Total
Peak Hour Analysis From 04:00 PM to 05:45 PM - Peak 1 of 1																	
Peak Hour for Entire Intersection Begins at 04:15 PM																	
04:15 PM	**9**	30	**2**	41	26	40	2	68	4	33	30	67	5	43	12	60	236
04:30 PM	6	29	1	36	28	**44**	**3**	75	1	28	43	72	**10**	51	**13**	**74**	257
04:45 PM	2	35	0	37	32	28	1	61	**6**	46	43	95	5	39	7	51	244
05:00 PM	4	**37**	1	**42**	**33**	42	3	**78**	6	**59**	**51**	**116**	3	**57**	13	73	**309**
Total Volume	21	131	4	156	119	154	9	282	17	166	167	350	23	190	45	258	1046
% App. Total	13.5	84	2.6		42.2	54.6	3.2		4.9	47.4	47.7		8.9	73.6	17.4		
PHF	.583	.885	.500	.929	.902	.875	.750	.904	.708	.703	.819	.754	.575	.833	.865	.872	.846

Counts Unlimited Inc.
PO Box 1178
Corona, CA 92878
(951) 268-6268

City of Redlands
N/S: Nevada Street
E/W: Lugonia Avenue
Weather: Sunny

File Name : REDNELUPM
Site Code : 00000125
Start Date : 2/9/2012
Page No : 2

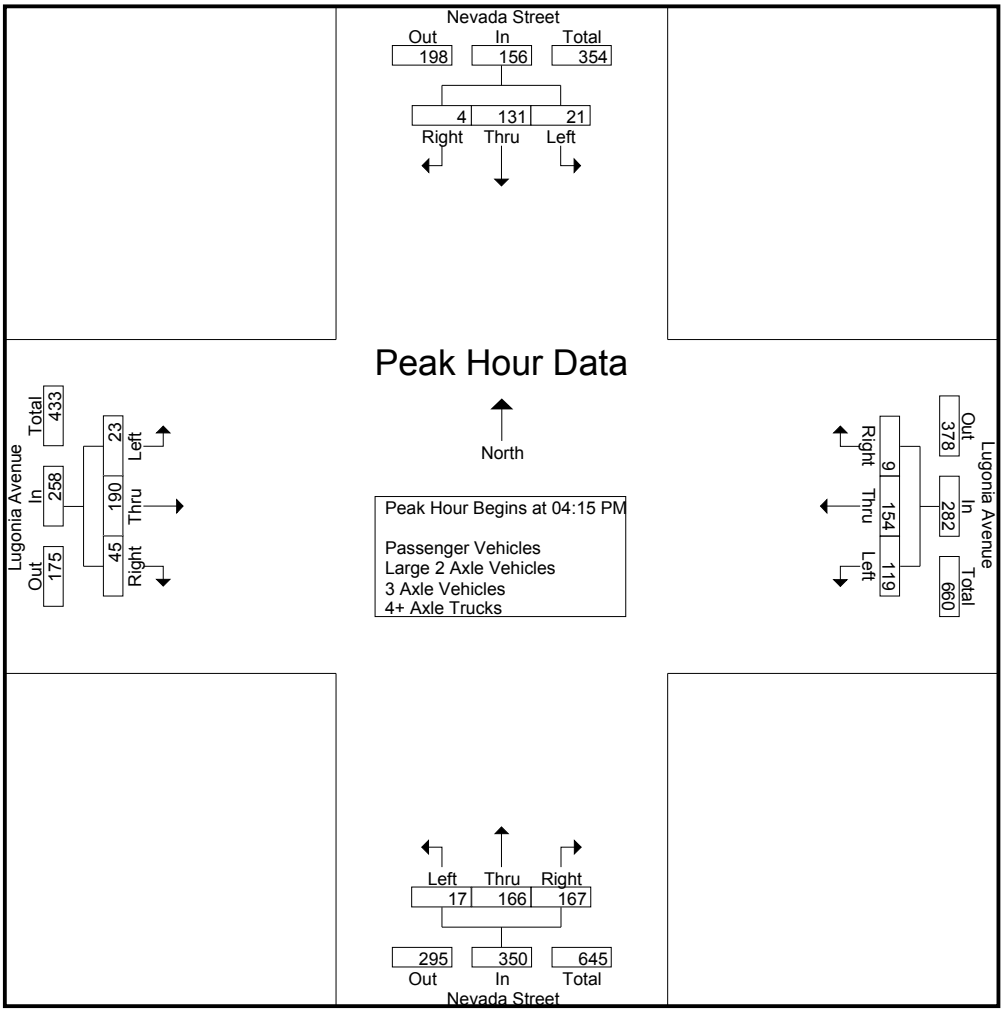

Peak Hour Analysis From 04:00 PM to 05:45 PM - Peak 1 of 1
Peak Hour for Each Approach Begins at:

	04:15 PM				04:15 PM				04:30 PM				04:15 PM			
+0 mins.	**9**	30	**2**	41	26	40	2	68	1	28	43	72	5	43	12	60
+15 mins.	6	29	1	36	28	**44**	**3**	75	**6**	46	43	95	**10**	51	**13**	**74**
+30 mins.	2	35	0	37	32	28	1	61	6	**59**	**51**	**116**	5	39	7	51
+45 mins.	4	**37**	1	**42**	**33**	42	3	**78**	2	43	39	84	3	**57**	13	73
Total Volume	21	131	4	156	119	154	9	282	15	176	176	367	23	190	45	258
% App. Total	13.5	84	2.6		42.2	54.6	3.2		4.1	48	48		8.9	73.6	17.4	
PHF	.583	.885	.500	.929	.902	.875	.750	.904	.625	.746	.863	.791	.575	.833	.865	.872

Counts Unlimited Inc.
PO Box 1178
Corona, CA 92878
(951) 268-6268

City of Redlands
N/S: Nevada Street
E/W: Lugonia Avenue
Weather: Sunny

File Name : REDNELUPM
Site Code : 00000125
Start Date : 2/9/2012
Page No : 1

Groups Printed- Passenger Vehicles

	Nevada Street Southbound				Lugonia Avenue Westbound				Nevada Street Northbound				Lugonia Avenue Eastbound				
Start Time	Left	Thru	Right	App. Total	Left	Thru	Right	App. Total	Left	Thru	Right	App. Total	Left	Thru	Right	App. Total	Int. Total
04:00 PM	4	29	0	33	29	32	2	63	3	22	25	50	1	52	6	59	205
04:15 PM	9	29	1	39	26	39	2	67	3	33	30	66	5	42	12	59	231
04:30 PM	6	29	1	36	28	44	3	75	1	26	43	70	10	51	12	73	254
04:45 PM	2	35	0	37	32	28	1	61	5	46	43	94	5	39	6	50	242
Total	21	122	2	145	115	143	8	266	12	127	141	280	21	184	36	241	932
05:00 PM	4	36	1	41	33	42	3	78	6	59	51	116	3	57	13	73	308
05:15 PM	5	28	0	33	25	38	0	63	2	43	39	84	1	43	5	49	229
05:30 PM	4	23	0	27	25	30	1	56	2	29	29	60	3	37	13	53	196
05:45 PM	1	23	0	24	23	39	7	69	3	20	41	64	1	29	2	32	189
Total	14	110	1	125	106	149	11	266	13	151	160	324	8	166	33	207	922
Grand Total	35	232	3	270	221	292	19	532	25	278	301	604	29	350	69	448	1854
Apprch %	13	85.9	1.1		41.5	54.9	3.6		4.1	46	49.8		6.5	78.1	15.4		
Total %	1.9	12.5	0.2	14.6	11.9	15.7	1	28.7	1.3	15	16.2	32.6	1.6	18.9	3.7	24.2	

	Nevada Street Southbound				Lugonia Avenue Westbound				Nevada Street Northbound				Lugonia Avenue Eastbound				
Start Time	Left	Thru	Right	App. Total	Left	Thru	Right	App. Total	Left	Thru	Right	App. Total	Left	Thru	Right	App. Total	Int. Total
Peak Hour Analysis From 04:15 PM to 05:00 PM - Peak 1 of 1																	
Peak Hour for Entire Intersection Begins at 04:15 PM																	
04:15 PM	**9**	29	**1**	39	26	39	2	67	3	33	30	66	5	42	12	59	231
04:30 PM	6	29	1	36	28	**44**	**3**	75	1	26	43	70	**10**	51	12	**73**	254
04:45 PM	2	35	0	37	32	28	1	61	5	46	43	94	5	39	6	50	242
05:00 PM	4	**36**	1	**41**	**33**	42	3	**78**	**6**	**59**	**51**	**116**	3	**57**	**13**	73	**308**
Total Volume	21	129	3	153	119	153	9	281	15	164	167	346	23	189	43	255	1035
% App. Total	13.7	84.3	2		42.3	54.4	3.2		4.3	47.4	48.3		9	74.1	16.9		
PHF	.583	.896	.750	.933	.902	.869	.750	.901	.625	.695	.819	.746	.575	.829	.827	.873	.840

Counts Unlimited Inc.
PO Box 1178
Corona, CA 92878
(951) 268-6268

City of Redlands
N/S: Nevada Street
E/W: Lugonia Avenue
Weather: Sunny

File Name : REDNELUPM
Site Code : 00000125
Start Date : 2/9/2012
Page No : 2

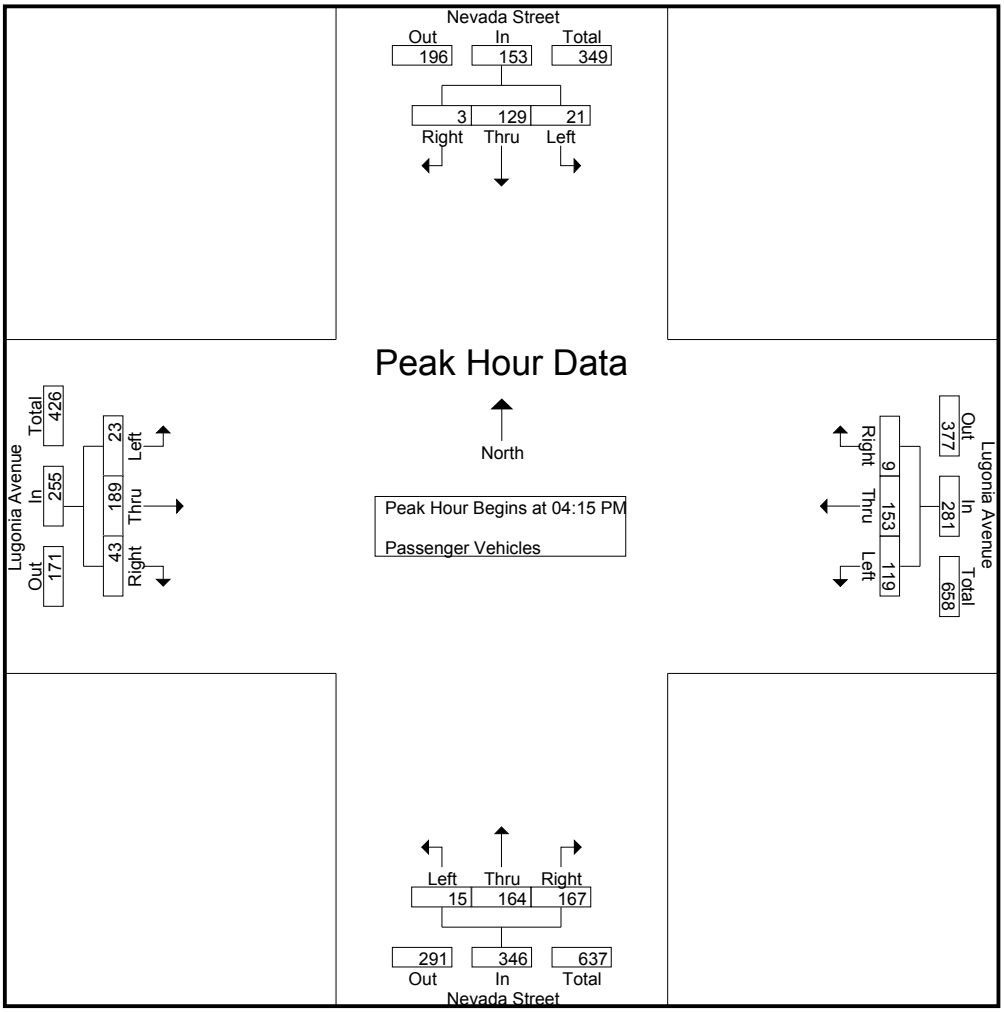

Peak Hour Analysis From 04:15 PM to 05:00 PM - Peak 1 of 1
Peak Hour for Each Approach Begins at:

	04:15 PM				04:15 PM				04:15 PM				04:15 PM			
+0 mins.	**9**	29	**1**	39	26	39	2	67	3	33	30	66	5	42	12	59
+15 mins.	6	29	1	36	28	**44**	**3**	75	1	26	43	70	**10**	51	12	**73**
+30 mins.	2	35	0	37	32	28	1	61	5	46	43	94	5	39	6	50
+45 mins.	4	**36**	1	**41**	**33**	42	3	**78**	**6**	**59**	**51**	**116**	3	**57**	**13**	73
Total Volume	21	129	3	153	119	153	9	281	15	164	167	346	23	189	43	255
% App. Total	13.7	84.3	2		42.3	54.4	3.2		4.3	47.4	48.3		9	74.1	16.9	
PHF	.583	.896	.750	.933	.902	.869	.750	.901	.625	.695	.819	.746	.575	.829	.827	.873

Counts Unlimited Inc.
PO Box 1178
Corona, CA 92878
(951) 268-6268

City of Redlands
N/S: Nevada Street
E/W: Lugonia Avenue
Weather: Sunny

File Name : REDNELUPM
Site Code : 00000125
Start Date : 2/9/2012
Page No : 1

Groups Printed- Large 2 Axle Vehicles

	Nevada Street Southbound				Lugonia Avenue Westbound				Nevada Street Northbound				Lugonia Avenue Eastbound				
Start Time	Left	Thru	Right	App. Total	Left	Thru	Right	App. Total	Left	Thru	Right	App. Total	Left	Thru	Right	App. Total	Int. Total
04:00 PM	0	0	0	0	0	0	0	0	0	0	0	0	0	0	0	0	0
04:15 PM	0	1	1	2	0	1	0	1	1	0	0	1	0	1	0	1	5
04:30 PM	0	0	0	0	0	0	0	0	0	2	0	2	0	0	1	1	3
04:45 PM	0	0	0	0	0	0	0	0	1	0	0	1	0	0	0	0	1
Total	0	1	1	2	0	1	0	1	2	2	0	4	0	1	1	2	9
05:00 PM	0	1	0	1	0	0	0	0	0	0	0	0	0	0	0	0	1
05:15 PM	0	0	0	0	0	0	0	0	0	0	0	0	0	0	1	1	1
05:30 PM	0	0	0	0	0	0	0	0	0	0	0	0	1	1	0	2	2
05:45 PM	0	0	0	0	0	1	0	1	0	0	0	0	0	0	0	0	1
Total	0	1	0	1	0	1	0	1	0	0	0	0	1	1	1	3	5
Grand Total	0	2	1	3	0	2	0	2	2	2	0	4	1	2	2	5	14
Apprch %	0	66.7	33.3		0	100	0		50	50	0		20	40	40		
Total %	0	14.3	7.1	21.4	0	14.3	0	14.3	14.3	14.3	0	28.6	7.1	14.3	14.3	35.7	

	Nevada Street Southbound				Lugonia Avenue Westbound				Nevada Street Northbound				Lugonia Avenue Eastbound				
Start Time	Left	Thru	Right	App. Total	Left	Thru	Right	App. Total	Left	Thru	Right	App. Total	Left	Thru	Right	App. Total	Int. Total
Peak Hour Analysis From 04:15 PM to 05:00 PM - Peak 1 of 1																	
Peak Hour for Entire Intersection Begins at 04:15 PM																	
04:15 PM	0	**1**	**1**	**2**	0	**1**	0	**1**	**1**	0	0	1	0	**1**	0	**1**	**5**
04:30 PM	0	0	0	0	0	0	0	0	0	**2**	0	**2**	0	0	**1**	1	3
04:45 PM	0	0	0	0	0	0	0	0	1	0	0	1	0	0	0	0	1
05:00 PM	0	1	0	1	0	0	0	0	0	0	0	0	0	0	0	0	1
Total Volume	0	2	1	3	0	1	0	1	2	2	0	4	0	1	1	2	10
% App. Total	0	66.7	33.3		0	100	0		50	50	0		0	50	50		
PHF	.000	.500	.250	.375	.000	.250	.000	.250	.500	.250	.000	.500	.000	.250	.250	.500	.500

Counts Unlimited Inc.
PO Box 1178
Corona, CA 92878
(951) 268-6268

City of Redlands
N/S: Nevada Street
E/W: Lugonia Avenue
Weather: Sunny

File Name : REDNELUPM
Site Code : 00000125
Start Date : 2/9/2012
Page No : 2

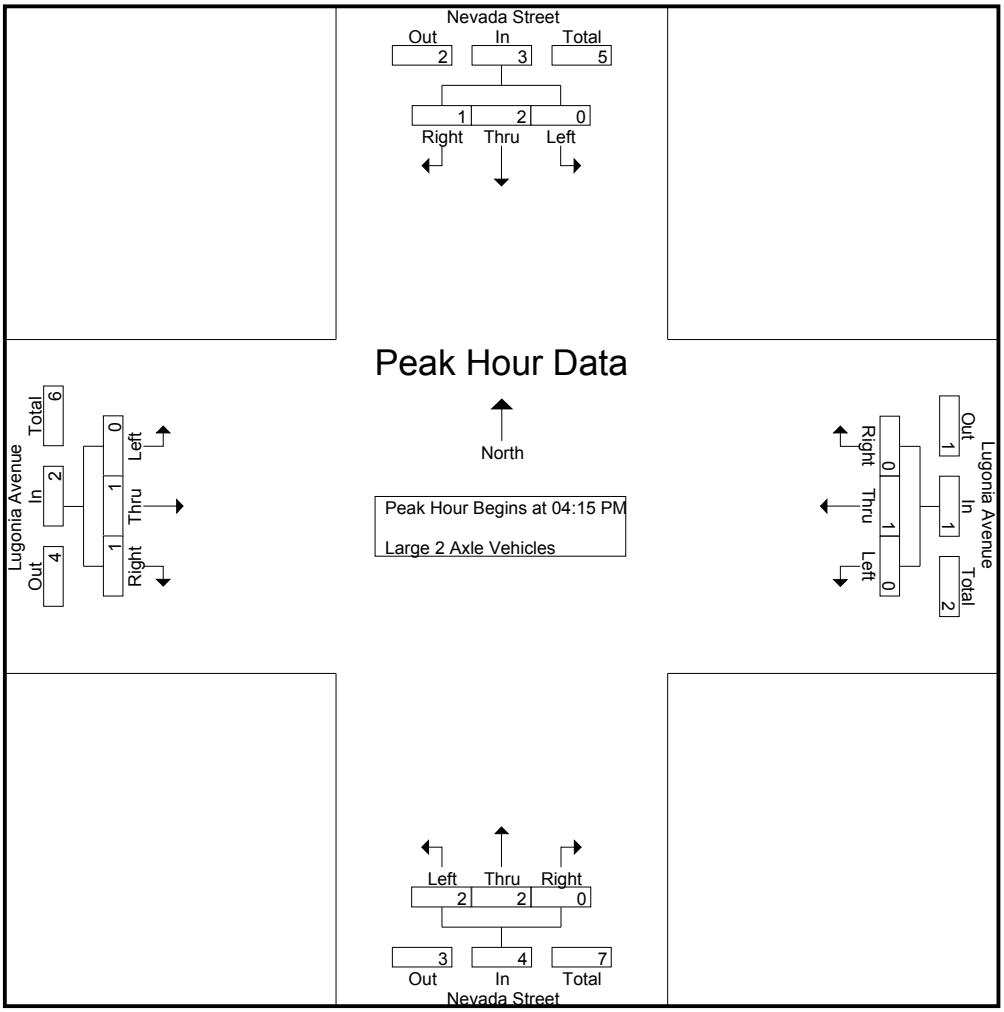

Peak Hour Analysis From 04:15 PM to 05:00 PM - Peak 1 of 1
Peak Hour for Each Approach Begins at:

	04:15 PM				04:15 PM				04:15 PM				04:15 PM			
+0 mins.	0	**1**	**1**	**2**	0	**1**	0	**1**	**1**	0	0	1	0	**1**	0	**1**
+15 mins.	0	0	0	0	0	0	0	0	0	**2**	0	**2**	0	0	**1**	1
+30 mins.	0	0	0	0	0	0	0	0	1	0	0	1	0	0	0	0
+45 mins.	0	1	0	1	0	0	0	0	0	0	0	0	0	0	0	0
Total Volume	0	2	1	3	0	1	0	1	2	2	0	4	0	1	1	2
% App. Total	0	66.7	33.3		0	100	0		50	50	0		0	50	50	
PHF	.000	.500	.250	.375	.000	.250	.000	.250	.500	.250	.000	.500	.000	.250	.250	.500

Counts Unlimited Inc.
PO Box 1178
Corona, CA 92878
(951) 268-6268

City of Redlands
N/S: Nevada Street
E/W: Lugonia Avenue
Weather: Sunny

File Name : REDNELUPM
Site Code : 00000125
Start Date : 2/9/2012
Page No : 1

Groups Printed- 3 Axle Vehicles

	Nevada Street Southbound				Lugonia Avenue Westbound				Nevada Street Northbound				Lugonia Avenue Eastbound				
Start Time	Left	Thru	Right	App. Total	Left	Thru	Right	App. Total	Left	Thru	Right	App. Total	Left	Thru	Right	App. Total	Int. Total
04:00 PM	0	0	0	0	0	0	0	0	0	1	0	1	0	0	0	0	1
04:15 PM	0	0	0	0	0	0	0	0	0	0	0	0	0	0	0	0	0
04:30 PM	0	0	0	0	0	0	0	0	0	0	0	0	0	0	0	0	0
04:45 PM	0	0	0	0	0	0	0	0	0	0	0	0	0	0	1	1	1
Total	0	0	0	0	0	0	0	0	0	1	0	1	0	0	1	1	2
05:00 PM	0	0	0	0	0	0	0	0	0	0	0	0	0	0	0	0	0
05:15 PM	0	0	0	0	0	0	0	0	0	0	0	0	0	0	0	0	0
05:30 PM	0	0	0	0	0	0	0	0	0	0	0	0	0	0	0	0	0
05:45 PM	0	0	0	0	0	0	0	0	0	0	0	0	0	0	0	0	0
Total	0	0	0	0	0	0	0	0	0	0	0	0	0	0	0	0	0
Grand Total	0	0	0	0	0	0	0	0	0	1	0	1	0	0	1	1	2
Apprch %	0	0	0		0	0	0		0	100	0		0	0	100		
Total %	0	0	0	0	0	0	0	0	0	50	0	50	0	0	50	50	

	Nevada Street Southbound				Lugonia Avenue Westbound				Nevada Street Northbound				Lugonia Avenue Eastbound				
Start Time	Left	Thru	Right	App. Total	Left	Thru	Right	App. Total	Left	Thru	Right	App. Total	Left	Thru	Right	App. Total	Int. Total
Peak Hour Analysis From 04:15 PM to 05:00 PM - Peak 1 of 1																	
Peak Hour for Entire Intersection Begins at 04:15 PM																	
04:15 PM	0	0	0	0	0	0	0	0	0	0	0	0	0	0	0	0	0
04:30 PM	0	0	0	0	0	0	0	0	0	0	0	0	0	0	0	0	0
04:45 PM	0	0	0	0	0	0	0	0	0	0	0	0	0	0	**1**	**1**	**1**
05:00 PM	0	0	0	0	0	0	0	0	0	0	0	0	0	0	0	0	0
Total Volume	0	0	0	0	0	0	0	0	0	0	0	0	0	0	1	1	1
% App. Total	0	0	0		0	0	0		0	0	0		0	0	100		
PHF	.000	.000	.000	.000	.000	.000	.000	.000	.000	.000	.000	.000	.000	.000	.250	.250	.250

Counts Unlimited Inc.
PO Box 1178
Corona, CA 92878
(951) 268-6268

City of Redlands
N/S: Nevada Street
E/W: Lugonia Avenue
Weather: Sunny

File Name : REDNELUPM
Site Code : 00000125
Start Date : 2/9/2012
Page No : 2

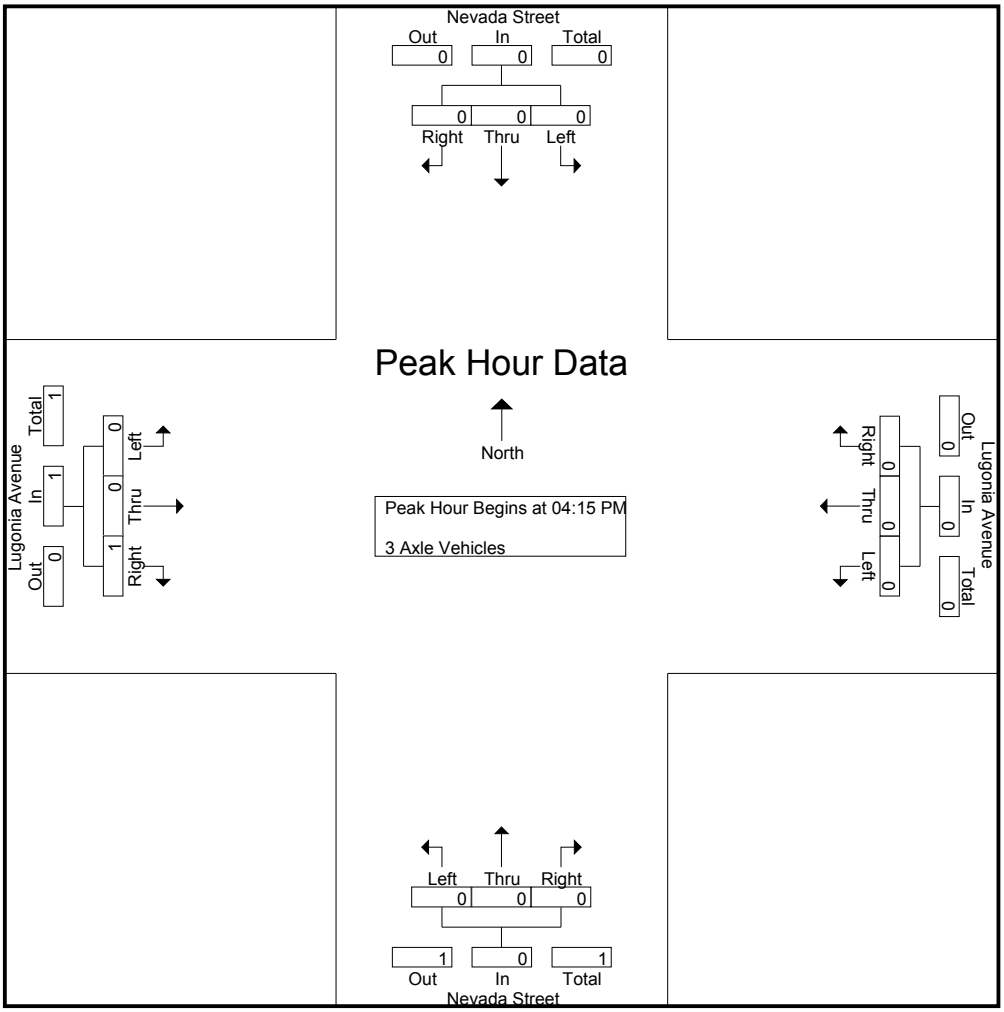

Peak Hour Analysis From 04:15 PM to 05:00 PM - Peak 1 of 1
Peak Hour for Each Approach Begins at:

	04:15 PM				04:15 PM				04:15 PM				04:15 PM			
+0 mins.	0	0	0	0	0	0	0	0	0	0	0	0	0	0	0	0
+15 mins.	0	0	0	0	0	0	0	0	0	0	0	0	0	0	0	0
+30 mins.	0	0	0	0	0	0	0	0	0	0	0	0	0	0	**1**	**1**
+45 mins.	0	0	0	0	0	0	0	0	0	0	0	0	0	0	0	0
Total Volume	0	0	0	0	0	0	0	0	0	0	0	0	0	0	1	1
% App. Total	0	0	0		0	0	0		0	0	0		0	0	100	
PHF	.000	.000	.000	.000	.000	.000	.000	.000	.000	.000	.000	.000	.000	.000	.250	.250

Counts Unlimited Inc.
PO Box 1178
Corona, CA 92878
(951) 268-6268

City of Redlands
N/S: Nevada Street
E/W: Lugonia Avenue
Weather: Sunny

File Name : REDNELUPM
Site Code : 00000125
Start Date : 2/9/2012
Page No : 1

Groups Printed- 4+ Axle Trucks

	Nevada Street Southbound				Lugonia Avenue Westbound				Nevada Street Northbound				Lugonia Avenue Eastbound				
Start Time	Left	Thru	Right	App. Total	Left	Thru	Right	App. Total	Left	Thru	Right	App. Total	Left	Thru	Right	App. Total	Int. Total
04:00 PM	0	0	0	0	0	0	0	0	0	0	0	0	0	0	0	0	0
04:15 PM	0	0	0	0	0	0	0	0	0	0	0	0	0	0	0	0	0
04:30 PM	0	0	0	0	0	0	0	0	0	0	0	0	0	0	0	0	0
04:45 PM	0	0	0	0	0	0	0	0	0	0	0	0	0	0	0	0	0
Total	0	0	0	0	0	0	0	0	0	0	0	0	0	0	0	0	0
05:00 PM	0	0	0	0	0	0	0	0	0	0	0	0	0	0	0	0	0
05:15 PM	0	0	0	0	0	0	0	0	0	0	0	0	0	0	0	0	0
05:30 PM	0	0	0	0	0	0	0	0	0	0	0	0	0	0	0	0	0
05:45 PM	0	0	0	0	0	0	0	0	0	0	0	0	0	1	0	1	1
Total	0	0	0	0	0	0	0	0	0	0	0	0	0	1	0	1	1
Grand Total	0	0	0	0	0	0	0	0	0	0	0	0	0	1	0	1	1
Apprch %	0	0	0		0	0	0		0	0	0		0	100	0		
Total %	0	0	0	0	0	0	0	0	0	0	0	0	0	100	0	100	

	Nevada Street Southbound				Lugonia Avenue Westbound				Nevada Street Northbound				Lugonia Avenue Eastbound				
Start Time	Left	Thru	Right	App. Total	Left	Thru	Right	App. Total	Left	Thru	Right	App. Total	Left	Thru	Right	App. Total	Int. Total
Peak Hour Analysis From 04:15 PM to 05:00 PM - Peak 1 of 1																	
Peak Hour for Entire Intersection Begins at 04:15 PM																	
04:15 PM	0	0	0	0	0	0	0	0	0	0	0	0	0	0	0	0	0
04:30 PM	0	0	0	0	0	0	0	0	0	0	0	0	0	0	0	0	0
04:45 PM	0	0	0	0	0	0	0	0	0	0	0	0	0	0	0	0	0
05:00 PM	0	0	0	0	0	0	0	0	0	0	0	0	0	0	0	0	0
Total Volume	0	0	0	0	0	0	0	0	0	0	0	0	0	0	0	0	0
% App. Total	0	0	0		0	0	0		0	0	0		0	0	0		
PHF	.000	.000	.000	.000	.000	.000	.000	.000	.000	.000	.000	.000	.000	.000	.000	.000	.000

Counts Unlimited Inc.
PO Box 1178
Corona, CA 92878
(951) 268-6268

City of Redlands
N/S: Nevada Street
E/W: Lugonia Avenue
Weather: Sunny

File Name : REDNELUPM
Site Code : 00000125
Start Date : 2/9/2012
Page No : 2

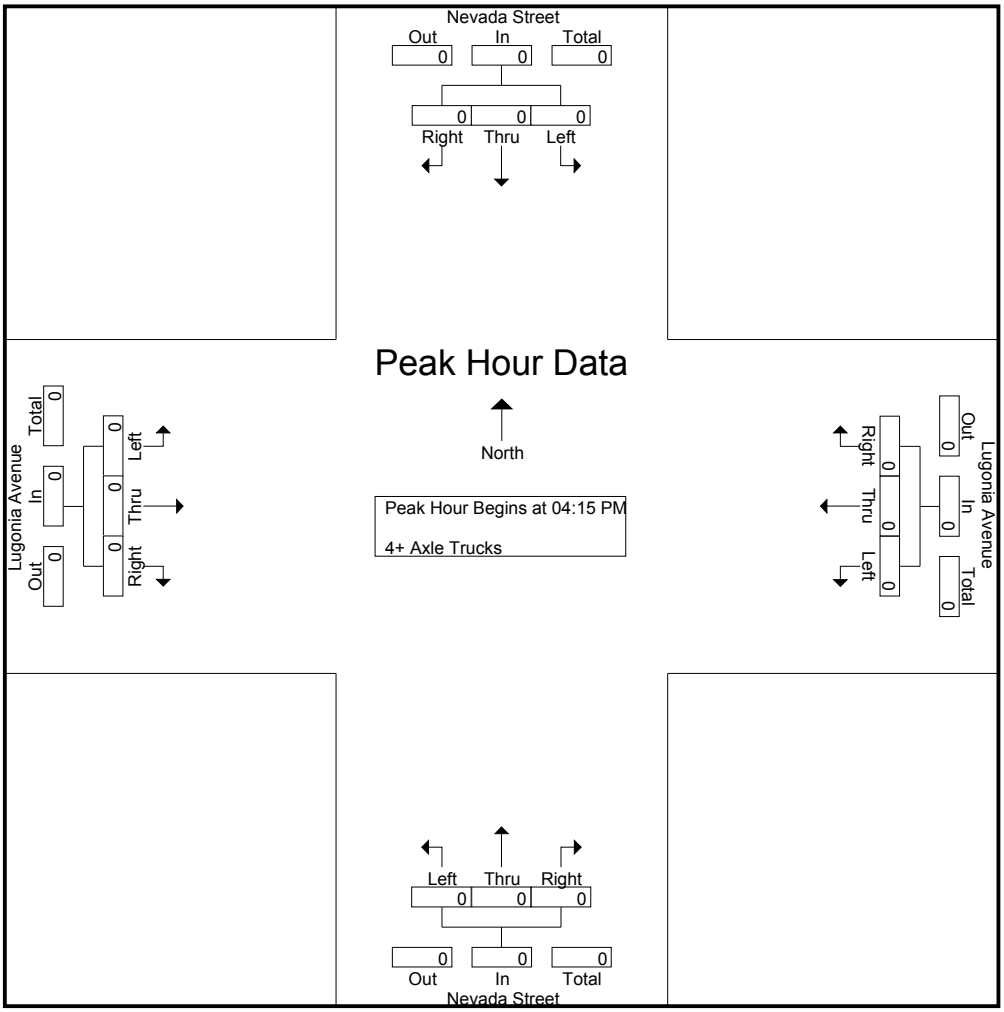

Peak Hour Analysis From 04:15 PM to 05:00 PM - Peak 1 of 1
Peak Hour for Each Approach Begins at:

	04:15 PM				04:15 PM				04:15 PM				04:15 PM			
+0 mins.	0	0	0	0	0	0	0	0	0	0	0	0	0	0	0	0
+15 mins.	0	0	0	0	0	0	0	0	0	0	0	0	0	0	0	0
+30 mins.	0	0	0	0	0	0	0	0	0	0	0	0	0	0	0	0
+45 mins.	0	0	0	0	0	0	0	0	0	0	0	0	0	0	0	0
Total Volume	0	0	0	0	0	0	0	0	0	0	0	0	0	0	0	0
% App. Total	0	0	0		0	0	0		0	0	0		0	0	0	
PHF	.000	.000	.000	.000	.000	.000	.000	.000	.000	.000	.000	.000	.000	.000	.000	.000

Counts Unlimited Inc.
PO Box 1178
Corona, CA 92878
(951) 268-6268

City of Redlands
N/S: Alabama Street
E/W: Lugonia Avenue
Weather: Sunny

File Name : REDALLUAM
Site Code : 00000047
Start Date : 2/9/2012
Page No : 1

Groups Printed- Passenger Vehicles - Large 2 Axle Vehicles - 3 Axle Vehicles - 4+ Axle Trucks

	Alabama Street Southbound				Lugonia Avenue Westbound				Alabama Street Northbound				Lugonia Avenue Eastbound				
Start Time	Left	Thru	Right	App. Total	Left	Thru	Right	App. Total	Left	Thru	Right	App. Total	Left	Thru	Right	App. Total	Int. Total
07:00 AM	0	59	10	69	21	41	10	72	10	43	1	54	8	9	5	22	217
07:15 AM	10	67	12	89	26	43	3	72	7	52	14	73	2	12	6	20	254
07:30 AM	4	85	15	104	45	38	7	90	19	57	23	99	4	16	2	22	315
07:45 AM	8	92	16	116	44	71	11	126	26	70	26	122	8	13	6	27	391
Total	22	303	53	378	136	193	31	360	62	222	64	348	22	50	19	91	1177
08:00 AM	9	74	15	98	37	42	5	84	28	62	33	123	12	26	9	47	352
08:15 AM	8	68	13	89	35	55	4	94	17	69	39	125	9	16	11	36	344
08:30 AM	10	76	12	98	41	31	8	80	15	43	35	93	13	24	8	45	316
08:45 AM	7	68	22	97	41	50	3	94	21	60	35	116	18	23	12	53	360
Total	34	286	62	382	154	178	20	352	81	234	142	457	52	89	40	181	1372
Grand Total	56	589	115	760	290	371	51	712	143	456	206	805	74	139	59	272	2549
Apprch %	7.4	77.5	15.1		40.7	52.1	7.2		17.8	56.6	25.6		27.2	51.1	21.7		
Total %	2.2	23.1	4.5	29.8	11.4	14.6	2	27.9	5.6	17.9	8.1	31.6	2.9	5.5	2.3	10.7	
Passenger Vehicles	46	558	114	718	284	366	42	692	142	406	193	741	73	137	57	267	2418
% Passenger Vehicles	82.1	94.7	99.1	94.5	97.9	98.7	82.4	97.2	99.3	89	93.7	92	98.6	98.6	96.6	98.2	94.9
Large 2 Axle Vehicles	5	3	1	9	3	2	7	12	1	10	7	18	1	1	1	3	42
% Large 2 Axle Vehicles	8.9	0.5	0.9	1.2	1	0.5	13.7	1.7	0.7	2.2	3.4	2.2	1.4	0.7	1.7	1.1	1.6
3 Axle Vehicles	1	2	0	3	2	2	0	4	0	8	3	11	0	0	1	1	19
% 3 Axle Vehicles	1.8	0.3	0	0.4	0.7	0.5	0	0.6	0	1.8	1.5	1.4	0	0	1.7	0.4	0.7
4+ Axle Trucks	4	26	0	30	1	1	2	4	0	32	3	35	0	1	0	1	70
% 4+ Axle Trucks	7.1	4.4	0	3.9	0.3	0.3	3.9	0.6	0	7	1.5	4.3	0	0.7	0	0.4	2.7

	Alabama Street Southbound				Lugonia Avenue Westbound				Alabama Street Northbound				Lugonia Avenue Eastbound				
Start Time	Left	Thru	Right	App. Total	Left	Thru	Right	App. Total	Left	Thru	Right	App. Total	Left	Thru	Right	App. Total	Int. Total
Peak Hour Analysis From 07:00 AM to 08:45 AM - Peak 1 of 1																	
Peak Hour for Entire Intersection Begins at 07:45 AM																	
07:45 AM	8	**92**	**16**	**116**	**44**	**71**	**11**	**126**	26	**70**	26	122	8	13	6	27	**391**
08:00 AM	9	74	15	98	37	42	5	84	**28**	62	33	123	12	**26**	9	**47**	352
08:15 AM	8	68	13	89	35	55	4	94	17	69	**39**	**125**	9	16	**11**	36	344
08:30 AM	**10**	76	12	98	41	31	8	80	15	43	35	93	**13**	24	8	45	316
Total Volume	35	310	56	401	157	199	28	384	86	244	133	463	42	79	34	155	1403
% App. Total	8.7	77.3	14		40.9	51.8	7.3		18.6	52.7	28.7		27.1	51	21.9		
PHF	.875	.842	.875	.864	.892	.701	.636	.762	.768	.871	.853	.926	.808	.760	.773	.824	.897

Counts Unlimited Inc.
PO Box 1178
Corona, CA 92878
(951) 268-6268

City of Redlands
N/S: Alabama Street
E/W: Lugonia Avenue
Weather: Sunny

File Name : REDALLUAM
Site Code : 00000047
Start Date : 2/9/2012
Page No : 2

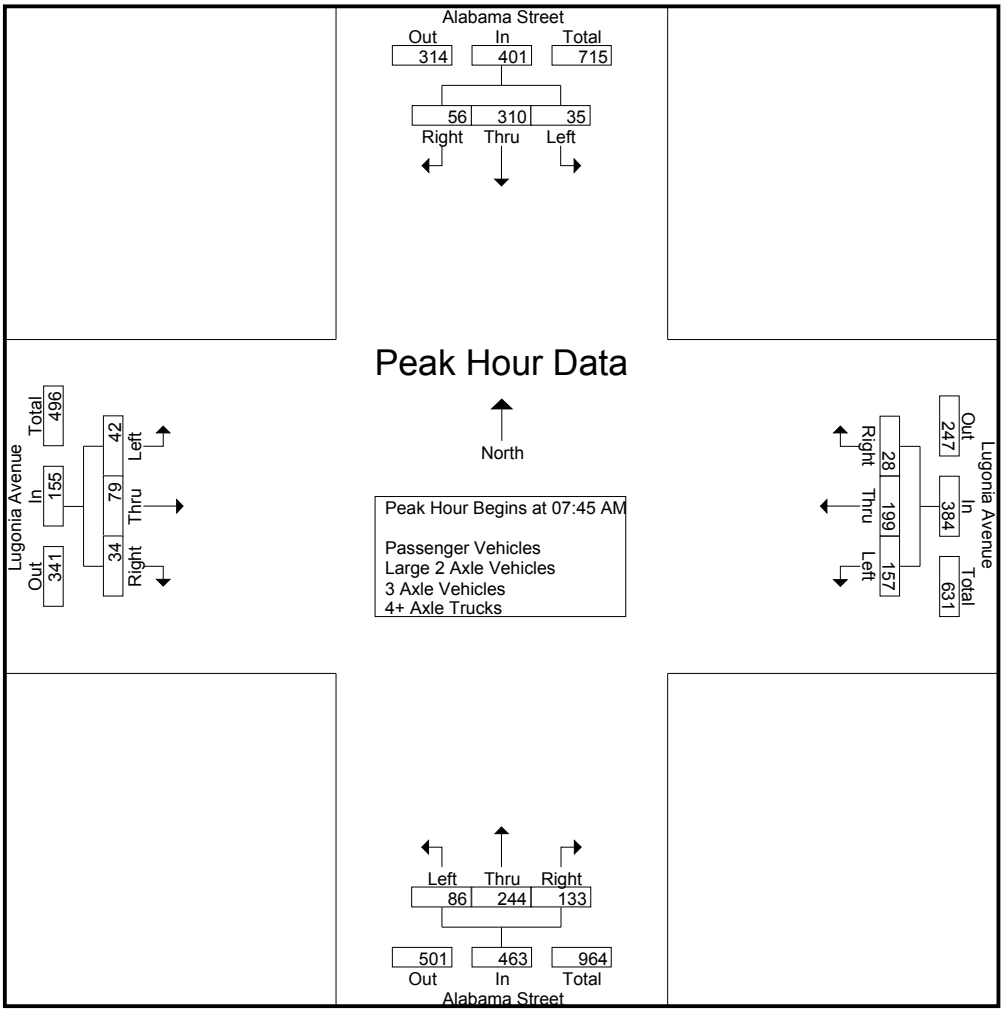

Peak Hour Analysis From 07:00 AM to 08:45 AM - Peak 1 of 1
Peak Hour for Each Approach Begins at:

	07:15 AM				07:30 AM				07:30 AM				08:00 AM			
+0 mins.	**10**	67	12	89	**45**	38	7	90	19	57	23	99	12	**26**	9	47
+15 mins.	4	85	15	104	44	**71**	**11**	**126**	26	**70**	26	122	9	16	11	36
+30 mins.	8	**92**	**16**	**116**	37	42	5	84	**28**	62	33	123	13	24	8	45
+45 mins.	9	74	15	98	35	55	4	94	17	69	**39**	**125**	**18**	23	**12**	**53**
Total Volume	31	318	58	407	161	206	27	394	90	258	121	469	52	89	40	181
% App. Total	7.6	78.1	14.3		40.9	52.3	6.9		19.2	55	25.8		28.7	49.2	22.1	
PHF	.775	.864	.906	.877	.894	.725	.614	.782	.804	.921	.776	.938	.722	.856	.833	.854

Counts Unlimited Inc.
PO Box 1178
Corona, CA 92878
(951) 268-6268

City of Redlands
N/S: Alabama Street
E/W: Lugonia Avenue
Weather: Sunny

File Name : REDALLUAM
Site Code : 00000047
Start Date : 2/9/2012
Page No : 1

Groups Printed- Passenger Vehicles

	Alabama Street Southbound				Lugonia Avenue Westbound				Alabama Street Northbound				Lugonia Avenue Eastbound				
Start Time	Left	Thru	Right	App. Total	Left	Thru	Right	App. Total	Left	Thru	Right	App. Total	Left	Thru	Right	App. Total	Int. Total
07:00 AM	0	56	10	66	21	39	7	67	10	38	1	49	7	9	4	20	202
07:15 AM	9	61	12	82	25	43	3	71	7	46	12	65	2	11	6	19	237
07:30 AM	3	81	15	99	44	38	7	89	19	52	22	93	4	16	2	22	303
07:45 AM	7	90	16	113	43	70	10	123	25	61	24	110	8	13	6	27	373
Total	19	288	53	360	133	190	27	350	61	197	59	317	21	49	18	88	1115
08:00 AM	8	71	14	93	36	42	4	82	28	56	33	117	12	26	9	47	339
08:15 AM	6	63	13	82	35	53	4	92	17	62	35	114	9	16	10	35	323
08:30 AM	7	73	12	92	41	31	6	78	15	40	33	88	13	23	8	44	302
08:45 AM	6	63	22	91	39	50	1	90	21	51	33	105	18	23	12	53	339
Total	27	270	61	358	151	176	15	342	81	209	134	424	52	88	39	179	1303
Grand Total	46	558	114	718	284	366	42	692	142	406	193	741	73	137	57	267	2418
Apprch %	6.4	77.7	15.9		41	52.9	6.1		19.2	54.8	26		27.3	51.3	21.3		
Total %	1.9	23.1	4.7	29.7	11.7	15.1	1.7	28.6	5.9	16.8	8	30.6	3	5.7	2.4	11	

	Alabama Street Southbound				Lugonia Avenue Westbound				Alabama Street Northbound				Lugonia Avenue Eastbound				
Start Time	Left	Thru	Right	App. Total	Left	Thru	Right	App. Total	Left	Thru	Right	App. Total	Left	Thru	Right	App. Total	Int. Total
Peak Hour Analysis From 07:45 AM to 08:30 AM - Peak 1 of 1																	
Peak Hour for Entire Intersection Begins at 07:45 AM																	
07:45 AM	7	**90**	**16**	**113**	**43**	**70**	**10**	**123**	25	61	24	110	8	13	6	27	**373**
08:00 AM	**8**	71	14	93	36	42	4	82	**28**	56	33	**117**	12	**26**	9	**47**	339
08:15 AM	6	63	13	82	35	53	4	92	17	**62**	**35**	114	9	16	**10**	35	323
08:30 AM	7	73	12	92	41	31	6	78	15	40	33	88	**13**	23	8	44	302
Total Volume	28	297	55	380	155	196	24	375	85	219	125	429	42	78	33	153	1337
% App. Total	7.4	78.2	14.5		41.3	52.3	6.4		19.8	51	29.1		27.5	51	21.6		
PHF	.875	.825	.859	.841	.901	.700	.600	.762	.759	.883	.893	.917	.808	.750	.825	.814	.896

Counts Unlimited Inc.
PO Box 1178
Corona, CA 92878
(951) 268-6268

City of Redlands
N/S: Alabama Street
E/W: Lugonia Avenue
Weather: Sunny

File Name : REDALLUAM
Site Code : 00000047
Start Date : 2/9/2012
Page No : 2

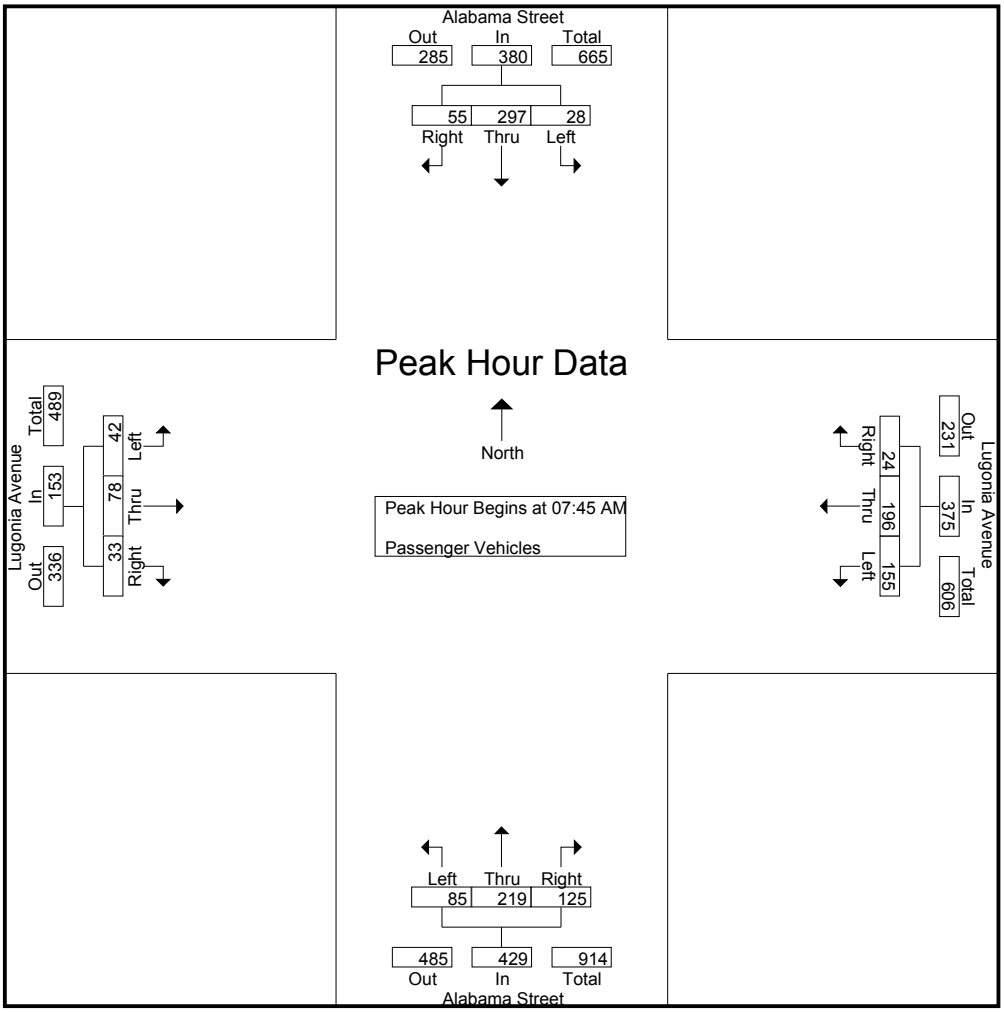

Peak Hour Analysis From 07:45 AM to 08:30 AM - Peak 1 of 1
Peak Hour for Each Approach Begins at:

	07:45 AM				07:45 AM				07:45 AM				07:45 AM			
+0 mins.	7	**90**	**16**	**113**	**43**	**70**	**10**	**123**	25	61	24	110	8	13	6	27
+15 mins.	**8**	71	14	93	36	42	4	82	**28**	56	33	**117**	12	**26**	9	**47**
+30 mins.	6	63	13	82	35	53	4	92	17	**62**	**35**	114	9	16	**10**	35
+45 mins.	7	73	12	92	41	31	6	78	15	40	33	88	**13**	23	8	44
Total Volume	28	297	55	380	155	196	24	375	85	219	125	429	42	78	33	153
% App. Total	7.4	78.2	14.5		41.3	52.3	6.4		19.8	51	29.1		27.5	51	21.6	
PHF	.875	.825	.859	.841	.901	.700	.600	.762	.759	.883	.893	.917	.808	.750	.825	.814

Counts Unlimited Inc.
PO Box 1178
Corona, CA 92878
(951) 268-6268

City of Redlands
N/S: Alabama Street
E/W: Lugonia Avenue
Weather: Sunny

File Name : REDALLUAM
Site Code : 00000047
Start Date : 2/9/2012
Page No : 1

Groups Printed- Large 2 Axle Vehicles

	Alabama Street Southbound				Lugonia Avenue Westbound				Alabama Street Northbound				Lugonia Avenue Eastbound				
Start Time	Left	Thru	Right	App. Total	Left	Thru	Right	App. Total	Left	Thru	Right	App. Total	Left	Thru	Right	App. Total	Int. Total
07:00 AM	0	1	0	1	0	1	3	4	0	1	0	1	1	0	1	2	8
07:15 AM	1	1	0	2	0	0	0	0	0	2	1	3	0	0	0	0	5
07:30 AM	0	0	0	0	0	0	0	0	0	0	1	1	0	0	0	0	1
07:45 AM	1	0	0	1	0	1	1	2	1	2	1	4	0	0	0	0	7
Total	2	2	0	4	0	2	4	6	1	5	3	9	1	0	1	2	21
08:00 AM	1	0	1	2	1	0	1	2	0	0	0	0	0	0	0	0	4
08:15 AM	1	0	0	1	0	0	0	0	0	2	3	5	0	0	0	0	6
08:30 AM	1	0	0	1	0	0	2	2	0	0	0	0	0	1	0	1	4
08:45 AM	0	1	0	1	2	0	0	2	0	3	1	4	0	0	0	0	7
Total	3	1	1	5	3	0	3	6	0	5	4	9	0	1	0	1	21
Grand Total	5	3	1	9	3	2	7	12	1	10	7	18	1	1	1	3	42
Apprch %	55.6	33.3	11.1		25	16.7	58.3		5.6	55.6	38.9		33.3	33.3	33.3		
Total %	11.9	7.1	2.4	21.4	7.1	4.8	16.7	28.6	2.4	23.8	16.7	42.9	2.4	2.4	2.4	7.1	

	Alabama Street Southbound				Lugonia Avenue Westbound				Alabama Street Northbound				Lugonia Avenue Eastbound				
Start Time	Left	Thru	Right	App. Total	Left	Thru	Right	App. Total	Left	Thru	Right	App. Total	Left	Thru	Right	App. Total	Int. Total
Peak Hour Analysis From 07:45 AM to 08:30 AM - Peak 1 of 1																	
Peak Hour for Entire Intersection Begins at 07:45 AM																	
07:45 AM	**1**	0	0	1	0	**1**	1	**2**	**1**	**2**	1	4	0	0	0	0	**7**
08:00 AM	1	0	**1**	**2**	**1**	0	1	2	0	0	0	0	0	0	0	0	4
08:15 AM	1	0	0	1	0	0	0	0	0	2	**3**	**5**	0	0	0	0	6
08:30 AM	1	0	0	1	0	0	**2**	2	0	0	0	0	0	**1**	0	**1**	4
Total Volume	4	0	1	5	1	1	4	6	1	4	4	9	0	1	0	1	21
% App. Total	80	0	20		16.7	16.7	66.7		11.1	44.4	44.4		0	100	0		
PHF	1.00	.000	.250	.625	.250	.250	.500	.750	.250	.500	.333	.450	.000	.250	.000	.250	.750

Counts Unlimited Inc.
PO Box 1178
Corona, CA 92878
(951) 268-6268

City of Redlands
N/S: Alabama Street
E/W: Lugonia Avenue
Weather: Sunny

File Name : REDALLUAM
Site Code : 00000047
Start Date : 2/9/2012
Page No : 2

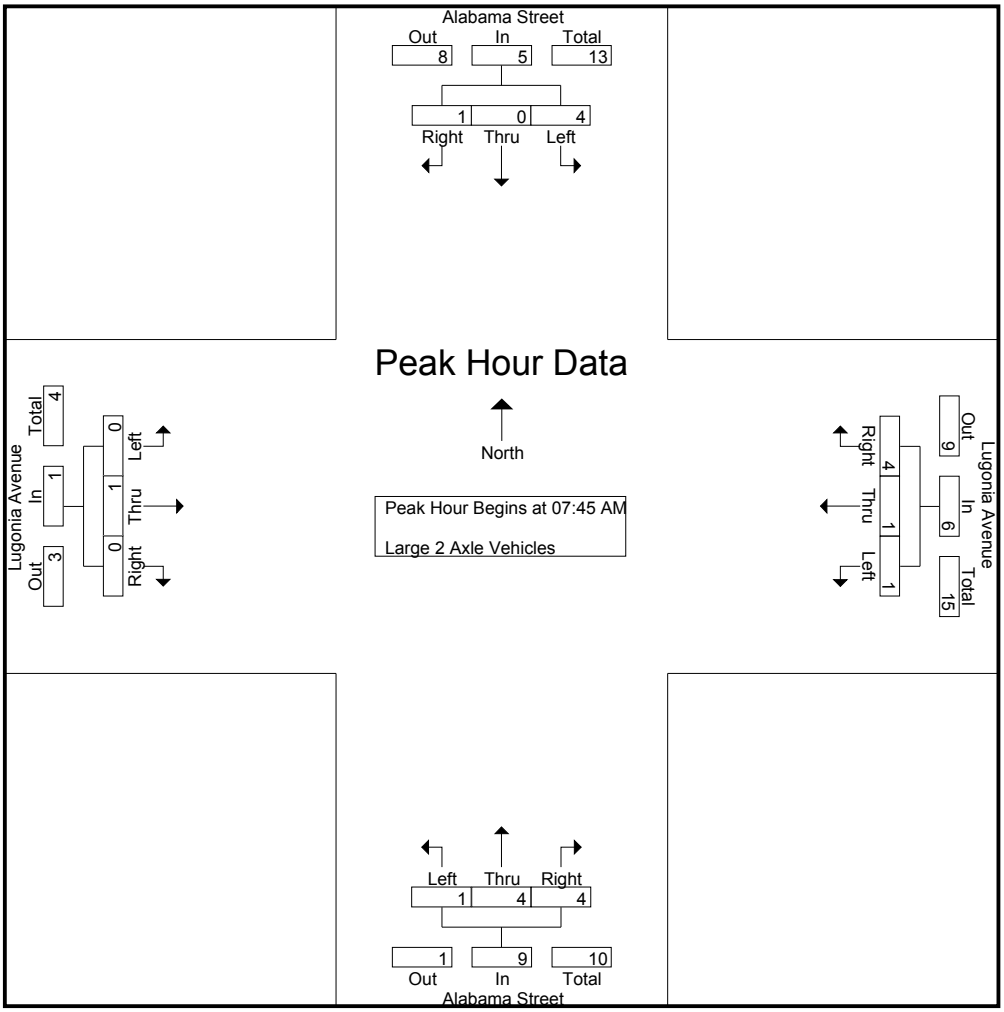

Peak Hour Analysis From 07:45 AM to 08:30 AM - Peak 1 of 1
Peak Hour for Each Approach Begins at:

	07:45 AM				07:45 AM				07:45 AM				07:45 AM			
+0 mins.	**1**	0	0	1	0	**1**	1	**2**	**1**	**2**	1	4	0	0	0	0
+15 mins.	1	0	**1**	**2**	**1**	0	1	2	0	0	0	0	0	0	0	0
+30 mins.	1	0	0	1	0	0	0	0	0	2	**3**	**5**	0	0	0	0
+45 mins.	1	0	0	1	0	0	**2**	2	0	0	0	0	0	**1**	0	**1**
Total Volume	4	0	1	5	1	1	4	6	1	4	4	9	0	1	0	1
% App. Total	80	0	20		16.7	16.7	66.7		11.1	44.4	44.4		0	100	0	
PHF	1.000	.000	.250	.625	.250	.250	.500	.750	.250	.500	.333	.450	.000	.250	.000	.250

Counts Unlimited Inc.
PO Box 1178
Corona, CA 92878
(951) 268-6268

City of Redlands
N/S: Alabama Street
E/W: Lugonia Avenue
Weather: Sunny

File Name : REDALLUAM
Site Code : 00000047
Start Date : 2/9/2012
Page No : 1

Groups Printed- 3 Axle Vehicles

	Alabama Street Southbound				Lugonia Avenue Westbound				Alabama Street Northbound				Lugonia Avenue Eastbound				
Start Time	Left	Thru	Right	App. Total	Left	Thru	Right	App. Total	Left	Thru	Right	App. Total	Left	Thru	Right	App. Total	Int. Total
07:00 AM	0	0	0	0	0	1	0	1	0	0	0	0	0	0	0	0	1
07:15 AM	0	0	0	0	1	0	0	1	0	1	0	1	0	0	0	0	2
07:30 AM	0	1	0	1	0	0	0	0	0	2	0	2	0	0	0	0	3
07:45 AM	0	1	0	1	1	0	0	1	0	2	0	2	0	0	0	0	4
Total	0	2	0	2	2	1	0	3	0	5	0	5	0	0	0	0	10
08:00 AM	0	0	0	0	0	0	0	0	0	1	0	1	0	0	0	0	1
08:15 AM	0	0	0	0	0	1	0	1	0	1	0	1	0	0	1	1	3
08:30 AM	0	0	0	0	0	0	0	0	0	0	2	2	0	0	0	0	2
08:45 AM	1	0	0	1	0	0	0	0	0	1	1	2	0	0	0	0	3
Total	1	0	0	1	0	1	0	1	0	3	3	6	0	0	1	1	9
Grand Total	1	2	0	3	2	2	0	4	0	8	3	11	0	0	1	1	19
Apprch %	33.3	66.7	0		50	50	0		0	72.7	27.3		0	0	100		
Total %	5.3	10.5	0	15.8	10.5	10.5	0	21.1	0	42.1	15.8	57.9	0	0	5.3	5.3	

	Alabama Street Southbound				Lugonia Avenue Westbound				Alabama Street Northbound				Lugonia Avenue Eastbound				
Start Time	Left	Thru	Right	App. Total	Left	Thru	Right	App. Total	Left	Thru	Right	App. Total	Left	Thru	Right	App. Total	Int. Total
Peak Hour Analysis From 07:45 AM to 08:30 AM - Peak 1 of 1																	
Peak Hour for Entire Intersection Begins at 07:45 AM																	
07:45 AM	0	**1**	0	**1**	**1**	0	0	**1**	0	**2**	0	**2**	0	0	0	0	**4**
08:00 AM	0	0	0	0	0	0	0	0	0	1	0	1	0	0	0	0	1
08:15 AM	0	0	0	0	0	**1**	0	1	0	1	0	1	0	0	**1**	**1**	3
08:30 AM	0	0	0	0	0	0	0	0	0	0	**2**	2	0	0	0	0	2
Total Volume	0	1	0	1	1	1	0	2	0	4	2	6	0	0	1	1	10
% App. Total	0	100	0		50	50	0		0	66.7	33.3		0	0	100		
PHF	.000	.250	.000	.250	.250	.250	.000	.500	.000	.500	.250	.750	.000	.000	.250	.250	.625

Counts Unlimited Inc.
PO Box 1178
Corona, CA 92878
(951) 268-6268

City of Redlands
N/S: Alabama Street
E/W: Lugonia Avenue
Weather: Sunny

File Name : REDALLUAM
Site Code : 00000047
Start Date : 2/9/2012
Page No : 2

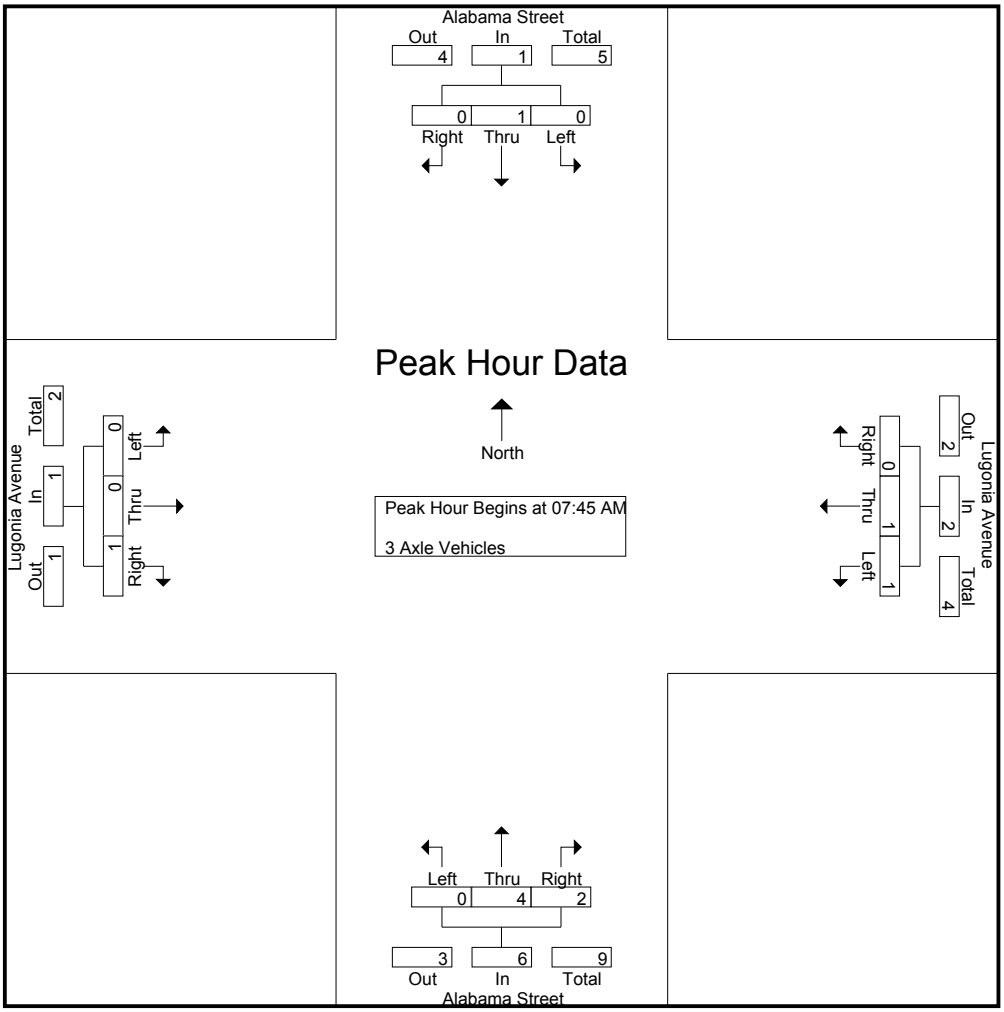

Peak Hour Analysis From 07:45 AM to 08:30 AM - Peak 1 of 1
Peak Hour for Each Approach Begins at:

	07:45 AM				07:45 AM				07:45 AM				07:45 AM			
+0 mins.	0	**1**	0	**1**	**1**	0	0	**1**	0	**2**	0	**2**	0	0	0	0
+15 mins.	0	0	0	0	0	0	0	0	0	1	0	1	0	0	0	0
+30 mins.	0	0	0	0	0	**1**	0	1	0	1	0	1	0	0	**1**	**1**
+45 mins.	0	0	0	0	0	0	0	0	0	0	**2**	2	0	0	0	0
Total Volume	0	1	0	1	1	1	0	2	0	4	2	6	0	0	1	1
% App. Total	0	100	0		50	50	0		0	66.7	33.3		0	0	100	
PHF	.000	.250	.000	.250	.250	.250	.000	.500	.000	.500	.250	.750	.000	.000	.250	.250

Counts Unlimited Inc.
PO Box 1178
Corona, CA 92878
(951) 268-6268

City of Redlands
N/S: Alabama Street
E/W: Lugonia Avenue
Weather: Sunny

File Name : REDALLUAM
Site Code : 00000047
Start Date : 2/9/2012
Page No : 1

Groups Printed- 4+ Axle Trucks

	Alabama Street Southbound				Lugonia Avenue Westbound				Alabama Street Northbound				Lugonia Avenue Eastbound				
Start Time	Left	Thru	Right	App. Total	Left	Thru	Right	App. Total	Left	Thru	Right	App. Total	Left	Thru	Right	App. Total	Int. Total
07:00 AM	0	2	0	2	0	0	0	0	0	4	0	4	0	0	0	0	6
07:15 AM	0	5	0	5	0	0	0	0	0	3	1	4	0	1	0	1	10
07:30 AM	1	3	0	4	1	0	0	1	0	3	0	3	0	0	0	0	8
07:45 AM	0	1	0	1	0	0	0	0	0	5	1	6	0	0	0	0	7
Total	1	11	0	12	1	0	0	1	0	15	2	17	0	1	0	1	31
08:00 AM	0	3	0	3	0	0	0	0	0	5	0	5	0	0	0	0	8
08:15 AM	1	5	0	6	0	1	0	1	0	4	1	5	0	0	0	0	12
08:30 AM	2	3	0	5	0	0	0	0	0	3	0	3	0	0	0	0	8
08:45 AM	0	4	0	4	0	0	2	2	0	5	0	5	0	0	0	0	11
Total	3	15	0	18	0	1	2	3	0	17	1	18	0	0	0	0	39
Grand Total	4	26	0	30	1	1	2	4	0	32	3	35	0	1	0	1	70
Apprch %	13.3	86.7	0		25	25	50		0	91.4	8.6		0	100	0		
Total %	5.7	37.1	0	42.9	1.4	1.4	2.9	5.7	0	45.7	4.3	50	0	1.4	0	1.4	

	Alabama Street Southbound				Lugonia Avenue Westbound				Alabama Street Northbound				Lugonia Avenue Eastbound				
Start Time	Left	Thru	Right	App. Total	Left	Thru	Right	App. Total	Left	Thru	Right	App. Total	Left	Thru	Right	App. Total	Int. Total
Peak Hour Analysis From 07:45 AM to 08:30 AM - Peak 1 of 1																	
Peak Hour for Entire Intersection Begins at 07:45 AM																	
07:45 AM	0	1	0	1	0	0	0	0	0	**5**	**1**	**6**	0	0	0	0	7
08:00 AM	0	3	0	3	0	0	0	0	0	5	0	5	0	0	0	0	8
08:15 AM	1	**5**	0	**6**	0	**1**	0	**1**	0	4	1	5	0	0	0	0	**12**
08:30 AM	**2**	3	0	5	0	0	0	0	0	3	0	3	0	0	0	0	8
Total Volume	3	12	0	15	0	1	0	1	0	17	2	19	0	0	0	0	35
% App. Total	20	80	0		0	100	0		0	89.5	10.5		0	0	0		
PHF	.375	.600	.000	.625	.000	.250	.000	.250	.000	.850	.500	.792	.000	.000	.000	.000	.729

Counts Unlimited Inc.
PO Box 1178
Corona, CA 92878
(951) 268-6268

City of Redlands
N/S: Alabama Street
E/W: Lugonia Avenue
Weather: Sunny

File Name : REDALLUAM
Site Code : 00000047
Start Date : 2/9/2012
Page No : 2

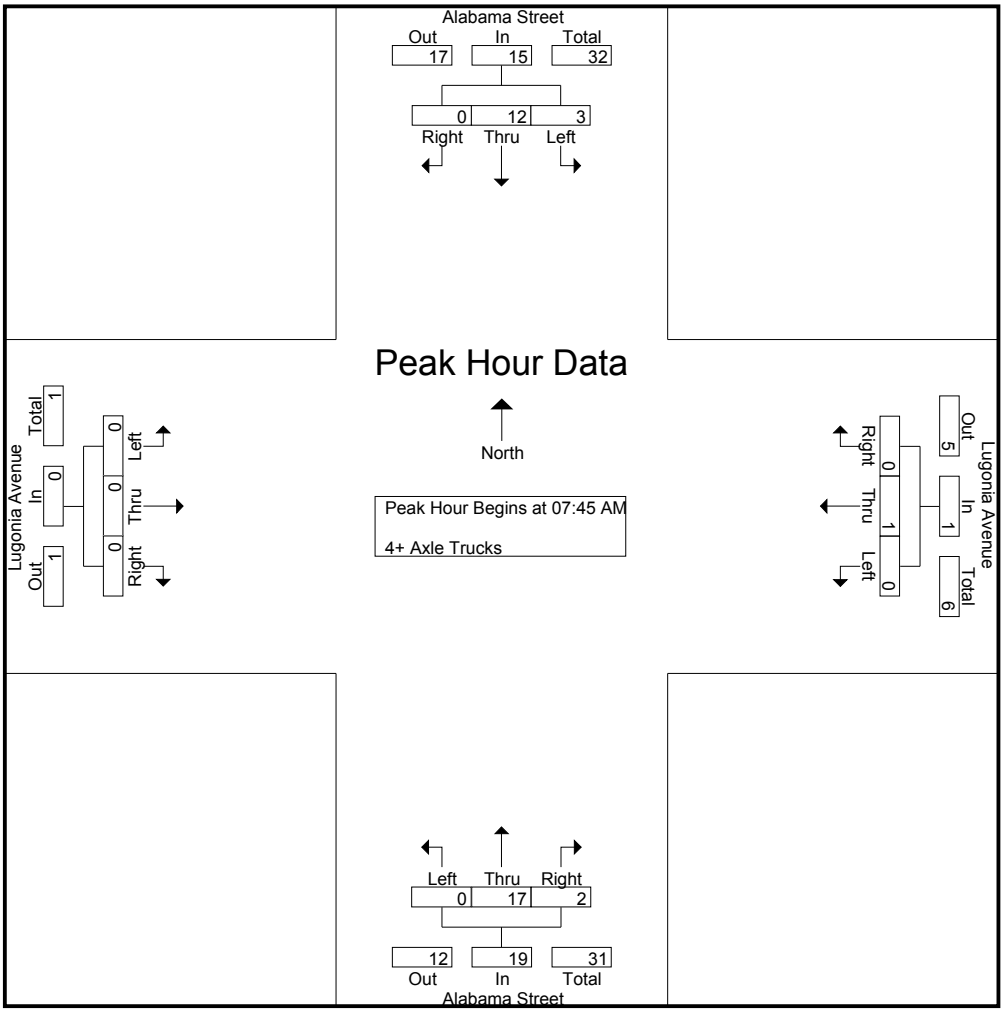

Peak Hour Analysis From 07:45 AM to 08:30 AM - Peak 1 of 1

Peak Hour for Each Approach Begins at:

	07:45 AM				07:45 AM				07:45 AM				07:45 AM			
+0 mins.	0	1	0	1	0	0	0	0	0	**5**	**1**	**6**	0	0	0	0
+15 mins.	0	3	0	3	0	0	0	0	0	5	0	5	0	0	0	0
+30 mins.	1	**5**	0	**6**	0	**1**	0	**1**	0	4	1	5	0	0	0	0
+45 mins.	**2**	3	0	5	0	0	0	0	0	3	0	3	0	0	0	0
Total Volume	3	12	0	15	0	1	0	1	0	17	2	19	0	0	0	0
% App. Total	20	80	0		0	100	0		0	89.5	10.5		0	0	0	
PHF	.375	.600	.000	.625	.000	.250	.000	.250	.000	.850	.500	.792	.000	.000	.000	.000

Counts Unlimited Inc.
PO Box 1178
Corona, CA 92878
(951) 268-6268

City of Redlands
N/S: Alabama Street
E/W: Lugonia Avenue
Weather: Sunny

File Name : REDALLUPM
Site Code : 00000037
Start Date : 2/9/2012
Page No : 1

Groups Printed- Passenger Vehicles - Large 2 Axle Vehicles - 3 Axle Vehicles - 4+ Axle Trucks

	Alabama Street Southbound				Lugonia Avenue Westbound				Alabama Street Northbound				Lugonia Avenue Eastbound				
Start Time	Left	Thru	Right	App. Total	Left	Thru	Right	App. Total	Left	Thru	Right	App. Total	Left	Thru	Right	App. Total	Int. Total
04:00 PM	11	85	13	109	96	63	3	162	36	105	91	232	29	62	21	112	615
04:15 PM	30	97	12	139	80	64	12	156	34	132	54	220	27	58	14	99	614
04:30 PM	29	102	8	139	73	58	7	138	30	153	79	262	30	76	18	124	663
04:45 PM	31	116	7	154	89	67	8	164	18	151	76	245	34	74	12	120	683
Total	101	400	40	541	338	252	30	620	118	541	300	959	120	270	65	455	2575
05:00 PM	29	93	3	125	82	78	12	172	16	162	91	269	32	101	12	145	711
05:15 PM	35	114	7	156	80	61	10	151	35	141	114	290	36	68	23	127	724
05:30 PM	38	124	4	166	87	56	11	154	47	129	88	264	27	65	23	115	699
05:45 PM	30	130	3	163	88	69	2	159	18	141	68	227	28	57	28	113	662
Total	132	461	17	610	337	264	35	636	116	573	361	1050	123	291	86	500	2796
Grand Total	233	861	57	1151	675	516	65	1256	234	1114	661	2009	243	561	151	955	5371
Apprch %	20.2	74.8	5		53.7	41.1	5.2		11.6	55.5	32.9		25.4	58.7	15.8		
Total %	4.3	16	1.1	21.4	12.6	9.6	1.2	23.4	4.4	20.7	12.3	37.4	4.5	10.4	2.8	17.8	
Passenger Vehicles	228	834	57	1119	669	513	59	1241	233	1098	659	1990	241	559	150	950	5300
% Passenger Vehicles	97.9	96.9	100	97.2	99.1	99.4	90.8	98.8	99.6	98.6	99.7	99.1	99.2	99.6	99.3	99.5	98.7
Large 2 Axle Vehicles	4	1	0	5	2	2	4	8	1	1	2	4	2	1	0	3	20
% Large 2 Axle Vehicles	1.7	0.1	0	0.4	0.3	0.4	6.2	0.6	0.4	0.1	0.3	0.2	0.8	0.2	0	0.3	0.4
3 Axle Vehicles	0	2	0	2	1	0	1	2	0	2	0	2	0	0	1	1	7
% 3 Axle Vehicles	0	0.2	0	0.2	0.1	0	1.5	0.2	0	0.2	0	0.1	0	0	0.7	0.1	0.1
4+ Axle Trucks	1	24	0	25	3	1	1	5	0	13	0	13	0	1	0	1	44
% 4+ Axle Trucks	0.4	2.8	0	2.2	0.4	0.2	1.5	0.4	0	1.2	0	0.6	0	0.2	0	0.1	0.8

	Alabama Street Southbound				Lugonia Avenue Westbound				Alabama Street Northbound				Lugonia Avenue Eastbound				
Start Time	Left	Thru	Right	App. Total	Left	Thru	Right	App. Total	Left	Thru	Right	App. Total	Left	Thru	Right	App. Total	Int. Total
Peak Hour Analysis From 04:00 PM to 05:45 PM - Peak 1 of 1																	
Peak Hour for Entire Intersection Begins at 04:45 PM																	
04:45 PM	31	116	**7**	154	**89**	67	8	164	18	151	76	245	34	74	12	120	683
05:00 PM	29	93	3	125	82	**78**	**12**	**172**	16	**162**	91	269	32	**101**	12	**145**	711
05:15 PM	35	114	7	156	80	61	10	151	35	141	**114**	**290**	**36**	68	**23**	127	**724**
05:30 PM	**38**	**124**	4	**166**	87	56	11	154	**47**	129	88	264	27	65	23	115	699
Total Volume	133	447	21	601	338	262	41	641	116	583	369	1068	129	308	70	507	2817
% App. Total	22.1	74.4	3.5		52.7	40.9	6.4		10.9	54.6	34.6		25.4	60.7	13.8		
PHF	.875	.901	.750	.905	.949	.840	.854	.932	.617	.900	.809	.921	.896	.762	.761	.874	.973

Counts Unlimited Inc.
PO Box 1178
Corona, CA 92878
(951) 268-6268

City of Redlands
N/S: Alabama Street
E/W: Lugonia Avenue
Weather: Sunny

File Name : REDALLUPM
Site Code : 00000037
Start Date : 2/9/2012
Page No : 2

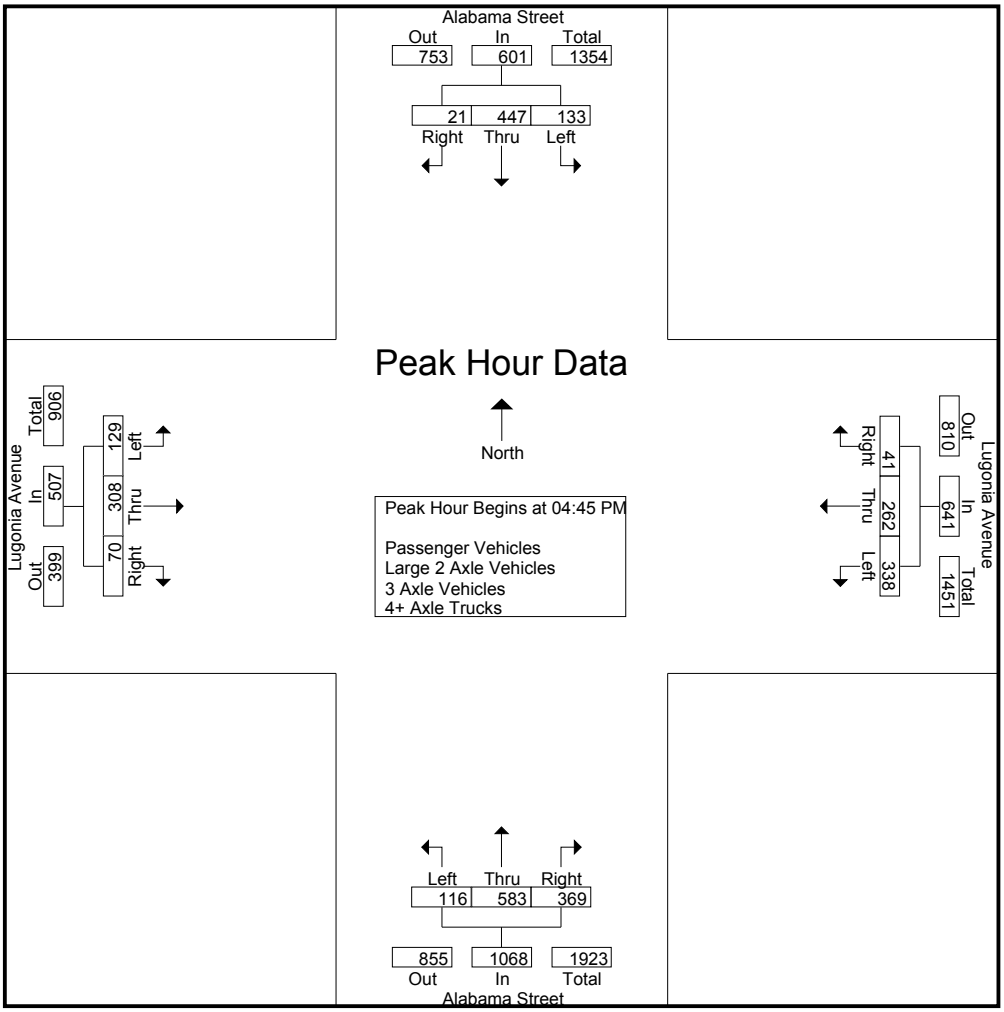

Peak Hour Analysis From 04:00 PM to 05:45 PM - Peak 1 of 1
Peak Hour for Each Approach Begins at:

	05:00 PM				04:45 PM				04:45 PM				04:30 PM			
+0 mins.	29	93	3	125	**89**	67	8	164	18	151	76	245	30	76	18	124
+15 mins.	35	114	**7**	156	82	**78**	**12**	**172**	16	**162**	91	269	34	74	12	120
+30 mins.	**38**	124	4	**166**	80	61	10	151	35	141	**114**	**290**	32	**101**	12	**145**
+45 mins.	30	**130**	3	163	87	56	11	154	**47**	129	88	264	**36**	68	**23**	127
Total Volume	132	461	17	610	338	262	41	641	116	583	369	1068	132	319	65	516
% App. Total	21.6	75.6	2.8		52.7	40.9	6.4		10.9	54.6	34.6		25.6	61.8	12.6	
PHF	.868	.887	.607	.919	.949	.840	.854	.932	.617	.900	.809	.921	.917	.790	.707	.890

Counts Unlimited Inc.
PO Box 1178
Corona, CA 92878
(951) 268-6268

City of Redlands
N/S: Alabama Street
E/W: Lugonia Avenue
Weather: Sunny

File Name : REDALLUPM
Site Code : 00000037
Start Date : 2/9/2012
Page No : 1

Groups Printed- Passenger Vehicles

	Alabama Street Southbound				Lugonia Avenue Westbound				Alabama Street Northbound				Lugonia Avenue Eastbound				
Start Time	Left	Thru	Right	App. Total	Left	Thru	Right	App. Total	Left	Thru	Right	App. Total	Left	Thru	Right	App. Total	Int. Total
04:00 PM	11	83	13	107	96	63	3	162	35	100	91	226	29	62	21	112	607
04:15 PM	28	92	12	132	80	64	9	153	34	128	54	216	26	58	14	98	599
04:30 PM	29	101	8	138	71	58	7	136	30	152	79	261	30	76	17	123	658
04:45 PM	30	114	7	151	89	67	7	163	18	148	76	242	34	73	12	119	675
Total	98	390	40	528	336	252	26	614	117	528	300	945	119	269	64	452	2539
05:00 PM	29	86	3	118	81	77	12	170	16	162	90	268	32	101	12	145	701
05:15 PM	34	112	7	153	79	61	9	149	35	139	114	288	36	68	23	127	717
05:30 PM	38	120	4	162	86	55	11	152	47	129	87	263	26	65	23	114	691
05:45 PM	29	126	3	158	87	68	1	156	18	140	68	226	28	56	28	112	652
Total	130	444	17	591	333	261	33	627	116	570	359	1045	122	290	86	498	2761
Grand Total	228	834	57	1119	669	513	59	1241	233	1098	659	1990	241	559	150	950	5300
Apprch %	20.4	74.5	5.1		53.9	41.3	4.8		11.7	55.2	33.1		25.4	58.8	15.8		
Total %	4.3	15.7	1.1	21.1	12.6	9.7	1.1	23.4	4.4	20.7	12.4	37.5	4.5	10.5	2.8	17.9	

	Alabama Street Southbound				Lugonia Avenue Westbound				Alabama Street Northbound				Lugonia Avenue Eastbound				
Start Time	Left	Thru	Right	App. Total	Left	Thru	Right	App. Total	Left	Thru	Right	App. Total	Left	Thru	Right	App. Total	Int. Total
Peak Hour Analysis From 04:45 PM to 05:30 PM - Peak 1 of 1																	
Peak Hour for Entire Intersection Begins at 04:45 PM																	
04:45 PM	30	114	**7**	151	**89**	67	7	163	18	148	76	242	34	73	12	119	675
05:00 PM	29	86	3	118	81	**77**	**12**	**170**	16	**162**	90	268	32	**101**	12	**145**	701
05:15 PM	34	112	7	153	79	61	9	149	35	139	**114**	**288**	**36**	68	**23**	127	**717**
05:30 PM	**38**	**120**	4	**162**	86	55	11	152	**47**	129	87	263	26	65	23	114	691
Total Volume	131	432	21	584	335	260	39	634	116	578	367	1061	128	307	70	505	2784
% App. Total	22.4	74	3.6		52.8	41	6.2		10.9	54.5	34.6		25.3	60.8	13.9		
PHF	.862	.900	.750	.901	.941	.844	.813	.932	.617	.892	.805	.921	.889	.760	.761	.871	.971

Counts Unlimited Inc.
PO Box 1178
Corona, CA 92878
(951) 268-6268

City of Redlands
N/S: Alabama Street
E/W: Lugonia Avenue
Weather: Sunny

File Name : REDALLUPM
Site Code : 00000037
Start Date : 2/9/2012
Page No : 2

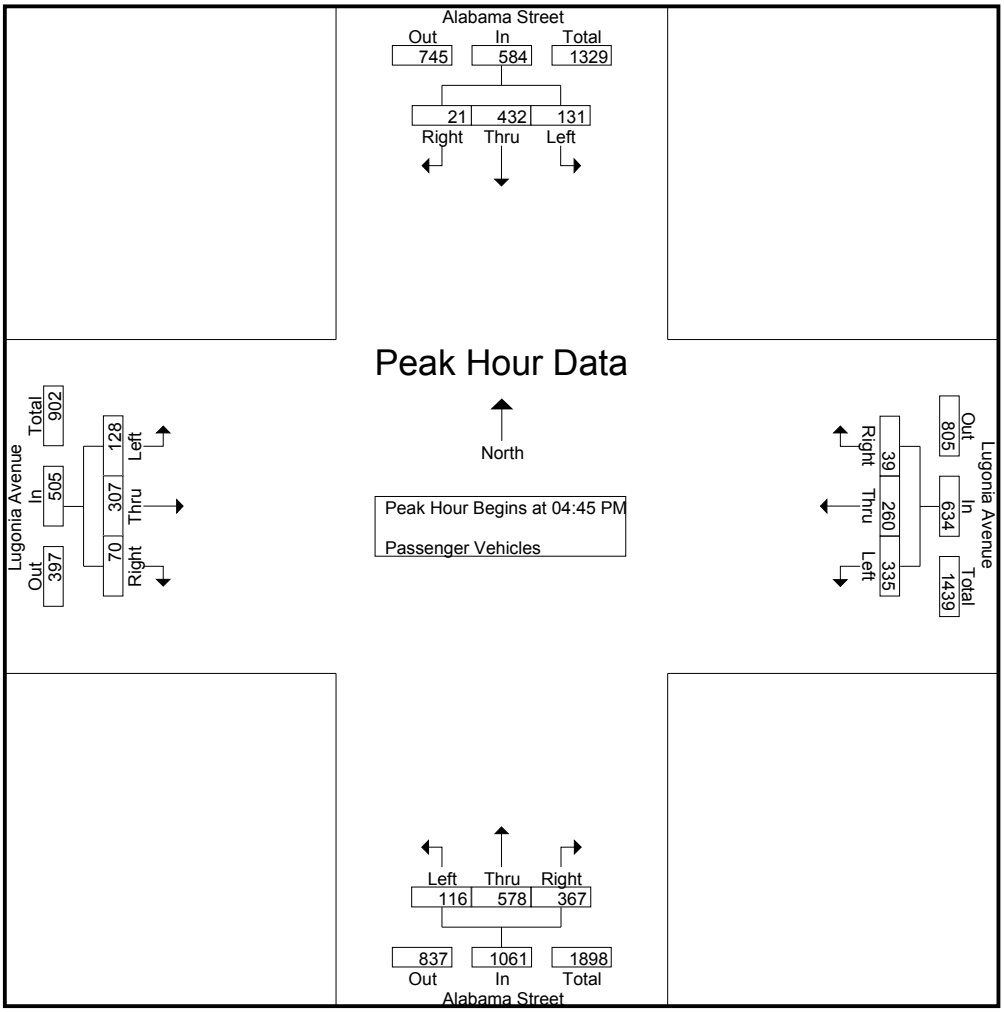

Peak Hour Analysis From 04:45 PM to 05:30 PM - Peak 1 of 1
Peak Hour for Each Approach Begins at:

	04:45 PM				04:45 PM				04:45 PM				04:45 PM			
+0 mins.	30	114	**7**	151	**89**	67	7	163	18	148	76	242	34	73	12	119
+15 mins.	29	86	3	118	81	**77**	**12**	**170**	16	**162**	90	268	32	**101**	12	**145**
+30 mins.	34	112	7	153	79	61	9	149	35	139	**114**	**288**	**36**	68	**23**	127
+45 mins.	**38**	**120**	4	**162**	86	55	11	152	**47**	129	87	263	26	65	23	114
Total Volume	131	432	21	584	335	260	39	634	116	578	367	1061	128	307	70	505
% App. Total	22.4	74	3.6		52.8	41	6.2		10.9	54.5	34.6		25.3	60.8	13.9	
PHF	.862	.900	.750	.901	.941	.844	.813	.932	.617	.892	.805	.921	.889	.760	.761	.871

Counts Unlimited Inc.
PO Box 1178
Corona, CA 92878
(951) 268-6268

City of Redlands
N/S: Alabama Street
E/W: Lugonia Avenue
Weather: Sunny

File Name : REDALLUPM
Site Code : 00000037
Start Date : 2/9/2012
Page No : 1

Groups Printed- Large 2 Axle Vehicles

	Alabama Street Southbound				Lugonia Avenue Westbound				Alabama Street Northbound				Lugonia Avenue Eastbound				
Start Time	Left	Thru	Right	App. Total	Left	Thru	Right	App. Total	Left	Thru	Right	App. Total	Left	Thru	Right	App. Total	Int. Total
04:00 PM	0	0	0	0	0	0	0	0	1	1	0	2	0	0	0	0	2
04:15 PM	2	0	0	2	0	0	1	1	0	0	0	0	1	0	0	1	4
04:30 PM	0	0	0	0	1	0	0	1	0	0	0	0	0	0	0	0	1
04:45 PM	1	0	0	1	0	0	1	1	0	0	0	0	0	1	0	1	3
Total	3	0	0	3	1	0	2	3	1	1	0	2	1	1	0	2	10
05:00 PM	0	1	0	1	0	1	0	1	0	0	1	1	0	0	0	0	3
05:15 PM	1	0	0	1	1	0	1	2	0	0	0	0	0	0	0	0	3
05:30 PM	0	0	0	0	0	1	0	1	0	0	1	1	1	0	0	1	3
05:45 PM	0	0	0	0	0	0	1	1	0	0	0	0	0	0	0	0	1
Total	1	1	0	2	1	2	2	5	0	0	2	2	1	0	0	1	10
Grand Total	4	1	0	5	2	2	4	8	1	1	2	4	2	1	0	3	20
Apprch %	80	20	0		25	25	50		25	25	50		66.7	33.3	0		
Total %	20	5	0	25	10	10	20	40	5	5	10	20	10	5	0	15	

	Alabama Street Southbound				Lugonia Avenue Westbound				Alabama Street Northbound				Lugonia Avenue Eastbound				
Start Time	Left	Thru	Right	App. Total	Left	Thru	Right	App. Total	Left	Thru	Right	App. Total	Left	Thru	Right	App. Total	Int. Total
Peak Hour Analysis From 04:45 PM to 05:30 PM - Peak 1 of 1																	
Peak Hour for Entire Intersection Begins at 04:45 PM																	
04:45 PM	**1**	0	0	**1**	0	0	**1**	1	0	0	0	0	0	**1**	0	**1**	**3**
05:00 PM	0	**1**	0	1	0	**1**	0	1	0	0	**1**	**1**	0	0	0	0	3
05:15 PM	1	0	0	1	**1**	0	1	**2**	0	0	0	0	0	0	0	0	3
05:30 PM	0	0	0	0	0	1	0	1	0	0	1	1	**1**	0	0	1	3
Total Volume	2	1	0	3	1	2	2	5	0	0	2	2	1	1	0	2	12
% App. Total	66.7	33.3	0		20	40	40		0	0	100		50	50	0		
PHF	.500	.250	.000	.750	.250	.500	.500	.625	.000	.000	.500	.500	.250	.250	.000	.500	1.00

Counts Unlimited Inc.
PO Box 1178
Corona, CA 92878
(951) 268-6268

City of Redlands
N/S: Alabama Street
E/W: Lugonia Avenue
Weather: Sunny

File Name : REDALLUPM
Site Code : 00000037
Start Date : 2/9/2012
Page No : 2

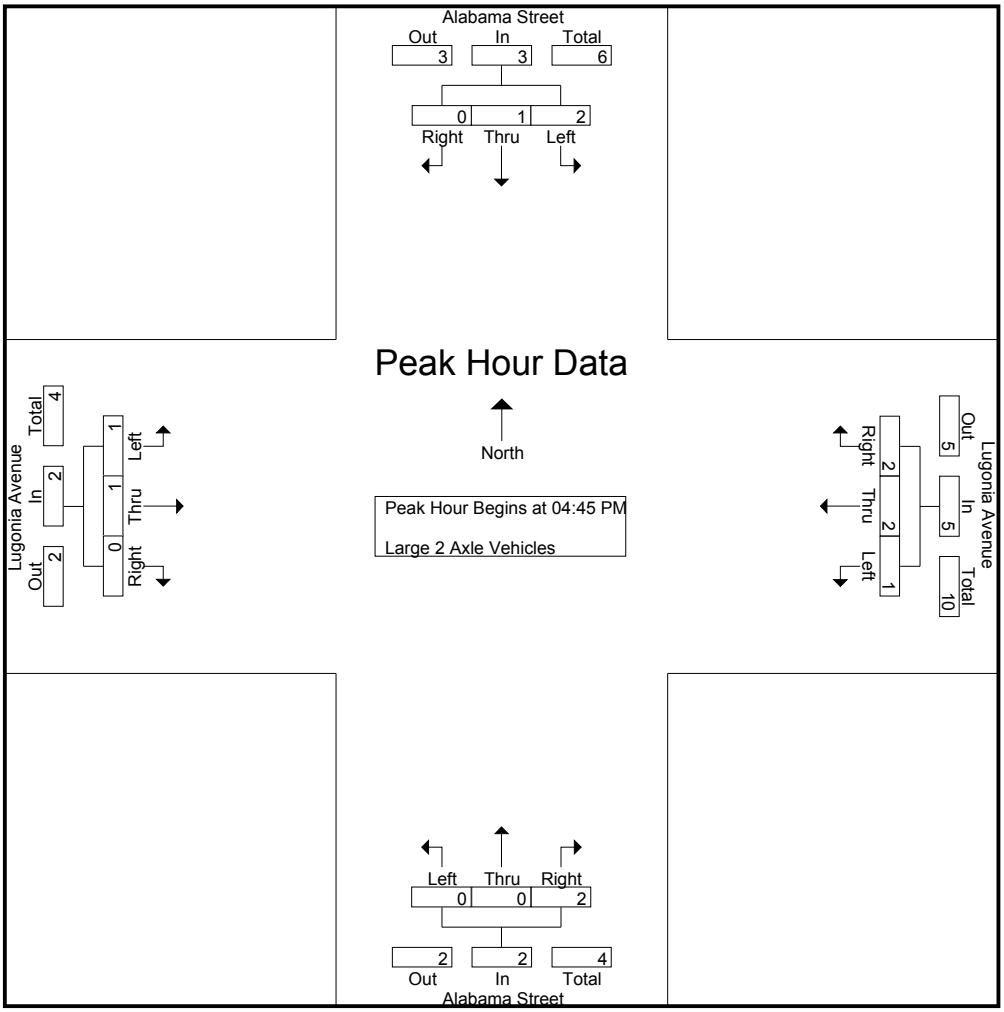

Peak Hour Analysis From 04:45 PM to 05:30 PM - Peak 1 of 1
Peak Hour for Each Approach Begins at:

	04:45 PM				04:45 PM				04:45 PM				04:45 PM			
+0 mins.	**1**	0	0	**1**	0	0	**1**	1	0	0	0	0	0	**1**	0	**1**
+15 mins.	0	**1**	0	1	0	**1**	0	1	0	0	**1**	**1**	0	0	0	0
+30 mins.	1	0	0	1	**1**	0	1	**2**	0	0	0	0	0	0	0	0
+45 mins.	0	0	0	0	0	1	0	1	0	0	1	1	**1**	0	0	1
Total Volume	2	1	0	3	1	2	2	5	0	0	2	2	1	1	0	2
% App. Total	66.7	33.3	0		20	40	40		0	0	100		50	50	0	
PHF	.500	.250	.000	.750	.250	.500	.500	.625	.000	.000	.500	.500	.250	.250	.000	.500

Counts Unlimited Inc.
PO Box 1178
Corona, CA 92878
(951) 268-6268

City of Redlands
N/S: Alabama Street
E/W: Lugonia Avenue
Weather: Sunny

File Name : REDALLUPM
Site Code : 00000037
Start Date : 2/9/2012
Page No : 1

Groups Printed- 3 Axle Vehicles

	Alabama Street Southbound				Lugonia Avenue Westbound				Alabama Street Northbound				Lugonia Avenue Eastbound				
Start Time	Left	Thru	Right	App. Total	Left	Thru	Right	App. Total	Left	Thru	Right	App. Total	Left	Thru	Right	App. Total	Int. Total
04:00 PM	0	0	0	0	0	0	0	0	0	2	0	2	0	0	0	0	2
04:15 PM	0	0	0	0	0	0	1	1	0	0	0	0	0	0	0	0	1
04:30 PM	0	0	0	0	0	0	0	0	0	0	0	0	0	0	1	1	1
04:45 PM	0	0	0	0	0	0	0	0	0	0	0	0	0	0	0	0	0
Total	0	0	0	0	0	0	1	1	0	2	0	2	0	0	1	1	4
05:00 PM	0	0	0	0	1	0	0	1	0	0	0	0	0	0	0	0	1
05:15 PM	0	0	0	0	0	0	0	0	0	0	0	0	0	0	0	0	0
05:30 PM	0	1	0	1	0	0	0	0	0	0	0	0	0	0	0	0	1
05:45 PM	0	1	0	1	0	0	0	0	0	0	0	0	0	0	0	0	1
Total	0	2	0	2	1	0	0	1	0	0	0	0	0	0	0	0	3
Grand Total	0	2	0	2	1	0	1	2	0	2	0	2	0	0	1	1	7
Apprch %	0	100	0		50	0	50		0	100	0		0	0	100		
Total %	0	28.6	0	28.6	14.3	0	14.3	28.6	0	28.6	0	28.6	0	0	14.3	14.3	

	Alabama Street Southbound				Lugonia Avenue Westbound				Alabama Street Northbound				Lugonia Avenue Eastbound				
Start Time	Left	Thru	Right	App. Total	Left	Thru	Right	App. Total	Left	Thru	Right	App. Total	Left	Thru	Right	App. Total	Int. Total
Peak Hour Analysis From 04:45 PM to 05:30 PM - Peak 1 of 1																	
Peak Hour for Entire Intersection Begins at 04:45 PM																	
04:45 PM	0	0	0	0	0	0	0	0	0	0	0	0	0	0	0	0	0
05:00 PM	0	0	0	0	**1**	0	0	**1**	0	0	0	0	0	0	0	0	**1**
05:15 PM	0	0	0	0	0	0	0	0	0	0	0	0	0	0	0	0	0
05:30 PM	0	**1**	0	**1**	0	0	0	0	0	0	0	0	0	0	0	0	1
Total Volume	0	1	0	1	1	0	0	1	0	0	0	0	0	0	0	0	2
% App. Total	0	100	0		100	0	0		0	0	0		0	0	0		
PHF	.000	.250	.000	.250	.250	.000	.000	.250	.000	.000	.000	.000	.000	.000	.000	.000	.500

Counts Unlimited Inc.
PO Box 1178
Corona, CA 92878
(951) 268-6268

City of Redlands
N/S: Alabama Street
E/W: Lugonia Avenue
Weather: Sunny

File Name : REDALLUPM
Site Code : 00000037
Start Date : 2/9/2012
Page No : 2

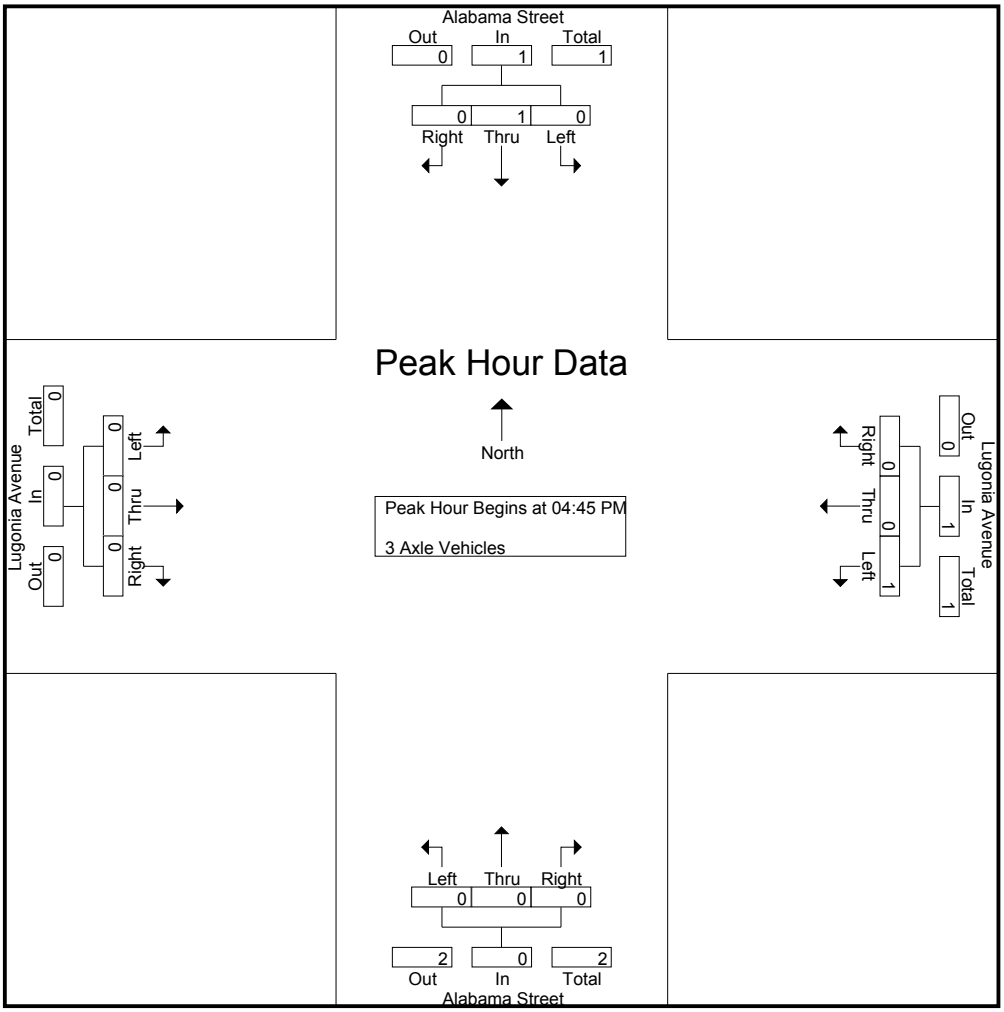

Peak Hour Analysis From 04:45 PM to 05:30 PM - Peak 1 of 1
Peak Hour for Each Approach Begins at:

	04:45 PM				04:45 PM				04:45 PM				04:45 PM			
+0 mins.	0	0	0	0	0	0	0	0	0	0	0	0	0	0	0	0
+15 mins.	0	0	0	0	**1**	0	0	**1**	0	0	0	0	0	0	0	0
+30 mins.	0	0	0	0	0	0	0	0	0	0	0	0	0	0	0	0
+45 mins.	0	**1**	0	**1**	0	0	0	0	0	0	0	0	0	0	0	0
Total Volume	0	1	0	1	1	0	0	1	0	0	0	0	0	0	0	0
% App. Total	0	100	0		100	0	0		0	0	0		0	0	0	
PHF	.000	.250	.000	.250	.250	.000	.000	.250	.000	.000	.000	.000	.000	.000	.000	.000

Counts Unlimited Inc.
PO Box 1178
Corona, CA 92878
(951) 268-6268

City of Redlands
N/S: Alabama Street
E/W: Lugonia Avenue
Weather: Sunny

File Name : REDALLUPM
Site Code : 00000037
Start Date : 2/9/2012
Page No : 1

Groups Printed- 4+ Axle Trucks

	Alabama Street Southbound				Lugonia Avenue Westbound				Alabama Street Northbound				Lugonia Avenue Eastbound				
Start Time	Left	Thru	Right	App. Total	Left	Thru	Right	App. Total	Left	Thru	Right	App. Total	Left	Thru	Right	App. Total	Int. Total
04:00 PM	0	2	0	2	0	0	0	0	0	2	0	2	0	0	0	0	4
04:15 PM	0	5	0	5	0	0	1	1	0	4	0	4	0	0	0	0	10
04:30 PM	0	1	0	1	1	0	0	1	0	1	0	1	0	0	0	0	3
04:45 PM	0	2	0	2	0	0	0	0	0	3	0	3	0	0	0	0	5
Total	0	10	0	10	1	0	1	2	0	10	0	10	0	0	0	0	22
05:00 PM	0	6	0	6	0	0	0	0	0	0	0	0	0	0	0	0	6
05:15 PM	0	2	0	2	0	0	0	0	0	2	0	2	0	0	0	0	4
05:30 PM	0	3	0	3	1	0	0	1	0	0	0	0	0	0	0	0	4
05:45 PM	1	3	0	4	1	1	0	2	0	1	0	1	0	1	0	1	8
Total	1	14	0	15	2	1	0	3	0	3	0	3	0	1	0	1	22
Grand Total	1	24	0	25	3	1	1	5	0	13	0	13	0	1	0	1	44
Apprch %	4	96	0		60	20	20		0	100	0		0	100	0		
Total %	2.3	54.5	0	56.8	6.8	2.3	2.3	11.4	0	29.5	0	29.5	0	2.3	0	2.3	

	Alabama Street Southbound				Lugonia Avenue Westbound				Alabama Street Northbound				Lugonia Avenue Eastbound				
Start Time	Left	Thru	Right	App. Total	Left	Thru	Right	App. Total	Left	Thru	Right	App. Total	Left	Thru	Right	App. Total	Int. Total
Peak Hour Analysis From 04:45 PM to 05:30 PM - Peak 1 of 1																	
Peak Hour for Entire Intersection Begins at 04:45 PM																	
04:45 PM	0	2	0	2	0	0	0	0	0	**3**	0	**3**	0	0	0	0	5
05:00 PM	0	**6**	0	**6**	0	0	0	0	0	0	0	0	0	0	0	0	**6**
05:15 PM	0	2	0	2	0	0	0	0	0	2	0	2	0	0	0	0	4
05:30 PM	0	3	0	3	**1**	0	0	**1**	0	0	0	0	0	0	0	0	4
Total Volume	0	13	0	13	1	0	0	1	0	5	0	5	0	0	0	0	19
% App. Total	0	100	0		100	0	0		0	100	0		0	0	0		
PHF	.000	.542	.000	.542	.250	.000	.000	.250	.000	.417	.000	.417	.000	.000	.000	.000	.792

Counts Unlimited Inc.
PO Box 1178
Corona, CA 92878
(951) 268-6268

City of Redlands
N/S: Alabama Street
E/W: Lugonia Avenue
Weather: Sunny

File Name : REDALLUPM
Site Code : 00000037
Start Date : 2/9/2012
Page No : 2

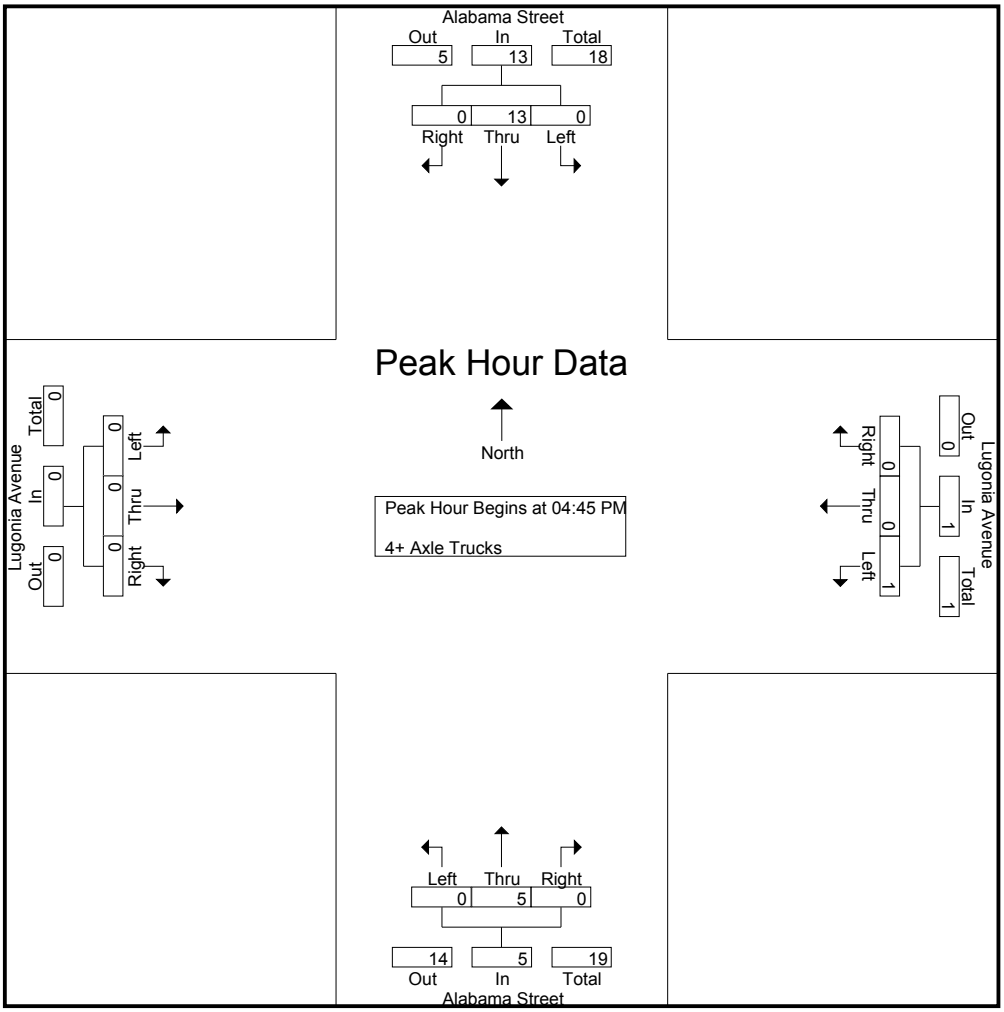

Peak Hour Analysis From 04:45 PM to 05:30 PM - Peak 1 of 1
Peak Hour for Each Approach Begins at:

	04:45 PM				04:45 PM				04:45 PM				04:45 PM			
+0 mins.	0	2	0	2	0	0	0	0	0	**3**	0	**3**	0	0	0	0
+15 mins.	0	**6**	0	**6**	0	0	0	0	0	0	0	0	0	0	0	0
+30 mins.	0	2	0	2	0	0	0	0	0	2	0	2	0	0	0	0
+45 mins.	0	3	0	3	**1**	0	0	**1**	0	0	0	0	0	0	0	0
Total Volume	0	13	0	13	1	0	0	1	0	5	0	5	0	0	0	0
% App. Total	0	100	0		100	0	0		0	100	0		0	0	0	
PHF	.000	.542	.000	.542	.250	.000	.000	.250	.000	.417	.000	.417	.000	.000	.000	.000

Counts Unlimited Inc.
PO Box 1178
Corona, CA 92878
(951) 268-6268

City of Redlands
N/S: Alabama Street
E/W: I-10 Westbound Ramps
Weather: Sunny

File Name : REDAL10WAM
Site Code : 00000044
Start Date : 2/9/2012
Page No : 1

Groups Printed- Passenger Vehicles - Large 2 Axle Vehicles - 3 Axle vehicles - 4+ Axle Trucks

	Alabama Street Southbound				I-10 Westbound Off Ramp Westbound				Alabama Street Northbound				I-10 Westbound On Ramp Eastbound				
Start Time	Left	Thru	Right	App. Total	Left	Thru	Right	App. Total	Left	Thru	Right	App. Total	Left	Thru	Right	App. Total	Int. Total
07:00 AM	0	53	22	75	44	71	24	139	31	80	0	111	0	0	0	0	325
07:15 AM	0	62	28	90	48	80	28	156	92	84	0	176	0	0	0	0	422
07:30 AM	0	78	44	122	49	89	52	190	93	93	0	186	0	0	0	0	498
07:45 AM	0	80	24	104	78	66	86	230	90	115	0	205	0	0	0	0	539
Total	0	273	118	391	219	306	190	715	306	372	0	678	0	0	0	0	1784
08:00 AM	0	88	25	113	72	77	66	215	82	94	0	176	0	0	0	0	504
08:15 AM	0	74	36	110	42	55	45	142	71	108	0	179	0	0	0	0	431
08:30 AM	0	76	24	100	54	78	36	168	65	83	0	148	0	0	0	0	416
08:45 AM	0	75	31	106	78	76	57	211	58	108	0	166	0	0	0	0	483
Total	0	313	116	429	246	286	204	736	276	393	0	669	0	0	0	0	1834
Grand Total	0	586	234	820	465	592	394	1451	582	765	0	1347	0	0	0	0	3618
Apprch %	0	71.5	28.5		32	40.8	27.2		43.2	56.8	0		0	0	0		
Total %	0	16.2	6.5	22.7	12.9	16.4	10.9	40.1	16.1	21.1	0	37.2	0	0	0	0	
Passenger Vehicles	0	565	207	772	455	571	383	1409	560	704	0	1264	0	0	0	0	3445
% Passenger Vehicles	0	96.4	88.5	94.1	97.8	96.5	97.2	97.1	96.2	92	0	93.8	0	0	0	0	95.2
Large 2 Axle Vehicles	0	11	3	14	7	9	1	17	12	18	0	30	0	0	0	0	61
% Large 2 Axle Vehicles	0	1.9	1.3	1.7	1.5	1.5	0.3	1.2	2.1	2.4	0	2.2	0	0	0	0	1.7
3 Axle vehicles	0	2	3	5	0	6	0	6	3	10	0	13	0	0	0	0	24
% 3 Axle vehicles	0	0.3	1.3	0.6	0	1	0	0.4	0.5	1.3	0	1	0	0	0	0	0.7
4+ Axle Trucks	0	8	21	29	3	6	10	19	7	33	0	40	0	0	0	0	88
% 4+ Axle Trucks	0	1.4	9	3.5	0.6	1	2.5	1.3	1.2	4.3	0	3	0	0	0	0	2.4

	Alabama Street Southbound				I-10 Westbound Off Ramp Westbound				Alabama Street Northbound				I-10 Westbound On Ramp Eastbound				
Start Time	Left	Thru	Right	App. Total	Left	Thru	Right	App. Total	Left	Thru	Right	App. Total	Left	Thru	Right	App. Total	Int. Total
Peak Hour Analysis From 07:00 AM to 08:45 AM - Peak 1 of 1																	
Peak Hour for Entire Intersection Begins at 07:30 AM																	
07:30 AM	0	78	**44**	**122**	49	**89**	52	190	**93**	93	0	186	0	0	0	0	498
07:45 AM	0	80	24	104	**78**	66	**86**	**230**	90	**115**	0	**205**	0	0	0	0	**539**
08:00 AM	0	**88**	25	113	72	77	66	215	82	94	0	176	0	0	0	0	504
08:15 AM	0	74	36	110	42	55	45	142	71	108	0	179	0	0	0	0	431
Total Volume	0	320	129	449	241	287	249	777	336	410	0	746	0	0	0	0	1972
% App. Total	0	71.3	28.7		31	36.9	32		45	55	0		0	0	0		
PHF	.000	.909	.733	.920	.772	.806	.724	.845	.903	.891	.000	.910	.000	.000	.000	.000	.915

Counts Unlimited Inc.
PO Box 1178
Corona, CA 92878
(951) 268-6268

City of Redlands
N/S: Alabama Street
E/W: I-10 Westbound Ramps
Weather: Sunny

File Name : REDAL10WAM
Site Code : 00000044
Start Date : 2/9/2012
Page No : 2

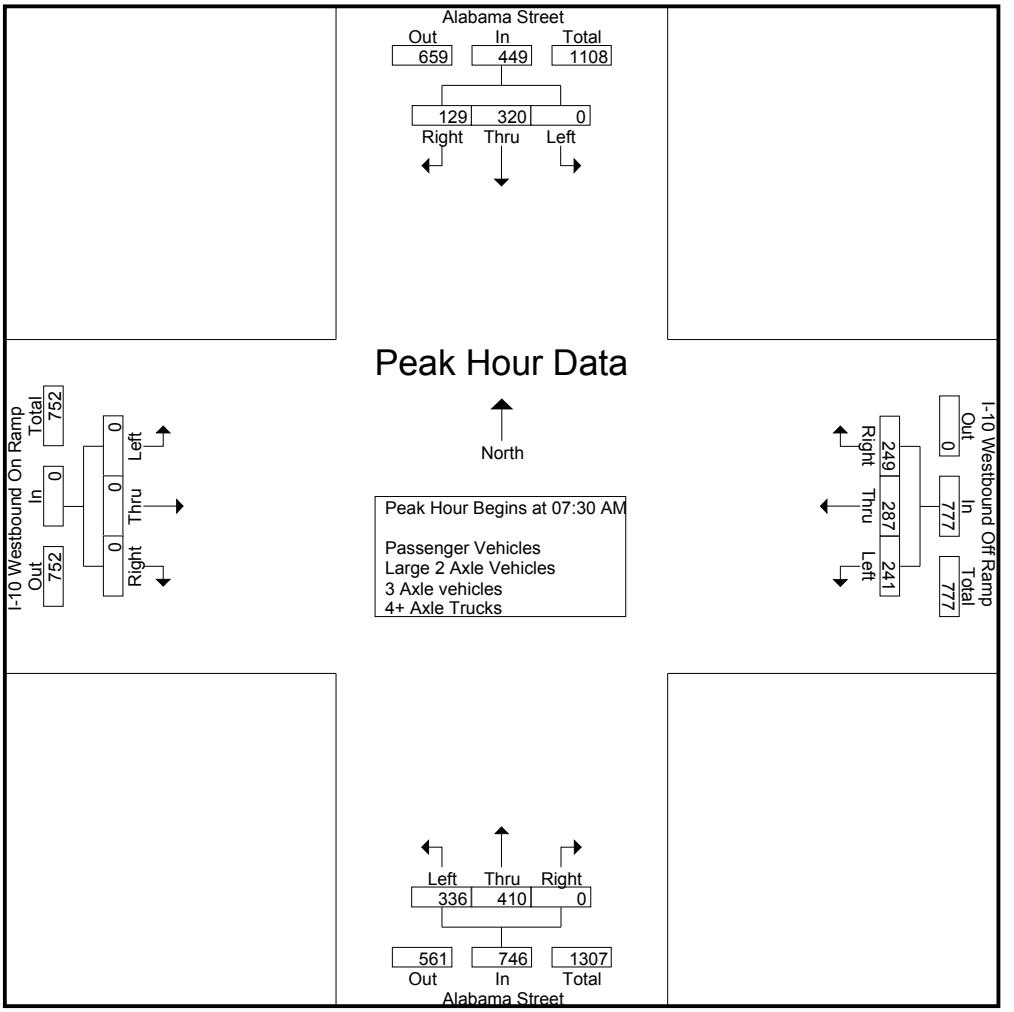

Peak Hour Analysis From 07:00 AM to 08:45 AM - Peak 1 of 1
Peak Hour for Each Approach Begins at:

	07:30 AM				07:15 AM				07:30 AM				07:00 AM			
+0 mins.	0	78	**44**	**122**	48	80	28	156	**93**	93	0	186	0	0	0	0
+15 mins.	0	80	24	104	49	**89**	52	190	90	**115**	0	**205**	0	0	0	0
+30 mins.	0	**88**	25	113	**78**	66	**86**	**230**	82	94	0	176	0	0	0	0
+45 mins.	0	74	36	110	72	77	66	215	71	108	0	179	0	0	0	0
Total Volume	0	320	129	449	247	312	232	791	336	410	0	746	0	0	0	0
% App. Total	0	71.3	28.7		31.2	39.4	29.3		45	55	0		0	0	0	
PHF	.000	.909	.733	.920	.792	.876	.674	.860	.903	.891	.000	.910	.000	.000	.000	.000

Counts Unlimited Inc.
PO Box 1178
Corona, CA 92878
(951) 268-6268

City of Redlands
N/S: Alabama Street
E/W: I-10 Westbound Ramps
Weather: Sunny

File Name : REDAL10WAM
Site Code : 00000044
Start Date : 2/9/2012
Page No : 1

Groups Printed- Passenger Vehicles

	Alabama Street Southbound				I-10 Westbound Off Ramp Westbound				Alabama Street Northbound				I-10 Westbound On Ramp Eastbound				
Start Time	Left	Thru	Right	App. Total	Left	Thru	Right	App. Total	Left	Thru	Right	App. Total	Left	Thru	Right	App. Total	Int. Total
07:00 AM	0	52	21	73	42	71	24	137	28	74	0	102	0	0	0	0	312
07:15 AM	0	57	25	82	46	78	27	151	90	80	0	170	0	0	0	0	403
07:30 AM	0	76	39	115	49	87	50	186	91	86	0	177	0	0	0	0	478
07:45 AM	0	78	21	99	77	65	85	227	87	105	0	192	0	0	0	0	518
Total	0	263	106	369	214	301	186	701	296	345	0	641	0	0	0	0	1711
08:00 AM	0	88	21	109	71	76	65	212	77	87	0	164	0	0	0	0	485
08:15 AM	0	67	32	99	42	51	42	135	69	97	0	166	0	0	0	0	400
08:30 AM	0	73	21	94	54	72	34	160	63	79	0	142	0	0	0	0	396
08:45 AM	0	74	27	101	74	71	56	201	55	96	0	151	0	0	0	0	453
Total	0	302	101	403	241	270	197	708	264	359	0	623	0	0	0	0	1734
Grand Total	0	565	207	772	455	571	383	1409	560	704	0	1264	0	0	0	0	3445
Apprch %	0	73.2	26.8		32.3	40.5	27.2		44.3	55.7	0		0	0	0		
Total %	0	16.4	6	22.4	13.2	16.6	11.1	40.9	16.3	20.4	0	36.7	0	0	0	0	

	Alabama Street Southbound				I-10 Westbound Off Ramp Westbound				Alabama Street Northbound				I-10 Westbound On Ramp Eastbound				
Start Time	Left	Thru	Right	App. Total	Left	Thru	Right	App. Total	Left	Thru	Right	App. Total	Left	Thru	Right	App. Total	Int. Total
Peak Hour Analysis From 07:30 AM to 08:15 AM - Peak 1 of 1																	
Peak Hour for Entire Intersection Begins at 07:30 AM																	
07:30 AM	0	76	**39**	**115**	49	**87**	50	186	**91**	86	0	177	0	0	0	0	478
07:45 AM	0	78	21	99	**77**	65	**85**	**227**	87	**105**	0	**192**	0	0	0	0	**518**
08:00 AM	0	**88**	21	109	71	76	65	212	77	87	0	164	0	0	0	0	485
08:15 AM	0	67	32	99	42	51	42	135	69	97	0	166	0	0	0	0	400
Total Volume	0	309	113	422	239	279	242	760	324	375	0	699	0	0	0	0	1881
% App. Total	0	73.2	26.8		31.4	36.7	31.8		46.4	53.6	0		0	0	0		
PHF	.000	.878	.724	.917	.776	.802	.712	.837	.890	.893	.000	.910	.000	.000	.000	.000	.908

Counts Unlimited Inc.
PO Box 1178
Corona, CA 92878
(951) 268-6268

City of Redlands
N/S: Alabama Street
E/W: I-10 Westbound Ramps
Weather: Sunny

File Name : REDAL10WAM
Site Code : 00000044
Start Date : 2/9/2012
Page No : 2

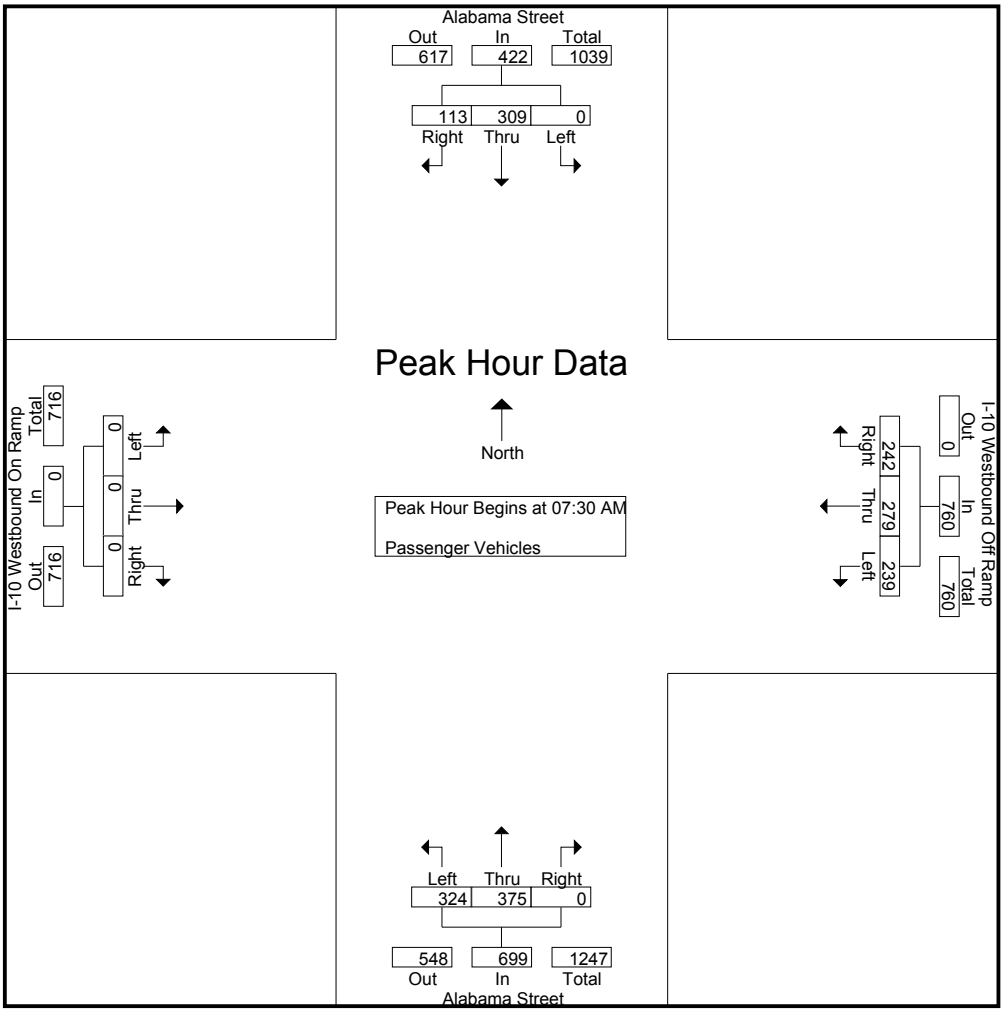

Peak Hour Analysis From 07:30 AM to 08:15 AM - Peak 1 of 1
Peak Hour for Each Approach Begins at:

	07:30 AM				07:30 AM				07:30 AM				07:30 AM			
+0 mins.	0	76	**39**	**115**	49	**87**	50	186	**91**	86	0	177	0	0	0	0
+15 mins.	0	78	21	99	**77**	65	**85**	**227**	87	**105**	0	**192**	0	0	0	0
+30 mins.	0	**88**	21	109	71	76	65	212	77	87	0	164	0	0	0	0
+45 mins.	0	67	32	99	42	51	42	135	69	97	0	166	0	0	0	0
Total Volume	0	309	113	422	239	279	242	760	324	375	0	699	0	0	0	0
% App. Total	0	73.2	26.8		31.4	36.7	31.8		46.4	53.6	0		0	0	0	
PHF	.000	.878	.724	.917	.776	.802	.712	.837	.890	.893	.000	.910	.000	.000	.000	.000

Counts Unlimited Inc.
PO Box 1178
Corona, CA 92878
(951) 268-6268

City of Redlands
N/S: Alabama Street
E/W: I-10 Westbound Ramps
Weather: Sunny

File Name : REDAL10WAM
Site Code : 00000044
Start Date : 2/9/2012
Page No : 1

Groups Printed- Large 2 Axle Vehicles

	Alabama Street Southbound				I-10 Westbound Off Ramp Westbound				Alabama Street Northbound				I-10 Westbound On Ramp Eastbound				
Start Time	Left	Thru	Right	App. Total	Left	Thru	Right	App. Total	Left	Thru	Right	App. Total	Left	Thru	Right	App. Total	Int. Total
07:00 AM	0	1	0	1	2	0	0	2	1	2	0	3	0	0	0	0	6
07:15 AM	0	3	0	3	2	0	0	2	2	1	0	3	0	0	0	0	8
07:30 AM	0	0	0	0	0	0	0	0	2	2	0	4	0	0	0	0	4
07:45 AM	0	1	0	1	1	0	1	2	2	3	0	5	0	0	0	0	8
Total	0	5	0	5	5	0	1	6	7	8	0	15	0	0	0	0	26
08:00 AM	0	0	1	1	0	1	0	1	4	0	0	4	0	0	0	0	6
08:15 AM	0	3	1	4	0	4	0	4	0	6	0	6	0	0	0	0	14
08:30 AM	0	2	0	2	0	2	0	2	1	0	0	1	0	0	0	0	5
08:45 AM	0	1	1	2	2	2	0	4	0	4	0	4	0	0	0	0	10
Total	0	6	3	9	2	9	0	11	5	10	0	15	0	0	0	0	35
Grand Total	0	11	3	14	7	9	1	17	12	18	0	30	0	0	0	0	61
Apprch %	0	78.6	21.4		41.2	52.9	5.9		40	60	0		0	0	0		
Total %	0	18	4.9	23	11.5	14.8	1.6	27.9	19.7	29.5	0	49.2	0	0	0	0	

	Alabama Street Southbound				I-10 Westbound Off Ramp Westbound				Alabama Street Northbound				I-10 Westbound On Ramp Eastbound				
Start Time	Left	Thru	Right	App. Total	Left	Thru	Right	App. Total	Left	Thru	Right	App. Total	Left	Thru	Right	App. Total	Int. Total
Peak Hour Analysis From 07:30 AM to 08:15 AM - Peak 1 of 1																	
Peak Hour for Entire Intersection Begins at 07:30 AM																	
07:30 AM	0	0	0	0	0	0	0	0	2	2	0	4	0	0	0	0	4
07:45 AM	0	1	0	1	**1**	0	**1**	2	2	3	0	5	0	0	0	0	8
08:00 AM	0	0	**1**	1	0	1	0	1	**4**	0	0	4	0	0	0	0	6
08:15 AM	0	**3**	1	**4**	0	**4**	0	**4**	0	**6**	0	**6**	0	0	0	0	**14**
Total Volume	0	4	2	6	1	5	1	7	8	11	0	19	0	0	0	0	32
% App. Total	0	66.7	33.3		14.3	71.4	14.3		42.1	57.9	0		0	0	0		
PHF	.000	.333	.500	.375	.250	.313	.250	.438	.500	.458	.000	.792	.000	.000	.000	.000	.571

Counts Unlimited Inc.
PO Box 1178
Corona, CA 92878
(951) 268-6268

City of Redlands
N/S: Alabama Street
E/W: I-10 Westbound Ramps
Weather: Sunny

File Name : REDAL10WAM
Site Code : 00000044
Start Date : 2/9/2012
Page No : 2

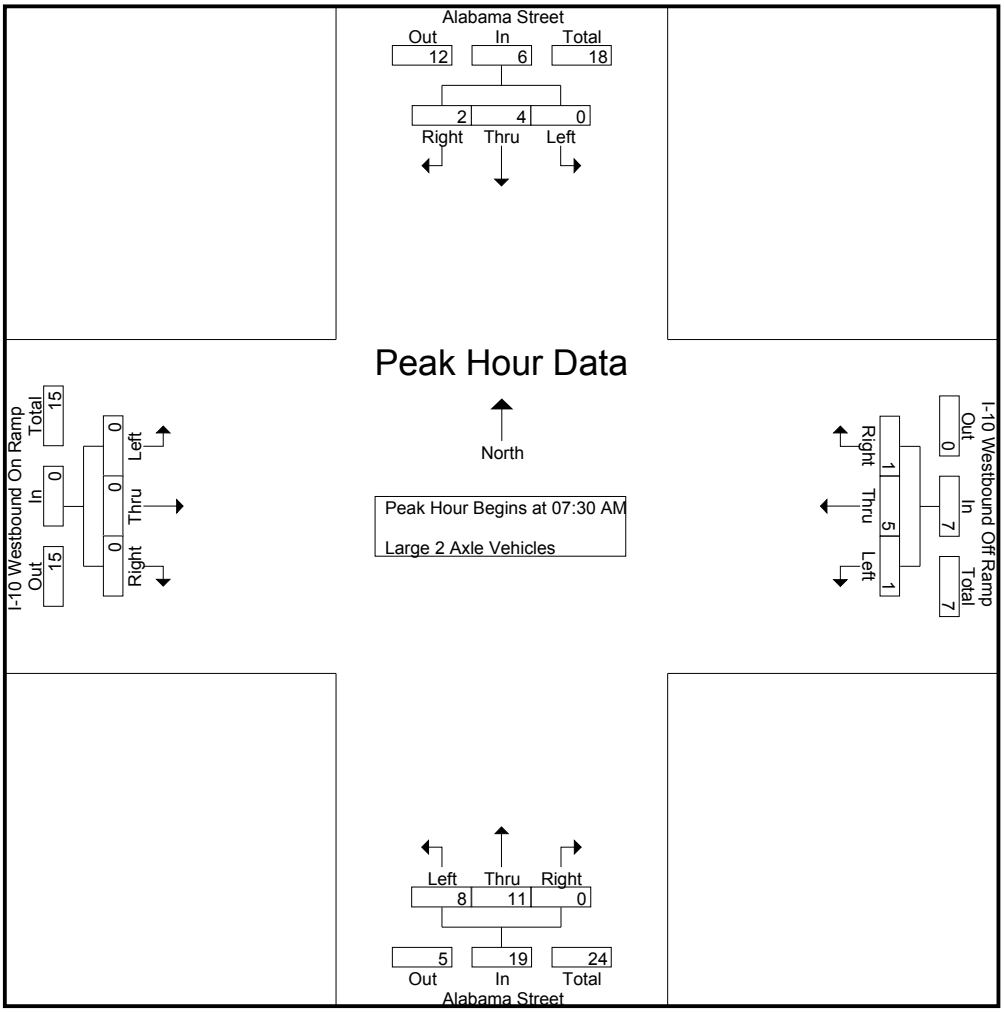

Peak Hour Analysis From 07:30 AM to 08:15 AM - Peak 1 of 1
Peak Hour for Each Approach Begins at:

	07:30 AM				07:30 AM				07:30 AM				07:30 AM			
+0 mins.	0	0	0	0	0	0	0	0	2	2	0	4	0	0	0	0
+15 mins.	0	1	0	1	**1**	0	**1**	2	2	3	0	5	0	0	0	0
+30 mins.	0	0	**1**	1	0	1	0	1	**4**	0	0	4	0	0	0	0
+45 mins.	0	**3**	1	**4**	0	**4**	0	**4**	0	**6**	0	**6**	0	0	0	0
Total Volume	0	4	2	6	1	5	1	7	8	11	0	19	0	0	0	0
% App. Total	0	66.7	33.3		14.3	71.4	14.3		42.1	57.9	0		0	0	0	
PHF	.000	.333	.500	.375	.250	.313	.250	.438	.500	.458	.000	.792	.000	.000	.000	.000

Counts Unlimited Inc.
PO Box 1178
Corona, CA 92878
(951) 268-6268

City of Redlands
N/S: Alabama Street
E/W: I-10 Westbound Ramps
Weather: Sunny

File Name : REDAL10WAM
Site Code : 00000044
Start Date : 2/9/2012
Page No : 1

Groups Printed- 3 Axle vehicles

	Alabama Street Southbound				I-10 Westbound Off Ramp Westbound				Alabama Street Northbound				I-10 Westbound On Ramp Eastbound				
Start Time	Left	Thru	Right	App. Total	Left	Thru	Right	App. Total	Left	Thru	Right	App. Total	Left	Thru	Right	App. Total	Int. Total
07:00 AM	0	0	0	0	0	0	0	0	1	1	0	2	0	0	0	0	2
07:15 AM	0	0	0	0	0	1	0	1	0	1	0	1	0	0	0	0	2
07:30 AM	0	1	2	3	0	1	0	1	0	2	0	2	0	0	0	0	6
07:45 AM	0	0	0	0	0	0	0	0	1	2	0	3	0	0	0	0	3
Total	0	1	2	3	0	2	0	2	2	6	0	8	0	0	0	0	13
08:00 AM	0	0	0	0	0	0	0	0	0	1	0	1	0	0	0	0	1
08:15 AM	0	1	0	1	0	0	0	0	0	1	0	1	0	0	0	0	2
08:30 AM	0	0	0	0	0	3	0	3	0	0	0	0	0	0	0	0	3
08:45 AM	0	0	1	1	0	1	0	1	1	2	0	3	0	0	0	0	5
Total	0	1	1	2	0	4	0	4	1	4	0	5	0	0	0	0	11
Grand Total	0	2	3	5	0	6	0	6	3	10	0	13	0	0	0	0	24
Apprch %	0	40	60		0	100	0		23.1	76.9	0		0	0	0		
Total %	0	8.3	12.5	20.8	0	25	0	25	12.5	41.7	0	54.2	0	0	0	0	

	Alabama Street Southbound				I-10 Westbound Off Ramp Westbound				Alabama Street Northbound				I-10 Westbound On Ramp Eastbound				
Start Time	Left	Thru	Right	App. Total	Left	Thru	Right	App. Total	Left	Thru	Right	App. Total	Left	Thru	Right	App. Total	Int. Total
Peak Hour Analysis From 07:30 AM to 08:15 AM - Peak 1 of 1																	
Peak Hour for Entire Intersection Begins at 07:30 AM																	
07:30 AM	0	**1**	**2**	**3**	0	**1**	0	**1**	0	**2**	0	2	0	0	0	0	**6**
07:45 AM	0	0	0	0	0	0	0	0	**1**	2	0	**3**	0	0	0	0	3
08:00 AM	0	0	0	0	0	0	0	0	0	1	0	1	0	0	0	0	1
08:15 AM	0	1	0	1	0	0	0	0	0	1	0	1	0	0	0	0	2
Total Volume	0	2	2	4	0	1	0	1	1	6	0	7	0	0	0	0	12
% App. Total	0	50	50		0	100	0		14.3	85.7	0		0	0	0		
PHF	.000	.500	.250	.333	.000	.250	.000	.250	.250	.750	.000	.583	.000	.000	.000	.000	.500

Counts Unlimited Inc.
PO Box 1178
Corona, CA 92878
(951) 268-6268

City of Redlands
N/S: Alabama Street
E/W: I-10 Westbound Ramps
Weather: Sunny

File Name : REDAL10WAM
Site Code : 00000044
Start Date : 2/9/2012
Page No : 2

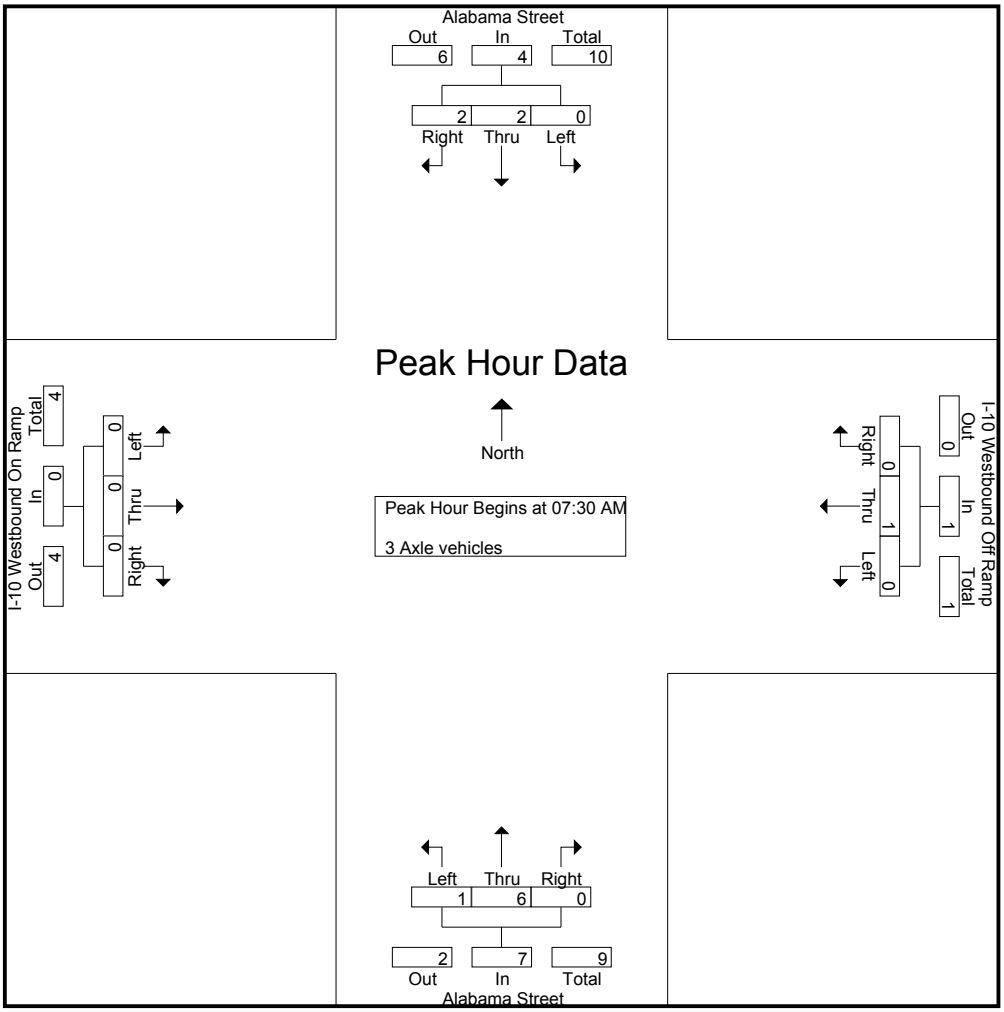

Peak Hour Analysis From 07:30 AM to 08:15 AM - Peak 1 of 1
Peak Hour for Each Approach Begins at:

	07:30 AM				07:30 AM				07:30 AM				07:30 AM			
+0 mins.	0	**1**	**2**	**3**	0	**1**	0	**1**	0	**2**	0	2	0	0	0	0
+15 mins.	0	0	0	0	0	0	0	0	**1**	2	0	**3**	0	0	0	0
+30 mins.	0	0	0	0	0	0	0	0	0	1	0	1	0	0	0	0
+45 mins.	0	1	0	1	0	0	0	0	0	1	0	1	0	0	0	0
Total Volume	0	2	2	4	0	1	0	1	1	6	0	7	0	0	0	0
% App. Total	0	50	50		0	100	0		14.3	85.7	0		0	0	0	
PHF	.000	.500	.250	.333	.000	.250	.000	.250	.250	.750	.000	.583	.000	.000	.000	.000

Counts Unlimited Inc.
PO Box 1178
Corona, CA 92878
(951) 268-6268

City of Redlands
N/S: Alabama Street
E/W: I-10 Westbound Ramps
Weather: Sunny

File Name : REDAL10WAM
Site Code : 00000044
Start Date : 2/9/2012
Page No : 1

Groups Printed- 4+ Axle Trucks

	Alabama Street Southbound				I-10 Westbound Off Ramp Westbound				Alabama Street Northbound				I-10 Westbound On Ramp Eastbound				
Start Time	Left	Thru	Right	App. Total	Left	Thru	Right	App. Total	Left	Thru	Right	App. Total	Left	Thru	Right	App. Total	Int. Total
07:00 AM	0	0	1	1	0	0	0	0	1	3	0	4	0	0	0	0	5
07:15 AM	0	2	3	5	0	1	1	2	0	2	0	2	0	0	0	0	9
07:30 AM	0	1	3	4	0	1	2	3	0	3	0	3	0	0	0	0	10
07:45 AM	0	1	3	4	0	1	0	1	0	5	0	5	0	0	0	0	10
Total	0	4	10	14	0	3	3	6	1	13	0	14	0	0	0	0	34
08:00 AM	0	0	3	3	1	0	1	2	1	6	0	7	0	0	0	0	12
08:15 AM	0	3	3	6	0	0	3	3	2	4	0	6	0	0	0	0	15
08:30 AM	0	1	3	4	0	1	2	3	1	4	0	5	0	0	0	0	12
08:45 AM	0	0	2	2	2	2	1	5	2	6	0	8	0	0	0	0	15
Total	0	4	11	15	3	3	7	13	6	20	0	26	0	0	0	0	54
Grand Total	0	8	21	29	3	6	10	19	7	33	0	40	0	0	0	0	88
Apprch %	0	27.6	72.4		15.8	31.6	52.6		17.5	82.5	0		0	0	0		
Total %	0	9.1	23.9	33	3.4	6.8	11.4	21.6	8	37.5	0	45.5	0	0	0	0	

	Alabama Street Southbound				I-10 Westbound Off Ramp Westbound				Alabama Street Northbound				I-10 Westbound On Ramp Eastbound				
Start Time	Left	Thru	Right	App. Total	Left	Thru	Right	App. Total	Left	Thru	Right	App. Total	Left	Thru	Right	App. Total	Int. Total
Peak Hour Analysis From 07:30 AM to 08:15 AM - Peak 1 of 1																	
Peak Hour for Entire Intersection Begins at 07:30 AM																	
07:30 AM	0	1	**3**	4	0	**1**	2	**3**	0	3	0	3	0	0	0	0	10
07:45 AM	0	1	3	4	0	1	0	1	0	5	0	5	0	0	0	0	10
08:00 AM	0	0	3	3	**1**	0	1	2	1	**6**	0	**7**	0	0	0	0	12
08:15 AM	0	**3**	3	**6**	0	0	**3**	3	**2**	4	0	6	0	0	0	0	**15**
Total Volume	0	5	12	17	1	2	6	9	3	18	0	21	0	0	0	0	47
% App. Total	0	29.4	70.6		11.1	22.2	66.7		14.3	85.7	0		0	0	0		
PHF	.000	.417	1.00	.708	.250	.500	.500	.750	.375	.750	.000	.750	.000	.000	.000	.000	.783

Counts Unlimited Inc.
PO Box 1178
Corona, CA 92878
(951) 268-6268

City of Redlands
N/S: Alabama Street
E/W: I-10 Westbound Ramps
Weather: Sunny

File Name : REDAL10WAM
Site Code : 00000044
Start Date : 2/9/2012
Page No : 2

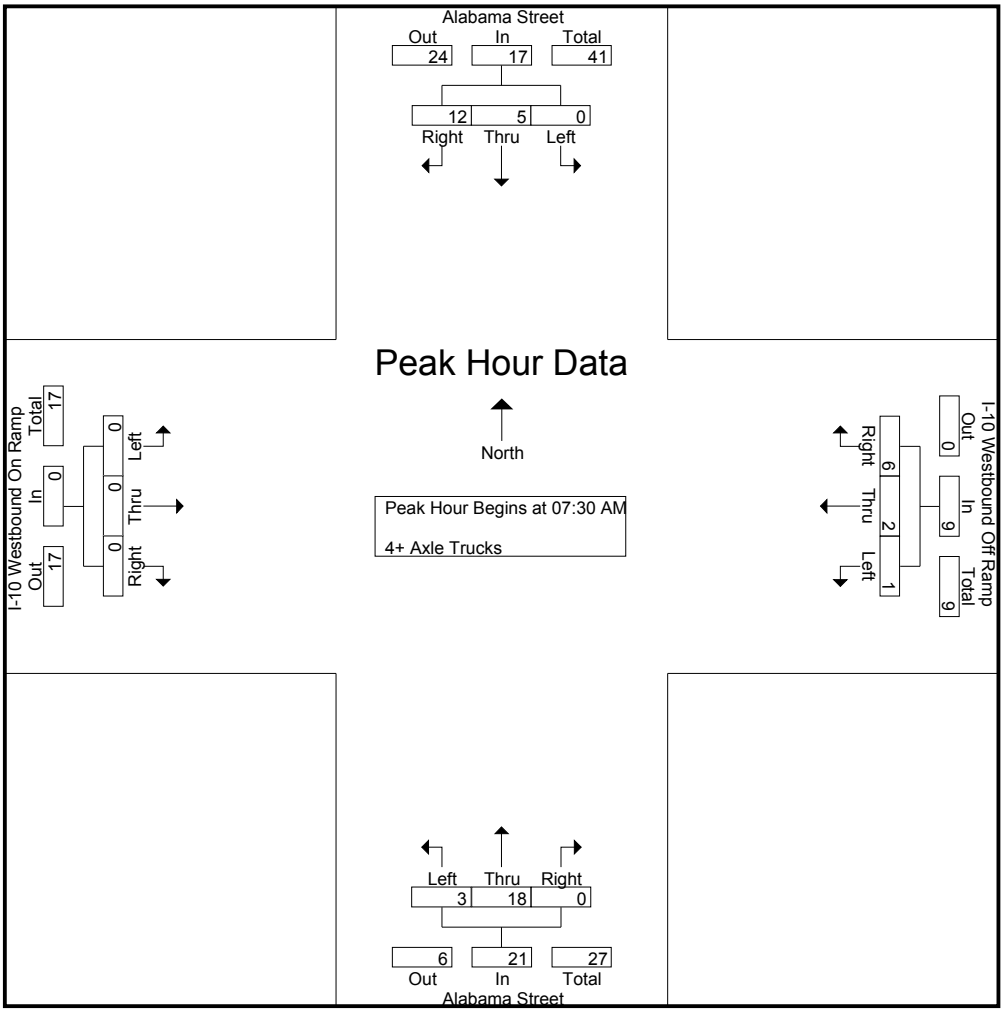

Peak Hour Analysis From 07:30 AM to 08:15 AM - Peak 1 of 1
Peak Hour for Each Approach Begins at:

	07:30 AM				07:30 AM				07:30 AM				07:30 AM			
+0 mins.	0	1	**3**	4	0	**1**	2	**3**	0	3	0	3	0	0	0	0
+15 mins.	0	1	3	4	0	1	0	1	0	5	0	5	0	0	0	0
+30 mins.	0	0	3	3	**1**	0	1	2	1	**6**	0	**7**	0	0	0	0
+45 mins.	0	**3**	3	**6**	0	0	**3**	3	**2**	4	0	6	0	0	0	0
Total Volume	0	5	12	17	1	2	6	9	3	18	0	21	0	0	0	0
% App. Total	0	29.4	70.6		11.1	22.2	66.7		14.3	85.7	0		0	0	0	
PHF	.000	.417	1.000	.708	.250	.500	.500	.750	.375	.750	.000	.750	.000	.000	.000	.000

Counts Unlimited Inc.
PO Box 1178
Corona, CA 92878
(951) 268-6268

City of Redlands
N/S: Alabama Street
E/W: I-10 Westbound Ramps
Weather: Sunny

File Name : REDAL10WPM
Site Code : 00000044
Start Date : 2/9/2012
Page No : 1

Groups Printed- Passenger Vehicles - Large 2 Axle Vehicles - 3 Axle Vehicles - 4+ Axle Trucks

	Alabama Street Southbound				I-10 Westbound Off Ramp Westbound				Alabama Street Northbound				I-10 Westbound On Ramp Eastbound				
Start Time	Left	Thru	Right	App. Total	Left	Thru	Right	App. Total	Left	Thru	Right	App. Total	Left	Thru	Right	App. Total	Int. Total
04:00 PM	0	129	53	182	48	83	30	161	86	229	0	315	0	0	0	0	658
04:15 PM	0	148	109	257	47	77	32	156	104	248	0	352	0	0	0	0	765
04:30 PM	0	134	78	212	30	73	43	146	101	232	0	333	0	0	0	0	691
04:45 PM	0	175	61	236	43	73	50	166	86	274	0	360	0	0	0	0	762
Total	0	586	301	887	168	306	155	629	377	983	0	1360	0	0	0	0	2876
05:00 PM	0	189	83	272	42	88	43	173	95	266	0	361	0	0	0	0	806
05:15 PM	0	205	58	263	37	77	28	142	92	272	0	364	0	0	0	0	769
05:30 PM	0	190	82	272	42	72	35	149	95	274	0	369	0	0	0	0	790
05:45 PM	0	174	81	255	28	63	32	123	97	255	0	352	0	0	0	0	730
Total	0	758	304	1062	149	300	138	587	379	1067	0	1446	0	0	0	0	3095
Grand Total	0	1344	605	1949	317	606	293	1216	756	2050	0	2806	0	0	0	0	5971
Apprch %	0	69	31		26.1	49.8	24.1		26.9	73.1	0		0	0	0		
Total %	0	22.5	10.1	32.6	5.3	10.1	4.9	20.4	12.7	34.3	0	47	0	0	0	0	
Passenger Vehicles	0	1336	580	1916	311	600	287	1198	735	2020	0	2755	0	0	0	0	5869
% Passenger Vehicles	0	99.4	95.9	98.3	98.1	99	98	98.5	97.2	98.5	0	98.2	0	0	0	0	98.3
Large 2 Axle Vehicles	0	5	5	10	3	4	0	7	11	4	0	15	0	0	0	0	32
% Large 2 Axle Vehicles	0	0.4	0.8	0.5	0.9	0.7	0	0.6	1.5	0.2	0	0.5	0	0	0	0	0.5
3 Axle Vehicles	0	0	3	3	2	0	0	2	4	14	0	18	0	0	0	0	23
% 3 Axle Vehicles	0	0	0.5	0.2	0.6	0	0	0.2	0.5	0.7	0	0.6	0	0	0	0	0.4
4+ Axle Trucks	0	3	17	20	1	2	6	9	6	12	0	18	0	0	0	0	47
% 4+ Axle Trucks	0	0.2	2.8	1	0.3	0.3	2	0.7	0.8	0.6	0	0.6	0	0	0	0	0.8

	Alabama Street Southbound				I-10 Westbound Off Ramp Westbound				Alabama Street Northbound				I-10 Westbound On Ramp Eastbound				
Start Time	Left	Thru	Right	App. Total	Left	Thru	Right	App. Total	Left	Thru	Right	App. Total	Left	Thru	Right	App. Total	Int. Total
Peak Hour Analysis From 04:00 PM to 05:45 PM - Peak 1 of 1																	
Peak Hour for Entire Intersection Begins at 04:45 PM																	
04:45 PM	0	175	61	236	**43**	73	**50**	166	86	**274**	0	360	0	0	0	0	762
05:00 PM	0	189	**83**	**272**	42	**88**	43	**173**	**95**	266	0	361	0	0	0	0	**806**
05:15 PM	0	**205**	58	263	37	77	28	142	92	272	0	364	0	0	0	0	769
05:30 PM	0	190	82	272	42	72	35	149	95	274	0	**369**	0	0	0	0	790
Total Volume	0	759	284	1043	164	310	156	630	368	1086	0	1454	0	0	0	0	3127
% App. Total	0	72.8	27.2		26	49.2	24.8		25.3	74.7	0		0	0	0		
PHF	.000	.926	.855	.959	.953	.881	.780	.910	.968	.991	.000	.985	.000	.000	.000	.000	.970

Counts Unlimited Inc.
PO Box 1178
Corona, CA 92878
(951) 268-6268

City of Redlands
N/S: Alabama Street
E/W: I-10 Westbound Ramps
Weather: Sunny

File Name : REDAL10WPM
Site Code : 00000044
Start Date : 2/9/2012
Page No : 2

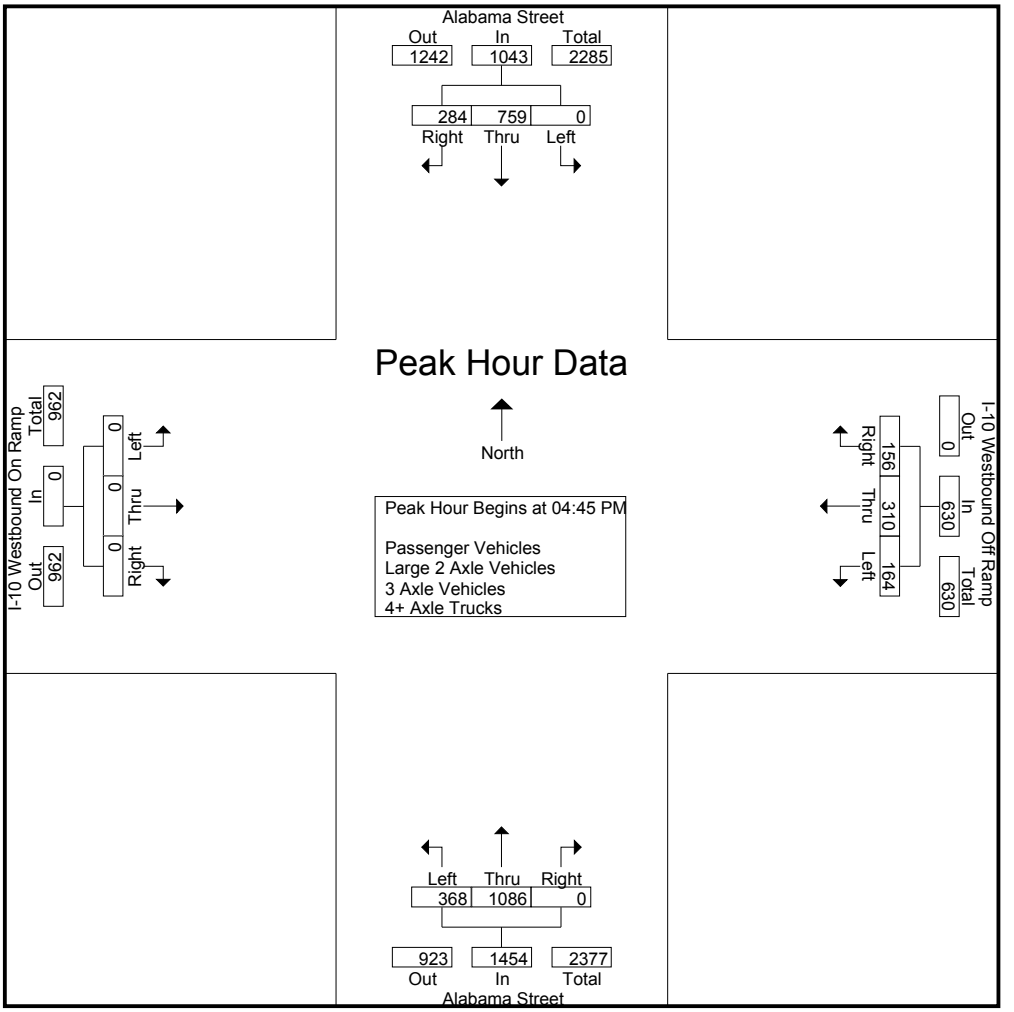

Peak Hour Analysis From 04:00 PM to 05:45 PM - Peak 1 of 1
Peak Hour for Each Approach Begins at:

	05:00 PM				04:15 PM				04:45 PM				04:00 PM			
+0 mins.	0	189	**83**	**272**	**47**	77	32	156	86	**274**	0	360	0	0	0	0
+15 mins.	0	**205**	58	263	30	73	43	146	**95**	266	0	361	0	0	0	0
+30 mins.	0	190	82	272	43	73	**50**	166	92	272	0	364	0	0	0	0
+45 mins.	0	174	81	255	42	**88**	43	**173**	95	274	0	**369**	0	0	0	0
Total Volume	0	758	304	1062	162	311	168	641	368	1086	0	1454	0	0	0	0
% App. Total	0	71.4	28.6		25.3	48.5	26.2		25.3	74.7	0		0	0	0	
PHF	.000	.924	.916	.976	.862	.884	.840	.926	.968	.991	.000	.985	.000	.000	.000	.000

Counts Unlimited Inc.
PO Box 1178
Corona, CA 92878
(951) 268-6268

City of Redlands
N/S: Alabama Street
E/W: I-10 Westbound Ramps
Weather: Sunny

File Name : REDAL10WPM
Site Code : 00000044
Start Date : 2/9/2012
Page No : 1

Groups Printed- Passenger Vehicles

	Alabama Street Southbound				I-10 Westbound Off Ramp Westbound				Alabama Street Northbound				I-10 Westbound On Ramp Eastbound				
Start Time	Left	Thru	Right	App. Total	Left	Thru	Right	App. Total	Left	Thru	Right	App. Total	Left	Thru	Right	App. Total	Int. Total
04:00 PM	0	129	51	180	48	82	30	160	82	224	0	306	0	0	0	0	646
04:15 PM	0	148	106	254	45	77	31	153	97	243	0	340	0	0	0	0	747
04:30 PM	0	131	78	209	26	73	43	142	98	230	0	328	0	0	0	0	679
04:45 PM	0	173	57	230	43	72	46	161	82	267	0	349	0	0	0	0	740
Total	0	581	292	873	162	304	150	616	359	964	0	1323	0	0	0	0	2812
05:00 PM	0	187	79	266	42	85	43	170	92	264	0	356	0	0	0	0	792
05:15 PM	0	204	57	261	37	77	28	142	92	268	0	360	0	0	0	0	763
05:30 PM	0	190	76	266	42	71	34	147	95	273	0	368	0	0	0	0	781
05:45 PM	0	174	76	250	28	63	32	123	97	251	0	348	0	0	0	0	721
Total	0	755	288	1043	149	296	137	582	376	1056	0	1432	0	0	0	0	3057
Grand Total	0	1336	580	1916	311	600	287	1198	735	2020	0	2755	0	0	0	0	5869
Apprch %	0	69.7	30.3		26	50.1	24		26.7	73.3	0		0	0	0		
Total %	0	22.8	9.9	32.6	5.3	10.2	4.9	20.4	12.5	34.4	0	46.9	0	0	0	0	

	Alabama Street Southbound				I-10 Westbound Off Ramp Westbound				Alabama Street Northbound				I-10 Westbound On Ramp Eastbound				
Start Time	Left	Thru	Right	App. Total	Left	Thru	Right	App. Total	Left	Thru	Right	App. Total	Left	Thru	Right	App. Total	Int. Total
Peak Hour Analysis From 04:45 PM to 05:30 PM - Peak 1 of 1																	
Peak Hour for Entire Intersection Begins at 04:45 PM																	
04:45 PM	0	173	57	230	**43**	72	**46**	161	82	267	0	349	0	0	0	0	740
05:00 PM	0	187	**79**	**266**	42	**85**	43	**170**	92	264	0	356	0	0	0	0	**792**
05:15 PM	0	**204**	57	261	37	77	28	142	92	268	0	360	0	0	0	0	763
05:30 PM	0	190	76	266	42	71	34	147	**95**	**273**	0	**368**	0	0	0	0	781
Total Volume	0	754	269	1023	164	305	151	620	361	1072	0	1433	0	0	0	0	3076
% App. Total	0	73.7	26.3		26.5	49.2	24.4		25.2	74.8	0		0	0	0		
PHF	.000	.924	.851	.961	.953	.897	.821	.912	.950	.982	.000	.974	.000	.000	.000	.000	.971

Counts Unlimited Inc.
PO Box 1178
Corona, CA 92878
(951) 268-6268

City of Redlands
N/S: Alabama Street
E/W: I-10 Westbound Ramps
Weather: Sunny

File Name : REDAL10WPM
Site Code : 00000044
Start Date : 2/9/2012
Page No : 2

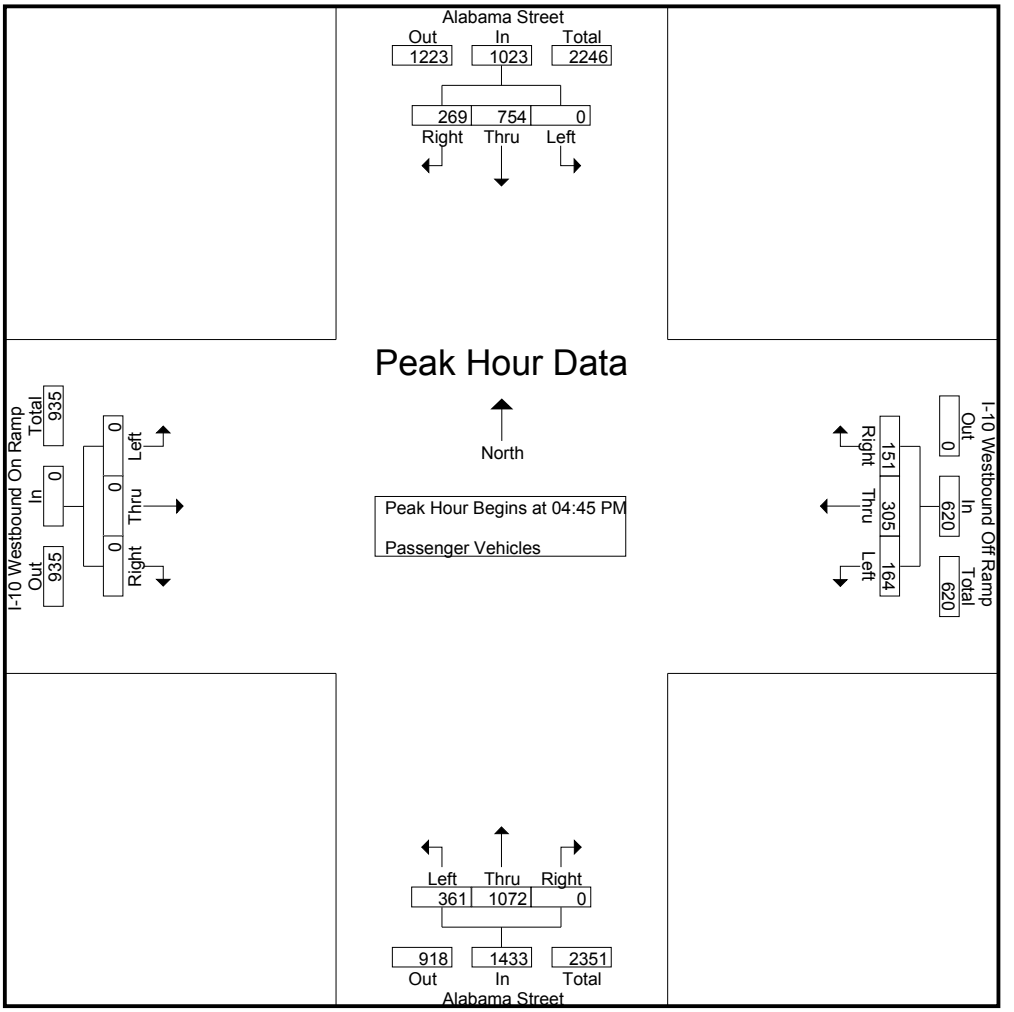

Peak Hour Analysis From 04:45 PM to 05:30 PM - Peak 1 of 1
Peak Hour for Each Approach Begins at:

	04:45 PM				04:45 PM				04:45 PM				04:45 PM			
+0 mins.	0	173	57	230	**43**	72	**46**	161	82	267	0	349	0	0	0	0
+15 mins.	0	187	**79**	**266**	42	**85**	43	**170**	92	264	0	356	0	0	0	0
+30 mins.	0	**204**	57	261	37	77	28	142	92	268	0	360	0	0	0	0
+45 mins.	0	190	76	266	42	71	34	147	**95**	**273**	0	**368**	0	0	0	0
Total Volume	0	754	269	1023	164	305	151	620	361	1072	0	1433	0	0	0	0
% App. Total	0	73.7	26.3		26.5	49.2	24.4		25.2	74.8	0		0	0	0	
PHF	.000	.924	.851	.961	.953	.897	.821	.912	.950	.982	.000	.974	.000	.000	.000	.000

Counts Unlimited Inc.
PO Box 1178
Corona, CA 92878
(951) 268-6268

City of Redlands
N/S: Alabama Street
E/W: I-10 Westbound Ramps
Weather: Sunny

File Name : REDAL10WPM
Site Code : 00000044
Start Date : 2/9/2012
Page No : 1

Groups Printed- Large 2 Axle Vehicles

	Alabama Street Southbound				I-10 Westbound Off Ramp Westbound				Alabama Street Northbound				I-10 Westbound On Ramp Eastbound				
Start Time	Left	Thru	Right	App. Total	Left	Thru	Right	App. Total	Left	Thru	Right	App. Total	Left	Thru	Right	App. Total	Int. Total
04:00 PM	0	0	0	0	0	1	0	1	4	2	0	6	0	0	0	0	7
04:15 PM	0	0	1	1	2	0	0	2	3	0	0	3	0	0	0	0	6
04:30 PM	0	2	0	2	1	0	0	1	0	0	0	0	0	0	0	0	3
04:45 PM	0	1	1	2	0	0	0	0	2	1	0	3	0	0	0	0	5
Total	0	3	2	5	3	1	0	4	9	3	0	12	0	0	0	0	21
05:00 PM	0	1	2	3	0	3	0	3	2	0	0	2	0	0	0	0	8
05:15 PM	0	1	0	1	0	0	0	0	0	0	0	0	0	0	0	0	1
05:30 PM	0	0	0	0	0	0	0	0	0	1	0	1	0	0	0	0	1
05:45 PM	0	0	1	1	0	0	0	0	0	0	0	0	0	0	0	0	1
Total	0	2	3	5	0	3	0	3	2	1	0	3	0	0	0	0	11
Grand Total	0	5	5	10	3	4	0	7	11	4	0	15	0	0	0	0	32
Apprch %	0	50	50		42.9	57.1	0		73.3	26.7	0		0	0	0		
Total %	0	15.6	15.6	31.2	9.4	12.5	0	21.9	34.4	12.5	0	46.9	0	0	0	0	

	Alabama Street Southbound				I-10 Westbound Off Ramp Westbound				Alabama Street Northbound				I-10 Westbound On Ramp Eastbound				
Start Time	Left	Thru	Right	App. Total	Left	Thru	Right	App. Total	Left	Thru	Right	App. Total	Left	Thru	Right	App. Total	Int. Total
Peak Hour Analysis From 04:45 PM to 05:30 PM - Peak 1 of 1																	
Peak Hour for Entire Intersection Begins at 04:45 PM																	
04:45 PM	0	**1**	1	2	0	0	0	0	**2**	**1**	0	**3**	0	0	0	0	5
05:00 PM	0	1	**2**	**3**	0	**3**	0	**3**	2	0	0	2	0	0	0	0	**8**
05:15 PM	0	1	0	1	0	0	0	0	0	0	0	0	0	0	0	0	1
05:30 PM	0	0	0	0	0	0	0	0	0	1	0	1	0	0	0	0	1
Total Volume	0	3	3	6	0	3	0	3	4	2	0	6	0	0	0	0	15
% App. Total	0	50	50		0	100	0		66.7	33.3	0		0	0	0		
PHF	.000	.750	.375	.500	.000	.250	.000	.250	.500	.500	.000	.500	.000	.000	.000	.000	.469

Counts Unlimited Inc.
PO Box 1178
Corona, CA 92878
(951) 268-6268

City of Redlands
N/S: Alabama Street
E/W: I-10 Westbound Ramps
Weather: Sunny

File Name : REDAL10WPM
Site Code : 00000044
Start Date : 2/9/2012
Page No : 2

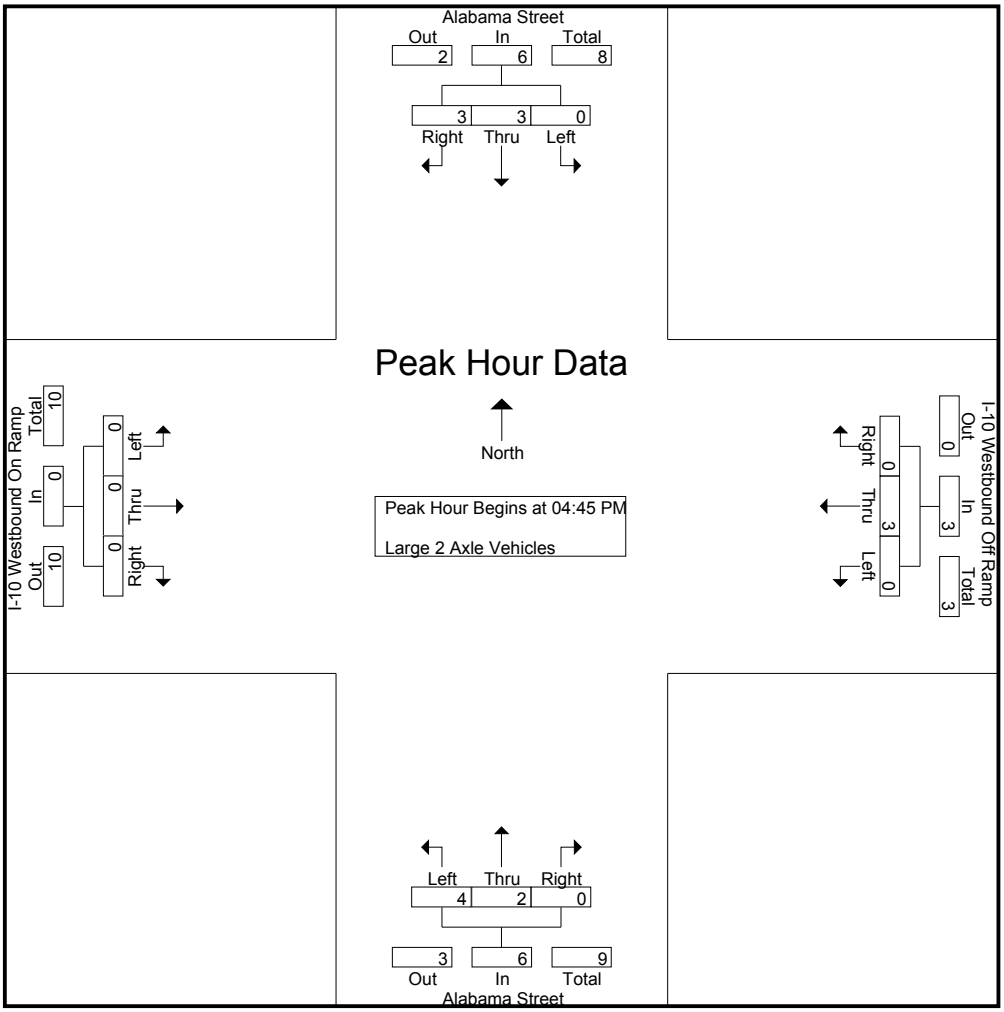

Peak Hour Analysis From 04:45 PM to 05:30 PM - Peak 1 of 1
Peak Hour for Each Approach Begins at:

	04:45 PM				04:45 PM				04:45 PM				04:45 PM			
+0 mins.	0	**1**	1	2	0	0	0	0	**2**	**1**	0	**3**	0	0	0	0
+15 mins.	0	1	**2**	**3**	0	**3**	0	**3**	2	0	0	2	0	0	0	0
+30 mins.	0	1	0	1	0	0	0	0	0	0	0	0	0	0	0	0
+45 mins.	0	0	0	0	0	0	0	0	0	1	0	1	0	0	0	0
Total Volume	0	3	3	6	0	3	0	3	4	2	0	6	0	0	0	0
% App. Total	0	50	50		0	100	0		66.7	33.3	0		0	0	0	
PHF	.000	.750	.375	.500	.000	.250	.000	.250	.500	.500	.000	.500	.000	.000	.000	.000

Counts Unlimited Inc.
PO Box 1178
Corona, CA 92878
(951) 268-6268

City of Redlands
N/S: Alabama Street
E/W: I-10 Westbound Ramps
Weather: Sunny

File Name : REDAL10WPM
Site Code : 00000044
Start Date : 2/9/2012
Page No : 1

Groups Printed- 3 Axle Vehicles

	Alabama Street Southbound				I-10 Westbound Off Ramp Westbound				Alabama Street Northbound				I-10 Westbound On Ramp Eastbound				
Start Time	Left	Thru	Right	App. Total	Left	Thru	Right	App. Total	Left	Thru	Right	App. Total	Left	Thru	Right	App. Total	Int. Total
04:00 PM	0	0	0	0	0	0	0	0	0	3	0	3	0	0	0	0	3
04:15 PM	0	0	0	0	0	0	0	0	2	2	0	4	0	0	0	0	4
04:30 PM	0	0	0	0	2	0	0	2	2	1	0	3	0	0	0	0	5
04:45 PM	0	0	2	2	0	0	0	0	0	3	0	3	0	0	0	0	5
Total	0	0	2	2	2	0	0	2	4	9	0	13	0	0	0	0	17
05:00 PM	0	0	0	0	0	0	0	0	0	1	0	1	0	0	0	0	1
05:15 PM	0	0	1	1	0	0	0	0	0	2	0	2	0	0	0	0	3
05:30 PM	0	0	0	0	0	0	0	0	0	0	0	0	0	0	0	0	0
05:45 PM	0	0	0	0	0	0	0	0	0	2	0	2	0	0	0	0	2
Total	0	0	1	1	0	0	0	0	0	5	0	5	0	0	0	0	6
Grand Total	0	0	3	3	2	0	0	2	4	14	0	18	0	0	0	0	23
Apprch %	0	0	100		100	0	0		22.2	77.8	0		0	0	0		
Total %	0	0	13	13	8.7	0	0	8.7	17.4	60.9	0	78.3	0	0	0	0	

	Alabama Street Southbound				I-10 Westbound Off Ramp Westbound				Alabama Street Northbound				I-10 Westbound On Ramp Eastbound				
Start Time	Left	Thru	Right	App. Total	Left	Thru	Right	App. Total	Left	Thru	Right	App. Total	Left	Thru	Right	App. Total	Int. Total
Peak Hour Analysis From 04:45 PM to 05:30 PM - Peak 1 of 1																	
Peak Hour for Entire Intersection Begins at 04:45 PM																	
04:45 PM	0	0	**2**	**2**	0	0	0	0	0	**3**	0	**3**	0	0	0	0	**5**
05:00 PM	0	0	0	0	0	0	0	0	0	1	0	1	0	0	0	0	1
05:15 PM	0	0	1	1	0	0	0	0	0	2	0	2	0	0	0	0	3
05:30 PM	0	0	0	0	0	0	0	0	0	0	0	0	0	0	0	0	0
Total Volume	0	0	3	3	0	0	0	0	0	6	0	6	0	0	0	0	9
% App. Total	0	0	100		0	0	0		0	100	0		0	0	0		
PHF	.000	.000	.375	.375	.000	.000	.000	.000	.000	.500	.000	.500	.000	.000	.000	.000	.450

Counts Unlimited Inc.
PO Box 1178
Corona, CA 92878
(951) 268-6268

City of Redlands
N/S: Alabama Street
E/W: I-10 Westbound Ramps
Weather: Sunny

File Name : REDAL10WPM
Site Code : 00000044
Start Date : 2/9/2012
Page No : 2

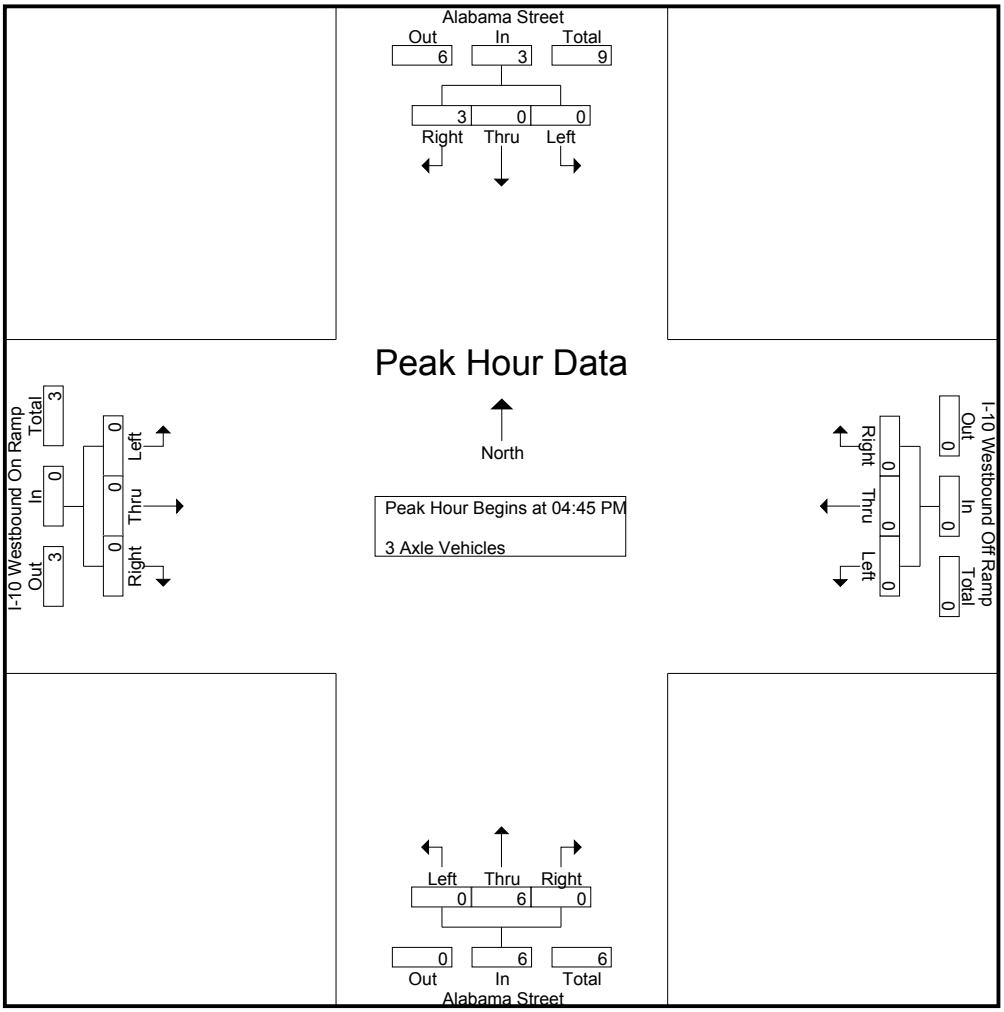

Peak Hour Analysis From 04:45 PM to 05:30 PM - Peak 1 of 1
Peak Hour for Each Approach Begins at:

	04:45 PM				04:45 PM				04:45 PM				04:45 PM			
+0 mins.	0	0	**2**	**2**	0	0	0	0	0	**3**	0	**3**	0	0	0	0
+15 mins.	0	0	0	0	0	0	0	0	0	1	0	1	0	0	0	0
+30 mins.	0	0	1	1	0	0	0	0	0	2	0	2	0	0	0	0
+45 mins.	0	0	0	0	0	0	0	0	0	0	0	0	0	0	0	0
Total Volume	0	0	3	3	0	0	0	0	0	6	0	6	0	0	0	0
% App. Total	0	0	100		0	0	0		0	100	0		0	0	0	
PHF	.000	.000	.375	.375	.000	.000	.000	.000	.000	.500	.000	.500	.000	.000	.000	.000

Counts Unlimited Inc.
PO Box 1178
Corona, CA 92878
(951) 268-6268

City of Redlands
N/S: Alabama Street
E/W: I-10 Westbound Ramps
Weather: Sunny

File Name : REDAL10WPM
Site Code : 00000044
Start Date : 2/9/2012
Page No : 1

Groups Printed- 4+ Axle Trucks

	Alabama Street Southbound				I-10 Westbound Off Ramp Westbound				Alabama Street Northbound				I-10 Westbound On Ramp Eastbound				
Start Time	Left	Thru	Right	App. Total	Left	Thru	Right	App. Total	Left	Thru	Right	App. Total	Left	Thru	Right	App. Total	Int. Total
04:00 PM	0	0	2	2	0	0	0	0	0	0	0	0	0	0	0	0	2
04:15 PM	0	0	2	2	0	0	1	1	2	3	0	5	0	0	0	0	8
04:30 PM	0	1	0	1	1	0	0	1	1	1	0	2	0	0	0	0	4
04:45 PM	0	1	1	2	0	1	4	5	2	3	0	5	0	0	0	0	12
Total	0	2	5	7	1	1	5	7	5	7	0	12	0	0	0	0	26
05:00 PM	0	1	2	3	0	0	0	0	1	1	0	2	0	0	0	0	5
05:15 PM	0	0	0	0	0	0	0	0	0	2	0	2	0	0	0	0	2
05:30 PM	0	0	6	6	0	1	1	2	0	0	0	0	0	0	0	0	8
05:45 PM	0	0	4	4	0	0	0	0	0	2	0	2	0	0	0	0	6
Total	0	1	12	13	0	1	1	2	1	5	0	6	0	0	0	0	21
Grand Total	0	3	17	20	1	2	6	9	6	12	0	18	0	0	0	0	47
Apprch %	0	15	85		11.1	22.2	66.7		33.3	66.7	0		0	0	0		
Total %	0	6.4	36.2	42.6	2.1	4.3	12.8	19.1	12.8	25.5	0	38.3	0	0	0	0	

	Alabama Street Southbound				I-10 Westbound Off Ramp Westbound				Alabama Street Northbound				I-10 Westbound On Ramp Eastbound				
Start Time	Left	Thru	Right	App. Total	Left	Thru	Right	App. Total	Left	Thru	Right	App. Total	Left	Thru	Right	App. Total	Int. Total
Peak Hour Analysis From 04:45 PM to 05:30 PM - Peak 1 of 1																	
Peak Hour for Entire Intersection Begins at 04:45 PM																	
04:45 PM	0	**1**	1	2	0	**1**	**4**	**5**	**2**	**3**	0	**5**	0	0	0	0	**12**
05:00 PM	0	1	2	3	0	0	0	0	1	1	0	2	0	0	0	0	5
05:15 PM	0	0	0	0	0	0	0	0	0	2	0	2	0	0	0	0	2
05:30 PM	0	0	**6**	**6**	0	1	1	2	0	0	0	0	0	0	0	0	8
Total Volume	0	2	9	11	0	2	5	7	3	6	0	9	0	0	0	0	27
% App. Total	0	18.2	81.8		0	28.6	71.4		33.3	66.7	0		0	0	0		
PHF	.000	.500	.375	.458	.000	.500	.313	.350	.375	.500	.000	.450	.000	.000	.000	.000	.563

Counts Unlimited Inc.
PO Box 1178
Corona, CA 92878
(951) 268-6268

City of Redlands
N/S: Alabama Street
E/W: I-10 Westbound Ramps
Weather: Sunny

File Name : REDAL10WPM
Site Code : 00000044
Start Date : 2/9/2012
Page No : 2

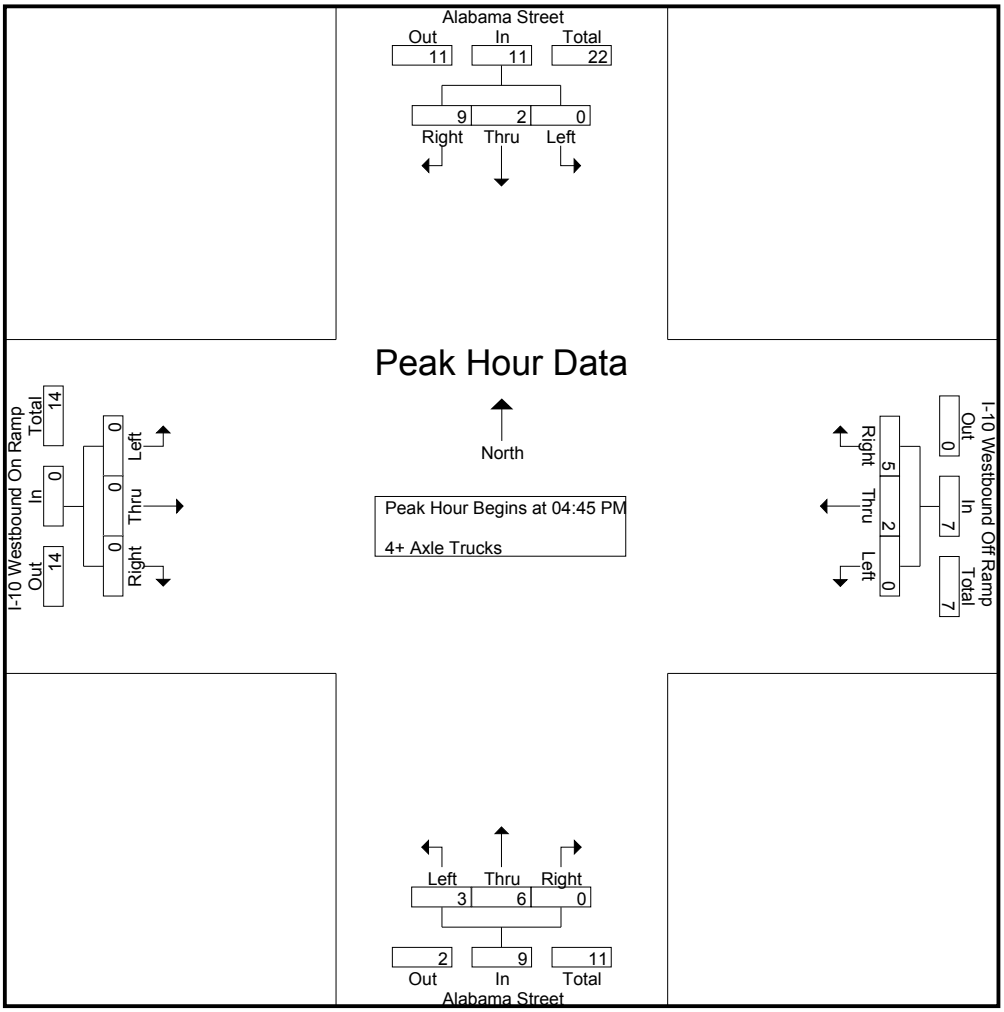

Peak Hour Analysis From 04:45 PM to 05:30 PM - Peak 1 of 1
Peak Hour for Each Approach Begins at:

	04:45 PM				04:45 PM				04:45 PM				04:45 PM			
+0 mins.	0	**1**	1	2	0	**1**	**4**	**5**	**2**	**3**	0	**5**	0	0	0	0
+15 mins.	0	1	2	3	0	0	0	0	1	1	0	2	0	0	0	0
+30 mins.	0	0	0	0	0	0	0	0	0	2	0	2	0	0	0	0
+45 mins.	0	0	**6**	**6**	0	1	1	2	0	0	0	0	0	0	0	0
Total Volume	0	2	9	11	0	2	5	7	3	6	0	9	0	0	0	0
% App. Total	0	18.2	81.8		0	28.6	71.4		33.3	66.7	0		0	0	0	
PHF	.000	.500	.375	.458	.000	.500	.313	.350	.375	.500	.000	.450	.000	.000	.000	.000

Counts Unlimited Inc.
PO Box 1178
Corona, CA 92878
(951) 268-6268

City of Redlands
N/S: Alabama Street
E/W: I-10 Eastbound Ramps
Weather: Sunny

File Name : REDAL10EAM
Site Code : 00000017
Start Date : 2/9/2012
Page No : 1

Groups Printed- Passenger Vehicles - Large 2 Axle Vehicles - 3 Axle Vehicles - 4+ Axle Trucks

	Alabama Street Southbound				I-10 Eastbound On Ramp Westbound				Alabama Street Northbound				I-10 Eastbound Off Ramp Eastbound				
Start Time	Left	Thru	Right	App. Total	Left	Thru	Right	App. Total	Left	Thru	Right	App. Total	Left	Thru	Right	App. Total	Int. Total
07:00 AM	7	83	0	90	0	0	0	0	0	121	9	130	31	0	62	93	313
07:15 AM	15	99	0	114	0	0	0	0	0	128	12	140	33	1	82	116	370
07:30 AM	9	117	0	126	0	0	0	0	0	142	30	172	42	1	91	134	432
07:45 AM	7	149	0	156	0	0	0	0	0	145	18	163	46	0	101	147	466
Total	38	448	0	486	0	0	0	0	0	536	69	605	152	2	336	490	1581
08:00 AM	14	138	0	152	0	0	0	0	0	140	37	177	39	0	81	120	449
08:15 AM	13	104	0	117	0	0	0	0	0	128	29	157	54	0	78	132	406
08:30 AM	17	118	0	135	0	0	0	0	0	112	25	137	39	0	69	108	380
08:45 AM	16	151	0	167	0	0	0	0	0	118	26	144	56	0	109	165	476
Total	60	511	0	571	0	0	0	0	0	498	117	615	188	0	337	525	1711
Grand Total	98	959	0	1057	0	0	0	0	0	1034	186	1220	340	2	673	1015	3292
Apprch %	9.3	90.7	0		0	0	0		0	84.8	15.2		33.5	0.2	66.3		
Total %	3	29.1	0	32.1	0	0	0	0	0	31.4	5.7	37.1	10.3	0.1	20.4	30.8	
Passenger Vehicles	92	932	0	1024	0	0	0	0	0	987	174	1161	306	2	637	945	3130
% Passenger Vehicles	93.9	97.2	0	96.9	0	0	0	0	0	95.5	93.5	95.2	90	100	94.7	93.1	95.1
Large 2 Axle Vehicles	5	15	0	20	0	0	0	0	0	24	8	32	6	0	16	22	74
% Large 2 Axle Vehicles	5.1	1.6	0	1.9	0	0	0	0	0	2.3	4.3	2.6	1.8	0	2.4	2.2	2.2
3 Axle Vehicles	0	4	0	4	0	0	0	0	0	5	1	6	7	0	4	11	21
% 3 Axle Vehicles	0	0.4	0	0.4	0	0	0	0	0	0.5	0.5	0.5	2.1	0	0.6	1.1	0.6
4+ Axle Trucks	1	8	0	9	0	0	0	0	0	18	3	21	21	0	16	37	67
% 4+ Axle Trucks	1	0.8	0	0.9	0	0	0	0	0	1.7	1.6	1.7	6.2	0	2.4	3.6	2

	Alabama Street Southbound				I-10 Eastbound On Ramp Westbound				Alabama Street Northbound				I-10 Eastbound Off Ramp Eastbound				
Start Time	Left	Thru	Right	App. Total	Left	Thru	Right	App. Total	Left	Thru	Right	App. Total	Left	Thru	Right	App. Total	Int. Total
Peak Hour Analysis From 07:00 AM to 08:45 AM - Peak 1 of 1																	
Peak Hour for Entire Intersection Begins at 07:30 AM																	
07:30 AM	9	117	0	126	0	0	0	0	0	142	30	172	42	**1**	91	134	432
07:45 AM	7	**149**	0	**156**	0	0	0	0	0	**145**	18	163	46	0	**101**	**147**	**466**
08:00 AM	**14**	138	0	152	0	0	0	0	0	140	**37**	**177**	39	0	81	120	449
08:15 AM	13	104	0	117	0	0	0	0	0	128	29	157	**54**	0	78	132	406
Total Volume	43	508	0	551	0	0	0	0	0	555	114	669	181	1	351	533	1753
% App. Total	7.8	92.2	0		0	0	0		0	83	17		34	0.2	65.9		
PHF	.768	.852	.000	.883	.000	.000	.000	.000	.000	.957	.770	.945	.838	.250	.869	.906	.940

Counts Unlimited Inc.
PO Box 1178
Corona, CA 92878
(951) 268-6268

City of Redlands
N/S: Alabama Street
E/W: I-10 Eastbound Ramps
Weather: Sunny

File Name : REDAL10EAM
Site Code : 00000017
Start Date : 2/9/2012
Page No : 2

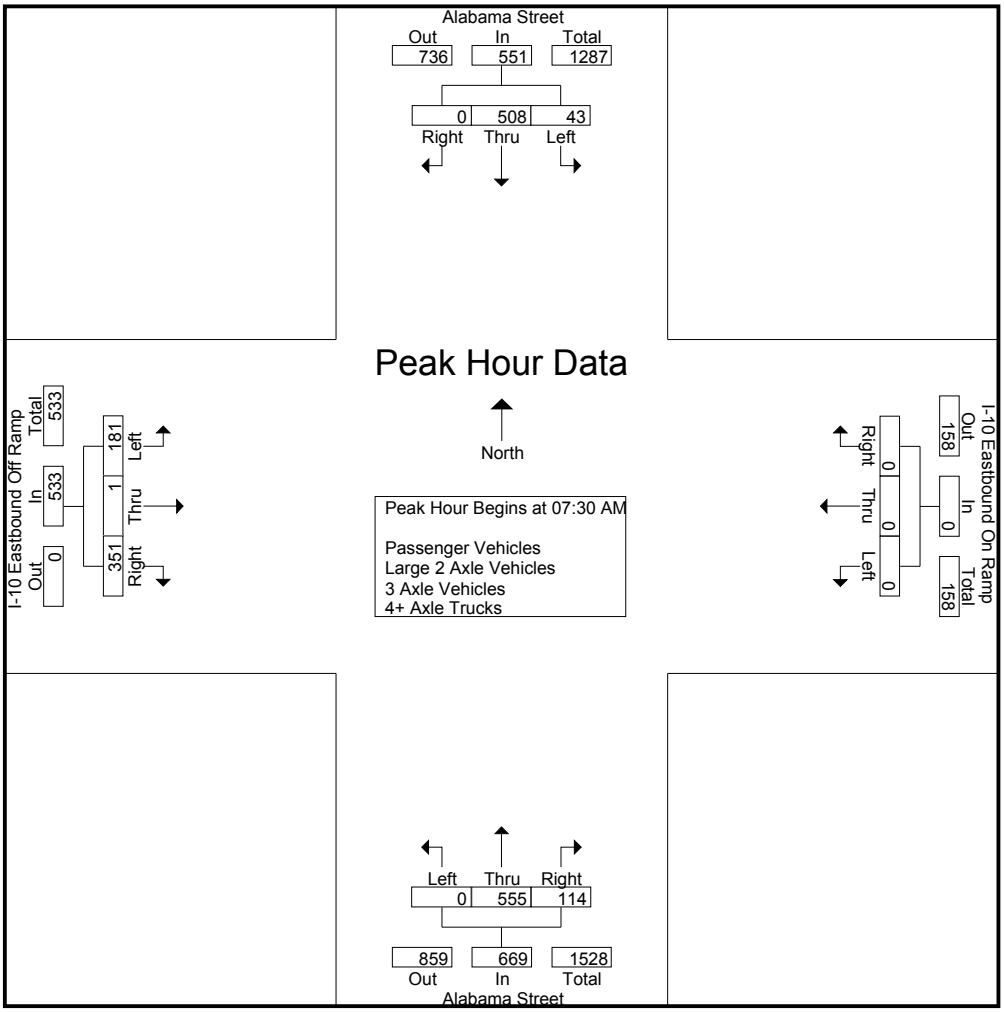

Peak Hour Analysis From 07:00 AM to 08:45 AM - Peak 1 of 1
Peak Hour for Each Approach Begins at:

	08:00 AM				07:00 AM				07:30 AM				07:30 AM			
+0 mins.	14	138	0	152	0	0	0	0	0	142	30	172	42	**1**	91	134
+15 mins.	13	104	0	117	0	0	0	0	0	**145**	18	163	46	0	**101**	**147**
+30 mins.	**17**	118	0	135	0	0	0	0	0	140	**37**	**177**	39	0	81	120
+45 mins.	16	**151**	0	**167**	0	0	0	0	0	128	29	157	**54**	0	78	132
Total Volume	60	511	0	571	0	0	0	0	0	555	114	669	181	1	351	533
% App. Total	10.5	89.5	0		0	0	0		0	83	17		34	0.2	65.9	
PHF	.882	.846	.000	.855	.000	.000	.000	.000	.000	.957	.770	.945	.838	.250	.869	.906

Counts Unlimited Inc.
PO Box 1178
Corona, CA 92878
(951) 268-6268

City of Redlands
N/S: Alabama Street
E/W: I-10 Eastbound Ramps
Weather: Sunny

File Name : REDAL10EAM
Site Code : 00000017
Start Date : 2/9/2012
Page No : 1

Groups Printed- Passenger Vehicles

	Alabama Street Southbound				I-10 Eastbound On Ramp Westbound				Alabama Street Northbound				I-10 Eastbound Off Ramp Eastbound				
Start Time	Left	Thru	Right	App. Total	Left	Thru	Right	App. Total	Left	Thru	Right	App. Total	Left	Thru	Right	App. Total	Int. Total
07:00 AM	6	81	0	87	0	0	0	0	0	118	9	127	28	0	62	90	304
07:15 AM	13	93	0	106	0	0	0	0	0	124	10	134	30	1	73	104	344
07:30 AM	9	115	0	124	0	0	0	0	0	134	26	160	40	1	87	128	412
07:45 AM	7	145	0	152	0	0	0	0	0	139	17	156	39	0	96	135	443
Total	35	434	0	469	0	0	0	0	0	515	62	577	137	2	318	457	1503
08:00 AM	14	137	0	151	0	0	0	0	0	132	36	168	34	0	74	108	427
08:15 AM	11	100	0	111	0	0	0	0	0	122	27	149	47	0	74	121	381
08:30 AM	16	115	0	131	0	0	0	0	0	107	23	130	38	0	68	106	367
08:45 AM	16	146	0	162	0	0	0	0	0	111	26	137	50	0	103	153	452
Total	57	498	0	555	0	0	0	0	0	472	112	584	169	0	319	488	1627
Grand Total	92	932	0	1024	0	0	0	0	0	987	174	1161	306	2	637	945	3130
Apprch %	9	91	0		0	0	0		0	85	15		32.4	0.2	67.4		
Total %	2.9	29.8	0	32.7	0	0	0	0	0	31.5	5.6	37.1	9.8	0.1	20.4	30.2	

	Alabama Street Southbound				I-10 Eastbound On Ramp Westbound				Alabama Street Northbound				I-10 Eastbound Off Ramp Eastbound				
Start Time	Left	Thru	Right	App. Total	Left	Thru	Right	App. Total	Left	Thru	Right	App. Total	Left	Thru	Right	App. Total	Int. Total
Peak Hour Analysis From 07:30 AM to 08:15 AM - Peak 1 of 1																	
Peak Hour for Entire Intersection Begins at 07:30 AM																	
07:30 AM	9	115	0	124	0	0	0	0	0	134	26	160	40	**1**	87	128	412
07:45 AM	7	**145**	0	**152**	0	0	0	0	0	**139**	17	156	39	0	**96**	**135**	**443**
08:00 AM	**14**	137	0	151	0	0	0	0	0	132	**36**	**168**	34	0	74	108	427
08:15 AM	11	100	0	111	0	0	0	0	0	122	27	149	**47**	0	74	121	381
Total Volume	41	497	0	538	0	0	0	0	0	527	106	633	160	1	331	492	1663
% App. Total	7.6	92.4	0		0	0	0		0	83.3	16.7		32.5	0.2	67.3		
PHF	.732	.857	.000	.885	.000	.000	.000	.000	.000	.948	.736	.942	.851	.250	.862	.911	.938

Counts Unlimited Inc.
PO Box 1178
Corona, CA 92878
(951) 268-6268

City of Redlands
N/S: Alabama Street
E/W: I-10 Eastbound Ramps
Weather: Sunny

File Name : REDAL10EAM
Site Code : 00000017
Start Date : 2/9/2012
Page No : 2

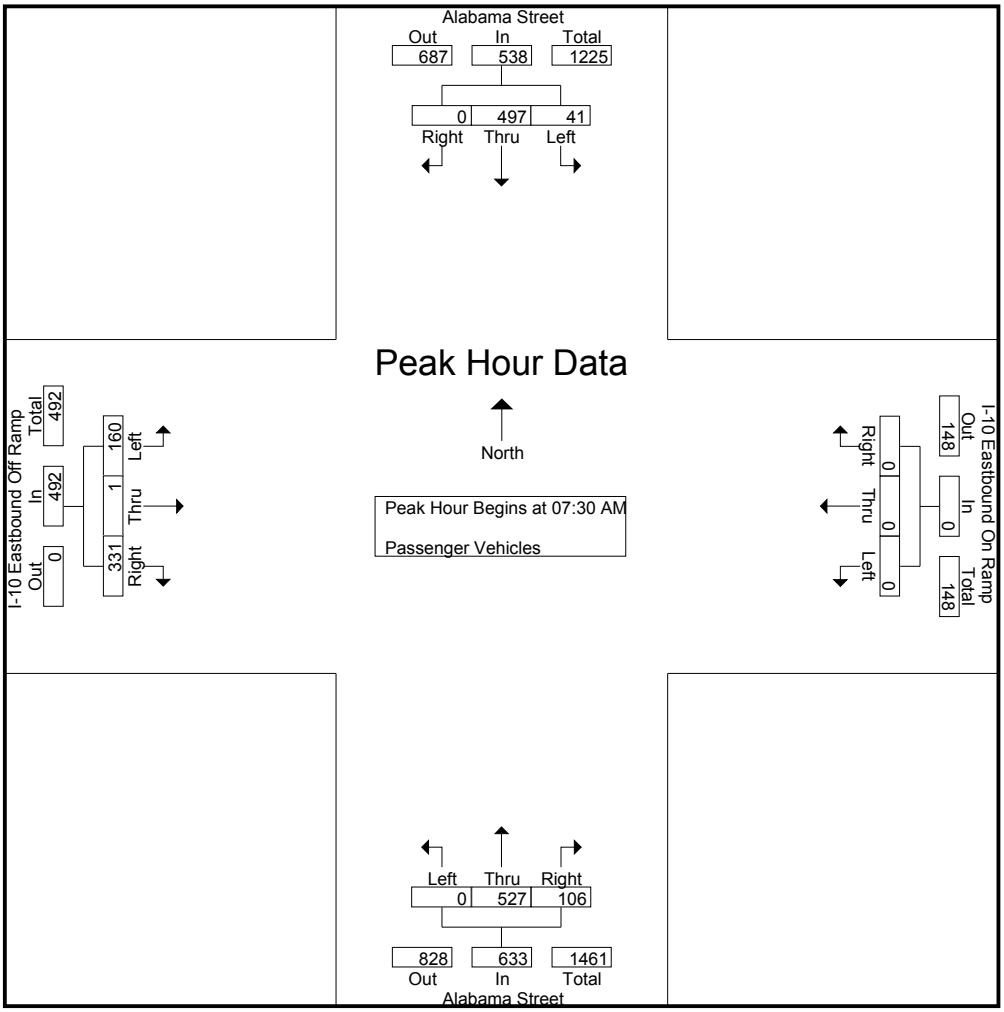

Peak Hour Analysis From 07:30 AM to 08:15 AM - Peak 1 of 1
Peak Hour for Each Approach Begins at:

	07:30 AM				07:30 AM				07:30 AM				07:30 AM			
+0 mins.	9	115	0	124	0	0	0	0	0	134	26	160	40	**1**	87	128
+15 mins.	7	**145**	0	**152**	0	0	0	0	0	**139**	17	156	39	0	**96**	**135**
+30 mins.	**14**	137	0	151	0	0	0	0	0	132	**36**	**168**	34	0	74	108
+45 mins.	11	100	0	111	0	0	0	0	0	122	27	149	**47**	0	74	121
Total Volume	41	497	0	538	0	0	0	0	0	527	106	633	160	1	331	492
% App. Total	7.6	92.4	0		0	0	0		0	83.3	16.7		32.5	0.2	67.3	
PHF	.732	.857	.000	.885	.000	.000	.000	.000	.000	.948	.736	.942	.851	.250	.862	.911

Counts Unlimited Inc.
PO Box 1178
Corona, CA 92878
(951) 268-6268

City of Redlands
N/S: Alabama Street
E/W: I-10 Eastbound Ramps
Weather: Sunny

File Name : REDAL10EAM
Site Code : 00000017
Start Date : 2/9/2012
Page No : 1

Groups Printed- Large 2 Axle Vehicles

	Alabama Street Southbound				I-10 Eastbound On Ramp Westbound				Alabama Street Northbound				I-10 Eastbound Off Ramp Eastbound				
Start Time	Left	Thru	Right	App. Total	Left	Thru	Right	App. Total	Left	Thru	Right	App. Total	Left	Thru	Right	App. Total	Int. Total
07:00 AM	0	2	0	2	0	0	0	0	0	0	0	0	0	0	0	0	2
07:15 AM	2	5	0	7	0	0	0	0	0	3	1	4	0	0	1	1	12
07:30 AM	0	0	0	0	0	0	0	0	0	4	3	7	0	0	1	1	8
07:45 AM	0	2	0	2	0	0	0	0	0	5	0	5	2	0	2	4	11
Total	2	9	0	11	0	0	0	0	0	12	4	16	2	0	4	6	33
08:00 AM	0	0	0	0	0	0	0	0	0	3	1	4	1	0	5	6	10
08:15 AM	2	1	0	3	0	0	0	0	0	4	1	5	2	0	3	5	13
08:30 AM	1	2	0	3	0	0	0	0	0	2	2	4	0	0	1	1	8
08:45 AM	0	3	0	3	0	0	0	0	0	3	0	3	1	0	3	4	10
Total	3	6	0	9	0	0	0	0	0	12	4	16	4	0	12	16	41
Grand Total	5	15	0	20	0	0	0	0	0	24	8	32	6	0	16	22	74
Apprch %	25	75	0		0	0	0		0	75	25		27.3	0	72.7		
Total %	6.8	20.3	0	27	0	0	0	0	0	32.4	10.8	43.2	8.1	0	21.6	29.7	

	Alabama Street Southbound				I-10 Eastbound On Ramp Westbound				Alabama Street Northbound				I-10 Eastbound Off Ramp Eastbound				
Start Time	Left	Thru	Right	App. Total	Left	Thru	Right	App. Total	Left	Thru	Right	App. Total	Left	Thru	Right	App. Total	Int. Total
Peak Hour Analysis From 07:30 AM to 08:15 AM - Peak 1 of 1																	
Peak Hour for Entire Intersection Begins at 07:30 AM																	
07:30 AM	0	0	0	0	0	0	0	0	0	4	**3**	**7**	0	0	1	1	8
07:45 AM	0	**2**	0	2	0	0	0	0	0	**5**	0	5	**2**	0	2	4	11
08:00 AM	0	0	0	0	0	0	0	0	0	3	1	4	1	0	**5**	**6**	10
08:15 AM	**2**	1	0	**3**	0	0	0	0	0	4	1	5	2	0	3	5	**13**
Total Volume	2	3	0	5	0	0	0	0	0	16	5	21	5	0	11	16	42
% App. Total	40	60	0		0	0	0		0	76.2	23.8		31.2	0	68.8		
PHF	.250	.375	.000	.417	.000	.000	.000	.000	.000	.800	.417	.750	.625	.000	.550	.667	.808

Counts Unlimited Inc.
PO Box 1178
Corona, CA 92878
(951) 268-6268

City of Redlands
N/S: Alabama Street
E/W: I-10 Eastbound Ramps
Weather: Sunny

File Name : REDAL10EAM
Site Code : 00000017
Start Date : 2/9/2012
Page No : 2

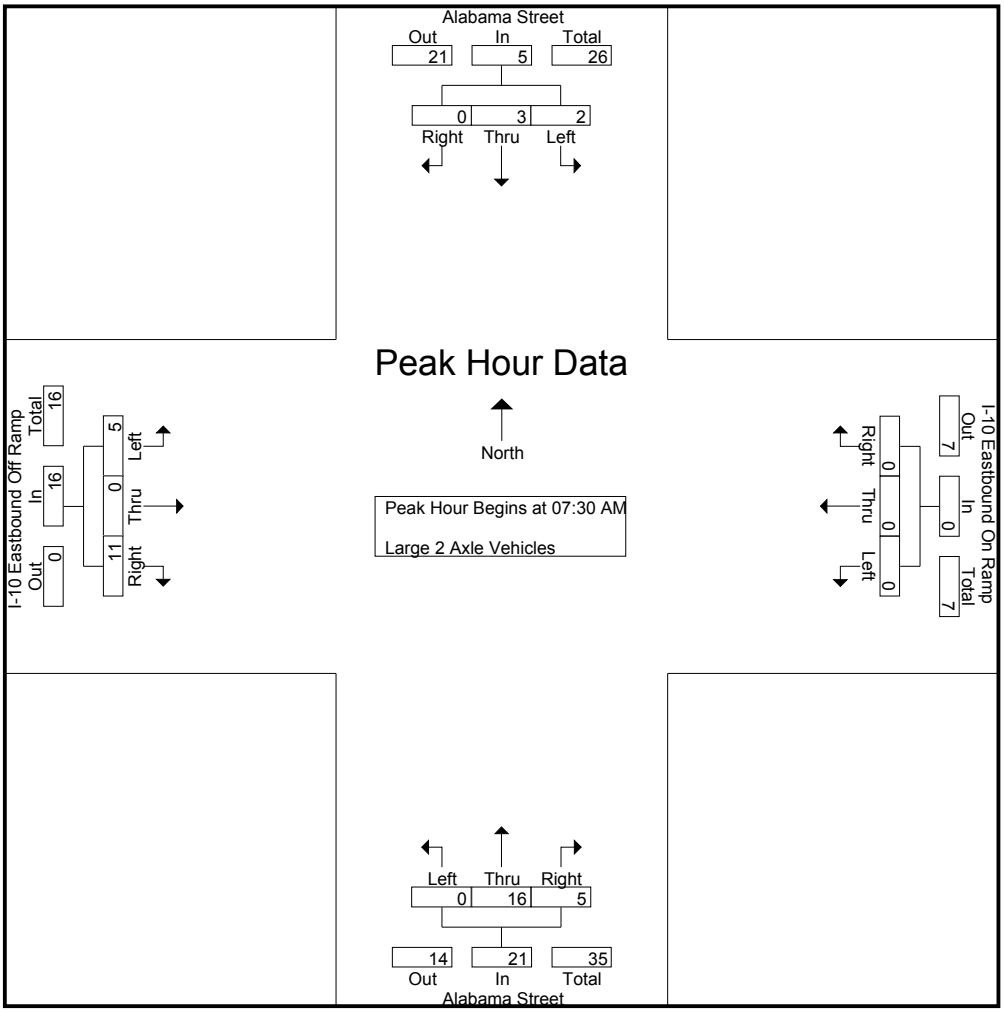

Peak Hour Analysis From 07:30 AM to 08:15 AM - Peak 1 of 1
Peak Hour for Each Approach Begins at:

	07:30 AM				07:30 AM				07:30 AM				07:30 AM			
+0 mins.	0	0	0	0	0	0	0	0	0	4	**3**	**7**	0	0	1	1
+15 mins.	0	**2**	0	2	0	0	0	0	0	**5**	0	5	**2**	0	2	4
+30 mins.	0	0	0	0	0	0	0	0	0	3	1	4	1	0	**5**	**6**
+45 mins.	**2**	1	0	**3**	0	0	0	0	0	4	1	5	2	0	3	5
Total Volume	2	3	0	5	0	0	0	0	0	16	5	21	5	0	11	16
% App. Total	40	60	0		0	0	0		0	76.2	23.8		31.2	0	68.8	
PHF	.250	.375	.000	.417	.000	.000	.000	.000	.000	.800	.417	.750	.625	.000	.550	.667

Counts Unlimited Inc.
PO Box 1178
Corona, CA 92878
(951) 268-6268

City of Redlands
N/S: Alabama Street
E/W: I-10 Eastbound Ramps
Weather: Sunny

File Name : REDAL10EAM
Site Code : 00000017
Start Date : 2/9/2012
Page No : 1

Groups Printed- 3 Axle Vehicles

	Alabama Street Southbound				I-10 Eastbound On Ramp Westbound				Alabama Street Northbound				I-10 Eastbound Off Ramp Eastbound				
Start Time	Left	Thru	Right	App. Total	Left	Thru	Right	App. Total	Left	Thru	Right	App. Total	Left	Thru	Right	App. Total	Int. Total
07:00 AM	0	0	0	0	0	0	0	0	0	1	0	1	1	0	0	1	2
07:15 AM	0	0	0	0	0	0	0	0	0	0	1	1	1	0	2	3	4
07:30 AM	0	2	0	2	0	0	0	0	0	2	0	2	1	0	0	1	5
07:45 AM	0	1	0	1	0	0	0	0	0	0	0	0	1	0	1	2	3
Total	0	3	0	3	0	0	0	0	0	3	1	4	4	0	3	7	14
08:00 AM	0	0	0	0	0	0	0	0	0	1	0	1	1	0	1	2	3
08:15 AM	0	1	0	1	0	0	0	0	0	0	0	0	1	0	0	1	2
08:30 AM	0	0	0	0	0	0	0	0	0	0	0	0	0	0	0	0	0
08:45 AM	0	0	0	0	0	0	0	0	0	1	0	1	1	0	0	1	2
Total	0	1	0	1	0	0	0	0	0	2	0	2	3	0	1	4	7
Grand Total	0	4	0	4	0	0	0	0	0	5	1	6	7	0	4	11	21
Apprch %	0	100	0		0	0	0		0	83.3	16.7		63.6	0	36.4		
Total %	0	19	0	19	0	0	0	0	0	23.8	4.8	28.6	33.3	0	19	52.4	

	Alabama Street Southbound				I-10 Eastbound On Ramp Westbound				Alabama Street Northbound				I-10 Eastbound Off Ramp Eastbound				
Start Time	Left	Thru	Right	App. Total	Left	Thru	Right	App. Total	Left	Thru	Right	App. Total	Left	Thru	Right	App. Total	Int. Total
Peak Hour Analysis From 07:30 AM to 08:15 AM - Peak 1 of 1																	
Peak Hour for Entire Intersection Begins at 07:30 AM																	
07:30 AM	0	**2**	0	**2**	0	0	0	0	0	**2**	0	**2**	**1**	0	0	1	**5**
07:45 AM	0	1	0	1	0	0	0	0	0	0	0	0	1	0	**1**	**2**	3
08:00 AM	0	0	0	0	0	0	0	0	0	1	0	1	1	0	1	2	3
08:15 AM	0	1	0	1	0	0	0	0	0	0	0	0	1	0	0	1	2
Total Volume	0	4	0	4	0	0	0	0	0	3	0	3	4	0	2	6	13
% App. Total	0	100	0		0	0	0		0	100	0		66.7	0	33.3		
PHF	.000	.500	.000	.500	.000	.000	.000	.000	.000	.375	.000	.375	1.00	.000	.500	.750	.650

Counts Unlimited Inc.
PO Box 1178
Corona, CA 92878
(951) 268-6268

City of Redlands
N/S: Alabama Street
E/W: I-10 Eastbound Ramps
Weather: Sunny

File Name : REDAL10EAM
Site Code : 00000017
Start Date : 2/9/2012
Page No : 2

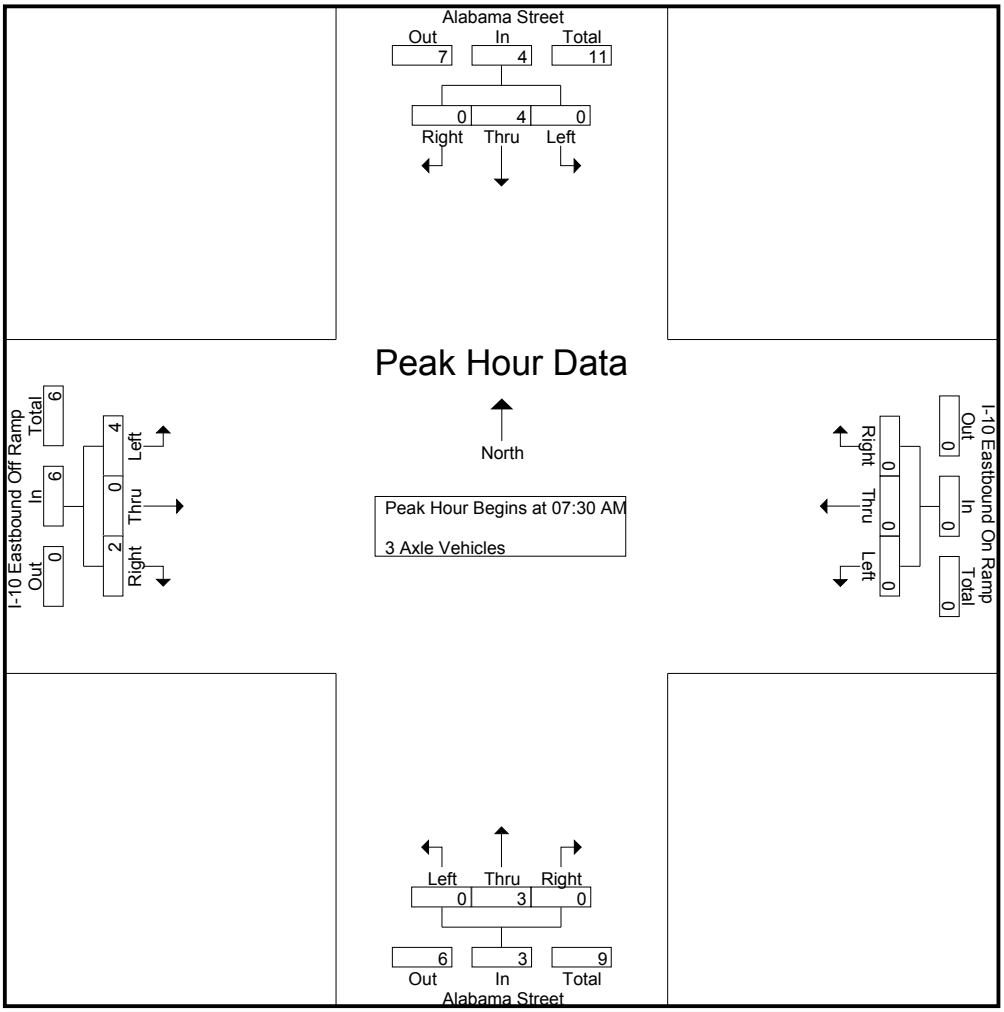

Peak Hour Analysis From 07:30 AM to 08:15 AM - Peak 1 of 1
Peak Hour for Each Approach Begins at:

	07:30 AM				07:30 AM				07:30 AM				07:30 AM			
+0 mins.	0	**2**	0	**2**	0	0	0	0	0	**2**	0	**2**	**1**	0	0	1
+15 mins.	0	1	0	1	0	0	0	0	0	0	0	0	1	0	**1**	**2**
+30 mins.	0	0	0	0	0	0	0	0	0	1	0	1	1	0	1	2
+45 mins.	0	1	0	1	0	0	0	0	0	0	0	0	1	0	0	1
Total Volume	0	4	0	4	0	0	0	0	0	3	0	3	4	0	2	6
% App. Total	0	100	0		0	0	0		0	100	0		66.7	0	33.3	
PHF	.000	.500	.000	.500	.000	.000	.000	.000	.000	.375	.000	.375	1.000	.000	.500	.750

Counts Unlimited Inc.
PO Box 1178
Corona, CA 92878
(951) 268-6268

City of Redlands
N/S: Alabama Street
E/W: I-10 Eastbound Ramps
Weather: Sunny

File Name : REDAL10EAM
Site Code : 00000017
Start Date : 2/9/2012
Page No : 1

Groups Printed- 4+ Axle Trucks

	Alabama Street Southbound				I-10 Eastbound On Ramp Westbound				Alabama Street Northbound				I-10 Eastbound Off Ramp Eastbound				
Start Time	Left	Thru	Right	App. Total	Left	Thru	Right	App. Total	Left	Thru	Right	App. Total	Left	Thru	Right	App. Total	Int. Total
07:00 AM	1	0	0	1	0	0	0	0	0	2	0	2	2	0	0	2	5
07:15 AM	0	1	0	1	0	0	0	0	0	1	0	1	2	0	6	8	10
07:30 AM	0	0	0	0	0	0	0	0	0	2	1	3	1	0	3	4	7
07:45 AM	0	1	0	1	0	0	0	0	0	1	1	2	4	0	2	6	9
Total	1	2	0	3	0	0	0	0	0	6	2	8	9	0	11	20	31
08:00 AM	0	1	0	1	0	0	0	0	0	4	0	4	3	0	1	4	9
08:15 AM	0	2	0	2	0	0	0	0	0	2	1	3	4	0	1	5	10
08:30 AM	0	1	0	1	0	0	0	0	0	3	0	3	1	0	0	1	5
08:45 AM	0	2	0	2	0	0	0	0	0	3	0	3	4	0	3	7	12
Total	0	6	0	6	0	0	0	0	0	12	1	13	12	0	5	17	36
Grand Total	1	8	0	9	0	0	0	0	0	18	3	21	21	0	16	37	67
Apprch %	11.1	88.9	0		0	0	0		0	85.7	14.3		56.8	0	43.2		
Total %	1.5	11.9	0	13.4	0	0	0	0	0	26.9	4.5	31.3	31.3	0	23.9	55.2	

	Alabama Street Southbound				I-10 Eastbound On Ramp Westbound				Alabama Street Northbound				I-10 Eastbound Off Ramp Eastbound				
Start Time	Left	Thru	Right	App. Total	Left	Thru	Right	App. Total	Left	Thru	Right	App. Total	Left	Thru	Right	App. Total	Int. Total
Peak Hour Analysis From 07:30 AM to 08:15 AM - Peak 1 of 1																	
Peak Hour for Entire Intersection Begins at 07:30 AM																	
07:30 AM	0	0	0	0	0	0	0	0	0	2	**1**	3	1	0	**3**	4	7
07:45 AM	0	1	0	1	0	0	0	0	0	1	1	2	**4**	0	2	**6**	9
08:00 AM	0	1	0	1	0	0	0	0	0	**4**	0	**4**	3	0	1	4	9
08:15 AM	0	**2**	0	**2**	0	0	0	0	0	2	1	3	4	0	1	5	**10**
Total Volume	0	4	0	4	0	0	0	0	0	9	3	12	12	0	7	19	35
% App. Total	0	100	0		0	0	0		0	75	25		63.2	0	36.8		
PHF	.000	.500	.000	.500	.000	.000	.000	.000	.000	.563	.750	.750	.750	.000	.583	.792	.875

Counts Unlimited Inc.
PO Box 1178
Corona, CA 92878
(951) 268-6268

City of Redlands
N/S: Alabama Street
E/W: I-10 Eastbound Ramps
Weather: Sunny

File Name : REDAL10EAM
Site Code : 00000017
Start Date : 2/9/2012
Page No : 2

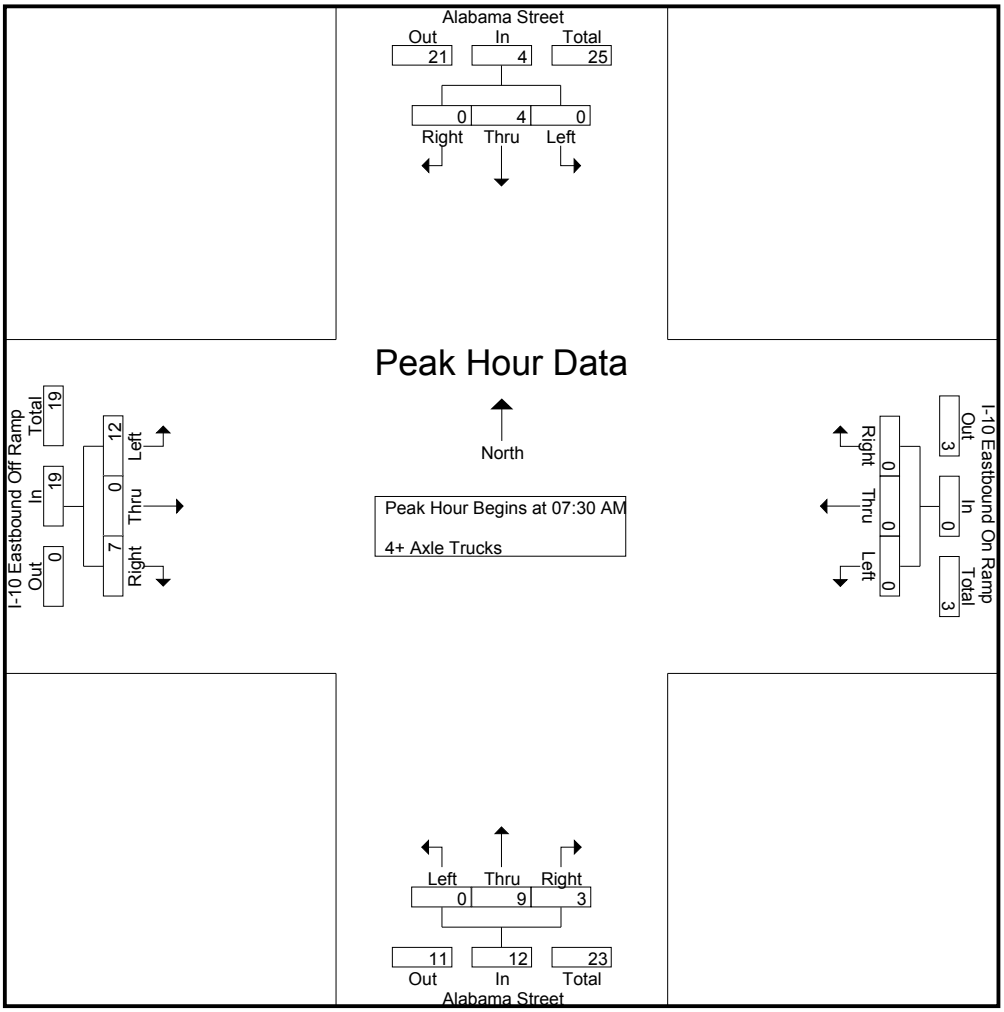

Peak Hour Analysis From 07:30 AM to 08:15 AM - Peak 1 of 1
Peak Hour for Each Approach Begins at:

	07:30 AM				07:30 AM				07:30 AM				07:30 AM			
+0 mins.	0	0	0	0	0	0	0	0	0	2	**1**	3	1	0	**3**	4
+15 mins.	0	1	0	1	0	0	0	0	0	1	1	2	**4**	0	2	**6**
+30 mins.	0	1	0	1	0	0	0	0	0	**4**	0	**4**	3	0	1	4
+45 mins.	0	**2**	0	**2**	0	0	0	0	0	2	1	3	4	0	1	5
Total Volume	0	4	0	4	0	0	0	0	0	9	3	12	12	0	7	19
% App. Total	0	100	0		0	0	0		0	75	25		63.2	0	36.8	
PHF	.000	.500	.000	.500	.000	.000	.000	.000	.000	.563	.750	.750	.750	.000	.583	.792

Counts Unlimited Inc.
PO Box 1178
Corona, CA 92878
(951) 268-6268

City of Redlands
N/S: Alabama Street
E/W: I-10 Eastbound Ramps
Weather: Sunny

File Name : REDAL10EPM
Site Code : 00000017
Start Date : 2/9/2012
Page No : 1

Groups Printed- Passenger Vehicles - Large 2 Axle Vehicles - 3 Axle Vehicles - 4+ Axle Trucks

	Alabama Street Southbound				I-10 Eastbound On Ramp Westbound				Alabama Street Northbound				I-10 Eastbound Off Ramp Eastbound				
Start Time	Left	Thru	Right	App. Total	Left	Thru	Right	App. Total	Left	Thru	Right	App. Total	Left	Thru	Right	App. Total	Int. Total
04:00 PM	57	125	0	182	0	0	0	0	0	230	70	300	117	1	98	216	698
04:15 PM	29	166	0	195	0	0	0	0	0	239	58	297	90	1	104	195	687
04:30 PM	31	138	0	169	0	0	0	0	0	255	63	318	101	1	106	208	695
04:45 PM	40	168	0	208	0	0	0	0	0	247	50	297	95	0	92	187	692
Total	157	597	0	754	0	0	0	0	0	971	241	1212	403	3	400	806	2772
05:00 PM	54	155	0	209	0	0	0	0	0	259	61	320	108	2	100	210	739
05:15 PM	60	200	0	260	0	0	0	0	0	236	70	306	87	2	104	193	759
05:30 PM	52	183	0	235	0	0	0	0	0	234	69	303	116	0	100	216	754
05:45 PM	45	172	0	217	0	0	0	0	0	234	69	303	117	0	114	231	751
Total	211	710	0	921	0	0	0	0	0	963	269	1232	428	4	418	850	3003
Grand Total	368	1307	0	1675	0	0	0	0	0	1934	510	2444	831	7	818	1656	5775
Apprch %	22	78	0		0	0	0		0	79.1	20.9		50.2	0.4	49.4		
Total %	6.4	22.6	0	29	0	0	0	0	0	33.5	8.8	42.3	14.4	0.1	14.2	28.7	
Passenger Vehicles	365	1297	0	1662	0	0	0	0	0	1908	506	2414	814	7	806	1627	5703
% Passenger Vehicles	99.2	99.2	0	99.2	0	0	0	0	0	98.7	99.2	98.8	98	100	98.5	98.2	98.8
Large 2 Axle Vehicles	1	4	0	5	0	0	0	0	0	14	2	16	2	0	8	10	31
% Large 2 Axle Vehicles	0.3	0.3	0	0.3	0	0	0	0	0	0.7	0.4	0.7	0.2	0	1	0.6	0.5
3 Axle Vehicles	1	2	0	3	0	0	0	0	0	5	1	6	3	0	1	4	13
% 3 Axle Vehicles	0.3	0.2	0	0.2	0	0	0	0	0	0.3	0.2	0.2	0.4	0	0.1	0.2	0.2
4+ Axle Trucks	1	4	0	5	0	0	0	0	0	7	1	8	12	0	3	15	28
% 4+ Axle Trucks	0.3	0.3	0	0.3	0	0	0	0	0	0.4	0.2	0.3	1.4	0	0.4	0.9	0.5

	Alabama Street Southbound				I-10 Eastbound On Ramp Westbound				Alabama Street Northbound				I-10 Eastbound Off Ramp Eastbound				
Start Time	Left	Thru	Right	App. Total	Left	Thru	Right	App. Total	Left	Thru	Right	App. Total	Left	Thru	Right	App. Total	Int. Total
Peak Hour Analysis From 05:00 PM to 05:45 PM - Peak 1 of 1																	
Peak Hour for Entire Intersection Begins at 05:00 PM																	
05:00 PM	54	155	0	209	0	0	0	0	0	**259**	61	**320**	108	**2**	100	210	739
05:15 PM	**60**	**200**	0	**260**	0	0	0	0	0	236	**70**	306	87	2	104	193	**759**
05:30 PM	52	183	0	235	0	0	0	0	0	234	69	303	116	0	100	216	754
05:45 PM	45	172	0	217	0	0	0	0	0	234	69	303	**117**	0	**114**	**231**	751
Total Volume	211	710	0	921	0	0	0	0	0	963	269	1232	428	4	418	850	3003
% App. Total	22.9	77.1	0		0	0	0		0	78.2	21.8		50.4	0.5	49.2		
PHF	.879	.888	.000	.886	.000	.000	.000	.000	.000	.930	.961	.963	.915	.500	.917	.920	.989

Counts Unlimited Inc.
PO Box 1178
Corona, CA 92878
(951) 268-6268

City of Redlands
N/S: Alabama Street
E/W: I-10 Eastbound Ramps
Weather: Sunny

File Name : REDAL10EPM
Site Code : 00000017
Start Date : 2/9/2012
Page No : 2

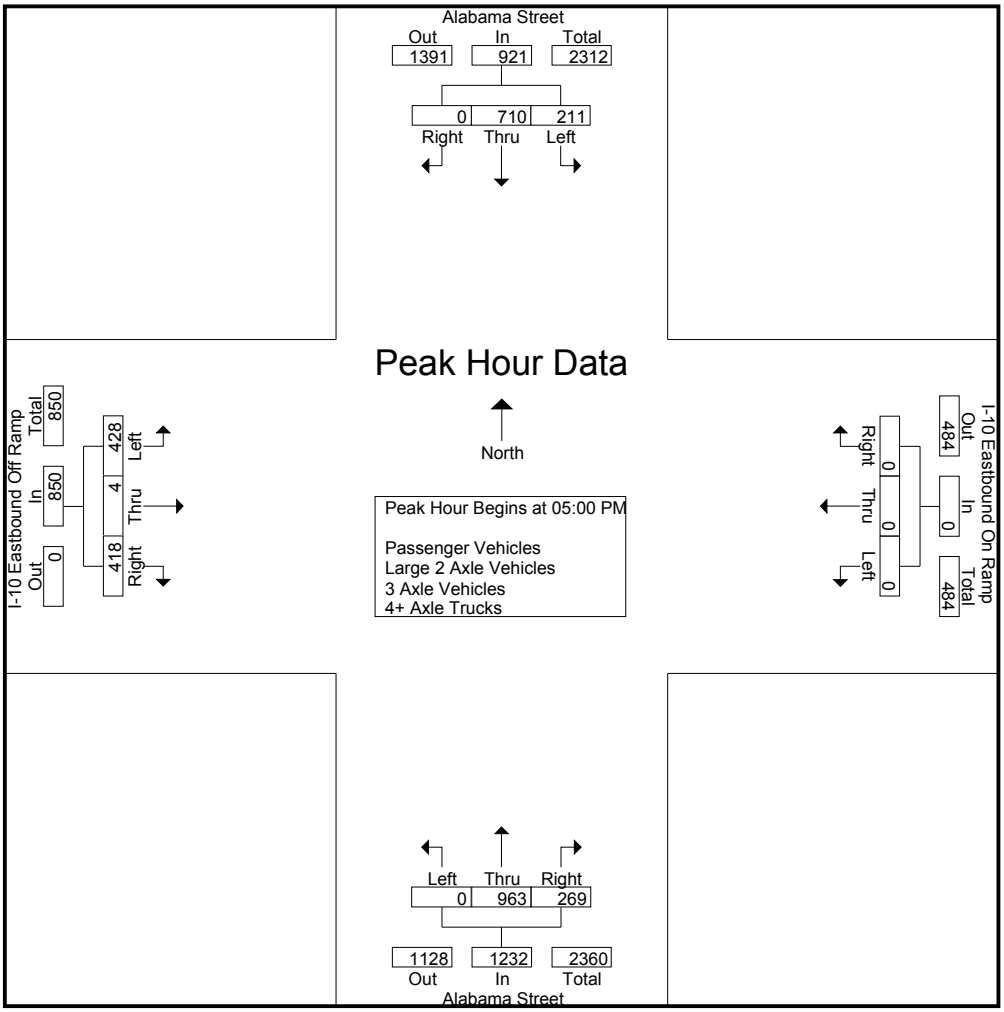

Peak Hour Analysis From 05:00 PM to 05:45 PM - Peak 1 of 1
Peak Hour for Each Approach Begins at:

	05:00 PM				05:00 PM				05:00 PM				05:00 PM			
+0 mins.	54	155	0	209	0	0	0	0	0	**259**	61	**320**	108	**2**	100	210
+15 mins.	**60**	**200**	0	**260**	0	0	0	0	0	236	**70**	306	87	2	104	193
+30 mins.	52	183	0	235	0	0	0	0	0	234	69	303	116	0	100	216
+45 mins.	45	172	0	217	0	0	0	0	0	234	69	303	**117**	0	**114**	**231**
Total Volume	211	710	0	921	0	0	0	0	0	963	269	1232	428	4	418	850
% App. Total	22.9	77.1	0		0	0	0		0	78.2	21.8		50.4	0.5	49.2	
PHF	.879	.888	.000	.886	.000	.000	.000	.000	.000	.930	.961	.963	.915	.500	.917	.920

Counts Unlimited Inc.
PO Box 1178
Corona, CA 92878
(951) 268-6268

City of Redlands
N/S: Alabama Street
E/W: I-10 Eastbound Ramps
Weather: Sunny

File Name : REDAL10EPM
Site Code : 00000017
Start Date : 2/9/2012
Page No : 1

Groups Printed- Passenger Vehicles

	Alabama Street Southbound				I-10 Eastbound On Ramp Westbound				Alabama Street Northbound				I-10 Eastbound Off Ramp Eastbound				
Start Time	Left	Thru	Right	App. Total	Left	Thru	Right	App. Total	Left	Thru	Right	App. Total	Left	Thru	Right	App. Total	Int. Total
04:00 PM	57	125	0	182	0	0	0	0	0	227	69	296	111	1	97	209	687
04:15 PM	29	164	0	193	0	0	0	0	0	235	57	292	87	1	101	189	674
04:30 PM	30	135	0	165	0	0	0	0	0	249	61	310	100	1	106	207	682
04:45 PM	38	165	0	203	0	0	0	0	0	242	50	292	93	0	90	183	678
Total	154	589	0	743	0	0	0	0	0	953	237	1190	391	3	394	788	2721
05:00 PM	54	155	0	209	0	0	0	0	0	256	61	317	107	2	97	206	732
05:15 PM	60	200	0	260	0	0	0	0	0	236	70	306	87	2	104	193	759
05:30 PM	52	181	0	233	0	0	0	0	0	231	69	300	114	0	98	212	745
05:45 PM	45	172	0	217	0	0	0	0	0	232	69	301	115	0	113	228	746
Total	211	708	0	919	0	0	0	0	0	955	269	1224	423	4	412	839	2982
Grand Total	365	1297	0	1662	0	0	0	0	0	1908	506	2414	814	7	806	1627	5703
Apprch %	22	78	0		0	0	0		0	79	21		50	0.4	49.5		
Total %	6.4	22.7	0	29.1	0	0	0	0	0	33.5	8.9	42.3	14.3	0.1	14.1	28.5	

	Alabama Street Southbound				I-10 Eastbound On Ramp Westbound				Alabama Street Northbound				I-10 Eastbound Off Ramp Eastbound				
Start Time	Left	Thru	Right	App. Total	Left	Thru	Right	App. Total	Left	Thru	Right	App. Total	Left	Thru	Right	App. Total	Int. Total
Peak Hour Analysis From 05:00 PM to 05:45 PM - Peak 1 of 1																	
Peak Hour for Entire Intersection Begins at 05:00 PM																	
05:00 PM	54	155	0	209	0	0	0	0	0	**256**	61	**317**	107	**2**	97	206	732
05:15 PM	**60**	**200**	0	**260**	0	0	0	0	0	236	**70**	306	87	2	104	193	**759**
05:30 PM	52	181	0	233	0	0	0	0	0	231	69	300	114	0	98	212	745
05:45 PM	45	172	0	217	0	0	0	0	0	232	69	301	**115**	0	**113**	**228**	746
Total Volume	211	708	0	919	0	0	0	0	0	955	269	1224	423	4	412	839	2982
% App. Total	23	77	0		0	0	0		0	78	22		50.4	0.5	49.1		
PHF	.879	.885	.000	.884	.000	.000	.000	.000	.000	.933	.961	.965	.920	.500	.912	.920	.982

Counts Unlimited Inc.
PO Box 1178
Corona, CA 92878
(951) 268-6268

City of Redlands
N/S: Alabama Street
E/W: I-10 Eastbound Ramps
Weather: Sunny

File Name : REDAL10EPM
Site Code : 00000017
Start Date : 2/9/2012
Page No : 2

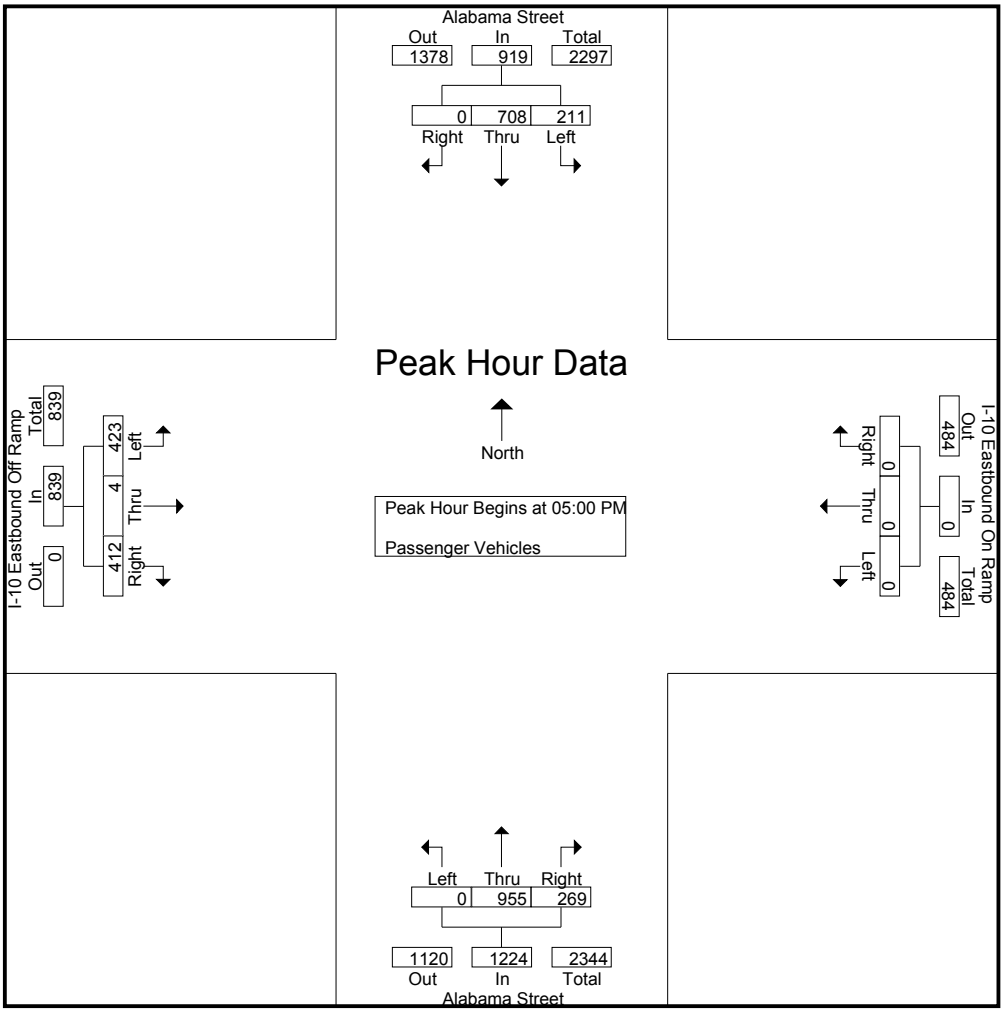

Peak Hour Analysis From 05:00 PM to 05:45 PM - Peak 1 of 1
Peak Hour for Each Approach Begins at:

	05:00 PM				05:00 PM				05:00 PM				05:00 PM			
+0 mins.	54	155	0	209	0	0	0	0	0	**256**	61	**317**	107	**2**	97	206
+15 mins.	**60**	**200**	0	**260**	0	0	0	0	0	236	**70**	306	87	2	104	193
+30 mins.	52	181	0	233	0	0	0	0	0	231	69	300	114	0	98	212
+45 mins.	45	172	0	217	0	0	0	0	0	232	69	301	**115**	0	**113**	**228**
Total Volume	211	708	0	919	0	0	0	0	0	955	269	1224	423	4	412	839
% App. Total	23	77	0		0	0	0		0	78	22		50.4	0.5	49.1	
PHF	.879	.885	.000	.884	.000	.000	.000	.000	.000	.933	.961	.965	.920	.500	.912	.920

Counts Unlimited Inc.
PO Box 1178
Corona, CA 92878
(951) 268-6268

City of Redlands
N/S: Alabama Street
E/W: I-10 Eastbound Ramps
Weather: Sunny

File Name : REDAL10EPM
Site Code : 00000017
Start Date : 2/9/2012
Page No : 1

Groups Printed- Large 2 Axle Vehicles

	Alabama Street Southbound				I-10 Eastbound On Ramp Westbound				Alabama Street Northbound				I-10 Eastbound Off Ramp Eastbound				
Start Time	Left	Thru	Right	App. Total	Left	Thru	Right	App. Total	Left	Thru	Right	App. Total	Left	Thru	Right	App. Total	Int. Total
04:00 PM	0	0	0	0	0	0	0	0	0	2	0	2	1	0	0	1	3
04:15 PM	0	2	0	2	0	0	0	0	0	2	1	3	0	0	1	1	6
04:30 PM	0	0	0	0	0	0	0	0	0	3	1	4	0	0	0	0	4
04:45 PM	1	1	0	2	0	0	0	0	0	2	0	2	0	0	2	2	6
Total	1	3	0	4	0	0	0	0	0	9	2	11	1	0	3	4	19
05:00 PM	0	0	0	0	0	0	0	0	0	2	0	2	1	0	3	4	6
05:15 PM	0	0	0	0	0	0	0	0	0	0	0	0	0	0	0	0	0
05:30 PM	0	1	0	1	0	0	0	0	0	1	0	1	0	0	1	1	3
05:45 PM	0	0	0	0	0	0	0	0	0	2	0	2	0	0	1	1	3
Total	0	1	0	1	0	0	0	0	0	5	0	5	1	0	5	6	12
Grand Total	1	4	0	5	0	0	0	0	0	14	2	16	2	0	8	10	31
Apprch %	20	80	0		0	0	0		0	87.5	12.5		20	0	80		
Total %	3.2	12.9	0	16.1	0	0	0	0	0	45.2	6.5	51.6	6.5	0	25.8	32.3	

	Alabama Street Southbound				I-10 Eastbound On Ramp Westbound				Alabama Street Northbound				I-10 Eastbound Off Ramp Eastbound				
Start Time	Left	Thru	Right	App. Total	Left	Thru	Right	App. Total	Left	Thru	Right	App. Total	Left	Thru	Right	App. Total	Int. Total
Peak Hour Analysis From 05:00 PM to 05:45 PM - Peak 1 of 1																	
Peak Hour for Entire Intersection Begins at 05:00 PM																	
05:00 PM	0	0	0	0	0	0	0	0	0	**2**	0	**2**	**1**	0	**3**	**4**	**6**
05:15 PM	0	0	0	0	0	0	0	0	0	0	0	0	0	0	0	0	0
05:30 PM	0	**1**	0	**1**	0	0	0	0	0	1	0	1	0	0	1	1	3
05:45 PM	0	0	0	0	0	0	0	0	0	2	0	2	0	0	1	1	3
Total Volume	0	1	0	1	0	0	0	0	0	5	0	5	1	0	5	6	12
% App. Total	0	100	0		0	0	0		0	100	0		16.7	0	83.3		
PHF	.000	.250	.000	.250	.000	.000	.000	.000	.000	.625	.000	.625	.250	.000	.417	.375	.500

Counts Unlimited Inc.
PO Box 1178
Corona, CA 92878
(951) 268-6268

City of Redlands
N/S: Alabama Street
E/W: I-10 Eastbound Ramps
Weather: Sunny

File Name : REDAL10EPM
Site Code : 00000017
Start Date : 2/9/2012
Page No : 2

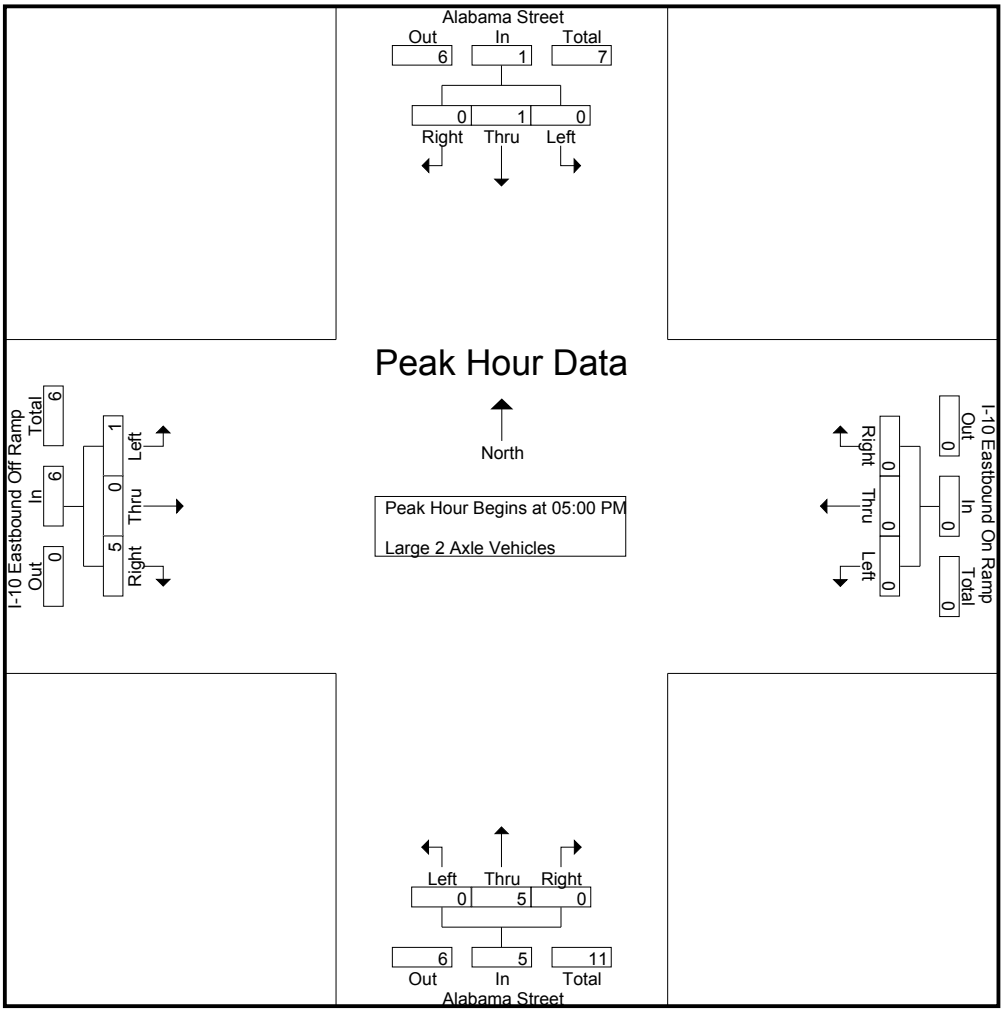

Peak Hour Analysis From 05:00 PM to 05:45 PM - Peak 1 of 1
Peak Hour for Each Approach Begins at:

	05:00 PM				05:00 PM				05:00 PM				05:00 PM			
+0 mins.	0	0	0	0	0	0	0	0	0	**2**	0	**2**	**1**	0	**3**	**4**
+15 mins.	0	0	0	0	0	0	0	0	0	0	0	0	0	0	0	0
+30 mins.	0	**1**	0	**1**	0	0	0	0	0	1	0	1	0	0	1	1
+45 mins.	0	0	0	0	0	0	0	0	0	2	0	2	0	0	1	1
Total Volume	0	1	0	1	0	0	0	0	0	5	0	5	1	0	5	6
% App. Total	0	100	0		0	0	0		0	100	0		16.7	0	83.3	
PHF	.000	.250	.000	.250	.000	.000	.000	.000	.000	.625	.000	.625	.250	.000	.417	.375

Counts Unlimited Inc.
PO Box 1178
Corona, CA 92878
(951) 268-6268

City of Redlands
N/S: Alabama Street
E/W: I-10 Eastbound Ramps
Weather: Sunny

File Name : REDAL10EPM
Site Code : 00000017
Start Date : 2/9/2012
Page No : 1

Groups Printed- 3 Axle Vehicles

	Alabama Street Southbound				I-10 Eastbound On Ramp Westbound				Alabama Street Northbound				I-10 Eastbound Off Ramp Eastbound				
Start Time	Left	Thru	Right	App. Total	Left	Thru	Right	App. Total	Left	Thru	Right	App. Total	Left	Thru	Right	App. Total	Int. Total
04:00 PM	0	0	0	0	0	0	0	0	0	0	0	0	2	0	0	2	2
04:15 PM	0	0	0	0	0	0	0	0	0	0	0	0	1	0	0	1	1
04:30 PM	1	1	0	2	0	0	0	0	0	1	1	2	0	0	0	0	4
04:45 PM	0	1	0	1	0	0	0	0	0	2	0	2	0	0	0	0	3
Total	1	2	0	3	0	0	0	0	0	3	1	4	3	0	0	3	10
05:00 PM	0	0	0	0	0	0	0	0	0	0	0	0	0	0	0	0	0
05:15 PM	0	0	0	0	0	0	0	0	0	0	0	0	0	0	0	0	0
05:30 PM	0	0	0	0	0	0	0	0	0	2	0	2	0	0	1	1	3
05:45 PM	0	0	0	0	0	0	0	0	0	0	0	0	0	0	0	0	0
Total	0	0	0	0	0	0	0	0	0	2	0	2	0	0	1	1	3
Grand Total	1	2	0	3	0	0	0	0	0	5	1	6	3	0	1	4	13
Apprch %	33.3	66.7	0		0	0	0		0	83.3	16.7		75	0	25		
Total %	7.7	15.4	0	23.1	0	0	0	0	0	38.5	7.7	46.2	23.1	0	7.7	30.8	

	Alabama Street Southbound				I-10 Eastbound On Ramp Westbound				Alabama Street Northbound				I-10 Eastbound Off Ramp Eastbound				
Start Time	Left	Thru	Right	App. Total	Left	Thru	Right	App. Total	Left	Thru	Right	App. Total	Left	Thru	Right	App. Total	Int. Total
Peak Hour Analysis From 05:00 PM to 05:45 PM - Peak 1 of 1																	
Peak Hour for Entire Intersection Begins at 05:00 PM																	
05:00 PM	0	0	0	0	0	0	0	0	0	0	0	0	0	0	0	0	0
05:15 PM	0	0	0	0	0	0	0	0	0	0	0	0	0	0	0	0	0
05:30 PM	0	0	0	0	0	0	0	0	0	**2**	0	**2**	0	0	**1**	**1**	**3**
05:45 PM	0	0	0	0	0	0	0	0	0	0	0	0	0	0	0	0	0
Total Volume	0	0	0	0	0	0	0	0	0	2	0	2	0	0	1	1	3
% App. Total	0	0	0		0	0	0		0	100	0		0	0	100		
PHF	.000	.000	.000	.000	.000	.000	.000	.000	.000	.250	.000	.250	.000	.000	.250	.250	.250

Counts Unlimited Inc.
PO Box 1178
Corona, CA 92878
(951) 268-6268

City of Redlands
N/S: Alabama Street
E/W: I-10 Eastbound Ramps
Weather: Sunny

File Name : REDAL10EPM
Site Code : 00000017
Start Date : 2/9/2012
Page No : 2

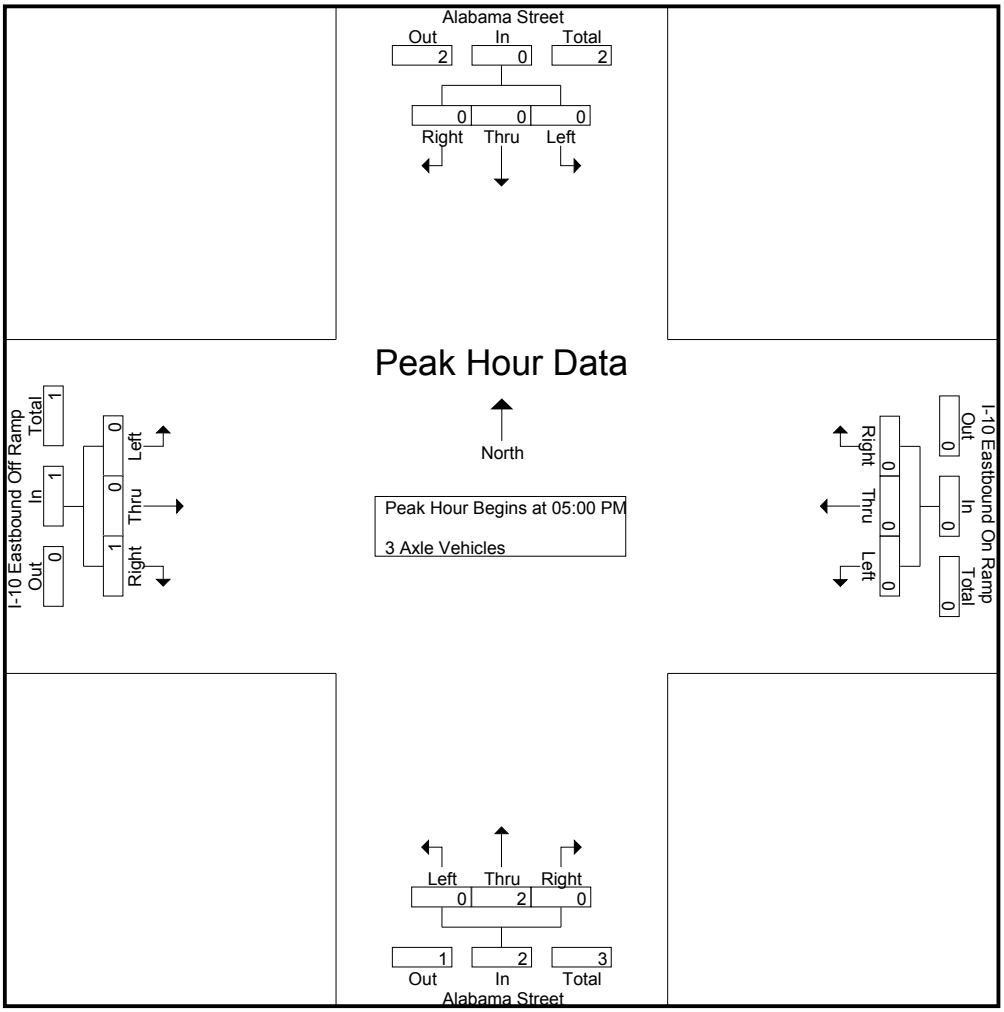

Peak Hour Analysis From 05:00 PM to 05:45 PM - Peak 1 of 1
Peak Hour for Each Approach Begins at:

	05:00 PM				05:00 PM				05:00 PM				05:00 PM			
+0 mins.	0	0	0	0	0	0	0	0	0	0	0	0	0	0	0	0
+15 mins.	0	0	0	0	0	0	0	0	0	0	0	0	0	0	0	0
+30 mins.	0	0	0	0	0	0	0	0	0	**2**	0	**2**	0	0	**1**	**1**
+45 mins.	0	0	0	0	0	0	0	0	0	0	0	0	0	0	0	0
Total Volume	0	0	0	0	0	0	0	0	0	2	0	2	0	0	1	1
% App. Total	0	0	0		0	0	0		0	100	0		0	0	100	
PHF	.000	.000	.000	.000	.000	.000	.000	.000	.000	.250	.000	.250	.000	.000	.250	.250

Counts Unlimited Inc.
PO Box 1178
Corona, CA 92878
(951) 268-6268

City of Redlands
N/S: Alabama Street
E/W: I-10 Eastbound Ramps
Weather: Sunny

File Name : REDAL10EPM
Site Code : 00000017
Start Date : 2/9/2012
Page No : 1

Groups Printed- 4+ Axle Trucks

	Alabama Street Southbound				I-10 Eastbound On Ramp Westbound				Alabama Street Northbound				I-10 Eastbound Off Ramp Eastbound				
Start Time	Left	Thru	Right	App. Total	Left	Thru	Right	App. Total	Left	Thru	Right	App. Total	Left	Thru	Right	App. Total	Int. Total
04:00 PM	0	0	0	0	0	0	0	0	0	1	1	2	3	0	1	4	6
04:15 PM	0	0	0	0	0	0	0	0	0	2	0	2	2	0	2	4	6
04:30 PM	0	2	0	2	0	0	0	0	0	2	0	2	1	0	0	1	5
04:45 PM	1	1	0	2	0	0	0	0	0	1	0	1	2	0	0	2	5
Total	1	3	0	4	0	0	0	0	0	6	1	7	8	0	3	11	22
05:00 PM	0	0	0	0	0	0	0	0	0	1	0	1	0	0	0	0	1
05:15 PM	0	0	0	0	0	0	0	0	0	0	0	0	0	0	0	0	0
05:30 PM	0	1	0	1	0	0	0	0	0	0	0	0	2	0	0	2	3
05:45 PM	0	0	0	0	0	0	0	0	0	0	0	0	2	0	0	2	2
Total	0	1	0	1	0	0	0	0	0	1	0	1	4	0	0	4	6
Grand Total	1	4	0	5	0	0	0	0	0	7	1	8	12	0	3	15	28
Apprch %	20	80	0		0	0	0		0	87.5	12.5		80	0	20		
Total %	3.6	14.3	0	17.9	0	0	0	0	0	25	3.6	28.6	42.9	0	10.7	53.6	

	Alabama Street Southbound				I-10 Eastbound On Ramp Westbound				Alabama Street Northbound				I-10 Eastbound Off Ramp Eastbound				
Start Time	Left	Thru	Right	App. Total	Left	Thru	Right	App. Total	Left	Thru	Right	App. Total	Left	Thru	Right	App. Total	Int. Total
Peak Hour Analysis From 05:00 PM to 05:45 PM - Peak 1 of 1																	
Peak Hour for Entire Intersection Begins at 05:00 PM																	
05:00 PM	0	0	0	0	0	0	0	0	0	**1**	0	**1**	0	0	0	0	1
05:15 PM	0	0	0	0	0	0	0	0	0	0	0	0	0	0	0	0	0
05:30 PM	0	**1**	0	**1**	0	0	0	0	0	0	0	0	**2**	0	0	**2**	**3**
05:45 PM	0	0	0	0	0	0	0	0	0	0	0	0	2	0	0	2	2
Total Volume	0	1	0	1	0	0	0	0	0	1	0	1	4	0	0	4	6
% App. Total	0	100	0		0	0	0		0	100	0		100	0	0		
PHF	.000	.250	.000	.250	.000	.000	.000	.000	.000	.250	.000	.250	.500	.000	.000	.500	.500

Counts Unlimited Inc.
PO Box 1178
Corona, CA 92878
(951) 268-6268

City of Redlands
N/S: Alabama Street
E/W: I-10 Eastbound Ramps
Weather: Sunny

File Name : REDAL10EPM
Site Code : 00000017
Start Date : 2/9/2012
Page No : 2

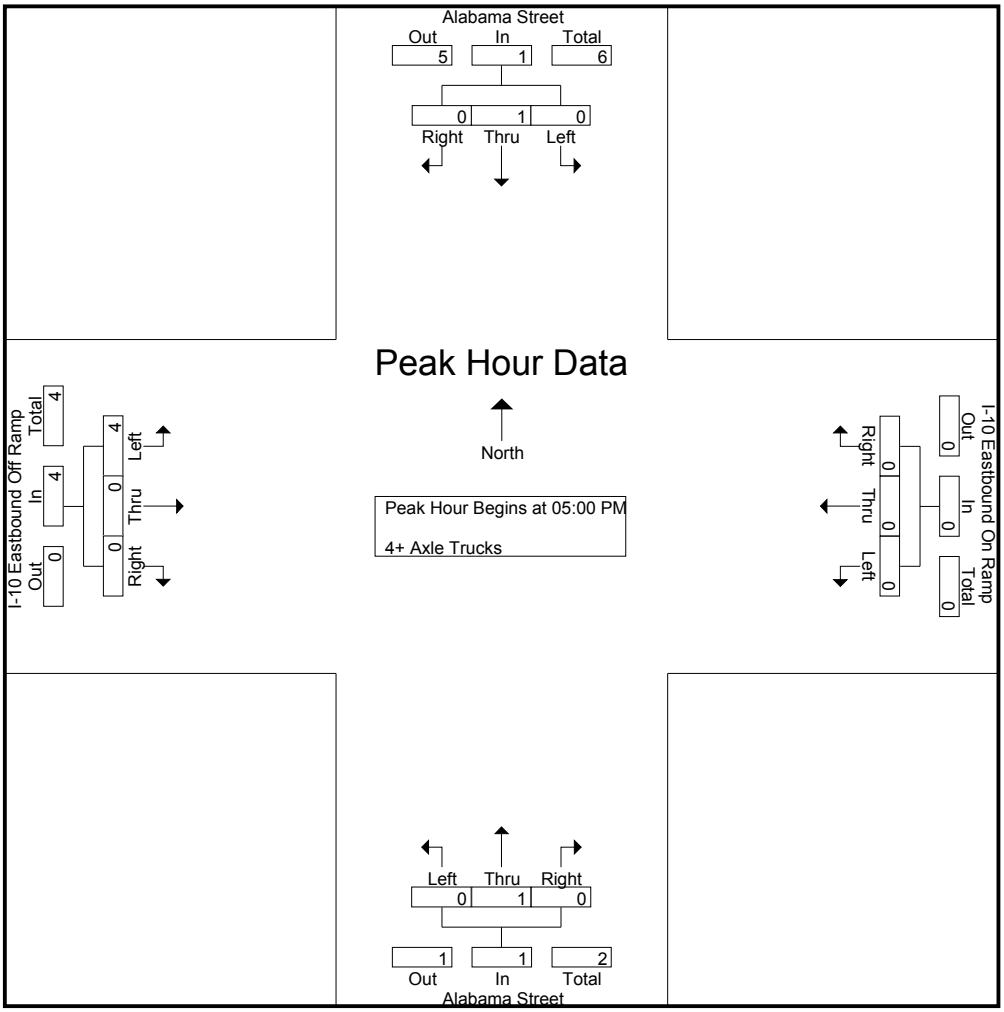

Peak Hour Analysis From 05:00 PM to 05:45 PM - Peak 1 of 1
Peak Hour for Each Approach Begins at:

	05:00 PM				05:00 PM				05:00 PM				05:00 PM			
+0 mins.	0	0	0	0	0	0	0	0	0	**1**	0	**1**	0	0	0	0
+15 mins.	0	0	0	0	0	0	0	0	0	0	0	0	0	0	0	0
+30 mins.	0	**1**	0	**1**	0	0	0	0	0	0	0	0	**2**	0	0	**2**
+45 mins.	0	0	0	0	0	0	0	0	0	0	0	0	2	0	0	2
Total Volume	0	1	0	1	0	0	0	0	0	1	0	1	4	0	0	4
% App. Total	0	100	0		0	0	0		0	100	0		100	0	0	
PHF	.000	.250	.000	.250	.000	.000	.000	.000	.000	.250	.000	.250	.500	.000	.000	.500

Counts Unlimited Inc.
PO Box 1178
Corona, CA 92878
(951) 268-6268

City of Redlands
N/S: Alabama Street
E/W: Redlands Boulevard
Weather: Sunny

File Name : REDALREAM
Site Code : 00000093
Start Date : 2/9/2012
Page No : 1

Groups Printed- Passenger Vehicles - Large 2 Axle Vehicles - 3 Axle Vehicles - 4+ Axle Trucks

	Alabama Street Southbound				Redlands Boulevard Westbound				Alabama Street Northbound				Redlands Boulevard Eastbound				
Start Time	Left	Thru	Right	App. Total	Left	Thru	Right	App. Total	Left	Thru	Right	App. Total	Left	Thru	Right	App. Total	Int. Total
07:00 AM	16	83	21	120	8	69	14	91	9	105	1	115	10	25	1	36	362
07:15 AM	20	90	25	135	10	72	16	98	12	108	9	129	11	28	2	41	403
07:30 AM	28	83	26	137	13	70	17	100	13	115	9	137	21	25	8	54	428
07:45 AM	23	146	34	203	10	76	25	111	18	112	9	139	24	47	8	79	532
Total	87	402	106	595	41	287	72	400	52	440	28	520	66	125	19	210	1725
08:00 AM	12	121	40	173	10	60	21	91	26	121	8	155	25	35	5	65	484
08:15 AM	19	95	50	164	9	69	27	105	10	88	14	112	26	51	5	82	463
08:30 AM	23	93	37	153	7	59	18	84	11	76	7	94	32	45	5	82	413
08:45 AM	18	127	44	189	17	47	17	81	13	77	10	100	36	42	6	84	454
Total	72	436	171	679	43	235	83	361	60	362	39	461	119	173	21	313	1814
Grand Total	159	838	277	1274	84	522	155	761	112	802	67	981	185	298	40	523	3539
Apprch %	12.5	65.8	21.7		11	68.6	20.4		11.4	81.8	6.8		35.4	57	7.6		
Total %	4.5	23.7	7.8	36	2.4	14.7	4.4	21.5	3.2	22.7	1.9	27.7	5.2	8.4	1.1	14.8	
Passenger Vehicles	153	813	260	1226	79	509	150	738	107	770	65	942	163	281	34	478	3384
% Passenger Vehicles	96.2	97	93.9	96.2	94	97.5	96.8	97	95.5	96	97	96	88.1	94.3	85	91.4	95.6
Large 2 Axle Vehicles	1	10	5	16	4	11	3	18	4	12	1	17	13	14	4	31	82
% Large 2 Axle Vehicles	0.6	1.2	1.8	1.3	4.8	2.1	1.9	2.4	3.6	1.5	1.5	1.7	7	4.7	10	5.9	2.3
3 Axle Vehicles	2	5	2	9	0	2	2	4	0	6	1	7	3	1	1	5	25
% 3 Axle Vehicles	1.3	0.6	0.7	0.7	0	0.4	1.3	0.5	0	0.7	1.5	0.7	1.6	0.3	2.5	1	0.7
4+ Axle Trucks	3	10	10	23	1	0	0	1	1	14	0	15	6	2	1	9	48
% 4+ Axle Trucks	1.9	1.2	3.6	1.8	1.2	0	0	0.1	0.9	1.7	0	1.5	3.2	0.7	2.5	1.7	1.4

	Alabama Street Southbound				Redlands Boulevard Westbound				Alabama Street Northbound				Redlands Boulevard Eastbound				
Start Time	Left	Thru	Right	App. Total	Left	Thru	Right	App. Total	Left	Thru	Right	App. Total	Left	Thru	Right	App. Total	Int. Total
Peak Hour Analysis From 07:00 AM to 08:45 AM - Peak 1 of 1																	
Peak Hour for Entire Intersection Begins at 07:30 AM																	
07:30 AM	**28**	83	26	137	**13**	70	17	100	13	115	9	137	21	25	**8**	54	428
07:45 AM	23	**146**	34	**203**	10	**76**	25	**111**	18	112	9	139	24	47	8	79	**532**
08:00 AM	12	121	40	173	10	60	21	91	**26**	**121**	8	**155**	25	35	5	65	484
08:15 AM	19	95	**50**	164	9	69	**27**	105	10	88	**14**	112	**26**	**51**	5	**82**	463
Total Volume	82	445	150	677	42	275	90	407	67	436	40	543	96	158	26	280	1907
% App. Total	12.1	65.7	22.2		10.3	67.6	22.1		12.3	80.3	7.4		34.3	56.4	9.3		
PHF	.732	.762	.750	.834	.808	.905	.833	.917	.644	.901	.714	.876	.923	.775	.813	.854	.896

Counts Unlimited Inc.
PO Box 1178
Corona, CA 92878
(951) 268-6268

City of Redlands
N/S: Alabama Street
E/W: Redlands Boulevard
Weather: Sunny

File Name : REDALREAM
Site Code : 00000093
Start Date : 2/9/2012
Page No : 2

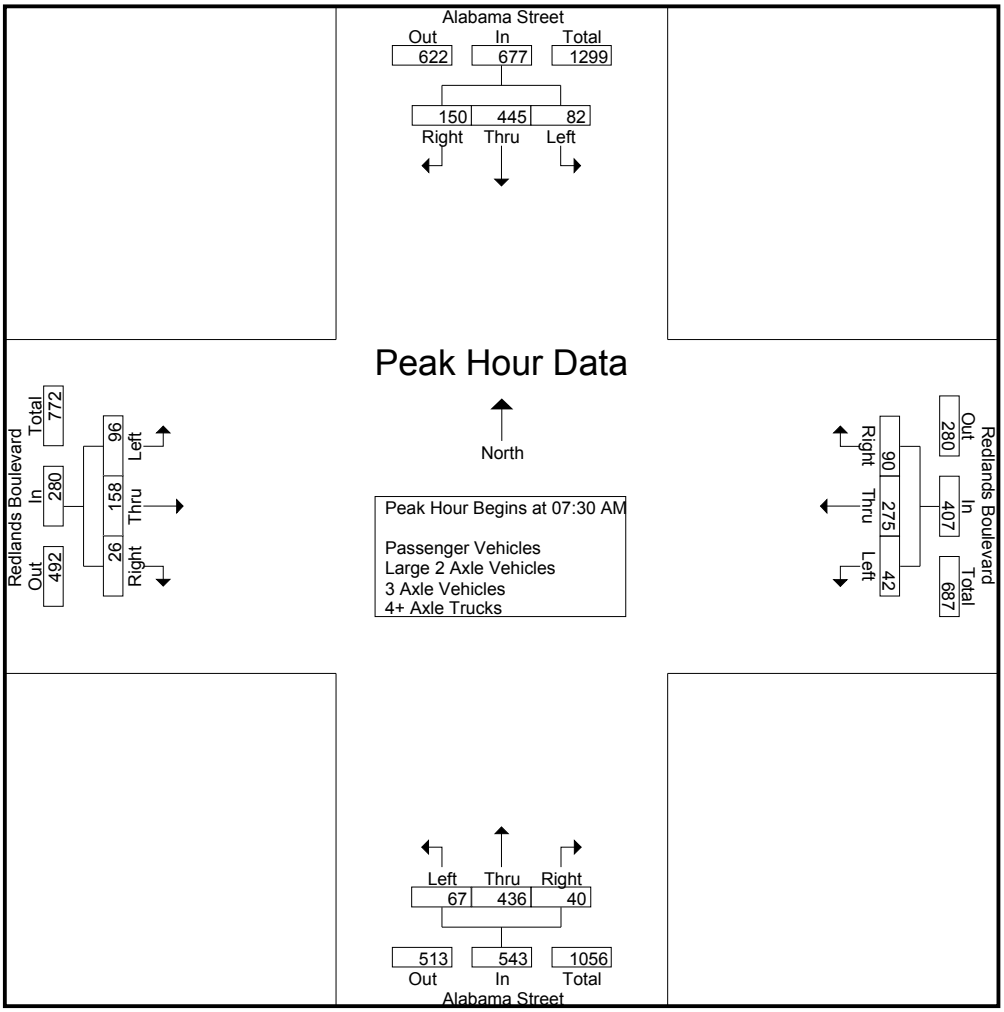

Peak Hour Analysis From 07:00 AM to 08:45 AM - Peak 1 of 1
Peak Hour for Each Approach Begins at:

	07:45 AM				07:30 AM				07:15 AM				08:00 AM			
+0 mins.	**23**	**146**	34	**203**	**13**	70	17	100	12	108	**9**	129	25	35	5	65
+15 mins.	12	121	40	173	10	**76**	25	**111**	13	115	9	137	26	**51**	5	82
+30 mins.	19	95	**50**	164	10	60	21	91	18	112	9	139	32	45	5	82
+45 mins.	23	93	37	153	9	69	**27**	105	**26**	**121**	8	**155**	**36**	42	**6**	**84**
Total Volume	77	455	161	693	42	275	90	407	69	456	35	560	119	173	21	313
% App. Total	11.1	65.7	23.2		10.3	67.6	22.1		12.3	81.4	6.2		38	55.3	6.7	
PHF	.837	.779	.805	.853	.808	.905	.833	.917	.663	.942	.972	.903	.826	.848	.875	.932

Counts Unlimited Inc.
PO Box 1178
Corona, CA 92878
(951) 268-6268

City of Redlands
N/S: Alabama Street
E/W: Redlands Boulevard
Weather: Sunny

File Name : REDALREAM
Site Code : 00000093
Start Date : 2/9/2012
Page No : 1

Groups Printed- Passenger Vehicles

	Alabama Street Southbound				Redlands Boulevard Westbound				Alabama Street Northbound				Redlands Boulevard Eastbound				
Start Time	Left	Thru	Right	App. Total	Left	Thru	Right	App. Total	Left	Thru	Right	App. Total	Left	Thru	Right	App. Total	Int. Total
07:00 AM	16	81	21	118	7	68	14	89	9	101	1	111	8	24	1	33	351
07:15 AM	18	84	22	124	8	71	16	95	11	105	8	124	9	27	2	38	381
07:30 AM	27	81	25	133	13	70	16	99	13	111	9	133	16	23	7	46	411
07:45 AM	23	142	32	197	9	73	24	106	17	108	9	134	23	44	8	75	512
Total	84	388	100	572	37	282	70	389	50	425	27	502	56	118	18	192	1655
08:00 AM	12	118	36	166	9	60	20	89	24	114	8	146	24	32	5	61	462
08:15 AM	19	92	48	159	9	66	27	102	10	84	14	108	22	50	2	74	443
08:30 AM	21	93	35	149	7	58	18	83	11	74	7	92	28	42	5	75	399
08:45 AM	17	122	41	180	17	43	15	75	12	73	9	94	33	39	4	76	425
Total	69	425	160	654	42	227	80	349	57	345	38	440	107	163	16	286	1729
Grand Total	153	813	260	1226	79	509	150	738	107	770	65	942	163	281	34	478	3384
Apprch %	12.5	66.3	21.2		10.7	69	20.3		11.4	81.7	6.9		34.1	58.8	7.1		
Total %	4.5	24	7.7	36.2	2.3	15	4.4	21.8	3.2	22.8	1.9	27.8	4.8	8.3	1	14.1	

	Alabama Street Southbound				Redlands Boulevard Westbound				Alabama Street Northbound				Redlands Boulevard Eastbound				
Start Time	Left	Thru	Right	App. Total	Left	Thru	Right	App. Total	Left	Thru	Right	App. Total	Left	Thru	Right	App. Total	Int. Total
Peak Hour Analysis From 07:30 AM to 08:15 AM - Peak 1 of 1																	
Peak Hour for Entire Intersection Begins at 07:30 AM																	
07:30 AM	**27**	81	25	133	**13**	70	16	99	13	111	9	133	16	23	7	46	411
07:45 AM	23	**142**	32	**197**	9	**73**	24	**106**	17	108	9	134	23	44	**8**	**75**	**512**
08:00 AM	12	118	36	166	9	60	20	89	**24**	**114**	8	**146**	**24**	32	5	61	462
08:15 AM	19	92	**48**	159	9	66	**27**	102	10	84	**14**	108	22	**50**	2	74	443
Total Volume	81	433	141	655	40	269	87	396	64	417	40	521	85	149	22	256	1828
% App. Total	12.4	66.1	21.5		10.1	67.9	22		12.3	80	7.7		33.2	58.2	8.6		
PHF	.750	.762	.734	.831	.769	.921	.806	.934	.667	.914	.714	.892	.885	.745	.688	.853	.893

Counts Unlimited Inc.
PO Box 1178
Corona, CA 92878
(951) 268-6268

City of Redlands
N/S: Alabama Street
E/W: Redlands Boulevard
Weather: Sunny

File Name : REDALREAM
Site Code : 00000093
Start Date : 2/9/2012
Page No : 2

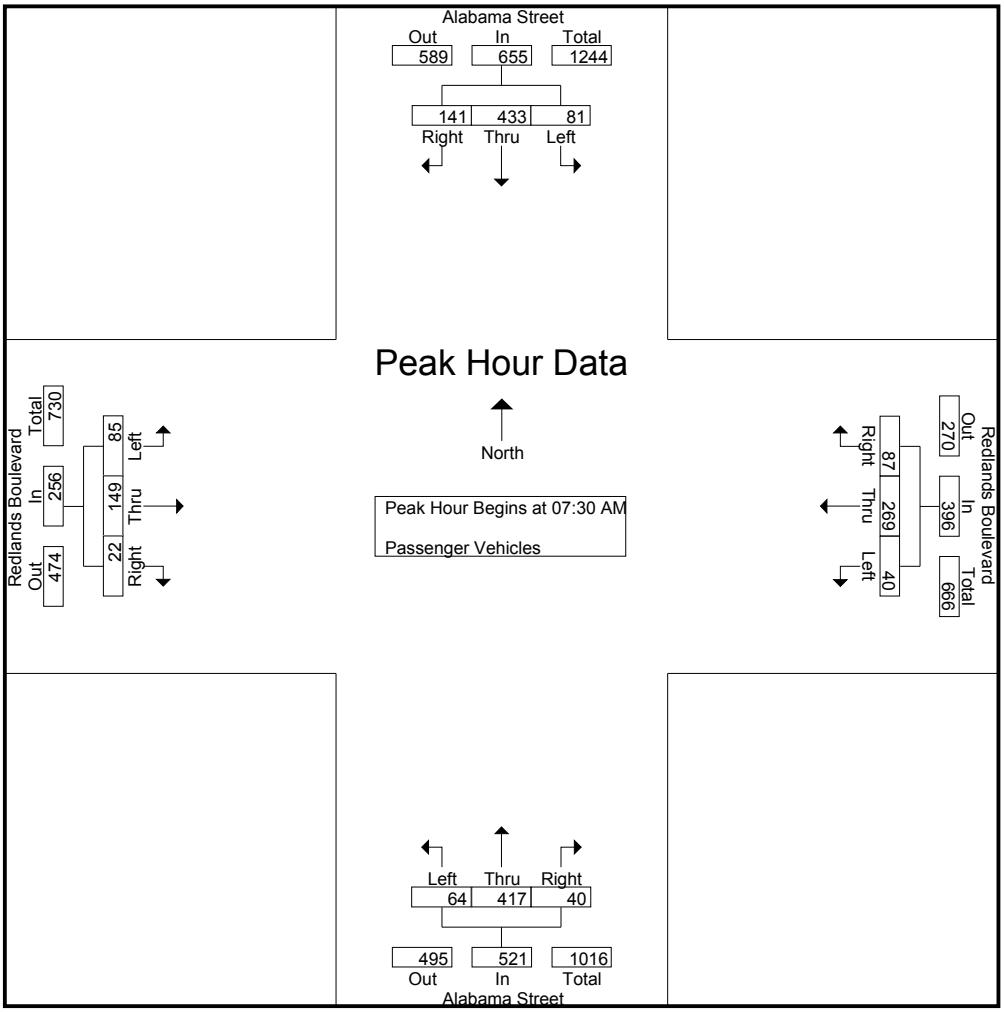

Peak Hour Analysis From 07:30 AM to 08:15 AM - Peak 1 of 1
Peak Hour for Each Approach Begins at:

	07:30 AM				07:30 AM				07:30 AM				07:30 AM			
+0 mins.	**27**	81	25	133	**13**	70	16	99	13	111	9	133	16	23	7	46
+15 mins.	23	**142**	32	**197**	9	**73**	24	**106**	17	108	9	134	23	44	**8**	**75**
+30 mins.	12	118	36	166	9	60	20	89	**24**	**114**	8	**146**	**24**	32	5	61
+45 mins.	19	92	**48**	159	9	66	**27**	102	10	84	**14**	108	22	**50**	2	74
Total Volume	81	433	141	655	40	269	87	396	64	417	40	521	85	149	22	256
% App. Total	12.4	66.1	21.5		10.1	67.9	22		12.3	80	7.7		33.2	58.2	8.6	
PHF	.750	.762	.734	.831	.769	.921	.806	.934	.667	.914	.714	.892	.885	.745	.688	.853

Counts Unlimited Inc.
PO Box 1178
Corona, CA 92878
(951) 268-6268

City of Redlands
N/S: Alabama Street
E/W: Redlands Boulevard
Weather: Sunny

File Name : REDALREAM
Site Code : 00000093
Start Date : 2/9/2012
Page No : 1

Groups Printed- Large 2 Axle Vehicles

	Alabama Street Southbound				Redlands Boulevard Westbound				Alabama Street Northbound				Redlands Boulevard Eastbound				
Start Time	Left	Thru	Right	App. Total	Left	Thru	Right	App. Total	Left	Thru	Right	App. Total	Left	Thru	Right	App. Total	Int. Total
07:00 AM	0	2	0	2	1	1	0	2	0	2	0	2	1	1	0	2	8
07:15 AM	0	2	0	2	1	1	0	2	0	2	0	2	1	1	0	2	8
07:30 AM	0	0	0	0	0	0	0	0	0	1	0	1	4	2	1	7	8
07:45 AM	0	1	1	2	1	3	1	5	1	2	0	3	1	3	0	4	14
Total	0	5	1	6	3	5	1	9	1	7	0	8	7	7	1	15	38
08:00 AM	0	2	2	4	1	0	0	1	2	2	0	4	1	2	0	3	12
08:15 AM	0	1	1	2	0	3	0	3	0	2	0	2	2	1	1	4	11
08:30 AM	0	0	1	1	0	0	0	0	0	1	0	1	1	1	0	2	4
08:45 AM	1	2	0	3	0	3	2	5	1	0	1	2	2	3	2	7	17
Total	1	5	4	10	1	6	2	9	3	5	1	9	6	7	3	16	44
Grand Total	1	10	5	16	4	11	3	18	4	12	1	17	13	14	4	31	82
Apprch %	6.2	62.5	31.2		22.2	61.1	16.7		23.5	70.6	5.9		41.9	45.2	12.9		
Total %	1.2	12.2	6.1	19.5	4.9	13.4	3.7	22	4.9	14.6	1.2	20.7	15.9	17.1	4.9	37.8	

	Alabama Street Southbound				Redlands Boulevard Westbound				Alabama Street Northbound				Redlands Boulevard Eastbound				
Start Time	Left	Thru	Right	App. Total	Left	Thru	Right	App. Total	Left	Thru	Right	App. Total	Left	Thru	Right	App. Total	Int. Total
Peak Hour Analysis From 07:30 AM to 08:15 AM - Peak 1 of 1																	
Peak Hour for Entire Intersection Begins at 07:30 AM																	
07:30 AM	0	0	0	0	0	0	0	0	0	1	0	1	**4**	2	**1**	**7**	8
07:45 AM	0	1	1	2	**1**	**3**	**1**	**5**	1	**2**	0	3	1	**3**	0	4	**14**
08:00 AM	0	**2**	**2**	**4**	1	0	0	1	**2**	2	0	**4**	1	2	0	3	12
08:15 AM	0	1	1	2	0	3	0	3	0	2	0	2	2	1	1	4	11
Total Volume	0	4	4	8	2	6	1	9	3	7	0	10	8	8	2	18	45
% App. Total	0	50	50		22.2	66.7	11.1		30	70	0		44.4	44.4	11.1		
PHF	.000	.500	.500	.500	.500	.500	.250	.450	.375	.875	.000	.625	.500	.667	.500	.643	.804

Counts Unlimited Inc.
PO Box 1178
Corona, CA 92878
(951) 268-6268

City of Redlands
N/S: Alabama Street
E/W: Redlands Boulevard
Weather: Sunny

File Name : REDALREAM
Site Code : 00000093
Start Date : 2/9/2012
Page No : 2

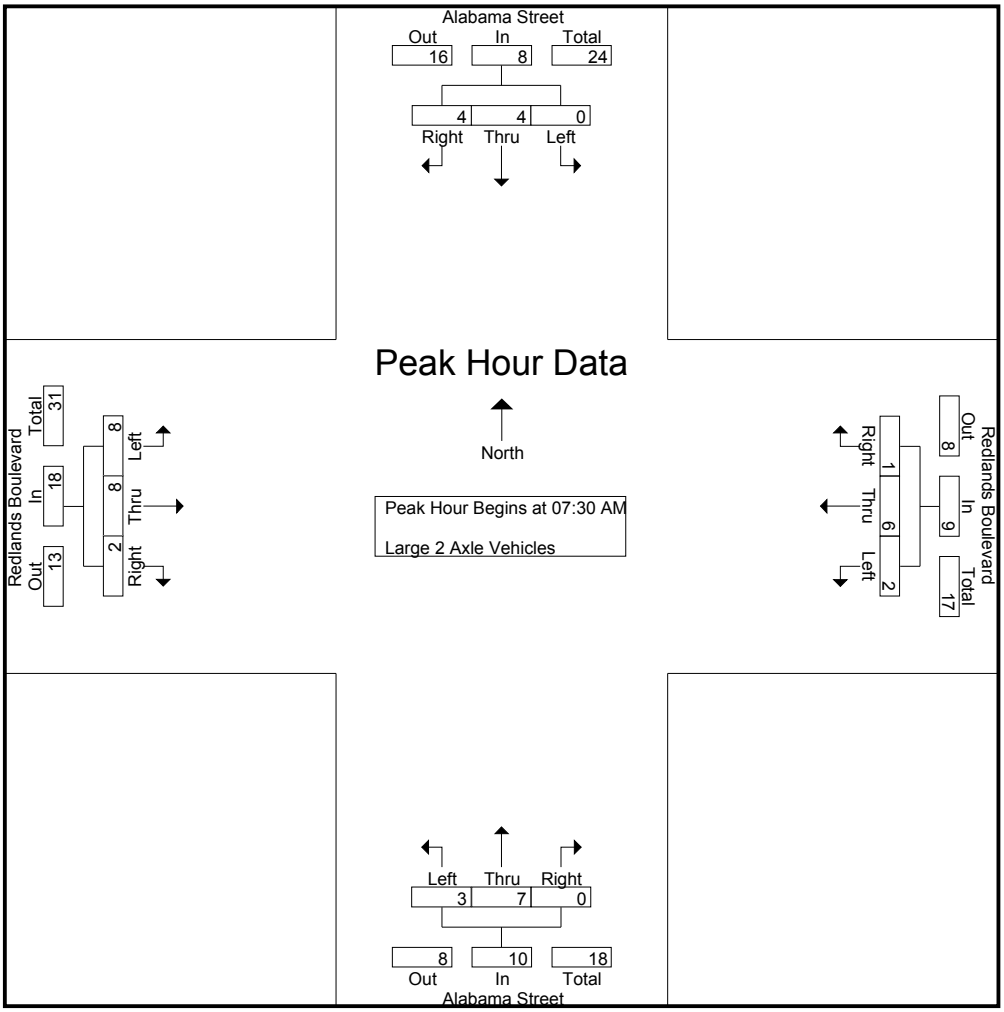

Peak Hour Analysis From 07:30 AM to 08:15 AM - Peak 1 of 1
Peak Hour for Each Approach Begins at:

	07:30 AM				07:30 AM				07:30 AM				07:30 AM			
+0 mins.	0	0	0	0	0	0	0	0	0	1	0	1	**4**	2	**1**	**7**
+15 mins.	0	1	1	2	**1**	**3**	**1**	**5**	1	**2**	0	3	1	**3**	0	4
+30 mins.	0	**2**	**2**	**4**	1	0	0	1	**2**	2	0	**4**	1	2	0	3
+45 mins.	0	1	1	2	0	3	0	3	0	2	0	2	2	1	1	4
Total Volume	0	4	4	8	2	6	1	9	3	7	0	10	8	8	2	18
% App. Total	0	50	50		22.2	66.7	11.1		30	70	0		44.4	44.4	11.1	
PHF	.000	.500	.500	.500	.500	.500	.250	.450	.375	.875	.000	.625	.500	.667	.500	.643

Counts Unlimited Inc.
PO Box 1178
Corona, CA 92878
(951) 268-6268

City of Redlands
N/S: Alabama Street
E/W: Redlands Boulevard
Weather: Sunny

File Name : REDALREAM
Site Code : 00000093
Start Date : 2/9/2012
Page No : 1

Groups Printed- 3 Axle Vehicles

	Alabama Street Southbound				Redlands Boulevard Westbound				Alabama Street Northbound				Redlands Boulevard Eastbound				
Start Time	Left	Thru	Right	App. Total	Left	Thru	Right	App. Total	Left	Thru	Right	App. Total	Left	Thru	Right	App. Total	Int. Total
07:00 AM	0	0	0	0	0	0	0	0	0	1	0	1	0	0	0	0	1
07:15 AM	1	1	0	2	0	0	0	0	0	0	1	1	1	0	0	1	4
07:30 AM	0	2	0	2	0	0	1	1	0	1	0	1	0	0	0	0	4
07:45 AM	0	1	0	1	0	0	0	0	0	1	0	1	0	0	0	0	2
Total	1	4	0	5	0	0	1	1	0	3	1	4	1	0	0	1	11
08:00 AM	0	1	1	2	0	0	1	1	0	1	0	1	0	0	0	0	4
08:15 AM	0	0	1	1	0	0	0	0	0	1	0	1	0	0	1	1	3
08:30 AM	1	0	0	1	0	1	0	1	0	0	0	0	1	1	0	2	4
08:45 AM	0	0	0	0	0	1	0	1	0	1	0	1	1	0	0	1	3
Total	1	1	2	4	0	2	1	3	0	3	0	3	2	1	1	4	14
Grand Total	2	5	2	9	0	2	2	4	0	6	1	7	3	1	1	5	25
Apprch %	22.2	55.6	22.2		0	50	50		0	85.7	14.3		60	20	20		
Total %	8	20	8	36	0	8	8	16	0	24	4	28	12	4	4	20	

	Alabama Street Southbound				Redlands Boulevard Westbound				Alabama Street Northbound				Redlands Boulevard Eastbound				
Start Time	Left	Thru	Right	App. Total	Left	Thru	Right	App. Total	Left	Thru	Right	App. Total	Left	Thru	Right	App. Total	Int. Total
Peak Hour Analysis From 07:30 AM to 08:15 AM - Peak 1 of 1																	
Peak Hour for Entire Intersection Begins at 07:30 AM																	
07:30 AM	0	**2**	0	**2**	0	0	**1**	**1**	0	**1**	0	**1**	0	0	0	0	**4**
07:45 AM	0	1	0	1	0	0	0	0	0	1	0	1	0	0	0	0	2
08:00 AM	0	1	**1**	2	0	0	1	1	0	1	0	1	0	0	0	0	4
08:15 AM	0	0	1	1	0	0	0	0	0	1	0	1	0	0	**1**	**1**	3
Total Volume	0	4	2	6	0	0	2	2	0	4	0	4	0	0	1	1	13
% App. Total	0	66.7	33.3		0	0	100		0	100	0		0	0	100		
PHF	.000	.500	.500	.750	.000	.000	.500	.500	.000	1.00	.000	1.00	.000	.000	.250	.250	.813

Counts Unlimited Inc.
PO Box 1178
Corona, CA 92878
(951) 268-6268

City of Redlands
N/S: Alabama Street
E/W: Redlands Boulevard
Weather: Sunny

File Name : REDALREAM
Site Code : 00000093
Start Date : 2/9/2012
Page No : 2

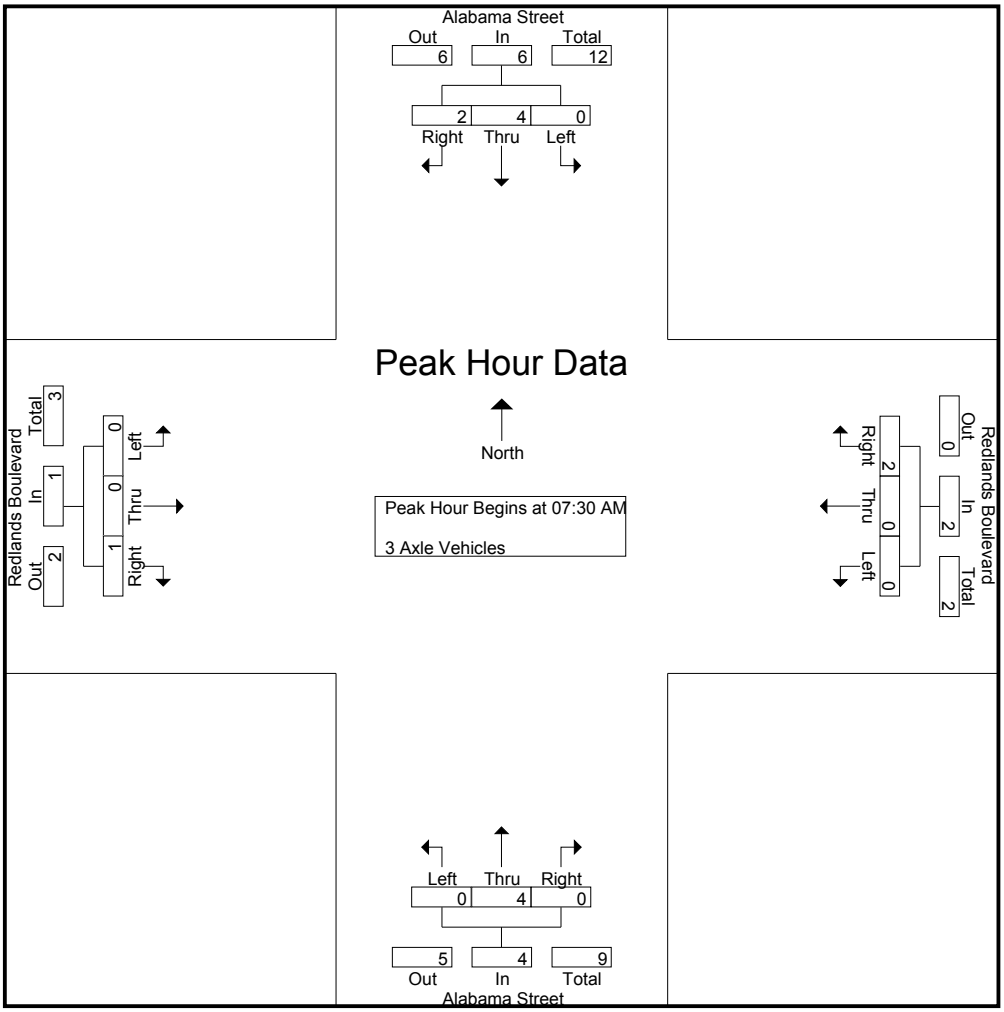

Peak Hour Analysis From 07:30 AM to 08:15 AM - Peak 1 of 1
Peak Hour for Each Approach Begins at:

	07:30 AM				07:30 AM				07:30 AM				07:30 AM			
+0 mins.	0	**2**	0	**2**	0	0	**1**	**1**	0	**1**	0	**1**	0	0	0	0
+15 mins.	0	1	0	1	0	0	0	0	0	1	0	1	0	0	0	0
+30 mins.	0	1	**1**	2	0	0	1	1	0	1	0	1	0	0	0	0
+45 mins.	0	0	1	1	0	0	0	0	0	1	0	1	0	0	**1**	**1**
Total Volume	0	4	2	6	0	0	2	2	0	4	0	4	0	0	1	1
% App. Total	0	66.7	33.3		0	0	100		0	100	0		0	0	100	
PHF	.000	.500	.500	.750	.000	.000	.500	.500	.000	1.000	.000	1.000	.000	.000	.250	.250

Counts Unlimited Inc.
PO Box 1178
Corona, CA 92878
(951) 268-6268

City of Redlands
N/S: Alabama Street
E/W: Redlands Boulevard
Weather: Sunny

File Name : REDALREAM
Site Code : 00000093
Start Date : 2/9/2012
Page No : 1

Groups Printed- 4+ Axle Trucks

	Alabama Street Southbound				Redlands Boulevard Westbound				Alabama Street Northbound				Redlands Boulevard Eastbound				
Start Time	Left	Thru	Right	App. Total	Left	Thru	Right	App. Total	Left	Thru	Right	App. Total	Left	Thru	Right	App. Total	Int. Total
07:00 AM	0	0	0	0	0	0	0	0	0	1	0	1	1	0	0	1	2
07:15 AM	1	3	3	7	1	0	0	1	1	1	0	2	0	0	0	0	10
07:30 AM	1	0	1	2	0	0	0	0	0	2	0	2	1	0	0	1	5
07:45 AM	0	2	1	3	0	0	0	0	0	1	0	1	0	0	0	0	4
Total	2	5	5	12	1	0	0	1	1	5	0	6	2	0	0	2	21
08:00 AM	0	0	1	1	0	0	0	0	0	4	0	4	0	1	0	1	6
08:15 AM	0	2	0	2	0	0	0	0	0	1	0	1	2	0	1	3	6
08:30 AM	1	0	1	2	0	0	0	0	0	1	0	1	2	1	0	3	6
08:45 AM	0	3	3	6	0	0	0	0	0	3	0	3	0	0	0	0	9
Total	1	5	5	11	0	0	0	0	0	9	0	9	4	2	1	7	27
Grand Total	3	10	10	23	1	0	0	1	1	14	0	15	6	2	1	9	48
Apprch %	13	43.5	43.5		100	0	0		6.7	93.3	0		66.7	22.2	11.1		
Total %	6.2	20.8	20.8	47.9	2.1	0	0	2.1	2.1	29.2	0	31.2	12.5	4.2	2.1	18.8	

	Alabama Street Southbound				Redlands Boulevard Westbound				Alabama Street Northbound				Redlands Boulevard Eastbound				
Start Time	Left	Thru	Right	App. Total	Left	Thru	Right	App. Total	Left	Thru	Right	App. Total	Left	Thru	Right	App. Total	Int. Total
Peak Hour Analysis From 07:30 AM to 08:15 AM - Peak 1 of 1																	
Peak Hour for Entire Intersection Begins at 07:30 AM																	
07:30 AM	**1**	0	**1**	2	0	0	0	0	0	2	0	2	1	0	0	1	5
07:45 AM	0	**2**	1	**3**	0	0	0	0	0	1	0	1	0	0	0	0	4
08:00 AM	0	0	1	1	0	0	0	0	0	**4**	0	**4**	0	**1**	0	1	**6**
08:15 AM	0	2	0	2	0	0	0	0	0	1	0	1	**2**	0	**1**	**3**	6
Total Volume	1	4	3	8	0	0	0	0	0	8	0	8	3	1	1	5	21
% App. Total	12.5	50	37.5		0	0	0		0	100	0		60	20	20		
PHF	.250	.500	.750	.667	.000	.000	.000	.000	.000	.500	.000	.500	.375	.250	.250	.417	.875

Counts Unlimited Inc.
PO Box 1178
Corona, CA 92878
(951) 268-6268

City of Redlands
N/S: Alabama Street
E/W: Redlands Boulevard
Weather: Sunny

File Name : REDALREAM
Site Code : 00000093
Start Date : 2/9/2012
Page No : 2

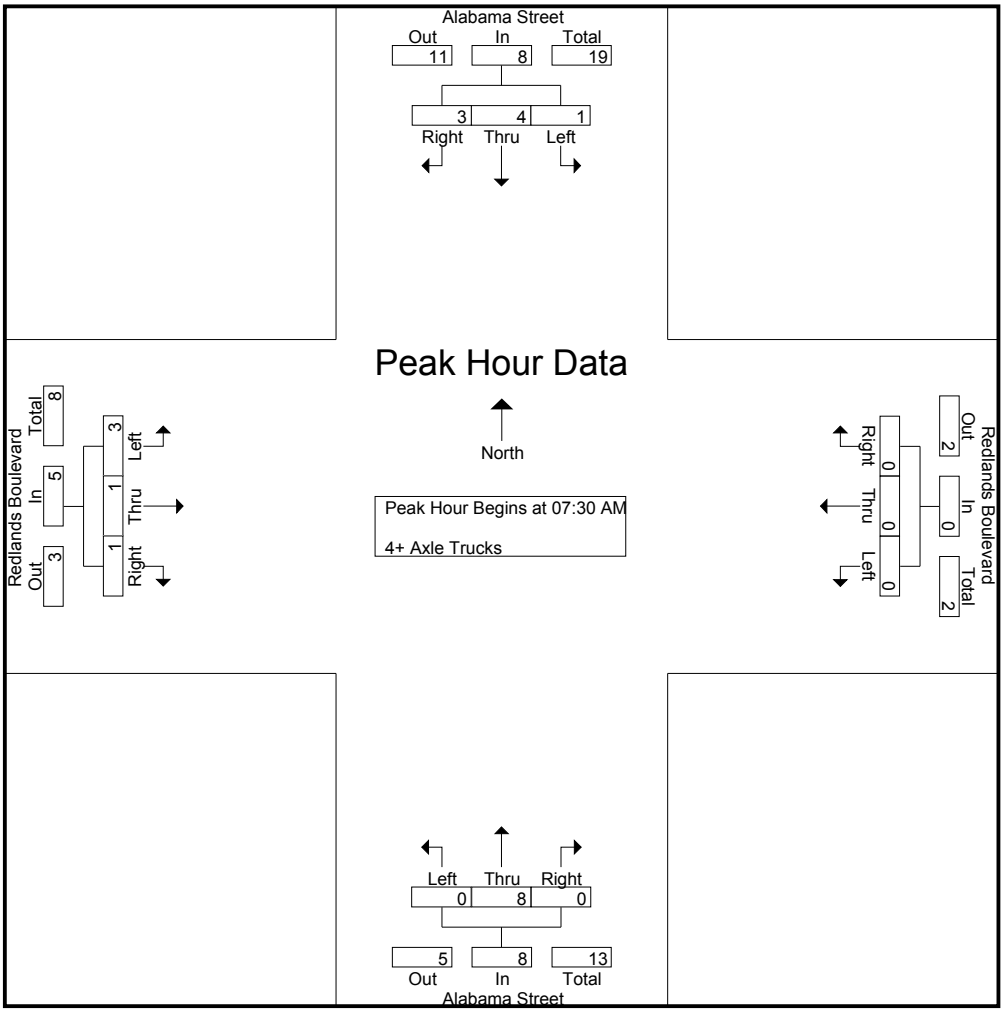

Peak Hour Analysis From 07:30 AM to 08:15 AM - Peak 1 of 1
Peak Hour for Each Approach Begins at:

	07:30 AM				07:30 AM				07:30 AM				07:30 AM			
+0 mins.	**1**	0	**1**	2	0	0	0	0	0	2	0	2	1	0	0	1
+15 mins.	0	**2**	1	**3**	0	0	0	0	0	1	0	1	0	0	0	0
+30 mins.	0	0	1	1	0	0	0	0	0	**4**	0	**4**	0	**1**	0	1
+45 mins.	0	2	0	2	0	0	0	0	0	1	0	1	**2**	0	**1**	**3**
Total Volume	1	4	3	8	0	0	0	0	0	8	0	8	3	1	1	5
% App. Total	12.5	50	37.5		0	0	0		0	100	0		60	20	20	
PHF	.250	.500	.750	.667	.000	.000	.000	.000	.000	.500	.000	.500	.375	.250	.250	.417

Counts Unlimited Inc.
PO Box 1178
Corona, CA 92878
(951) 268-6268

City of Redlands
N/S: Alabama Street
E/W: Redlands Boulevard
Weather: Sunny

File Name : REDALREPM
Site Code : 00000093
Start Date : 2/9/2012
Page No : 1

Groups Printed- Passenger Vehicles - Large 2 Axle Vehicles - 3 Axle Vehicles - 4+ Axle Trucks

	Alabama Street Southbound				Redlands Boulevard Westbound				Alabama Street Northbound				Redlands Boulevard Eastbound				
Start Time	Left	Thru	Right	App. Total	Left	Thru	Right	App. Total	Left	Thru	Right	App. Total	Left	Thru	Right	App. Total	Int. Total
04:00 PM	31	99	27	157	31	83	41	155	15	140	11	166	67	102	10	179	657
04:15 PM	29	106	22	157	24	92	42	158	27	140	12	179	56	107	13	176	670
04:30 PM	35	99	33	167	22	75	41	138	19	120	22	161	75	128	20	223	689
04:45 PM	39	110	20	169	14	82	26	122	14	119	16	149	60	115	19	194	634
Total	134	414	102	650	91	332	150	573	75	519	61	655	258	452	62	772	2650
05:00 PM	36	102	22	160	12	82	41	135	12	129	13	154	62	124	12	198	647
05:15 PM	21	125	26	172	21	83	48	152	21	139	19	179	68	131	31	230	733
05:30 PM	30	155	32	217	28	98	30	156	9	128	25	162	71	156	20	247	782
05:45 PM	39	149	20	208	24	79	34	137	23	126	20	169	71	115	14	200	714
Total	126	531	100	757	85	342	153	580	65	522	77	664	272	526	77	875	2876
Grand Total	260	945	202	1407	176	674	303	1153	140	1041	138	1319	530	978	139	1647	5526
Apprch %	18.5	67.2	14.4		15.3	58.5	26.3		10.6	78.9	10.5		32.2	59.4	8.4		
Total %	4.7	17.1	3.7	25.5	3.2	12.2	5.5	20.9	2.5	18.8	2.5	23.9	9.6	17.7	2.5	29.8	
Passenger Vehicles	259	932	199	1390	174	662	301	1137	136	1024	137	1297	525	970	137	1632	5456
% Passenger Vehicles	99.6	98.6	98.5	98.8	98.9	98.2	99.3	98.6	97.1	98.4	99.3	98.3	99.1	99.2	98.6	99.1	98.7
Large 2 Axle Vehicles	1	5	0	6	2	7	2	11	2	11	1	14	1	6	2	9	40
% Large 2 Axle Vehicles	0.4	0.5	0	0.4	1.1	1	0.7	1	1.4	1.1	0.7	1.1	0.2	0.6	1.4	0.5	0.7
3 Axle Vehicles	0	4	1	5	0	2	0	2	1	2	0	3	1	2	0	3	13
% 3 Axle Vehicles	0	0.4	0.5	0.4	0	0.3	0	0.2	0.7	0.2	0	0.2	0.2	0.2	0	0.2	0.2
4+ Axle Trucks	0	4	2	6	0	3	0	3	1	4	0	5	3	0	0	3	17
% 4+ Axle Trucks	0	0.4	1	0.4	0	0.4	0	0.3	0.7	0.4	0	0.4	0.6	0	0	0.2	0.3

	Alabama Street Southbound				Redlands Boulevard Westbound				Alabama Street Northbound				Redlands Boulevard Eastbound				
Start Time	Left	Thru	Right	App. Total	Left	Thru	Right	App. Total	Left	Thru	Right	App. Total	Left	Thru	Right	App. Total	Int. Total
Peak Hour Analysis From 04:00 PM to 05:45 PM - Peak 1 of 1																	
Peak Hour for Entire Intersection Begins at 05:00 PM																	
05:00 PM	36	102	22	160	12	82	41	135	12	129	13	154	62	124	12	198	647
05:15 PM	21	125	26	172	21	83	**48**	152	21	**139**	19	**179**	68	131	**31**	230	733
05:30 PM	30	**155**	**32**	**217**	**28**	**98**	30	**156**	9	128	**25**	162	**71**	**156**	20	**247**	**782**
05:45 PM	**39**	149	20	208	24	79	34	137	**23**	126	20	169	71	115	14	200	714
Total Volume	126	531	100	757	85	342	153	580	65	522	77	664	272	526	77	875	2876
% App. Total	16.6	70.1	13.2		14.7	59	26.4		9.8	78.6	11.6		31.1	60.1	8.8		
PHF	.808	.856	.781	.872	.759	.872	.797	.929	.707	.939	.770	.927	.958	.843	.621	.886	.919

Counts Unlimited Inc.
PO Box 1178
Corona, CA 92878
(951) 268-6268

City of Redlands
N/S: Alabama Street
E/W: Redlands Boulevard
Weather: Sunny

File Name : REDALREPM
Site Code : 00000093
Start Date : 2/9/2012
Page No : 2

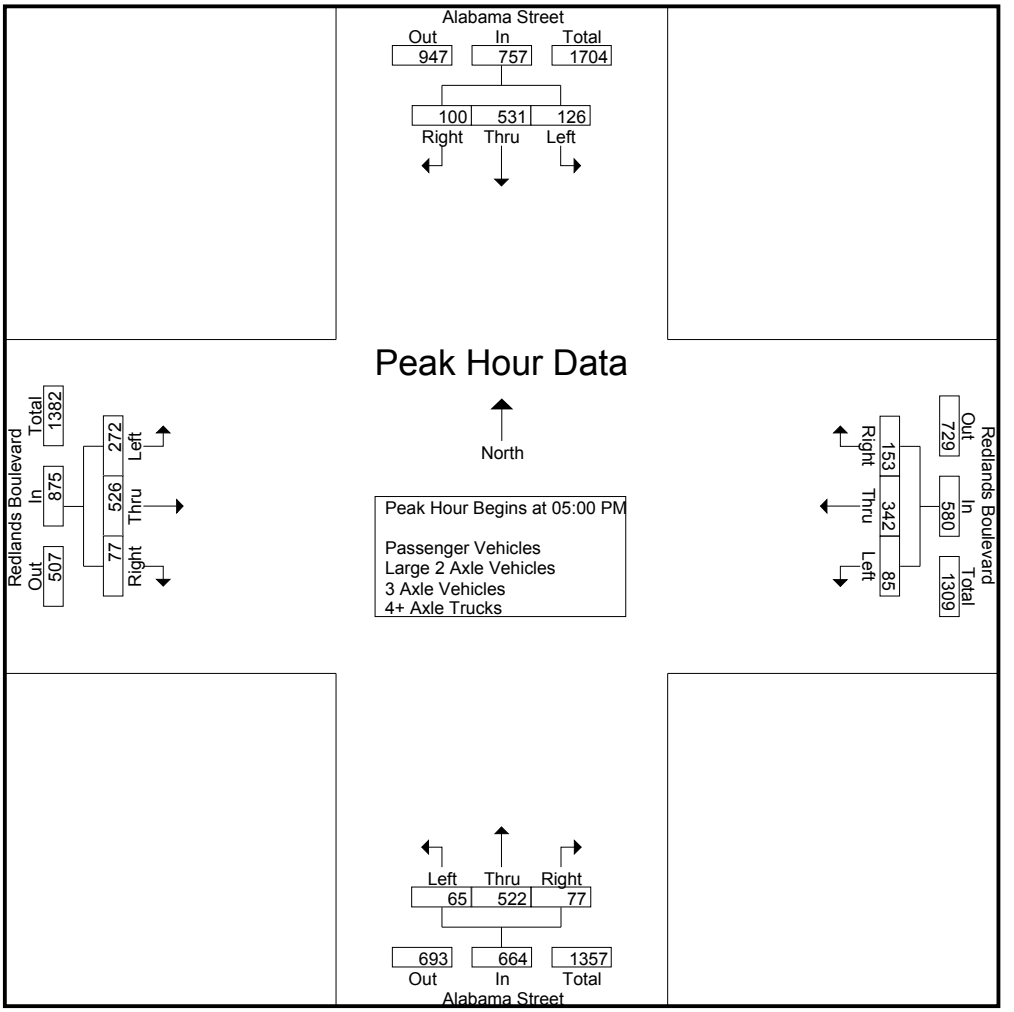

Peak Hour Analysis From 04:00 PM to 05:45 PM - Peak 1 of 1
Peak Hour for Each Approach Begins at:

	05:00 PM				05:00 PM				05:00 PM				05:00 PM			
+0 mins.	36	102	22	160	12	82	41	135	12	129	13	154	62	124	12	198
+15 mins.	21	125	26	172	21	83	**48**	152	21	**139**	19	**179**	68	131	**31**	230
+30 mins.	30	**155**	**32**	**217**	**28**	**98**	30	**156**	9	128	**25**	162	**71**	**156**	20	**247**
+45 mins.	**39**	149	20	208	24	79	34	137	**23**	126	20	169	71	115	14	200
Total Volume	126	531	100	757	85	342	153	580	65	522	77	664	272	526	77	875
% App. Total	16.6	70.1	13.2		14.7	59	26.4		9.8	78.6	11.6		31.1	60.1	8.8	
PHF	.808	.856	.781	.872	.759	.872	.797	.929	.707	.939	.770	.927	.958	.843	.621	.886

Counts Unlimited Inc.
PO Box 1178
Corona, CA 92878
(951) 268-6268

City of Redlands
N/S: Alabama Street
E/W: Redlands Boulevard
Weather: Sunny

File Name : REDALREPM
Site Code : 00000093
Start Date : 2/9/2012
Page No : 1

Groups Printed- Passenger Vehicles

	Alabama Street Southbound				Redlands Boulevard Westbound				Alabama Street Northbound				Redlands Boulevard Eastbound				
Start Time	Left	Thru	Right	App. Total	Left	Thru	Right	App. Total	Left	Thru	Right	App. Total	Left	Thru	Right	App. Total	Int. Total
04:00 PM	31	97	27	155	31	81	41	153	15	138	11	164	65	101	10	176	648
04:15 PM	29	104	22	155	24	92	41	157	27	135	12	174	55	105	13	173	659
04:30 PM	35	98	32	165	22	72	41	135	18	118	21	157	75	128	19	222	679
04:45 PM	39	110	20	169	13	81	25	119	12	116	16	144	59	115	19	193	625
Total	134	409	101	644	90	326	148	564	72	507	60	639	254	449	61	764	2611
05:00 PM	36	100	22	158	12	81	41	134	12	128	13	153	62	121	11	194	639
05:15 PM	20	125	26	171	20	83	48	151	20	139	19	178	67	131	31	229	729
05:30 PM	30	152	30	212	28	95	30	153	9	126	25	160	71	154	20	245	770
05:45 PM	39	146	20	205	24	77	34	135	23	124	20	167	71	115	14	200	707
Total	125	523	98	746	84	336	153	573	64	517	77	658	271	521	76	868	2845
Grand Total	259	932	199	1390	174	662	301	1137	136	1024	137	1297	525	970	137	1632	5456
Apprch %	18.6	67.1	14.3		15.3	58.2	26.5		10.5	79	10.6		32.2	59.4	8.4		
Total %	4.7	17.1	3.6	25.5	3.2	12.1	5.5	20.8	2.5	18.8	2.5	23.8	9.6	17.8	2.5	29.9	

	Alabama Street Southbound				Redlands Boulevard Westbound				Alabama Street Northbound				Redlands Boulevard Eastbound				
Start Time	Left	Thru	Right	App. Total	Left	Thru	Right	App. Total	Left	Thru	Right	App. Total	Left	Thru	Right	App. Total	Int. Total
Peak Hour Analysis From 05:00 PM to 05:45 PM - Peak 1 of 1																	
Peak Hour for Entire Intersection Begins at 05:00 PM																	
05:00 PM	36	100	22	158	12	81	41	134	12	128	13	153	62	121	11	194	639
05:15 PM	20	125	26	171	20	83	**48**	151	20	**139**	19	**178**	67	131	**31**	229	729
05:30 PM	30	**152**	**30**	**212**	**28**	**95**	30	**153**	9	126	**25**	160	**71**	**154**	20	**245**	**770**
05:45 PM	**39**	146	20	205	24	77	34	135	**23**	124	20	167	71	115	14	200	707
Total Volume	125	523	98	746	84	336	153	573	64	517	77	658	271	521	76	868	2845
% App. Total	16.8	70.1	13.1		14.7	58.6	26.7		9.7	78.6	11.7		31.2	60	8.8		
PHF	.801	.860	.817	.880	.750	.884	.797	.936	.696	.930	.770	.924	.954	.846	.613	.886	.924

Counts Unlimited Inc.
PO Box 1178
Corona, CA 92878
(951) 268-6268

City of Redlands
N/S: Alabama Street
E/W: Redlands Boulevard
Weather: Sunny

File Name : REDALREPM
Site Code : 00000093
Start Date : 2/9/2012
Page No : 2

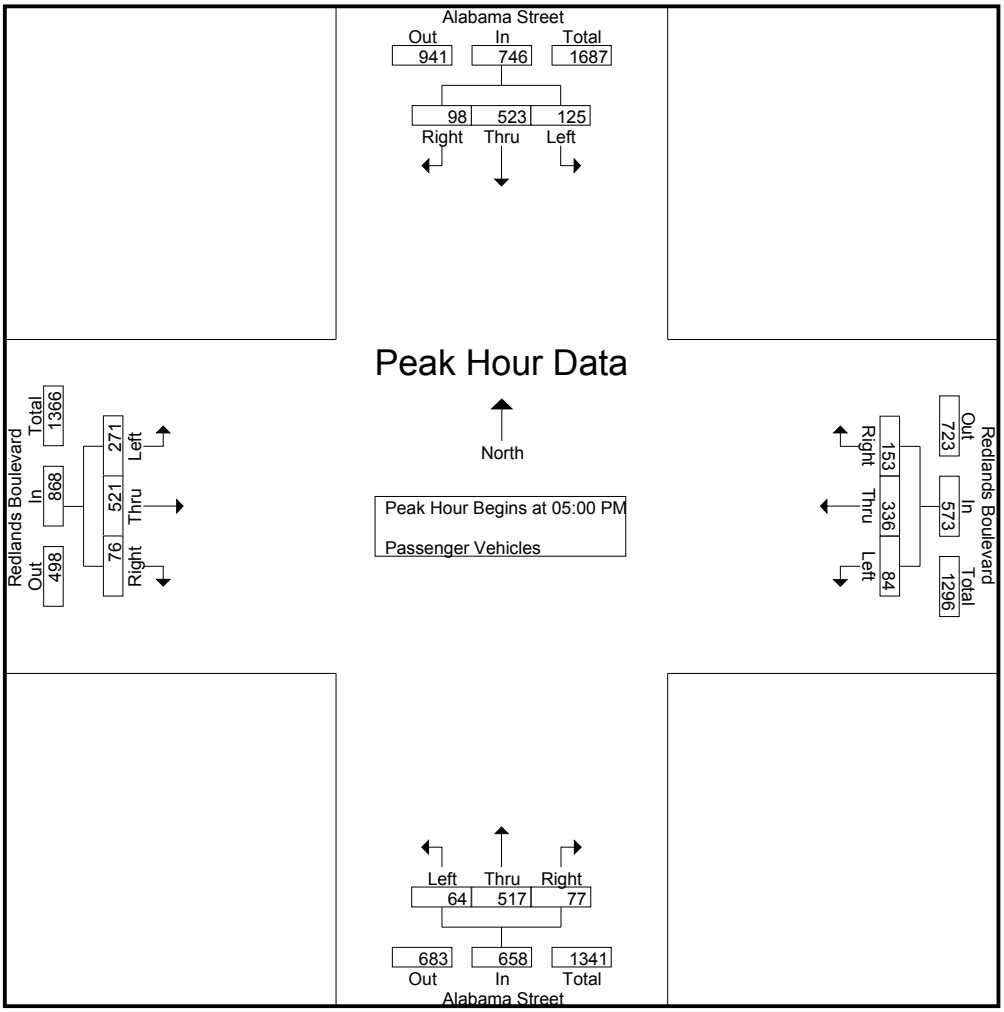

Peak Hour Analysis From 05:00 PM to 05:45 PM - Peak 1 of 1
Peak Hour for Each Approach Begins at:

	05:00 PM				05:00 PM				05:00 PM				05:00 PM			
+0 mins.	36	100	22	158	12	81	41	134	12	128	13	153	62	121	11	194
+15 mins.	20	125	26	171	20	83	**48**	151	20	**139**	19	**178**	67	131	**31**	229
+30 mins.	30	**152**	**30**	**212**	**28**	**95**	30	**153**	9	126	**25**	160	**71**	**154**	20	**245**
+45 mins.	**39**	146	20	205	24	77	34	135	**23**	124	20	167	71	115	14	200
Total Volume	125	523	98	746	84	336	153	573	64	517	77	658	271	521	76	868
% App. Total	16.8	70.1	13.1		14.7	58.6	26.7		9.7	78.6	11.7		31.2	60	8.8	
PHF	.801	.860	.817	.880	.750	.884	.797	.936	.696	.930	.770	.924	.954	.846	.613	.886

Counts Unlimited Inc.
PO Box 1178
Corona, CA 92878
(951) 268-6268

City of Redlands
N/S: Alabama Street
E/W: Redlands Boulevard
Weather: Sunny

File Name : REDALREPM
Site Code : 00000093
Start Date : 2/9/2012
Page No : 1

Groups Printed- Large 2 Axle Vehicles

	Alabama Street Southbound				Redlands Boulevard Westbound				Alabama Street Northbound				Redlands Boulevard Eastbound				
Start Time	Left	Thru	Right	App. Total	Left	Thru	Right	App. Total	Left	Thru	Right	App. Total	Left	Thru	Right	App. Total	Int. Total
04:00 PM	0	0	0	0	0	1	0	1	0	2	0	2	0	1	0	1	4
04:15 PM	0	0	0	0	0	0	1	1	0	3	0	3	0	2	0	2	6
04:30 PM	0	0	0	0	0	2	0	2	1	1	1	3	0	0	1	1	6
04:45 PM	0	0	0	0	1	0	1	2	1	1	0	2	0	0	0	0	4
Total	0	0	0	0	1	3	2	6	2	7	1	10	0	3	1	4	20
05:00 PM	0	1	0	1	0	1	0	1	0	1	0	1	0	1	1	2	5
05:15 PM	1	0	0	1	1	0	0	1	0	0	0	0	1	0	0	1	3
05:30 PM	0	2	0	2	0	2	0	2	0	1	0	1	0	2	0	2	7
05:45 PM	0	2	0	2	0	1	0	1	0	2	0	2	0	0	0	0	5
Total	1	5	0	6	1	4	0	5	0	4	0	4	1	3	1	5	20
Grand Total	1	5	0	6	2	7	2	11	2	11	1	14	1	6	2	9	40
Apprch %	16.7	83.3	0		18.2	63.6	18.2		14.3	78.6	7.1		11.1	66.7	22.2		
Total %	2.5	12.5	0	15	5	17.5	5	27.5	5	27.5	2.5	35	2.5	15	5	22.5	

	Alabama Street Southbound				Redlands Boulevard Westbound				Alabama Street Northbound				Redlands Boulevard Eastbound				
Start Time	Left	Thru	Right	App. Total	Left	Thru	Right	App. Total	Left	Thru	Right	App. Total	Left	Thru	Right	App. Total	Int. Total
Peak Hour Analysis From 05:00 PM to 05:45 PM - Peak 1 of 1																	
Peak Hour for Entire Intersection Begins at 05:00 PM																	
05:00 PM	0	1	0	1	0	1	0	1	0	1	0	1	0	1	**1**	**2**	5
05:15 PM	**1**	0	0	1	**1**	0	0	1	0	0	0	0	**1**	0	0	1	3
05:30 PM	0	**2**	0	**2**	0	**2**	0	**2**	0	1	0	1	0	**2**	0	2	**7**
05:45 PM	0	2	0	2	0	1	0	1	0	**2**	0	**2**	0	0	0	0	5
Total Volume	1	5	0	6	1	4	0	5	0	4	0	4	1	3	1	5	20
% App. Total	16.7	83.3	0		20	80	0		0	100	0		20	60	20		
PHF	.250	.625	.000	.750	.250	.500	.000	.625	.000	.500	.000	.500	.250	.375	.250	.625	.714

Counts Unlimited Inc.
PO Box 1178
Corona, CA 92878
(951) 268-6268

City of Redlands
N/S: Alabama Street
E/W: Redlands Boulevard
Weather: Sunny

File Name : REDALREPM
Site Code : 00000093
Start Date : 2/9/2012
Page No : 2

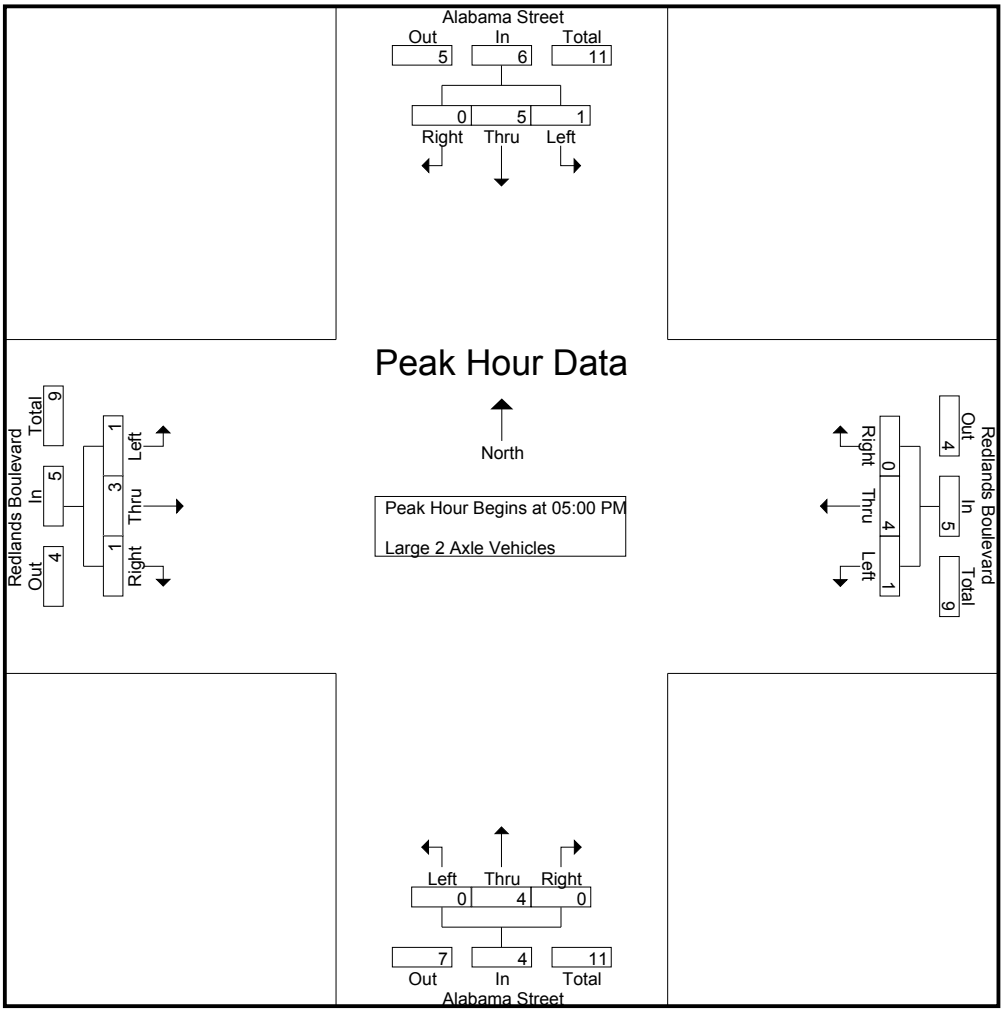

Peak Hour Analysis From 05:00 PM to 05:45 PM - Peak 1 of 1
Peak Hour for Each Approach Begins at:

	05:00 PM				05:00 PM				05:00 PM				05:00 PM			
+0 mins.	0	1	0	1	0	1	0	1	0	1	0	1	0	1	**1**	**2**
+15 mins.	**1**	0	0	1	**1**	0	0	1	0	0	0	0	**1**	0	0	1
+30 mins.	0	**2**	0	**2**	0	**2**	0	**2**	0	1	0	1	0	**2**	0	2
+45 mins.	0	2	0	2	0	1	0	1	0	**2**	0	**2**	0	0	0	0
Total Volume	1	5	0	6	1	4	0	5	0	4	0	4	1	3	1	5
% App. Total	16.7	83.3	0		20	80	0		0	100	0		20	60	20	
PHF	.250	.625	.000	.750	.250	.500	.000	.625	.000	.500	.000	.500	.250	.375	.250	.625

Counts Unlimited Inc.
PO Box 1178
Corona, CA 92878
(951) 268-6268

City of Redlands
N/S: Alabama Street
E/W: Redlands Boulevard
Weather: Sunny

File Name : REDALREPM
Site Code : 00000093
Start Date : 2/9/2012
Page No : 1

Groups Printed- 3 Axle Vehicles

	Alabama Street Southbound				Redlands Boulevard Westbound				Alabama Street Northbound				Redlands Boulevard Eastbound				
Start Time	Left	Thru	Right	App. Total	Left	Thru	Right	App. Total	Left	Thru	Right	App. Total	Left	Thru	Right	App. Total	Int. Total
04:00 PM	0	0	0	0	0	0	0	0	0	0	0	0	0	0	0	0	0
04:15 PM	0	0	0	0	0	0	0	0	0	0	0	0	0	0	0	0	0
04:30 PM	0	1	1	2	0	0	0	0	0	0	0	0	0	0	0	0	2
04:45 PM	0	0	0	0	0	1	0	1	1	1	0	2	1	0	0	1	4
Total	0	1	1	2	0	1	0	1	1	1	0	2	1	0	0	1	6
05:00 PM	0	1	0	1	0	0	0	0	0	0	0	0	0	2	0	2	3
05:15 PM	0	0	0	0	0	0	0	0	0	0	0	0	0	0	0	0	0
05:30 PM	0	1	0	1	0	0	0	0	0	1	0	1	0	0	0	0	2
05:45 PM	0	1	0	1	0	1	0	1	0	0	0	0	0	0	0	0	2
Total	0	3	0	3	0	1	0	1	0	1	0	1	0	2	0	2	7
Grand Total	0	4	1	5	0	2	0	2	1	2	0	3	1	2	0	3	13
Apprch %	0	80	20		0	100	0		33.3	66.7	0		33.3	66.7	0		
Total %	0	30.8	7.7	38.5	0	15.4	0	15.4	7.7	15.4	0	23.1	7.7	15.4	0	23.1	

	Alabama Street Southbound				Redlands Boulevard Westbound				Alabama Street Northbound				Redlands Boulevard Eastbound				
Start Time	Left	Thru	Right	App. Total	Left	Thru	Right	App. Total	Left	Thru	Right	App. Total	Left	Thru	Right	App. Total	Int. Total
Peak Hour Analysis From 05:00 PM to 05:45 PM - Peak 1 of 1																	
Peak Hour for Entire Intersection Begins at 05:00 PM																	
05:00 PM	0	**1**	0	**1**	0	0	0	0	0	0	0	0	0	**2**	0	**2**	**3**
05:15 PM	0	0	0	0	0	0	0	0	0	0	0	0	0	0	0	0	0
05:30 PM	0	1	0	1	0	0	0	0	0	**1**	0	**1**	0	0	0	0	2
05:45 PM	0	1	0	1	0	**1**	0	**1**	0	0	0	0	0	0	0	0	2
Total Volume	0	3	0	3	0	1	0	1	0	1	0	1	0	2	0	2	7
% App. Total	0	100	0		0	100	0		0	100	0		0	100	0		
PHF	.000	.750	.000	.750	.000	.250	.000	.250	.000	.250	.000	.250	.000	.250	.000	.250	.583

Counts Unlimited Inc.
PO Box 1178
Corona, CA 92878
(951) 268-6268

City of Redlands
N/S: Alabama Street
E/W: Redlands Boulevard
Weather: Sunny

File Name : REDALREPM
Site Code : 00000093
Start Date : 2/9/2012
Page No : 2

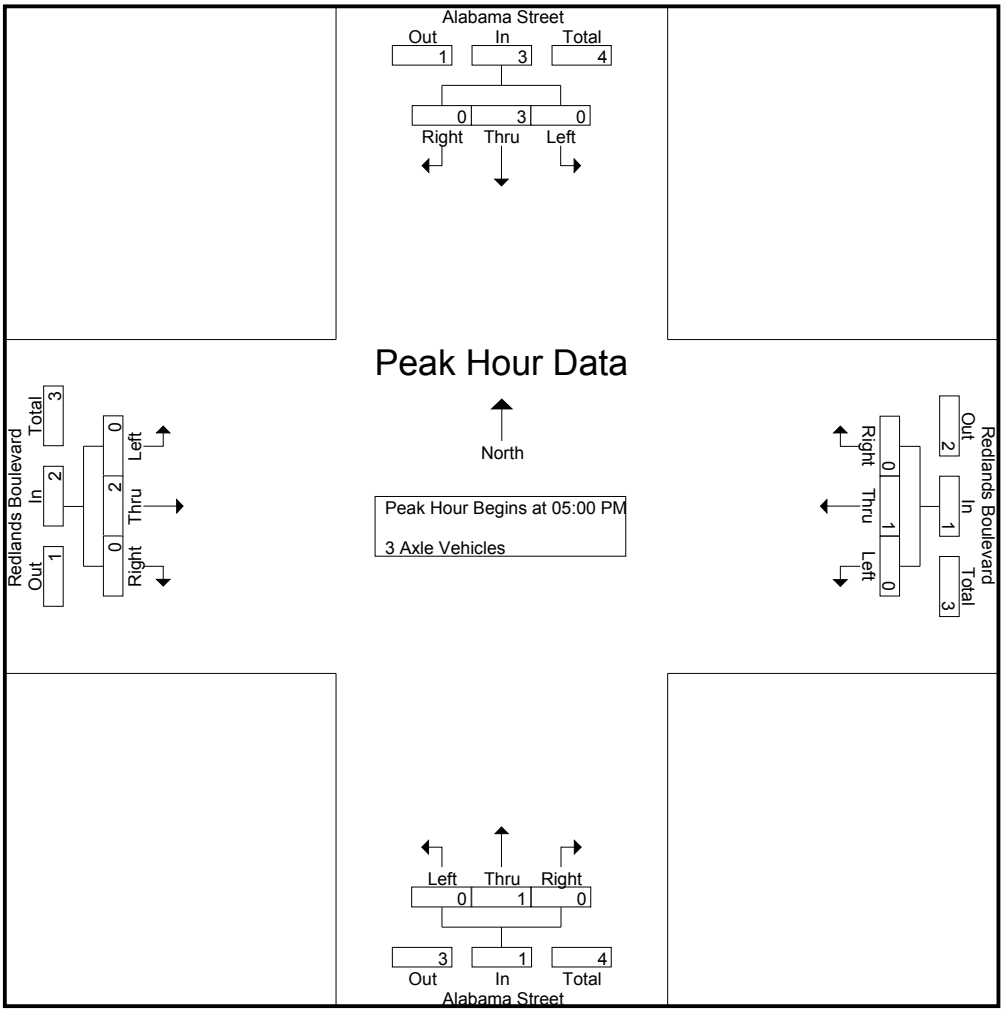

Peak Hour Analysis From 05:00 PM to 05:45 PM - Peak 1 of 1
Peak Hour for Each Approach Begins at:

	05:00 PM				05:00 PM				05:00 PM				05:00 PM			
+0 mins.	0	**1**	0	**1**	0	0	0	0	0	0	0	0	0	**2**	0	**2**
+15 mins.	0	0	0	0	0	0	0	0	0	0	0	0	0	0	0	0
+30 mins.	0	1	0	1	0	0	0	0	0	**1**	0	**1**	0	0	0	0
+45 mins.	0	1	0	1	0	**1**	0	**1**	0	0	0	0	0	0	0	0
Total Volume	0	3	0	3	0	1	0	1	0	1	0	1	0	2	0	2
% App. Total	0	100	0		0	100	0		0	100	0		0	100	0	
PHF	.000	.750	.000	.750	.000	.250	.000	.250	.000	.250	.000	.250	.000	.250	.000	.250

Counts Unlimited Inc.
PO Box 1178
Corona, CA 92878
(951) 268-6268

City of Redlands
N/S: Alabama Street
E/W: Redlands Boulevard
Weather: Sunny

File Name : REDALREPM
Site Code : 00000093
Start Date : 2/9/2012
Page No : 1

Groups Printed- 4+ Axle Trucks

	Alabama Street Southbound				Redlands Boulevard Westbound				Alabama Street Northbound				Redlands Boulevard Eastbound				
Start Time	Left	Thru	Right	App. Total	Left	Thru	Right	App. Total	Left	Thru	Right	App. Total	Left	Thru	Right	App. Total	Int. Total
04:00 PM	0	2	0	2	0	1	0	1	0	0	0	0	2	0	0	2	5
04:15 PM	0	2	0	2	0	0	0	0	0	2	0	2	1	0	0	1	5
04:30 PM	0	0	0	0	0	1	0	1	0	1	0	1	0	0	0	0	2
04:45 PM	0	0	0	0	0	0	0	0	0	1	0	1	0	0	0	0	1
Total	0	4	0	4	0	2	0	2	0	4	0	4	3	0	0	3	13
05:00 PM	0	0	0	0	0	0	0	0	0	0	0	0	0	0	0	0	0
05:15 PM	0	0	0	0	0	0	0	0	1	0	0	1	0	0	0	0	1
05:30 PM	0	0	2	2	0	1	0	1	0	0	0	0	0	0	0	0	3
05:45 PM	0	0	0	0	0	0	0	0	0	0	0	0	0	0	0	0	0
Total	0	0	2	2	0	1	0	1	1	0	0	1	0	0	0	0	4
Grand Total	0	4	2	6	0	3	0	3	1	4	0	5	3	0	0	3	17
Apprch %	0	66.7	33.3		0	100	0		20	80	0		100	0	0		
Total %	0	23.5	11.8	35.3	0	17.6	0	17.6	5.9	23.5	0	29.4	17.6	0	0	17.6	

	Alabama Street Southbound				Redlands Boulevard Westbound				Alabama Street Northbound				Redlands Boulevard Eastbound				
Start Time	Left	Thru	Right	App. Total	Left	Thru	Right	App. Total	Left	Thru	Right	App. Total	Left	Thru	Right	App. Total	Int. Total
Peak Hour Analysis From 05:00 PM to 05:45 PM - Peak 1 of 1																	
Peak Hour for Entire Intersection Begins at 05:00 PM																	
05:00 PM	0	0	0	0	0	0	0	0	0	0	0	0	0	0	0	0	0
05:15 PM	0	0	0	0	0	0	0	0	**1**	0	0	**1**	0	0	0	0	1
05:30 PM	0	0	**2**	**2**	0	**1**	0	**1**	0	0	0	0	0	0	0	0	**3**
05:45 PM	0	0	0	0	0	0	0	0	0	0	0	0	0	0	0	0	0
Total Volume	0	0	2	2	0	1	0	1	1	0	0	1	0	0	0	0	4
% App. Total	0	0	100		0	100	0		100	0	0		0	0	0		
PHF	.000	.000	.250	.250	.000	.250	.000	.250	.250	.000	.000	.250	.000	.000	.000	.000	.333

Counts Unlimited Inc.
PO Box 1178
Corona, CA 92878
(951) 268-6268

City of Redlands
N/S: Alabama Street
E/W: Redlands Boulevard
Weather: Sunny

File Name : REDALREPM
Site Code : 00000093
Start Date : 2/9/2012
Page No : 2

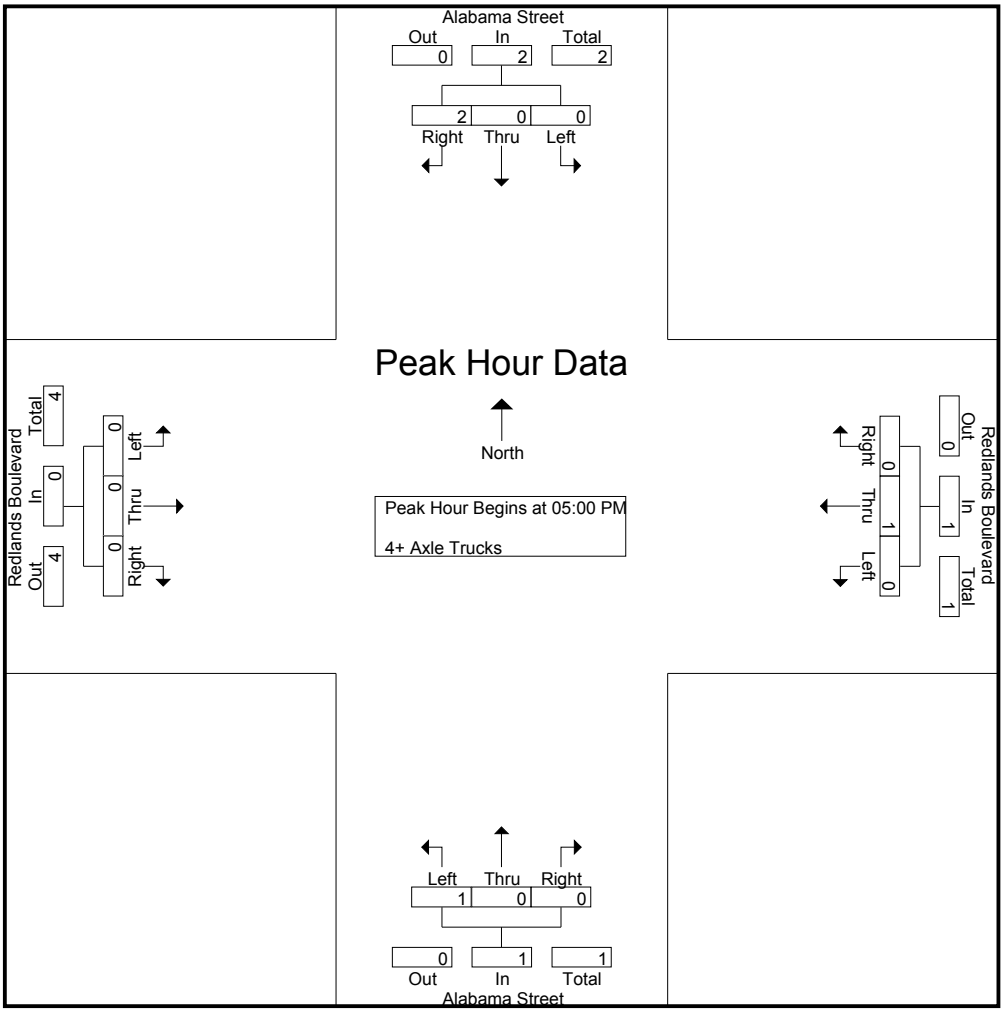

Peak Hour Analysis From 05:00 PM to 05:45 PM - Peak 1 of 1
Peak Hour for Each Approach Begins at:

	05:00 PM				05:00 PM				05:00 PM				05:00 PM			
+0 mins.	0	0	0	0	0	0	0	0	0	0	0	0	0	0	0	0
+15 mins.	0	0	0	0	0	0	0	0	**1**	0	0	**1**	0	0	0	0
+30 mins.	0	0	**2**	**2**	0	**1**	0	**1**	0	0	0	0	0	0	0	0
+45 mins.	0	0	0	0	0	0	0	0	0	0	0	0	0	0	0	0
Total Volume	0	0	2	2	0	1	0	1	1	0	0	1	0	0	0	0
% App. Total	0	0	100		0	100	0		100	0	0		0	0	0	
PHF	.000	.000	.250	.250	.000	.250	.000	.250	.250	.000	.000	.250	.000	.000	.000	.000

APPENDIX 3.2

Existing (2012) Conditions
Volume Development Worksheets

Volume Development - AM Peak Hour

1: California Street / Lugonia Avenue

PHF: 0.919
Date: 2/9/2012

	NBL	NBT	NBR	SBL	SBT	SBR	EBL	EBT	EBR	WBL	WBT	WBR	TOTAL
Total:	176	293	123	13	137	9	2	9	29	37	68	23	919
2-Axle:	3	8	0	0	5	0	0	1	1	0	0	2	20
2-PCE:	5	12	0	0	8	0	0	2	2	0	0	3	30
3-Axle:	2	6	0	0	3	0	0	0	2	0	0	1	14
3-PCE:	4	12	0	0	6	0	0	0	4	0	0	2	28
4-Axle:	5	27	0	0	29	0	0	0	3	0	0	1	65
4-PCE:	15	81	0	0	87	0	0	0	9	0	0	3	195
2012:	190	357	123	13	201	9	2	10	38	37	68	27	1,073

2: Nevada Street / Lugonia Avenue

PHF: 0.810
Date: 2/9/2012

	NBL	NBT	NBR	SBL	SBT	SBR	EBL	EBT	EBR	WBL	WBT	WBR	TOTAL
Total:	33	78	26	8	121	13	12	50	30	88	120	11	590
2-Axle:	0	1	0	0	1	0	0	0	0	1	0	0	3
2-PCE:	0	2	0	0	2	0	0	0	0	2	0	0	5
3-Axle:	1	1	0	0	0	0	0	0	0	0	0	0	2
3-PCE:	2	2	0	0	0	0	0	0	0	0	0	0	4
4-Axle:	0	1	0	0	0	0	0	0	0	0	0	0	1
4-PCE:	0	3	0	0	0	0	0	0	0	0	0	0	3
2012:	34	82	26	8	122	13	12	50	30	89	120	11	596

3: Driveway 1 / Lugonia Avenue

	NBL	NBT	NBR	SBL	SBT	SBR	EBL	EBT	EBR	WBL	WBT	WBR	TOTAL
2012:	0	0	0	0	0	0	0	84	0	0	220	0	304

4: Driveway 2 / Lugonia Avenue

	NBL	NBT	NBR	SBL	SBT	SBR	EBL	EBT	EBR	WBL	WBT	WBR	TOTAL
2012:	0	0	0	0	0	0	0	84	0	0	220	0	304

5: Alabama Street / Lugonia Avenue

PHF: 0.897
Date: 2/9/2012

	NBL	NBT	NBR	SBL	SBT	SBR	EBL	EBT	EBR	WBL	WBT	WBR	TOTAL
Total:	86	244	133	35	310	56	42	79	34	157	199	28	1,403
2-Axle:	1	4	4	4	0	1	0	1	0	1	1	4	21
2-PCE:	2	6	6	6	0	2	0	2	0	2	2	6	32
3-Axle:	0	4	2	0	1	0	0	0	1	1	1	0	10
3-PCE:	0	8	4	0	2	0	0	0	2	2	2	0	20
4-Axle:	0	17	2	3	12	0	0	0	0	0	1	0	35
4-PCE:	0	51	6	9	36	0	0	0	0	0	3	0	105
2012:	87	284	141	43	335	57	42	80	35	159	203	30	1,494

Volume Development - AM Peak Hour

6: Alabama Street / I-10 Westbound Ramps

PHF: 0.915
Date: 2/9/2012

	NBL	NBT	NBR	SBL	SBT	SBR	EBL	EBT	EBR	WBL	WBT	WBR	TOTAL
Total:	336	410	0	0	320	129	0	0	0	241	287	249	1,972
2-Axle:	8	11	0	0	4	2	0	0	0	1	5	1	32
2-PCE:	12	17	0	0	6	3	0	0	0	2	8	2	48
3-Axle:	1	6	0	0	2	2	0	0	0	0	1	0	12
3-PCE:	2	12	0	0	4	4	0	0	0	0	2	0	24
4-Axle:	3	18	0	0	5	12	0	0	0	1	2	6	47
4-PCE:	9	54	0	0	15	36	0	0	0	3	6	18	141
2012:	347	458	0	0	334	156	0	0	0	244	295	262	2,094

7: Alabama Street / I-10 Eastbound Ramps

PHF: 0.940
Date: 2/9/2012

	NBL	NBT	NBR	SBL	SBT	SBR	EBL	EBT	EBR	WBL	WBT	WBR	TOTAL
Total:	0	555	114	43	508	0	181	1	351	0	0	0	1,753
2-Axle:	0	16	5	2	3	0	5	0	11	0	0	0	42
2-PCE:	0	24	8	3	5	0	8	0	17	0	0	0	63
3-Axle:	0	3	0	0	4	0	4	0	2	0	0	0	13
3-PCE:	0	6	0	0	8	0	8	0	4	0	0	0	26
4-Axle:	0	9	3	0	4	0	12	0	7	0	0	0	35
4-PCE:	0	27	9	0	12	0	36	0	21	0	0	0	105
2012:	0	593	123	49	547	0	212	1	373	0	0	0	1,896

8: Alabama Street / Redlands Boulevard

PHF: 0.896
Date: 2/9/2012

	NBL	NBT	NBR	SBL	SBT	SBR	EBL	EBT	EBR	WBL	WBT	WBR	TOTAL
Total:	67	436	40	82	445	150	96	158	26	42	275	90	1,907
2-Axle:	3	7	0	0	4	4	8	8	2	2	6	1	45
2-PCE:	5	11	0	0	6	6	12	12	3	3	9	2	68
3-Axle:	0	4	0	0	4	2	0	0	1	0	0	2	13
3-PCE:	0	8	0	0	8	4	0	0	2	0	0	4	26
4-Axle:	0	8	0	1	4	3	3	1	1	0	0	0	21
4-PCE:	0	24	0	3	12	9	9	3	3	0	0	0	63
2012:	69	460	40	84	459	160	106	164	30	43	278	93	1,985

Volume Development - PM Peak Hour

1: California Street / Lugonia Avenue

12 PHF: 0.872
Date: 2/9/2012

	NBL	NBT	NBR	SBL	SBT	SBR	EBL	EBT	EBR	WBL	WBT	WBR	TOTAL
Total:	62	194	124	31	403	5	3	42	165	155	35	30	1,249
2-Axle:	1	5	0	0	1	1	0	3	1	3	5	0	20
2-PCE:	2	8	0	0	2	2	0	5	2	5	8	0	30
3-Axle:	1	5	0	1	6	1	1	0	0	0	0	0	15
3-PCE:	2	10	0	2	12	2	2	0	0	0	0	0	30
4-Axle:	1	19	0	0	27	0	0	0	0	0	0	0	47
4-PCE:	3	57	0	0	81	0	0	0	0	0	0	0	141
2012:	66	240	124	32	464	7	4	44	166	157	38	30	1,368

2: Nevada Street / Lugonia Avenue

12 PHF: 0.846
Date: 2/9/2012

	NBL	NBT	NBR	SBL	SBT	SBR	EBL	EBT	EBR	WBL	WBT	WBR	TOTAL
Total:	17	166	167	21	131	4	23	190	45	119	154	9	1,046
2-Axle:	2	2	0	0	2	1	0	1	1	0	1	0	10
2-PCE:	3	3	0	0	3	2	0	2	2	0	2	0	15
3-Axle:	0	0	0	0	0	0	0	0	1	0	0	0	1
3-PCE:	0	0	0	0	0	0	0	0	2	0	0	0	2
4-Axle:	0	0	0	0	0	0	0	0	0	0	0	0	0
4-PCE:	0	0	0	0	0	0	0	0	0	0	0	0	0
2012:	18	167	167	21	132	5	23	191	47	119	155	9	1,052

3: Driveway 1 / Lugonia Avenue

	NBL	NBT	NBR	SBL	SBT	SBR	EBL	EBT	EBR	WBL	WBT	WBR	TOTAL
2012:	0	0	0	0	0	0	0	379	0	0	283	0	661

4: Driveway 2 / Lugonia Avenue

	NBL	NBT	NBR	SBL	SBT	SBR	EBL	EBT	EBR	WBL	WBT	WBR	TOTAL
2012:	0	0	0	0	0	0	0	379	0	0	283	0	661

5: Alabama Street / Lugonia Avenue

12 PHF: 0.973
Date: 2/9/2012

	NBL	NBT	NBR	SBL	SBT	SBR	EBL	EBT	EBR	WBL	WBT	WBR	TOTAL
Total:	116	583	369	133	447	21	129	308	70	338	262	41	2,817
2-Axle:	0	0	2	2	1	0	1	1	0	1	2	2	12
2-PCE:	0	0	3	3	2	0	2	2	0	2	3	3	18
3-Axle:	0	0	0	0	1	0	0	0	0	1	0	0	2
3-PCE:	0	0	0	0	2	0	0	0	0	2	0	0	4
4-Axle:	0	5	0	0	13	0	0	0	0	1	0	0	19
4-PCE:	0	15	0	0	39	0	0	0	0	3	0	0	57
2012:	116	593	370	134	475	21	130	309	70	342	263	42	2,863

Volume Development - PM Peak Hour

6: Alabama Street / I-10 Westbound Ramps

12 PHF: 0.970
Date: 2/9/2012

	NBL	NBT	NBR	SBL	SBT	SBR	EBL	EBT	EBR	WBL	WBT	WBR	TOTAL
Total:	368	1,086	0	0	759	284	0	0	0	164	310	156	3,127
2-Axle:	4	2	0	0	3	3	0	0	0	0	3	0	15
2-PCE:	6	3	0	0	5	5	0	0	0	0	5	0	23
3-Axle:	0	6	0	0	0	3	0	0	0	0	0	0	9
3-PCE:	0	12	0	0	0	6	0	0	0	0	0	0	18
4-Axle:	3	6	0	0	2	9	0	0	0	0	2	5	27
4-PCE:	9	18	0	0	6	27	0	0	0	0	6	15	81
2012:	376	1,105	0	0	765	307	0	0	0	164	316	166	3,198

7: Alabama Street / I-10 Eastbound Ramps

12 PHF: 0.989
Date: 2/9/2012

	NBL	NBT	NBR	SBL	SBT	SBR	EBL	EBT	EBR	WBL	WBT	WBR	TOTAL
Total:	0	963	269	211	710	0	428	4	418	0	0	0	3,003
2-Axle:	0	5	0	0	1	0	1	0	5	0	0	0	12
2-PCE:	0	8	0	0	2	0	2	0	8	0	0	0	18
3-Axle:	0	2	0	0	0	0	0	0	1	0	0	0	3
3-PCE:	0	4	0	0	0	0	0	0	2	0	0	0	6
4-Axle:	0	1	0	0	1	0	4	0	0	0	0	0	6
4-PCE:	0	3	0	0	3	0	12	0	0	0	0	0	18
2012:	0	1,021	269	211	720	0	460	4	422	0	0	0	3,105

8: Alabama Street / Redlands Boulevard

12 PHF: 0.919
Date: 2/9/2012

	NBL	NBT	NBR	SBL	SBT	SBR	EBL	EBT	EBR	WBL	WBT	WBR	TOTAL
Total:	65	522	77	126	531	100	272	526	77	85	342	153	2,876
2-Axle:	0	4	0	1	5	0	1	3	1	1	4	0	20
2-PCE:	0	6	0	2	8	0	2	5	2	2	6	0	30
3-Axle:	0	1	0	0	3	0	0	2	0	0	1	0	7
3-PCE:	0	2	0	0	6	0	0	4	0	0	2	0	14
4-Axle:	1	0	0	0	0	2	0	0	0	0	1	0	4
4-PCE:	3	0	0	0	0	6	0	0	0	0	3	0	12
2012:	67	525	77	127	537	104	273	530	78	86	347	153	2,901

EXISTING (2012) FLOW CONSERVATION

Alabama Street / I-10 Westbound Ramps

Adj.		⇩	1,072	#DIV/0!	PM						PM	#DIV/0!	1,271	⇧	DATE	2/9
	Flow	⇩	490	#DIV/0!	AM						AM	#DIV/0!	720	⇧	Flow	
⇦	⇦	Origin	ADT	0	PM		307	765	0		PM		ADT	Origin	⇦	⇦
999	798	ADT			AM		156	334	0		AM			ADT	819	648
#DIV/0!	#DIV/0!	0			PM		307	765	0		PM				#DIV/0!	#DIV/0!
PM	AM	PM	AM	PM	AM		156	334	0		AM	PM	AM	PM	AM	PM
							⇦	⇩	⇨							
		0	0	0	0	⇧		SB		⇧	262	166	262	166		
		0	0	0	0	⇨	EB	6	WB	⇦	295	316	295	316		
		0	0	0	0	⇩		NB		⇩	262	166	262	166		
							⇦	⇧	⇨							
PM	AM	PM	AM	PM	AM		347	458	0		AM	PM	AM	PM	AM	PM
#DIV/0!	#DIV/0!				PM		376	1,105	0		PM			0	#DIV/0!	#DIV/0!
0	0	ADT			AM		347	458	0		AM			ADT	0	0
⇨	⇨	Origin	ADT	0	PM		376	1,105	0		PM		ADT	Origin	⇨	⇨
	Flow	⇩	596	#DIV/0!	AM						AM	#DIV/0!	805	⇧	Flow	
Adj.		⇩	931	#DIV/0!	PM						PM	#DIV/0!	1,481	⇧		Adj.

Alabama Street / I-10 Eastbound Ramps

Adj.		⇩	931	#DIV/0!	PM			7			PM	#DIV/0!	1,481	⇧	DATE	2/9
	Flow	⇩	596	#DIV/0!	AM			25	5		AM	#DIV/0!	805	⇧	Flow	
⇦	⇦	Origin	ADT	0	PM		0	713	211		PM		ADT	Origin	⇦	⇦
0	0	ADT			AM		0	522	44		AM			ADT	0	0
#DIV/0!	#DIV/0!	0			PM		0	720	211		PM				#DIV/0!	#DIV/0!
PM	AM	PM	AM	PM	AM		0	547	49		AM	PM	AM	PM	AM	PM
							⇦	⇩	⇨							
23		437	212	460	212	⇧		SB		⇧	0	0	0	0		
		4	1	4	1	⇨	EB	7	WB	⇦	0	0	0	0		
		422	373	422	373	⇩		NB		⇩	0	0	0	0		
							⇦	⇧	⇨							
PM	AM	PM	AM	PM	AM		0	593	123		AM	PM	AM	PM	AM	PM
#DIV/0!	#DIV/0!				PM		0	1,021	269		PM			0	#DIV/0!	#DIV/0!
886	586	ADT			AM		0	584	123		AM			ADT	173	484
⇨	⇨	Origin	ADT	0	PM		0	970	269		PM		ADT	Origin	⇨	⇨
	Flow	⇩	920	#DIV/0!	AM			9			AM	#DIV/0!	716	⇧	Flow	
Adj.		⇩	1,142	#DIV/0!	PM			51			PM	#DIV/0!	1,290	⇧		Adj.

This Page Intentionally Left Blank

APPENDIX 3.3

Existing (2012) Conditions
Intersection Operations Analysis Worksheets

UNIVERISTY CROSSINGS APARTMENTS TRAFFIC IMPACT ANALYSIS (JN 08139)
Existing 2012 Conditions
AM PEAK HOUR

Level Of Service Computation Report
2000 HCM Operations Method (Base Volume Alternative)

Intersection #1 California Street / Lugonia Avenue

Cycle (sec):	80	Critical Vol./Cap.(X):	0.333
Loss Time (sec):	6	Average Delay (sec/veh):	19.9
Optimal Cycle: OPTIMIZED		Level Of Service:	B

Approach:	North Bound			South Bound			East Bound			West Bound		
Movement:	L -	T -	R	L -	T -	R	L -	T -	R	L -	T -	R
Control:	Permitted			Permitted			Split Phase			Split Phase		
Rights:	Include			Include			Include			Include		
Min. Green:	10	10	10	28	28	28	30	30	30	10	10	10
Y+R:	4.0	4.0	4.0	4.0	4.0	4.0	4.0	4.0	4.0	4.0	4.0	4.0
Lanes:	1 0	1 0	1	1 0	2 0	1	0 1	0 0	1	0 0	1! 0	0
Volume Module:												
Base Vol:	190	357	123	13	201	9	2	10	38	37	68	27
Growth Adj:	1.00	1.00	1.00	1.00	1.00	1.00	1.00	1.00	1.00	1.00	1.00	1.00
Initial Bse:	190	357	123	13	201	9	2	10	38	37	68	27
User Adj:	1.00	1.00	1.00	1.00	1.00	1.00	1.00	1.00	1.00	1.00	1.00	1.00
PHF Adj:	0.92	0.92	0.92	0.92	0.92	0.92	0.92	0.92	0.92	0.92	0.92	0.92
PHF Volume:	207	388	134	14	219	10	2	11	41	40	74	29
Reduct Vol:	0	0	0	0	0	0	0	0	0	0	0	0
Reduced Vol:	207	388	134	14	219	10	2	11	41	40	74	29
PCE Adj:	1.00	1.00	1.00	1.00	1.00	1.00	1.00	1.00	1.00	1.00	1.00	1.00
MLF Adj:	1.00	1.00	1.00	1.00	1.00	1.00	1.00	1.00	1.00	1.00	1.00	1.00
FinalVolume:	207	388	134	14	219	10	2	11	41	40	74	29
Saturation Flow Module:												
Sat/Lane:	1800	1800	1800	1800	1800	1800	1800	1800	1800	1800	1800	1800
Adjustment:	0.56	1.00	0.85	0.32	1.00	0.85	0.94	0.99	0.85	0.91	0.96	0.96
Lanes:	1.00	1.00	1.00	1.00	2.00	1.00	0.17	0.83	1.00	0.29	0.51	0.20
Final Sat.:	1006	1800	1530	580	3600	1530	295	1474	1530	476	874	347
Capacity Analysis Module:												
Vol/Sat:	0.21	0.22	0.09	0.02	0.06	0.01	0.01	0.01	0.03	0.08	0.08	0.08
Crit Moves:		****						****			****	
Green/Cycle:	0.40	0.40	0.40	0.40	0.40	0.40	0.38	0.38	0.38	0.15	0.15	0.15
Volume/Cap:	0.52	0.55	0.22	0.06	0.15	0.02	0.02	0.02	0.07	0.55	0.55	0.55
Delay/Veh:	19.7	19.6	16.2	15.1	15.6	14.7	15.8	15.8	16.1	33.6	33.6	33.6
User DelAdj:	1.00	1.00	1.00	1.00	1.00	1.00	1.00	1.00	1.00	1.00	1.00	1.00
AdjDel/Veh:	19.7	19.6	16.2	15.1	15.6	14.7	15.8	15.8	16.1	33.6	33.6	33.6
LOS by Move:	B	B	B	B	B	B	B	B	B	C	C	C
HCM2kAvgQ:	5	8	2	0	2	0	0	0	1	4	4	4

Note: Queue reported is the number of cars per lane.

Traffix 8.0.0715 (c) 2008 Dowling Assoc. Licensed to URBAN CROSSROADS, IRVINE

UNIVERISTY CROSSINGS APARTMENTS TRAFFIC IMPACT ANALYSIS (JN 08139)
Existing 2012 Conditions
AM PEAK HOUR

Level Of Service Computation Report
2000 HCM 4-Way Stop Method (Base Volume Alternative)

Intersection #2 Nevada Street / Lugonia Avenue

Cycle (sec):	0	Critical Vol./Cap.(X):	0.446
Loss Time (sec):	0	Average Delay (sec/veh):	11.2
Optimal Cycle:	0	Level Of Service:	B

Approach:	North Bound			South Bound			East Bound			West Bound		
Movement:	L -	T -	R	L -	T -	R	L -	T -	R	L -	T -	R
Control:	Stop Sign			Stop Sign			Stop Sign			Stop Sign		
Rights:	Include			Include			Include			Include		
Min. Green:	0	0	0	0	0	0	0	0	0	0	0	0
Lanes:	0 1	0 0	1	0 0	1! 0	0	0 1	0 0	1	0 0	1! 0	0
Volume Module:												
Base Vol:	34	82	26	8	122	13	12	50	30	89	120	11
Growth Adj:	1.00	1.00	1.00	1.00	1.00	1.00	1.00	1.00	1.00	1.00	1.00	1.00
Initial Bse:	34	82	26	8	122	13	12	50	30	89	120	11
User Adj:	1.00	1.00	1.00	1.00	1.00	1.00	1.00	1.00	1.00	1.00	1.00	1.00
PHF Adj:	0.81	0.81	0.81	0.81	0.81	0.81	0.81	0.81	0.81	0.81	0.81	0.81
PHF Volume:	42	101	32	10	151	16	15	62	37	110	148	14
Reduct Vol:	0	0	0	0	0	0	0	0	0	0	0	0
Reduced Vol:	42	101	32	10	151	16	15	62	37	110	148	14
PCE Adj:	1.00	1.00	1.00	1.00	1.00	1.00	1.00	1.00	1.00	1.00	1.00	1.00
MLF Adj:	1.00	1.00	1.00	1.00	1.00	1.00	1.00	1.00	1.00	1.00	1.00	1.00
FinalVolume:	42	101	32	10	151	16	15	62	37	110	148	14
Saturation Flow Module:												
Adjustment:	1.00	1.00	1.00	1.00	1.00	1.00	1.00	1.00	1.00	1.00	1.00	1.00
Lanes:	0.29	0.71	1.00	0.06	0.85	0.09	0.19	0.81	1.00	0.40	0.55	0.05
Final Sat.:	168	405	662	33	502	54	111	461	653	247	332	30
Capacity Analysis Module:												
Vol/Sat:	0.25	0.25	0.05	0.30	0.30	0.30	0.13	0.13	0.06	0.45	0.45	0.45
Crit Moves:	****			****			****			****		
Delay/Veh:	10.5	10.5	8.0	11.1	11.1	11.1	9.5	9.5	8.1	12.9	12.9	12.9
Delay Adj:	1.00	1.00	1.00	1.00	1.00	1.00	1.00	1.00	1.00	1.00	1.00	1.00
AdjDel/Veh:	10.5	10.5	8.0	11.1	11.1	11.1	9.5	9.5	8.1	12.9	12.9	12.9
LOS by Move:	B	B	A	B	B	B	A	A	A	B	B	B
ApproachDel:	10.0			11.1			9.0			12.9		
Delay Adj:	1.00			1.00			1.00			1.00		
ApprAdjDel:	10.0			11.1			9.0			12.9		
LOS by Appr:	B			B			A			B		
AllWayAvgQ:	0.3	0.3	0.0	0.4	0.4	0.4	0.1	0.1	0.1	0.7	0.7	0.7

Note: Queue reported is the number of cars per lane.

Traffix 8.0.0715 (c) 2008 Dowling Assoc. Licensed to URBAN CROSSROADS, IRVINE

UNIVERISTY CROSSINGS APARTMENTS TRAFFIC IMPACT ANALYSIS (JN 08139)
Existing 2012 Conditions
AM PEAK HOUR

Level Of Service Computation Report
2000 HCM Operations Method (Base Volume Alternative)

Intersection #5 Alabama Street / Lugonia Avenue

Cycle (sec): 75 Critical Vol./Cap.(X): 0.309
Loss Time (sec): 8 Average Delay (sec/veh): 23.2
Optimal Cycle: OPTIMIZED Level Of Service: C

Approach:	North Bound			South Bound			East Bound			West Bound		
Movement:	L - T - R			L - T - R			L - T - R			L - T - R		
Control:	Protected			Protected			Protected			Protected		
Rights:	Include			Include			Include			Include		
Min. Green:	10	20	20	10	20	20	10	24	24	10	24	24
Y+R:	4.0	4.0	4.0	4.0	4.0	4.0	4.0	4.0	4.0	4.0	4.0	4.0
Lanes:	1 0	2 0	1	1 0	3 0	1	1 0	1 1	0	1 0	2 0	1
Volume Module:												
Base Vol:	87	284	141	43	335	57	42	80	35	159	203	30
Growth Adj:	1.00	1.00	1.00	1.00	1.00	1.00	1.00	1.00	1.00	1.00	1.00	1.00
Initial Bse:	87	284	141	43	335	57	42	80	35	159	203	30
User Adj:	1.00	1.00	1.00	1.00	1.00	1.00	1.00	1.00	1.00	1.00	1.00	1.00
PHF Adj:	0.90	0.90	0.90	0.90	0.90	0.90	0.90	0.90	0.90	0.90	0.90	0.90
PHF Volume:	97	317	157	48	373	64	47	89	39	177	226	33
Reduct Vol:	0	0	0	0	0	0	0	0	0	0	0	0
Reduced Vol:	97	317	157	48	373	64	47	89	39	177	226	33
PCE Adj:	1.00	1.00	1.00	1.00	1.00	1.00	1.00	1.00	1.00	1.00	1.00	1.00
MLF Adj:	1.00	1.00	1.00	1.00	1.00	1.00	1.00	1.00	1.00	1.00	1.00	1.00
FinalVolume:	97	317	157	48	373	64	47	89	39	177	226	33
Saturation Flow Module:												
Sat/Lane:	1800	1800	1800	1800	1800	1800	1800	1800	1800	1800	1800	1800
Adjustment:	0.90	1.00	0.85	0.90	1.00	0.85	0.90	0.95	0.95	0.90	1.00	0.85
Lanes:	1.00	2.00	1.00	1.00	3.00	1.00	1.00	1.39	0.61	1.00	2.00	1.00
Final Sat.:	1615	3600	1530	1615	5400	1530	1615	2389	1045	1615	3600	1530
Capacity Analysis Module:												
Vol/Sat:	0.06	0.09	0.10	0.03	0.07	0.04	0.03	0.04	0.04	0.11	0.06	0.02
Crit Moves:	****				****			****		****		
Green/Cycle:	0.13	0.27	0.27	0.13	0.27	0.27	0.15	0.32	0.32	0.17	0.35	0.35
Volume/Cap:	0.45	0.33	0.39	0.22	0.26	0.16	0.20	0.12	0.12	0.63	0.18	0.06
Delay/Veh:	31.5	22.3	23.1	29.6	21.8	21.2	28.6	18.1	18.1	33.5	17.1	16.3
User DelAdj:	1.00	1.00	1.00	1.00	1.00	1.00	1.00	1.00	1.00	1.00	1.00	1.00
AdjDel/Veh:	31.5	22.3	23.1	29.6	21.8	21.2	28.6	18.1	18.1	33.5	17.1	16.3
LOS by Move:	C	C	C	C	C	C	C	B	B	C	B	B
HCM2kAvgQ:	3	3	3	1	2	1	1	1	1	5	2	1

Note: Queue reported is the number of cars per lane.

Traffix 8.0.0715 (c) 2008 Dowling Assoc. Licensed to URBAN CROSSROADS, IRVINE

Movement	EBL	EBT	EBR	WBL	WBT	WBR	NBL	NBT	NBR	SBL	SBT	SBR
Lane Configurations												
Volume (vph)	0	0	0	244	295	262	347	458	0	0	334	156
Ideal Flow (vphpl)	1900	1900	1900	1900	1900	1900	1900	1900	1900	1900	1900	1900
Total Lost time (s)					5.0		4.0	5.0			5.0	
Lane Util. Factor					0.95		1.00	0.95			0.95	
Frpb, ped/bikes					0.99		1.00	1.00			1.00	
Flpb, ped/bikes					1.00		1.00	1.00			1.00	
Frt					0.95		1.00	1.00			0.95	
Flt Protected					0.99		0.95	1.00			1.00	
Satd. Flow (prot)					3361		1805	3610			3437	
Flt Permitted					0.99		0.95	1.00			1.00	
Satd. Flow (perm)					3361		1805	3610			3437	
Peak-hour factor, PHF	0.92	0.92	0.92	0.92	0.92	0.92	0.92	0.92	0.92	0.92	0.92	0.92
Adj. Flow (vph)	0	0	0	265	321	285	377	498	0	0	363	170
RTOR Reduction (vph)	0	0	0	0	59	0	0	0	0	0	52	0
Lane Group Flow (vph)	0	0	0	0	812	0	377	498	0	0	481	0
Confl. Peds. (#/hr)						5						
Heavy Vehicles (%)	0%	0%	0%	0%	0%	0%	0%	0%	0%	0%	0%	0%
Turn Type				Split			Prot					
Protected Phases				4	4		1	6			2	
Permitted Phases												
Actuated Green, G (s)					23.0		24.2	67.0			38.8	
Effective Green, g (s)					23.0		24.2	67.0			38.8	
Actuated g/C Ratio					0.23		0.24	0.67			0.39	
Clearance Time (s)					5.0		4.0	5.0			5.0	
Vehicle Extension (s)					2.0		2.0	2.0			2.0	
Lane Grp Cap (vph)					773		437	2419			1334	
v/s Ratio Prot					c0.24		c0.21	0.14			c0.14	
v/s Ratio Perm												
v/c Ratio					1.05		0.86	0.21			0.36	
Uniform Delay, d1					38.5		36.3	6.3			21.8	
Progression Factor					1.00		1.04	1.20			1.00	
Incremental Delay, d2					46.3		15.0	0.2			0.8	
Delay (s)					84.8		52.6	7.7			22.5	
Level of Service					F		D	A			C	
Approach Delay (s)		0.0			84.8			27.1			22.5	
Approach LOS		A			F			C			C	

Intersection Summary			
HCM Average Control Delay	48.1	HCM Level of Service	D
HCM Volume to Capacity ratio	0.69		
Actuated Cycle Length (s)	100.0	Sum of lost time (s)	14.0
Intersection Capacity Utilization	68.9%	ICU Level of Service	C
Analysis Period (min)	15		
c Critical Lane Group			

Movement	EBL	EBT	EBR	WBL	WBT	WBR	NBL	NBT	NBR	SBL	SBT	SBR
Lane Configurations												
Volume (vph)	212	1	373	0	0	0	0	593	123	49	547	0
Ideal Flow (vphpl)	1900	1900	1900	1900	1900	1900	1900	1900	1900	1900	1900	1900
Total Lost time (s)		5.0						5.0	5.0	4.0	5.0	
Lane Util. Factor		0.95						0.95	1.00	1.00	0.95	
Frpb, ped/bikes		1.00						1.00	0.98	1.00	1.00	
Flpb, ped/bikes		1.00						1.00	1.00	1.00	1.00	
Frt		0.90						1.00	0.85	1.00	1.00	
Flt Protected		0.98						1.00	1.00	0.95	1.00	
Satd. Flow (prot)		3207						3610	1581	1805	3610	
Flt Permitted		0.98						1.00	1.00	0.95	1.00	
Satd. Flow (perm)		3207						3610	1581	1805	3610	
Peak-hour factor, PHF	0.94	0.94	0.94	0.94	0.94	0.94	0.94	0.94	0.94	0.94	0.94	0.94
Adj. Flow (vph)	226	1	397	0	0	0	0	631	131	52	582	0
RTOR Reduction (vph)	0	269	0	0	0	0	0	0	47	0	0	0
Lane Group Flow (vph)	0	355	0	0	0	0	0	631	84	52	582	0
Confl. Peds. (#/hr)									5			
Heavy Vehicles (%)	0%	0%	0%	0%	0%	0%	0%	0%	0%	0%	0%	0%
Turn Type	Split								Perm	Prot		
Protected Phases	8	8						6		5	2	
Permitted Phases									6			
Actuated Green, G (s)		15.2						64.4	64.4	6.4	74.8	
Effective Green, g (s)		15.2						64.4	64.4	6.4	74.8	
Actuated g/C Ratio		0.15						0.64	0.64	0.06	0.75	
Clearance Time (s)		5.0						5.0	5.0	4.0	5.0	
Vehicle Extension (s)		2.0						2.0	2.0	2.0	2.0	
Lane Grp Cap (vph)		487						2325	1018	116	2700	
v/s Ratio Prot		c0.11						c0.17		c0.03	0.16	
v/s Ratio Perm									0.05			
v/c Ratio		0.73						0.27	0.08	0.45	0.22	
Uniform Delay, d1		40.4						7.7	6.7	45.1	3.8	
Progression Factor		1.00						1.00	1.00	0.99	0.14	
Incremental Delay, d2		4.6						0.3	0.2	0.8	0.1	
Delay (s)		45.0						8.0	6.9	45.3	0.7	
Level of Service		D						A	A	D	A	
Approach Delay (s)		45.0			0.0			7.8			4.3	
Approach LOS		D			A			A			A	

Intersection Summary			
HCM Average Control Delay	18.2	HCM Level of Service	B
HCM Volume to Capacity ratio	0.37		
Actuated Cycle Length (s)	100.0	Sum of lost time (s)	14.0
Intersection Capacity Utilization	68.9%	ICU Level of Service	C
Analysis Period (min)	15		
c Critical Lane Group			

UNIVERISTY CROSSINGS APARTMENTS TRAFFIC IMPACT ANALYSIS (JN 08139)
Existing 2012 Conditions
AM PEAK HOUR

Level Of Service Computation Report
2000 HCM Operations Method (Base Volume Alternative)

Intersection #8 Alabama Street / Redlands Boulevard

Cycle (sec): 90 Critical Vol./Cap.(X): 0.566
Loss Time (sec): 8 Average Delay (sec/veh): 30.7
Optimal Cycle: OPTIMIZED Level Of Service: C

Approach:	North Bound			South Bound			East Bound			West Bound		
Movement:	L -	T -	R	L -	T -	R	L -	T -	R	L -	T -	R
Control:	Split Phase			Split Phase			Protected			Protected		
Rights:	Include			Include			Include			Include		
Min. Green:	25	25	25	25	25	25	10	23	23	10	23	23
Y+R:	4.0	4.0	4.0	4.0	4.0	4.0	4.0	4.0	4.0	4.0	4.0	4.0
Lanes:	1 0	1	1 0	1 0	1	1 0	1 0	2	0 1	1 0	2	0 1
Volume Module:												
Base Vol:	69	460	40	84	459	160	106	164	30	43	278	93
Growth Adj:	1.00	1.00	1.00	1.00	1.00	1.00	1.00	1.00	1.00	1.00	1.00	1.00
Initial Bse:	69	460	40	84	459	160	106	164	30	43	278	93
User Adj:	1.00	1.00	1.00	1.00	1.00	1.00	1.00	1.00	1.00	1.00	1.00	1.00
PHF Adj:	0.90	0.90	0.90	0.90	0.90	0.90	0.90	0.90	0.90	0.90	0.90	0.90
PHF Volume:	77	513	45	94	512	179	118	183	33	48	310	104
Reduct Vol:	0	0	0	0	0	0	0	0	0	0	0	0
Reduced Vol:	77	513	45	94	512	179	118	183	33	48	310	104
PCE Adj:	1.00	1.00	1.00	1.00	1.00	1.00	1.00	1.00	1.00	1.00	1.00	1.00
MLF Adj:	1.00	1.00	1.00	1.00	1.00	1.00	1.00	1.00	1.00	1.00	1.00	1.00
FinalVolume:	77	513	45	94	512	179	118	183	33	48	310	104
Saturation Flow Module:												
Sat/Lane:	1800	1800	1800	1800	1800	1800	1800	1800	1800	1800	1800	1800
Adjustment:	0.90	0.99	0.99	0.90	0.96	0.96	0.90	1.00	0.85	0.90	1.00	0.85
Lanes:	1.00	1.84	0.16	1.00	1.48	0.52	1.00	2.00	1.00	1.00	2.00	1.00
Final Sat.:	1615	3272	285	1615	2565	894	1615	3600	1530	1615	3600	1530
Capacity Analysis Module:												
Vol/Sat:	0.05	0.16	0.16	0.06	0.20	0.20	0.07	0.05	0.02	0.03	0.09	0.07
Crit Moves:		****			****		****				****	
Green/Cycle:	0.27	0.27	0.27	0.27	0.27	0.27	0.11	0.25	0.25	0.11	0.25	0.25
Volume/Cap:	0.17	0.57	0.57	0.21	0.73	0.73	0.67	0.20	0.09	0.27	0.34	0.27
Delay/Veh:	25.3	29.2	29.2	25.6	32.8	32.8	48.2	26.9	26.1	38.0	28.0	27.6
User DelAdj:	1.00	1.00	1.00	1.00	1.00	1.00	1.00	1.00	1.00	1.00	1.00	1.00
AdjDel/Veh:	25.3	29.2	29.2	25.6	32.8	32.8	48.2	26.9	26.1	38.0	28.0	27.6
LOS by Move:	C	C	C	C	C	C	D	C	C	D	C	C
HCM2kAvgQ:	2	7	7	2	10	10	5	2	1	2	4	2

Note: Queue reported is the number of cars per lane.

Traffix 8.0.0715 (c) 2008 Dowling Assoc. Licensed to URBAN CROSSROADS, IRVINE

UNIVERISTY CROSSINGS APARTMENTS TRAFFIC IMPACT ANALYSIS (JN 08139)
Existing 2012 Conditions
PM PEAK HOUR

Level Of Service Computation Report
2000 HCM Operations Method (Base Volume Alternative)

Intersection #1 California Street / Lugonia Avenue

Cycle (sec): 70 Critical Vol./Cap.(X): 0.378
Loss Time (sec): 6 Average Delay (sec/veh): 24.0
Optimal Cycle: OPTIMIZED Level Of Service: C

Approach:	North Bound			South Bound			East Bound			West Bound		
Movement:	L - T - R			L - T - R			L - T - R			L - T - R		
Control:	Permitted			Permitted			Split Phase			Split Phase		
Rights:	Include			Include			Include			Include		
Min. Green:	10	10	10	28	28	28	30	30	30	10	10	10
Y+R:	4.0	4.0	4.0	4.0	4.0	4.0	4.0	4.0	4.0	4.0	4.0	4.0
Lanes:	1 0 1	0 1		1 0 2	0 1		0 1 0	0 1		0 0 1!	0 0	
Volume Module:												
Base Vol:	66	240	124	32	464	7	4	44	166	157	38	30
Growth Adj:	1.00	1.00	1.00	1.00	1.00	1.00	1.00	1.00	1.00	1.00	1.00	1.00
Initial Bse:	66	240	124	32	464	7	4	44	166	157	38	30
User Adj:	1.00	1.00	1.00	1.00	1.00	1.00	1.00	1.00	1.00	1.00	1.00	1.00
PHF Adj:	0.87	0.87	0.87	0.87	0.87	0.87	0.87	0.87	0.87	0.87	0.87	0.87
PHF Volume:	76	275	142	37	532	8	5	50	190	180	44	34
Reduct Vol:	0	0	0	0	0	0	0	0	0	0	0	0
Reduced Vol:	76	275	142	37	532	8	5	50	190	180	44	34
PCE Adj:	1.00	1.00	1.00	1.00	1.00	1.00	1.00	1.00	1.00	1.00	1.00	1.00
MLF Adj:	1.00	1.00	1.00	1.00	1.00	1.00	1.00	1.00	1.00	1.00	1.00	1.00
FinalVolume:	76	275	142	37	532	8	5	50	190	180	44	34
Saturation Flow Module:												
Sat/Lane:	1800	1800	1800	1800	1800	1800	1800	1800	1800	1800	1800	1800
Adjustment:	0.26	1.00	0.85	0.32	1.00	0.85	0.94	1.00	0.85	0.90	0.95	0.95
Lanes:	1.00	1.00	1.00	1.00	2.00	1.00	0.09	0.91	1.00	0.71	0.16	0.13
Final Sat.:	476	1800	1530	581	3600	1530	149	1635	1530	1144	277	219
Capacity Analysis Module:												
Vol/Sat:	0.16	0.15	0.09	0.06	0.15	0.01	0.03	0.03	0.12	0.16	0.16	0.16
Crit Moves:	****						****				****	
Green/Cycle:	0.26	0.26	0.26	0.26	0.26	0.26	0.41	0.41	0.41	0.26	0.26	0.26
Volume/Cap:	0.62	0.59	0.36	0.24	0.57	0.02	0.08	0.08	0.31	0.62	0.62	0.62
Delay/Veh:	33.3	26.1	23.0	22.6	24.8	20.5	13.5	13.5	15.2	27.1	27.1	27.1
User DelAdj:	1.00	1.00	1.00	1.00	1.00	1.00	1.00	1.00	1.00	1.00	1.00	1.00
AdjDel/Veh:	33.3	26.1	23.0	22.6	24.8	20.5	13.5	13.5	15.2	27.1	27.1	27.1
LOS by Move:	C	C	C	C	C	C	B	B	B	C	C	C
HCM2kAvgQ:	3	6	3	1	6	0	1	1	3	6	6	6

Note: Queue reported is the number of cars per lane.

Traffix 8.0.0715 (c) 2008 Dowling Assoc. Licensed to URBAN CROSSROADS, IRVINE

UNIVERISTY CROSSINGS APARTMENTS TRAFFIC IMPACT ANALYSIS (JN 08139)
Existing 2012 Conditions
PM PEAK HOUR

Level Of Service Computation Report
2000 HCM 4-Way Stop Method (Base Volume Alternative)

Intersection #2 Nevada Street / Lugonia Avenue

Cycle (sec):	0	Critical Vol./Cap.(X):	0.666
Loss Time (sec):	0	Average Delay (sec/veh):	16.3
Optimal Cycle:	0	Level Of Service:	C

Approach:	North Bound			South Bound			East Bound			West Bound		
Movement:	L - T - R			L - T - R			L - T - R			L - T - R		
Control:	Stop Sign			Stop Sign			Stop Sign			Stop Sign		
Rights:	Include			Include			Include			Include		
Min. Green:	0	0	0	0	0	0	0	0	0	0	0	0
Lanes:	0 1	0 0	1	0 0	1!	0 0	0 1	0 0	1	0 0	1!	0 0
Volume Module:												
Base Vol:	18	167	167	21	132	5	23	191	47	119	155	9
Growth Adj:	1.00	1.00	1.00	1.00	1.00	1.00	1.00	1.00	1.00	1.00	1.00	1.00
Initial Bse:	18	167	167	21	132	5	23	191	47	119	155	9
User Adj:	1.00	1.00	1.00	1.00	1.00	1.00	1.00	1.00	1.00	1.00	1.00	1.00
PHF Adj:	0.85	0.85	0.85	0.85	0.85	0.85	0.85	0.85	0.85	0.85	0.85	0.85
PHF Volume:	21	197	197	25	156	6	27	226	56	141	183	11
Reduct Vol:	0	0	0	0	0	0	0	0	0	0	0	0
Reduced Vol:	21	197	197	25	156	6	27	226	56	141	183	11
PCE Adj:	1.00	1.00	1.00	1.00	1.00	1.00	1.00	1.00	1.00	1.00	1.00	1.00
MLF Adj:	1.00	1.00	1.00	1.00	1.00	1.00	1.00	1.00	1.00	1.00	1.00	1.00
FinalVolume:	21	197	197	25	156	6	27	226	56	141	183	11
Saturation Flow Module:												
Adjustment:	1.00	1.00	1.00	1.00	1.00	1.00	1.00	1.00	1.00	1.00	1.00	1.00
Lanes:	0.10	0.90	1.00	0.13	0.84	0.03	0.11	0.89	1.00	0.42	0.55	0.03
Final Sat.:	48	447	551	60	379	14	53	439	547	211	275	16
Capacity Analysis Module:												
Vol/Sat:	0.44	0.44	0.36	0.41	0.41	0.41	0.51	0.51	0.10	0.67	0.67	0.67
Crit Moves:	****				****			****				****
Delay/Veh:	14.7	14.7	12.1	14.8	14.8	14.8	16.2	16.2	9.6	21.7	21.7	21.7
Delay Adj:	1.00	1.00	1.00	1.00	1.00	1.00	1.00	1.00	1.00	1.00	1.00	1.00
AdjDel/Veh:	14.7	14.7	12.1	14.8	14.8	14.8	16.2	16.2	9.6	21.7	21.7	21.7
LOS by Move:	B	B	B	B	B	B	C	C	A	C	C	C
ApproachDel:	13.4			14.8			15.0			21.7		
Delay Adj:	1.00			1.00			1.00			1.00		
ApprAdjDel:	13.4			14.8			15.0			21.7		
LOS by Appr:	B			B			C			C		
AllWayAvgQ:	0.7	0.7	0.5	0.6	0.6	0.6	0.9	0.9	0.1	1.6	1.6	1.6

Note: Queue reported is the number of cars per lane.

Traffix 8.0.0715 (c) 2008 Dowling Assoc. Licensed to URBAN CROSSROADS, IRVINE

UNIVERISTY CROSSINGS APARTMENTS TRAFFIC IMPACT ANALYSIS (JN 08139)
Existing 2012 Conditions
PM PEAK HOUR

Level Of Service Computation Report
2000 HCM Operations Method (Base Volume Alternative)

Intersection #5 Alabama Street / Lugonia Avenue

Cycle (sec): 90 Critical Vol./Cap.(X): 0.727
Loss Time (sec): 8 Average Delay (sec/veh): 34.6
Optimal Cycle: OPTIMIZED Level Of Service: C

Approach:	North Bound			South Bound			East Bound			West Bound		
Movement:	L - T - R			L - T - R			L - T - R			L - T - R		
Control:	Protected			Protected			Protected			Protected		
Rights:	Include			Include			Include			Include		
Min. Green:	10	20	20	10	20	20	10	24	24	10	24	24
Y+R:	4.0	4.0	4.0	4.0	4.0	4.0	4.0	4.0	4.0	4.0	4.0	4.0
Lanes:	1 0	2 0	1	1 0	3 0	1	1 0	1 1	0	1 0	2 0	1
Volume Module:												
Base Vol:	116	593	370	134	475	21	130	309	70	342	263	42
Growth Adj:	1.00	1.00	1.00	1.00	1.00	1.00	1.00	1.00	1.00	1.00	1.00	1.00
Initial Bse:	116	593	370	134	475	21	130	309	70	342	263	42
User Adj:	1.00	1.00	1.00	1.00	1.00	1.00	1.00	1.00	1.00	1.00	1.00	1.00
PHF Adj:	0.97	0.97	0.97	0.97	0.97	0.97	0.97	0.97	0.97	0.97	0.97	0.97
PHF Volume:	119	609	380	138	488	22	134	318	72	351	270	43
Reduct Vol:	0	0	0	0	0	0	0	0	0	0	0	0
Reduced Vol:	119	609	380	138	488	22	134	318	72	351	270	43
PCE Adj:	1.00	1.00	1.00	1.00	1.00	1.00	1.00	1.00	1.00	1.00	1.00	1.00
MLF Adj:	1.00	1.00	1.00	1.00	1.00	1.00	1.00	1.00	1.00	1.00	1.00	1.00
FinalVolume:	119	609	380	138	488	22	134	318	72	351	270	43
Saturation Flow Module:												
Sat/Lane:	1800	1800	1800	1800	1800	1800	1800	1800	1800	1800	1800	1800
Adjustment:	0.90	1.00	0.85	0.90	1.00	0.85	0.90	0.97	0.97	0.90	1.00	0.85
Lanes:	1.00	2.00	1.00	1.00	3.00	1.00	1.00	1.63	0.37	1.00	2.00	1.00
Final Sat.:	1615	3600	1530	1615	5400	1530	1615	2853	646	1615	3600	1530
Capacity Analysis Module:												
Vol/Sat:	0.07	0.17	0.25	0.09	0.09	0.01	0.08	0.11	0.11	0.22	0.08	0.03
Crit Moves:			****	****				****		****		
Green/Cycle:	0.13	0.28	0.28	0.11	0.26	0.26	0.15	0.27	0.27	0.25	0.36	0.36
Volume/Cap:	0.56	0.60	0.87	0.77	0.34	0.05	0.55	0.42	0.42	0.87	0.21	0.08
Delay/Veh:	40.0	28.7	48.2	56.8	27.0	24.8	37.9	27.5	27.5	51.1	19.8	18.8
User DelAdj:	1.00	1.00	1.00	1.00	1.00	1.00	1.00	1.00	1.00	1.00	1.00	1.00
AdjDel/Veh:	40.0	28.7	48.2	56.8	27.0	24.8	37.9	27.5	27.5	51.1	19.8	18.8
LOS by Move:	D	C	D	E	C	C	D	C	C	D	B	B
HCM2kAvgQ:	4	8	13	6	4	0	4	5	5	13	3	1

Note: Queue reported is the number of cars per lane.

Traffix 8.0.0715 (c) 2008 Dowling Assoc. Licensed to URBAN CROSSROADS, IRVINE

Movement	EBL	EBT	EBR	WBL	WBT	WBR	NBL	NBT	NBR	SBL	SBT	SBR
Lane Configurations												
Volume (vph)	0	0	0	164	316	166	376	1105	0	0	765	307
Ideal Flow (vphpl)	1900	1900	1900	1900	1900	1900	1900	1900	1900	1900	1900	1900
Total Lost time (s)					5.0		4.0	5.0			5.0	
Lane Util. Factor					0.95		1.00	0.95			0.95	
Frpb, ped/bikes					1.00		1.00	1.00			1.00	
Flpb, ped/bikes					1.00		1.00	1.00			1.00	
Frt					0.96		1.00	1.00			0.96	
Flt Protected					0.99		0.95	1.00			1.00	
Satd. Flow (prot)					3411		1805	3610			3455	
Flt Permitted					0.99		0.95	1.00			1.00	
Satd. Flow (perm)					3411		1805	3610			3455	
Peak-hour factor, PHF	0.97	0.97	0.97	0.97	0.97	0.97	0.97	0.97	0.97	0.97	0.97	0.97
Adj. Flow (vph)	0	0	0	169	326	171	388	1139	0	0	789	316
RTOR Reduction (vph)	0	0	0	0	35	0	0	0	0	0	40	0
Lane Group Flow (vph)	0	0	0	0	631	0	388	1139	0	0	1065	0
Confl. Peds. (#/hr)						5						
Heavy Vehicles (%)	0%	0%	0%	0%	0%	0%	0%	0%	0%	0%	0%	0%
Turn Type				Split			Prot					
Protected Phases				4	4		1	6			2	
Permitted Phases												
Actuated Green, G (s)					21.4		24.6	68.6			40.0	
Effective Green, g (s)					21.4		24.6	68.6			40.0	
Actuated g/C Ratio					0.21		0.25	0.69			0.40	
Clearance Time (s)					5.0		4.0	5.0			5.0	
Vehicle Extension (s)					2.0		2.0	2.0			2.0	
Lane Grp Cap (vph)					730		444	2476			1382	
v/s Ratio Prot					c0.19		c0.21	0.32			c0.31	
v/s Ratio Perm												
v/c Ratio					0.86		0.87	0.46			0.77	
Uniform Delay, d1					37.9		36.2	7.2			26.0	
Progression Factor					1.00		0.90	1.97			1.00	
Incremental Delay, d2					10.1		13.0	0.5			4.2	
Delay (s)					48.0		45.4	14.7			30.2	
Level of Service					D		D	B			C	
Approach Delay (s)		0.0			48.0			22.5			30.2	
Approach LOS		A			D			C			C	

Intersection Summary			
HCM Average Control Delay	30.2	HCM Level of Service	C
HCM Volume to Capacity ratio	0.82		
Actuated Cycle Length (s)	100.0	Sum of lost time (s)	14.0
Intersection Capacity Utilization	82.4%	ICU Level of Service	E
Analysis Period (min)	15		
c Critical Lane Group			

Movement	EBL	EBT	EBR	WBL	WBT	WBR	NBL	NBT	NBR	SBL	SBT	SBR
Lane Configurations												
Volume (vph)	460	4	422	0	0	0	0	1021	269	211	720	0
Ideal Flow (vphpl)	1900	1900	1900	1900	1900	1900	1900	1900	1900	1900	1900	1900
Total Lost time (s)		5.0						5.0	5.0	4.0	5.0	
Lane Util. Factor		0.95						0.95	1.00	1.00	0.95	
Frpb, ped/bikes		1.00						1.00	0.98	1.00	1.00	
Flpb, ped/bikes		1.00						1.00	1.00	1.00	1.00	
Frt		0.93						1.00	0.85	1.00	1.00	
Flt Protected		0.97						1.00	1.00	0.95	1.00	
Satd. Flow (prot)		3267						3610	1581	1805	3610	
Flt Permitted		0.97						1.00	1.00	0.95	1.00	
Satd. Flow (perm)		3267						3610	1581	1805	3610	
Peak-hour factor, PHF	0.99	0.99	0.99	0.99	0.99	0.99	0.99	0.99	0.99	0.99	0.99	0.99
Adj. Flow (vph)	465	4	426	0	0	0	0	1031	272	213	727	0
RTOR Reduction (vph)	0	171	0	0	0	0	0	0	147	0	0	0
Lane Group Flow (vph)	0	724	0	0	0	0	0	1031	125	213	727	0
Confl. Peds. (#/hr)									5			
Heavy Vehicles (%)	0%	0%	0%	0%	0%	0%	0%	0%	0%	0%	0%	0%
Turn Type	Split								Perm	Prot		
Protected Phases	8	8						6		5	2	
Permitted Phases									6			
Actuated Green, G (s)		25.5						45.9	45.9	14.6	64.5	
Effective Green, g (s)		25.5						45.9	45.9	14.6	64.5	
Actuated g/C Ratio		0.26						0.46	0.46	0.15	0.64	
Clearance Time (s)		5.0						5.0	5.0	4.0	5.0	
Vehicle Extension (s)		2.0						2.0	2.0	2.0	2.0	
Lane Grp Cap (vph)		833						1657	726	264	2328	
v/s Ratio Prot		c0.22						c0.29		c0.12	0.20	
v/s Ratio Perm									0.08			
v/c Ratio		0.87						0.62	0.17	0.81	0.31	
Uniform Delay, d1		35.6						20.5	15.9	41.3	7.9	
Progression Factor		1.00						1.00	1.00	0.74	0.45	
Incremental Delay, d2		9.2						1.8	0.5	9.8	0.2	
Delay (s)		44.9						22.3	16.4	40.3	3.7	
Level of Service		D						C	B	D	A	
Approach Delay (s)		44.9			0.0			21.0			12.0	
Approach LOS		D			A			C			B	

Intersection Summary			
HCM Average Control Delay	25.1	HCM Level of Service	C
HCM Volume to Capacity ratio	0.73		
Actuated Cycle Length (s)	100.0	Sum of lost time (s)	14.0
Intersection Capacity Utilization	82.4%	ICU Level of Service	E
Analysis Period (min)	15		
c Critical Lane Group			

UNIVERISTY CROSSINGS APARTMENTS TRAFFIC IMPACT ANALYSIS (JN 08139)
Existing 2012 Conditions
PM PEAK HOUR

Level Of Service Computation Report
2000 HCM Operations Method (Base Volume Alternative)

Intersection #8 Alabama Street / Redlands Boulevard

Cycle (sec): 105 Critical Vol./Cap.(X): 0.733
Loss Time (sec): 8 Average Delay (sec/veh): 39.4
Optimal Cycle: OPTIMIZED Level Of Service: D

Approach:	North Bound			South Bound			East Bound			West Bound		
Movement:	L - T	- R		L - T	- R		L - T	- R		L - T	- R	
Control:	Split Phase			Split Phase			Protected			Protected		
Rights:	Include			Include			Include			Include		
Min. Green:	25	25	25	25	25	25	10	23	23	10	23	23
Y+R:	4.0	4.0	4.0	4.0	4.0	4.0	4.0	4.0	4.0	4.0	4.0	4.0
Lanes:	1 0	1	1 0	1 0	1	1 0	1 0	2	0 1	1 0	2	0 1
Volume Module:												
Base Vol:	67	525	77	127	537	104	273	530	78	86	347	153
Growth Adj:	1.00	1.00	1.00	1.00	1.00	1.00	1.00	1.00	1.00	1.00	1.00	1.00
Initial Bse:	67	525	77	127	537	104	273	530	78	86	347	153
User Adj:	1.00	1.00	1.00	1.00	1.00	1.00	1.00	1.00	1.00	1.00	1.00	1.00
PHF Adj:	0.92	0.92	0.92	0.92	0.92	0.92	0.92	0.92	0.92	0.92	0.92	0.92
PHF Volume:	73	571	84	138	584	113	297	577	85	94	378	166
Reduct Vol:	0	0	0	0	0	0	0	0	0	0	0	0
Reduced Vol:	73	571	84	138	584	113	297	577	85	94	378	166
PCE Adj:	1.00	1.00	1.00	1.00	1.00	1.00	1.00	1.00	1.00	1.00	1.00	1.00
MLF Adj:	1.00	1.00	1.00	1.00	1.00	1.00	1.00	1.00	1.00	1.00	1.00	1.00
FinalVolume:	73	571	84	138	584	113	297	577	85	94	378	166
Saturation Flow Module:												
Sat/Lane:	1800	1800	1800	1800	1800	1800	1800	1800	1800	1800	1800	1800
Adjustment:	0.90	0.98	0.98	0.90	0.98	0.98	0.90	1.00	0.85	0.90	1.00	0.85
Lanes:	1.00	1.74	0.26	1.00	1.68	0.32	1.00	2.00	1.00	1.00	2.00	1.00
Final Sat.:	1615	3080	452	1615	2944	570	1615	3600	1530	1615	3600	1530
Capacity Analysis Module:												
Vol/Sat:	0.05	0.19	0.19	0.09	0.20	0.20	0.18	0.16	0.06	0.06	0.10	0.11
Crit Moves:		****			****		****					****
Green/Cycle:	0.24	0.24	0.24	0.24	0.24	0.24	0.22	0.31	0.31	0.13	0.22	0.22
Volume/Cap:	0.19	0.78	0.78	0.35	0.82	0.82	0.82	0.52	0.18	0.43	0.48	0.50
Delay/Veh:	32.2	42.1	42.1	33.5	44.0	44.0	52.4	30.3	26.7	43.1	36.2	37.1
User DelAdj:	1.00	1.00	1.00	1.00	1.00	1.00	1.00	1.00	1.00	1.00	1.00	1.00
AdjDel/Veh:	32.2	42.1	42.1	33.5	44.0	44.0	52.4	30.3	26.7	43.1	36.2	37.1
LOS by Move:	C	D	D	C	D	D	D	C	C	D	D	D
HCM2kAvgQ:	2	12	12	4	13	13	12	8	2	3	6	5

Note: Queue reported is the number of cars per lane.

Traffix 8.0.0715 (c) 2008 Dowling Assoc. Licensed to URBAN CROSSROADS, IRVINE

APPENDIX 3.4

Existing (2012) Conditions
Traffic Signal Warrant Analysis Worksheets

Figure 4C-4. Warrant 3, Peak Hour (70% Factor)

(COMMUNITY LESS THAN 10,000 POPULATION OR ABOVE 64 km/h OR ABOVE 40 mph ON MAJOR STREET)

Traffic Conditions = **Existing (2012) Conditions - Weekday PM Peak Hour**

Major Street Name = **Lugonia Avenue**
Total of Both Approaches (VPH) = **544**
Number of Approach Lanes Major Street = **1**

Minor Street Name = **Nevada Street**
High Volume Approach (VPH) = **352**
Number of Approach Lanes Minor Street = **1**

WARRANTED FOR A SIGNAL

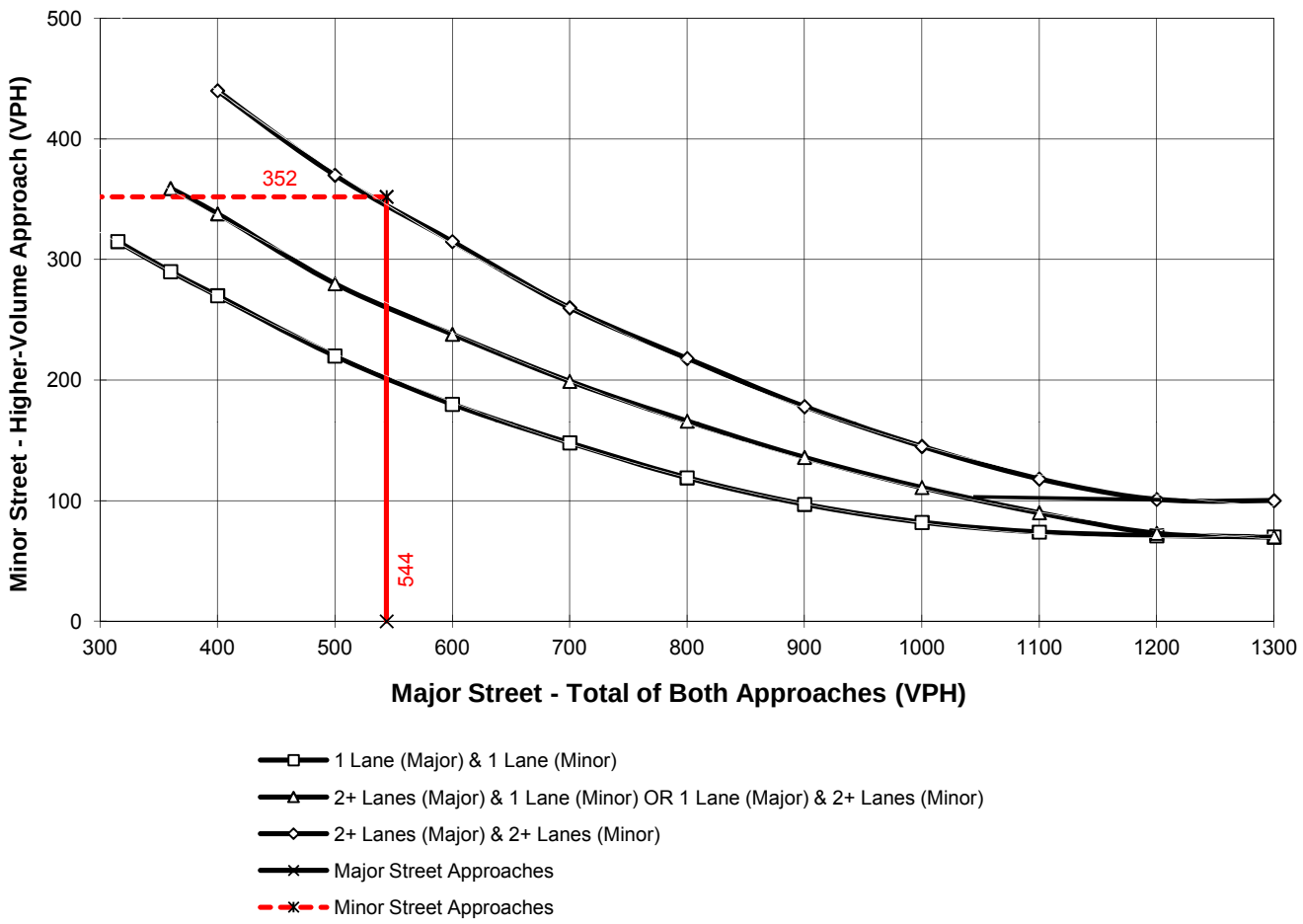

*Note: 100 vph applies as the lower threshold for a minor-street approach with two or more lanes and 75 vph applies as the lower threshold for a minor-street approach with one lane

This Page Intentionally Left Blank

APPENDIX 4.1

Cumulative Development
Trip Generation Summary

Table 4.1-1

Cumulative Development PM Peak Hour & Weekday Daily Trip Generation Rates[1]

Land Use	ITE Code	Units	AM Peak Hour			PM Peak Hour			Weekday
			In	Out	Total	In	Out	Total	Daily
General Light Industrial	110	TSF	0.81	0.11	0.92	0.12	0.85	0.97	6.97
Industrial Park	130	TSF	0.69	0.15	0.84	0.18	0.68	0.86	6.96
Mini Warehouse	151	TSF	0.24	0.06	0.30	0.13	0.13	0.26	2.50
High-Cube Warehouse	152	TSF	0.06	0.03	0.09	0.03	0.07	0.10	1.44
SFDR	210	DU	0.19	0.56	0.75	0.64	0.37	1.01	9.57
Apartments	220	DU	0.10	0.41	0.51	0.40	0.22	0.62	6.65
Condo/Townhomes	230	DU	0.07	0.37	0.44	0.35	0.17	0.52	5.81
Senior Adult Housing-Attached	252	DU	0.05	0.08	0.13	0.10	0.06	0.16	3.48
Hotel	310	RMS	0.34	0.22	0.56	0.31	0.28	0.59	8.17
Theatre (With ULI adjustment %)	443	SEATS	N/A	N/A	N/A	0.13	0.19	0.32	1.76
Recreational Community Center	495	TSF	0.99	0.63	1.62	0.54	0.91	1.45	22.88
Church	560	TSF	0.35	0.21	0.56	0.26	0.29	0.55	9.11
Daycare	565	TSF	6.50	5.76	12.26	5.86	6.60	12.46	79.26
General Office (8.132 TSF)	710	TSF	2.73	0.37	3.10	1.84	8.97	10.81	23.76
General Office (51.432 TSF)	710	TSF	1.89	0.26	2.15	0.45	2.20	2.65	15.55
General Office (7.000 TSF)	710	TSF	2.81	0.38	3.19	2.10	10.27	12.37	24.59
General Office (149.000 TSF)	710	TSF	1.52	0.21	1.73	0.28	1.37	1.65	12.17
General Office (60.000 TSF)	710	TSF	1.83	0.25	2.08	0.41	2.02	2.43	15.00
Medical-Dental Office	720	TSF	1.82	0.48	2.30	0.93	2.53	3.46	36.13
Free-Standing Discount Superstore	813	TSF	0.94	0.73	1.67	2.26	2.35	4.61	53.13
Specialty Retail	820/814	TSF	0.61	0.39	1.00	1.19	1.52	2.71	44.32
Shopping Center (Average)	820	TSF	0.61	0.39	1.00	1.83	1.90	3.73	42.94
Shopping Center (1,850.000 TSF)	820	TSF	0.28	0.18	0.46	1.19	1.24	2.43	24.46
Shopping Center (42.840 TSF)	820	TSF	1.33	0.85	2.18	4.12	4.29	8.41	91.37
Shopping Center (355.000 TSF)	820	TSF	0.56	0.36	0.92	2.05	2.14	4.19	43.59
Shopping Center (80.000 TSF)	820	TSF	1.03	0.66	1.69	3.36	3.49	6.85	73.43
Drive-In Bank	912	TSF	6.92	5.43	12.35	12.91	12.91	25.82	148.15
Sit-Down Restaurant	931	TSF	0.41	0.41	0.81	5.02	2.47	7.49	89.95
High-Turnover (Sit-Down) Restaurant	932	TSF	5.99	5.53	11.52	6.58	4.57	11.15	127.15
Fast-Food Restaurant without Drive-Thru	933	TSF	26.32	17.55	43.87	13.34	12.81	26.15	716.00
Fast-Food Restaurant with Drive-Thru	934	TSF	25.17	24.18	49.35	17.60	16.24	33.84	496.12
Gas Station w/ Convenience Market	945	TSF	40.44	38.86	79.30	48.54	48.54	97.08	970.80
Gas Station w/ Food Mart & Car Wash	946	VFP	6.08	5.85	11.93	7.11	6.83	13.94	152.84
Self-Service Car Wash	947	STALLS	N/A	N/A	N/A	2.83	2.71	5.54	108.00

[1] Source: ITE (Institute of Transportation Engineers) Trip Generation Manual, 8th Edition, 2008.

[2] DU = Dwelling Units; TSF = Thousand Square Feet; VFP = Vehicle Fueling Positions

Table 4.1-2 (Page 1 of 4)

Cumulative Development Weekday Trip Generation

#	Project/Location	Land Use[1]	Quantity	Units[2]	AM Peak Hour In	AM Peak Hour Out	AM Peak Hour Total	PM Peak Hour In	PM Peak Hour Out	PM Peak Hour Total	Weekday Daily
1	East of Research Dr., south of Almond Av., north of Lugonia Av.	Industrial Park	880.118	TSF							
		Passenger Cars			483	105	588	126	476	602	4,874
		Truck Trips									
		2-Axle PCE (1.5)			*32*	*7*	*38*	*8*	*31*	*39*	*318*
		3-Axle PCE (2.0)			*56*	*12*	*69*	*15*	*56*	*70*	*568*
		4+-Axle PCE (3.0)			*225*	*49*	*273*	*59*	*221*	*280*	*2,266*
		Net Truck Trips (PCE)			313	68	380	82	308	390	3,152
	Subtotal #1 (Vehicles)				**796**	**173**	**969**	**208**	**784**	**992**	**8,026**
2	South of I-10, west of California St.	Commercial Retail Center	51.101	TSF	31	20	51	61	78	138	2,265
3	NE corner of Plum Ln. & Idaho St.	General Office	8.132	TSF	22	3	25	15	73	88	193
4	South of Orange Tree Ln., west of Nevada St.	General Office	51.432	TSF	97	13	111	23	113	136	800
5	South of Lugonia Ave., west of Nevada St.	Hotel	102	RMS	35	22	57	32	29	60	833
6	1776 Park Av.	Medical-Dental Office	52.559	TSF	96	25	121	49	133	182	1,899
7	415-495 Park Av.	Medical-Dental Office	122.604	TSF	223	59	282	114	310	424	4,430
8	NE corner of Alabama St. & Orange Av.	Condo/Townhomes	77	DU	5	28	34	27	13	40	447
9	NE corner of Orange Av. & Kansas St.	Senior Adult Housing-Attached	160	DU	8	13	21	16	10	26	557
10	East side of Alessandro, North of Sunset Hills Ln.	SFDR	27	DU	5	15	20	17	10	27	258
11	Redlands Distribution Center Buildings 9 & 10 (Prologis) - Buckeye St. between Pioneer Av., Palmetto Av. and Riverbluff Av.	High-Cube Warehouse	1,343.426	TSF							
		Passenger Cars			64	32	96	32	75	107	1,539
		Truck Trips									
		2-Axle PCE (1.5)			*4*	*2*	*6*	*2*	*5*	*7*	*100*
		3-Axle PCE (2.0)			*7*	*4*	*11*	*4*	*9*	*12*	*180*
		4+-Axle PCE (3.0)			*30*	*15*	*45*	*15*	*35*	*50*	*716*
		Net Truck Trips (PCE)			41	21	62	21	48	69	996
	Subtotal #11 (Vehicles)				**106**	**53**	**158**	**53**	**123**	**176**	**2,535**
12	Redlands Crossing Shopping Center - SE corner of Tennessee St. & San Bernardino Av.	Discount Superstore	215.000	TSF	202	157	359	486	505	991	11,423
		Specialty Retail	25.700	TSF	16	10	26	31	39	70	1,139
		High-Turnover (Sit-Down) Restaurant	9.000	TSF	54	50	104	59	41	100	1,144
		Fast-Food Restaurant w/o Drive-Thru	12.300	TSF	324	216	540	164	158	322	8,807
		Fast-Food Restaurant with Drive-Thru	10.500	TSF	264	254	518	185	171	355	5,209
		Gas Station w/ Food Mart & Car Wash	12	VFP	73	70	143	85	82	167	1,834
		Internal Capture Reduction (10%)			-76	-76	-152	-97	-97	-194	-2,956
		Pass-by Reduction			-158	-151	-309	-215	-195	-410	-7,120
	Subtotal #12 (Vehicles)				**699**	**529**	**1,228**	**698**	**703**	**1,402**	**19,481**
13	SW corner of Tennessee St. & Lugonia Av.	Specialty Retail	8.048	TSF	5	3	8	10	12	22	357
14	South of Redlands Blvd., west of Kansas St.	Self-Service Car Wash	7	STALLS	0	0	0	20	19	39	756
15	708 Brookside Ave.	General Office	7.000	TSF	20	3	22	15	72	87	172
16	520 Brookside Ave.	Church	15.107	TSF	5	3	8	4	4	8	138
17	Watson Land - North of San Bernardino Av., east of #31	High-Cube Warehouse	578.400	TSF							
		Passenger Cars			28	14	41	14	32	46	663
		Truck Trips									
		2-Axle PCE (1.5)			*2*	*1*	*3*	*1*	*2*	*3*	*43*
		3-Axle PCE (2.0)			*3*	*2*	*5*	*2*	*4*	*5*	*77*
		4+-Axle PCE (3.0)			*13*	*6*	*19*	*6*	*15*	*21*	*308*
		Net Truck Trips (PCE)			18	9	27	9	21	30	429
	Subtotal #17 (Vehicles)				**45**	**23**	**68**	**23**	**53**	**76**	**1,091**
18	NE corner of Texas St. & Pioneer Av.	SFDR	12	DU	2	7	9	8	4	12	115
19	South of I-10, west of Eureka St.	Specialty Retail	150.300	TSF	92	59	150	179	228	407	6,661
20	South of Pearl Ave., between Eureka St. & Third St.	Specialty Retail	18.200	TSF	11	7	18	22	28	49	807
21	500 East Citrus Ave.	Recreational Community Center	21.000	TSF	21	13	34	11	19	30	480

Table 4.1-2 (Page 2 of 4)

Cumulative Development Weekday Trip Generation

#	Project/Location	Land Use[1]	Quantity	Units[2]	AM Peak Hour In	AM Peak Hour Out	AM Peak Hour Total	PM Peak Hour In	PM Peak Hour Out	PM Peak Hour Total	Weekday Daily
22	SE corner of Lugonia Av. & Orange St.	Specialty Retail	6.750	TSF	4	3	7	8	10	18	299
23	1135 Orange St.	Specialty Retail	3.243	TSF	2	1	3	4	5	9	144
24	SW corner of Lugonia Av. & Church St.	Condo/Townhomes	37	DU	3	14	16	13	6	19	215
25	SE corner of Lugonia Av. & Occidental	SFDR	12	DU	2	7	9	8	4	12	115
26	South of San Bernardino Av., west of Grove St.	SFDR	10	DU	2	6	8	6	4	10	96
27	East of Deanna Wy., between San Bernardino Av. & Pioneer Av.	SFDR	26	DU	5	15	20	17	10	26	249
28	North of San Bernardino Av., west of Judson St.	SFDR	74	DU	14	41	56	47	27	75	708
29	SE corner of Pioneer Av. & Judson St.	SFDR	33	DU	6	18	25	21	12	33	316
30	Redlands Distribution Facility (Lytle Development) - SE corner of Nevada St. & Almond Av.	High-Cube Warehouse	425.000	TSF							
		Passenger Cars			20	10	30	10	24	34	487
		Truck Trips									
		2-Axle PCE (1.5)			*1*	*1*	*2*	*1*	*2*	*2*	*32*
		3-Axle PCE (2.0)			*2*	*1*	*4*	*1*	*3*	*4*	*57*
		4+-Axle PCE (3.0)			*9*	*5*	*14*	*5*	*11*	*16*	*226*
		Net Truck Trips (PCE)			13	7	20	7	15	22	315
	Subtotal #30 (Vehicles)				**33**	**17**	**50**	**17**	**39**	**56**	**802**
31	Watson Lane - North of San Bernardino Av., east of California St.	High-Cube Warehouse	377.692	TSF							
		Passenger Cars			18	9	27	9	21	30	433
		Truck Trips									
		2-Axle PCE (1.5)			*1*	*1*	*2*	*1*	*1*	*2*	*28*
		3-Axle PCE (2.0)			*2*	*1*	*3*	*1*	*2*	*4*	*50*
		4+-Axle PCE (3.0)			*8*	*4*	*13*	*4*	*10*	*14*	*201*
		Net Truck Trips (PCE)			12	6	17	6	14	19	280
	Subtotal #31 (Vehicles)				**30**	**15**	**45**	**15**	**35**	**49**	**713**
32	121 SFDR Housing Gated Community	SFDR	121	DU	23	68	91	77	45	122	1,158
33	CUP No. 10-04	General Light Industrial	42.005	TSF	34	5	39	5	36	41	293
34	CUP No. 10-02	Self-Service Car Wash	3	STALLS	0	0	0	8	8	17	324
35	Oakmont - North of Palmetto Av., between Nevada St. & Alabama St.	High-Cube Warehouse	530.111	TSF							
		Passenger Cars			25	13	38	13	30	42	607
		Truck Trips									
		2-Axle PCE (1.5)			*2*	*1*	*2*	*1*	*2*	*3*	*40*
		3-Axle PCE (2.0)			*3*	*1*	*4*	*1*	*3*	*5*	*71*
		4+-Axle PCE (3.0)			*12*	*6*	*18*	*6*	*14*	*20*	*282*
		Net Truck Trips (PCE)			16	8	25	8	19	27	393
	Subtotal #35 (Vehicles)				**42**	**21**	**63**	**21**	**49**	**69**	**1,000**
36	Mountain Grove - SE corner of San Bernardino Av. & Alabama St.	Shopping Center	1,850.000	TSF	518	333	851	2,202	2,294	4,496	45,251
		Pass-by (34% PM)			*0*	*0*	*0*	*-674*	*-702*	*-1,376*	*-13,847*
		Apartments	281	DU	28	115	143	112	62	174	1,869
		Hotel	200	RMS	68	44	112	62	56	118	1,634
		Theatre (With ULI adjustment %)	3,544	SEATS	0	0	0	461	669	1,134	6,237
		Internal Capture Reduction (10%)			-61	-49	-111	-284	-308	-592	-5,499
	Subtotal # 36				**553**	**443**	**996**	**1,879**	**2,071**	**3,954**	**35,645**

Table 4.1-2 (Page 3 of 4)

Cumulative Development Weekday Trip Generation

#	Project/Location	Land Use[1]	Quantity	Units[2]	AM Peak Hour In	AM Peak Hour Out	AM Peak Hour Total	PM Peak Hour In	PM Peak Hour Out	PM Peak Hour Total	Weekday Daily
37	Stone Creek - NW corner of Almond Av. and Alabama St.	Specialty Retail	52.500	TSF	32	20	53	62	80	142	2,327
		High-Turnover (Sit-Down) Restaurant	15.000	TSF	90	83	173	99	69	167	1,907
		Pass-by (43%)			*0*	*0*	*0*	*-36*	*-36*	*-72*	*-820*
		General Office	149.000	TSF	226	31	258	42	204	246	1,813
		Hotel	180	RMS	61	40	101	56	50	106	1,471
	Subtotal # 37				**410**	**174**	**584**	**223**	**367**	**590**	**6,698**
38	Almond Avenue Industrial Project (Newcastle) - SW corner of Nevada St. & Almond Av.	High-Cube Warehouse	425.940	TSF							
		Passenger Cars			20	10	31	10	24	34	488
		Truck Trips									
		2-Axle PCE (1.5)			*1*	*1*	*2*	*1*	*2*	*2*	*32*
		3-Axle PCE (2.0)			*2*	*1*	*4*	*1*	*3*	*4*	*57*
		4+-Axle PCE (3.0)			*9*	*5*	*14*	*5*	*11*	*16*	*227*
		Net Truck Trips (PCE)			13	7	20	7	15	22	316
	Subtotal #38 (Vehicles)				**33**	**17**	**50**	**17**	**39**	**56**	**804**
39	NE corner of Orange St. & Lugonia Av.	SFDR	228	DU	43	128	171	146	84	230	2,182
40	1020-1050 Nevada	Industrial Park	63.638	TSF	44	10	53	11	43	55	443
41	Madeira Ave., west of Sapphire	SFDR	27	DU	5	15	20	17	10	27	258
42	Center St., east of Burke St.	SFDR	15	DU	3	8	11	10	6	15	144
43	SW corner of San Bernardino Av. & Wabash Av.	SFDR	76	DU	14	43	57	49	28	77	727
44	SE corner of Grove St. & Sylvan Blvd.	Condo/Townhomes	40	DU	3	15	18	14	7	21	232
45	SE corner of Citrus Av. & Iowa St.	Industrial Park	141.000	TSF	97	21	118	25	96	121	981
46	Santa Fe Depot	Specialty Retail	2.554	TSF	2	1	3	3	4	7	113
		Fast-Food Restaurant with Drive-Thru	3.105	TSF	78	75	153	55	50	105	1,540
	Subtotal # 46				**80**	**76**	**156**	**58**	**54**	**112**	**1,654**
47	Greenspot Village & Marketplace CMP	Planning Area 1 (Commercial)									
		Superstore	200.000	TSF	188	146	334	452	470	922	10,626
		Anchor Retail	355.000	TSF	199	128	327	728	760	1,487	15,474
		Gas Station w/ Convenience Market	3.600	TSF	146	140	285	175	175	349	3,495
		Bank with Drive-Thru	10.000	TSF	69	54	124	129	129	258	1,482
		Fast-Food Restaurant with Drive-Thru	12.000	TSF	302	290	592	211	195	406	5,953
		High-Turnover (Sit-Down) Restaurant	25.000	TSF	485	466	952	582	582	1,165	11,650
		Sit-Down Restaurants	40.000	TSF	16	16	32	201	99	300	3,598
		Planning Area 1 Subtotal			1,018	967	1,985	1,298	1,180	2,478	26,177
		Pass-by (25% of Commercial only)			*-248*	*-248*	*-496*	*-310*	*-310*	*-620*	*-5,235*
		Planning Area 1 Total			**770**	**719**	**1,489**	**989**	**870**	**1,859**	**20,942**
		Planning Area 2 (Residential)									
		Apartments	378	DU	38	155	193	151	83	234	2,514
		Condo/Townhomes	172	DU	12	64	76	60	29	89	999
		Planning Area 2 Total			**50**	**219**	**268**	**211**	**112**	**324**	**3,513**
		Planning Area 3 (Village Center - Mixed Use)									
		Daycare	7.000	TSF	46	40	86	41	46	87	555
		Shopping Center	80.000	TSF	82	53	135	269	279	548	5,874
		Sit-Down Restaurants	7.000	TSF	3	3	6	35	17	52	630
		Planning Area 3 (Commercial Only) Subtotal			131	96	227	345	343	688	7,059
		Pass-by (25% of Commercial only)			*-28*	*-28*	*-57*	*-86*	*-86*	*-172*	*-1,412*
		ing Area 3 (Commercial only) Total (After Pass-by Reduction)			*102*	*68*	*170*	*259*	*257*	*516*	*5,647*
		Hotel (includes 20 TSF Conference Cent	240	RMS	82	53	134	74	67	142	1,961
		General Office	60.000	TSF	110	15	125	25	121	146	900
		Apartments	172	DU	17	71	88	69	38	107	1,144
		Condo/Townhomes	78	DU	5	29	34	27	13	41	453
		Planning Area 3 Total			**316**	**235**	**551**	**454**	**496**	**950**	**10,105**
		Total Commercial			873	786	1,659	1,248	1,127	2,374	26,589
		Total Residential			73	318	391	308	164	471	5,110
		Total Office			110	15	125	25	121	146	900
		Project Trips Subtotal			1,055	1,119	2,174	1,580	1,412	2,991	32,599
		Total Internal Capture (13%)			*-184*	*-146*	*-330*	*-201*	*-184*	*-385*	*-4,238*
	Subtotal #47 (Net Project External Trips)				***871***	***974***	***1,845***	***1,379***	***1,228***	***2,607***	***28,361***

Table 4.1-2 (Page 4 of 4)

Cumulative Development Weekday Trip Generation

#	Project/Location	Land Use[1]	Quantity	Units[2]	AM Peak Hour In	AM Peak Hour Out	AM Peak Hour Total	PM Peak Hour In	PM Peak Hour Out	PM Peak Hour Total	Weekday Daily
48	1222 Indiana Ct.	General Light Industrial	5.550	TSF	4	1	5	1	5	5	39
49	NE corner of Ford St. & Patricia	Church	20.500	TSF	7	4	11	5	6	11	187
50	NE corner of Wabash Av. & Nice Av.	Mini-Warehouse	60.857	TSF	15	4	18	8	8	16	152
		General Light Industrial	48.045	TSF	39	5	44	6	41	47	335
	Subtotal # 50				**54**	**9**	**62**	**14**	**49**	**62**	**487**
51	North of Palmetto Av., west of Alabama St.	High-Cube Warehouse	275.000	TSF							
		Passenger Cars			13	7	20	7	15	22	315
		Truck Trips									
		2-Axle PCE (1.5)			*1*	*0*	*1*	*0*	*1*	*1*	*21*
		3-Axle PCE (2.0)			*2*	*1*	*2*	*1*	*2*	*3*	*37*
		4+-Axle PCE (3.0)			*6*	*3*	*9*	*3*	*7*	*10*	*146*
		Net Truck Trips (PCE)			8	4	13	4	10	14	204
	Subtotal #51 (Vehicles)				**22**	**11**	**32**	**11**	**25**	**36**	**519**
52	Regency Center	Fast-Food Restaurant with Drive-Thru	3.417	TSF	86	83	169	60	55	116	1,695
		Pass-by (25%)			*-21*	*-21*	*-42*	*-14*	*-14*	*-29*	*-424*
		Shopping Center	42.840	TSF	57	36	93	177	184	360	3,914
		Pass-by (25%)			*-12*	*-12*	*-23*	*-45*	*-45*	*-90*	*-979*
	Subtotal # 52				**110**	**86**	**197**	**177**	**180**	**357**	**4,207**
53	Nevada St. & Palmetto Ave. (Newcastle)	High-Cube Warehouse	400.000	TSF							
		Passenger Cars			19	10	29	10	22	32	458
		Truck Trips									
		2-Axle PCE (1.5)			*1*	*1*	*2*	*1*	*1*	*2*	*30*
		3-Axle PCE (2.0)			*2*	*1*	*3*	*1*	*3*	*4*	*53*
		4+-Axle PCE (3.0)			*9*	*4*	*13*	*4*	*10*	*15*	*213*
		Net Truck Trips (PCE)			12	6	19	6	14	21	296
	Subtotal #53 (Vehicles)				**31**	**16**	**47**	**16**	**37**	**52**	**755**
54	Jack in the Box Center	Fast-Food Restaurant with Drive-Thru	6.280	TSF	158	152	310	111	102	213	3,116
		Pass-by (40%)			*-62*	*-62*	*-124*	*-43*	*-43*	*-85*	*-1,246*
		Shopping Center	7.065	TSF	4	3	7	13	13	26	303
		Pass-by (20%)			*-1*	*-1*	*-1*	*-3*	*-3*	*-5*	*-61*
		Retail	13.771	TSF	8	5	14	25	26	51	591
		Pass-by (35%)			*-2*	*-2*	*-5*	*-9*	*-9*	*-18*	*-207*
	Subtotal # 54				**106**	**95**	**201**	**95**	**87**	**182**	**2,496**
55	133 SFD Housing (SE corner of Orange St. & Greenspot Rd.)	SFDR	133	DU	25	74	100	85	49	134	1,273
56	Blossom Trails	SFDR	14	DU	3	8	11	9	5	14	134
		Condo/Townhomes	306	DU	21	113	135	107	52	159	1,778
	Subtotal # 56				**24**	**121**	**145**	**116**	**57**	**173**	**1,912**
57	Rossmore Enterprises - SE corner of Alabama St. & Pioneer Av.	High-Cube Warehouse	594.415	TSF							
		Passenger Cars			28	14	43	14	33	47	681
		Truck Trips									
		2-Axle PCE (1.5)			*2*	*1*	*3*	*1*	*2*	*3*	*44*
		3-Axle PCE (2.0)			*3*	*2*	*5*	*2*	*4*	*6*	*79*
		4+-Axle PCE (3.0)			*13*	*7*	*20*	*7*	*15*	*22*	*317*
		Net Truck Trips (PCE)			18	9	28	9	21	31	440
	Subtotal #57 (Vehicles)				**47**	**23**	**70**	**23**	**55**	**78**	**1,122**
GRAND TOTAL					**5,110**	**3,665**	**8,774**	**6,240**	**7,692**	**13,935**	**149,858**

[1] SFDR = Single Family Detached Residential

[2] DU = Dwelling Units; TSF = Thousand Square Feet; VFP = Vehicle Fueling Position

This Page Intentionally Left Blank

APPENDIX 5.1

Existing Plus Ambient Growth (2014) Conditions
Intersection Operations Analysis Worksheets

UNIVERISTY CROSSINGS APARTMENTS TRAFFIC IMPACT ANALYSIS (JN 08139)
Existing Plus Ambient 2014 Conditions
AM PEAK HOUR

Level Of Service Computation Report
2000 HCM Operations Method (Future Volume Alternative)

Intersection #1 California Street / Lugonia Avenue

Cycle (sec): 85 Critical Vol./Cap.(X): 0.345
Loss Time (sec): 6 Average Delay (sec/veh): 20.2
Optimal Cycle: OPTIMIZED Level Of Service: C

Approach:	North Bound			South Bound			East Bound			West Bound		
Movement:	L - T - R			L - T - R			L - T - R			L - T - R		
Control:	Permitted			Permitted			Split Phase			Split Phase		
Rights:	Include			Include			Include			Include		
Min. Green:	10	10	10	28	28	28	30	30	30	10	10	10
Y+R:	4.0	4.0	4.0	4.0	4.0	4.0	4.0	4.0	4.0	4.0	4.0	4.0
Lanes:	1 0	1 0	1	1 0	2 0	1	0 1	0 0	1	0 0	1! 0	0
Volume Module:												
Base Vol:	190	357	123	13	201	9	2	10	38	37	68	27
Growth Adj:	1.04	1.04	1.04	1.04	1.04	1.04	1.04	1.04	1.04	1.04	1.04	1.04
Initial Bse:	198	371	128	14	209	9	2	10	40	38	71	28
Added Vol:	0	0	0	0	0	0	0	0	0	0	0	0
PasserByVol:	0	0	0	0	0	0	0	0	0	0	0	0
Initial Fut:	198	371	128	14	209	9	2	10	40	38	71	28
User Adj:	1.00	1.00	1.00	1.00	1.00	1.00	1.00	1.00	1.00	1.00	1.00	1.00
PHF Adj:	0.92	0.92	0.92	0.92	0.92	0.92	0.92	0.92	0.92	0.92	0.92	0.92
PHF Volume:	215	404	139	15	228	10	2	11	43	42	77	31
Reduct Vol:	0	0	0	0	0	0	0	0	0	0	0	0
Reduced Vol:	215	404	139	15	228	10	2	11	43	42	77	31
PCE Adj:	1.00	1.00	1.00	1.00	1.00	1.00	1.00	1.00	1.00	1.00	1.00	1.00
MLF Adj:	1.00	1.00	1.00	1.00	1.00	1.00	1.00	1.00	1.00	1.00	1.00	1.00
FinalVolume:	215	404	139	15	228	10	2	11	43	42	77	31
Saturation Flow Module:												
Sat/Lane:	1800	1800	1800	1800	1800	1800	1800	1800	1800	1800	1800	1800
Adjustment:	0.55	1.00	0.85	0.32	1.00	0.85	0.94	0.99	0.85	0.91	0.96	0.96
Lanes:	1.00	1.00	1.00	1.00	2.00	1.00	0.17	0.83	1.00	0.29	0.51	0.20
Final Sat.:	994	1800	1530	576	3600	1530	295	1474	1530	476	874	347
Capacity Analysis Module:												
Vol/Sat:	0.22	0.22	0.09	0.03	0.06	0.01	0.01	0.01	0.03	0.09	0.09	0.09
Crit Moves:		****						****		****		
Green/Cycle:	0.41	0.41	0.41	0.41	0.41	0.41	0.35	0.35	0.35	0.16	0.16	0.16
Volume/Cap:	0.52	0.54	0.22	0.06	0.15	0.02	0.02	0.02	0.08	0.54	0.54	0.54
Delay/Veh:	19.8	19.6	16.2	15.1	15.6	14.7	17.9	17.9	18.4	34.9	34.9	34.9
User DelAdj:	1.00	1.00	1.00	1.00	1.00	1.00	1.00	1.00	1.00	1.00	1.00	1.00
AdjDel/Veh:	19.8	19.6	16.2	15.1	15.6	14.7	17.9	17.9	18.4	34.9	34.9	34.9
LOS by Move:	B	B	B	B	B	B	B	B	B	C	C	C
HCM2kAvgQ:	5	8	2	0	2	0	0	0	1	4	4	4

Note: Queue reported is the number of cars per lane.

Traffix 8.0.0715 (c) 2008 Dowling Assoc. Licensed to URBAN CROSSROADS, IRVINE

UNIVERISTY CROSSINGS APARTMENTS TRAFFIC IMPACT ANALYSIS (JN 08139)
Existing Plus Ambient 2014 Conditions
AM PEAK HOUR

Level Of Service Computation Report
2000 HCM 4-Way Stop Method (Future Volume Alternative)

Intersection #2 Nevada Street / Lugonia Avenue

Cycle (sec):	0	Critical Vol./Cap.(X):	0.468
Loss Time (sec):	0	Average Delay (sec/veh):	11.5
Optimal Cycle:	0	Level Of Service:	B

Approach:	North Bound				South Bound				East Bound				West Bound			
Movement:	L	- T	- R		L	- T	- R		L	- T	- R		L	- T	- R	
Control:	Stop Sign				Stop Sign				Stop Sign				Stop Sign			
Rights:	Include				Include				Include				Include			
Min. Green:	0	0	0		0	0	0		0	0	0		0	0	0	
Lanes:	0	1	0	0 1	0	0	1!	0 0	0	1	0	0 1	0	0	1!	0 0
Volume Module:																
Base Vol:	34	82	26		8	122	13		12	50	30		89	120	11	
Growth Adj:	1.04	1.04	1.04		1.04	1.04	1.04		1.04	1.04	1.04		1.04	1.04	1.04	
Initial Bse:	35	85	27		8	127	14		12	52	31		93	125	11	
Added Vol:	0	0	0		0	0	0		0	0	0		0	0	0	
PasserByVol:	0	0	0		0	0	0		0	0	0		0	0	0	
Initial Fut:	35	85	27		8	127	14		12	52	31		93	125	11	
User Adj:	1.00	1.00	1.00		1.00	1.00	1.00		1.00	1.00	1.00		1.00	1.00	1.00	
PHF Adj:	0.81	0.81	0.81		0.81	0.81	0.81		0.81	0.81	0.81		0.81	0.81	0.81	
PHF Volume:	44	105	33		10	157	17		15	64	39		114	154	14	
Reduct Vol:	0	0	0		0	0	0		0	0	0		0	0	0	
Reduced Vol:	44	105	33		10	157	17		15	64	39		114	154	14	
PCE Adj:	1.00	1.00	1.00		1.00	1.00	1.00		1.00	1.00	1.00		1.00	1.00	1.00	
MLF Adj:	1.00	1.00	1.00		1.00	1.00	1.00		1.00	1.00	1.00		1.00	1.00	1.00	
FinalVolume:	44	105	33		10	157	17		15	64	39		114	154	14	
Saturation Flow Module:																
Adjustment:	1.00	1.00	1.00		1.00	1.00	1.00		1.00	1.00	1.00		1.00	1.00	1.00	
Lanes:	0.29	0.71	1.00		0.06	0.85	0.09		0.19	0.81	1.00		0.40	0.55	0.05	
Final Sat.:	166	400	652		33	496	53		109	453	642		244	329	30	
Capacity Analysis Module:																
Vol/Sat:	0.26	0.26	0.05		0.32	0.32	0.32		0.14	0.14	0.06		0.47	0.47	0.47	
Crit Moves:		****				****				****					****	
Delay/Veh:	10.7	10.7	8.1		11.4	11.4	11.4		9.6	9.6	8.2		13.4	13.4	13.4	
Delay Adj:	1.00	1.00	1.00		1.00	1.00	1.00		1.00	1.00	1.00		1.00	1.00	1.00	
AdjDel/Veh:	10.7	10.7	8.1		11.4	11.4	11.4		9.6	9.6	8.2		13.4	13.4	13.4	
LOS by Move:	B	B	A		B	B	B		A	A	A		B	B	B	
ApproachDel:		10.2				11.4				9.2				13.4		
Delay Adj:		1.00				1.00				1.00				1.00		
ApprAdjDel:		10.2				11.4				9.2				13.4		
LOS by Appr:		B				B				A				B		
AllWayAvgQ:	0.3	0.3	0.0		0.4	0.4	0.4		0.1	0.1	0.1		0.8	0.8	0.8	

Note: Queue reported is the number of cars per lane.

Traffix 8.0.0715 (c) 2008 Dowling Assoc. Licensed to URBAN CROSSROADS, IRVINE

UNIVERISTY CROSSINGS APARTMENTS TRAFFIC IMPACT ANALYSIS (JN 08139)
Existing Plus Ambient 2014 Conditions
AM PEAK HOUR

Level Of Service Computation Report
2000 HCM Operations Method (Future Volume Alternative)

Intersection #5 Alabama Street / Lugonia Avenue

Cycle (sec): 75 Critical Vol./Cap.(X): 0.326
Loss Time (sec): 8 Average Delay (sec/veh): 23.4
Optimal Cycle: OPTIMIZED Level Of Service: C

Approach:	North Bound			South Bound			East Bound			West Bound		
Movement:	L - T - R			L - T - R			L - T - R			L - T - R		
Control:	Protected			Protected			Protected			Protected		
Rights:	Include			Include			Include			Include		
Min. Green:	10	20	20	10	20	20	10	24	24	10	24	24
Y+R:	4.0	4.0	4.0	4.0	4.0	4.0	4.0	4.0	4.0	4.0	4.0	4.0
Lanes:	1 0	2 0	1	1 0	3 0	1	1 0	1 1	0	1 0	2 0	1
Volume Module:												
Base Vol:	87	284	141	43	335	57	42	80	35	159	203	30
Growth Adj:	1.04	1.04	1.04	1.04	1.04	1.04	1.04	1.04	1.04	1.04	1.04	1.04
Initial Bse:	91	295	147	45	349	59	44	83	36	165	211	31
Added Vol:	0	0	0	0	0	0	0	0	0	0	0	0
PasserByVol:	0	0	0	0	0	0	0	0	0	0	0	0
Initial Fut:	91	295	147	45	349	59	44	83	36	165	211	31
User Adj:	1.00	1.00	1.00	1.00	1.00	1.00	1.00	1.00	1.00	1.00	1.00	1.00
PHF Adj:	0.90	0.90	0.90	0.90	0.90	0.90	0.90	0.90	0.90	0.90	0.90	0.90
PHF Volume:	101	329	164	50	389	66	49	93	41	184	235	35
Reduct Vol:	0	0	0	0	0	0	0	0	0	0	0	0
Reduced Vol:	101	329	164	50	389	66	49	93	41	184	235	35
PCE Adj:	1.00	1.00	1.00	1.00	1.00	1.00	1.00	1.00	1.00	1.00	1.00	1.00
MLF Adj:	1.00	1.00	1.00	1.00	1.00	1.00	1.00	1.00	1.00	1.00	1.00	1.00
FinalVolume:	101	329	164	50	389	66	49	93	41	184	235	35
Saturation Flow Module:												
Sat/Lane:	1800	1800	1800	1800	1800	1800	1800	1800	1800	1800	1800	1800
Adjustment:	0.90	1.00	0.85	0.90	1.00	0.85	0.90	0.95	0.95	0.90	1.00	0.85
Lanes:	1.00	2.00	1.00	1.00	3.00	1.00	1.00	1.39	0.61	1.00	2.00	1.00
Final Sat.:	1615	3600	1530	1615	5400	1530	1615	2389	1045	1615	3600	1530
Capacity Analysis Module:												
Vol/Sat:	0.06	0.09	0.11	0.03	0.07	0.04	0.03	0.04	0.04	0.11	0.07	0.02
Crit Moves:			****	****				****		****		
Green/Cycle:	0.13	0.27	0.27	0.13	0.27	0.27	0.15	0.32	0.32	0.17	0.35	0.35
Volume/Cap:	0.47	0.34	0.40	0.23	0.27	0.16	0.21	0.12	0.12	0.66	0.19	0.07
Delay/Veh:	31.7	22.4	23.2	29.6	21.8	21.3	28.7	18.1	18.1	34.6	17.1	16.4
User DelAdj:	1.00	1.00	1.00	1.00	1.00	1.00	1.00	1.00	1.00	1.00	1.00	1.00
AdjDel/Veh:	31.7	22.4	23.2	29.6	21.8	21.3	28.7	18.1	18.1	34.6	17.1	16.4
LOS by Move:	C	C	C	C	C	C	C	B	B	C	B	B
HCM2kAvgQ:	3	3	3	1	2	1	1	1	1	5	2	1

Note: Queue reported is the number of cars per lane.

Traffix 8.0.0715 (c) 2008 Dowling Assoc. Licensed to URBAN CROSSROADS, IRVINE

Movement	EBL	EBT	EBR	WBL	WBT	WBR	NBL	NBT	NBR	SBL	SBT	SBR
Lane Configurations												
Volume (vph)	0	0	0	253	306	272	361	476	0	0	347	162
Ideal Flow (vphpl)	1900	1900	1900	1900	1900	1900	1900	1900	1900	1900	1900	1900
Total Lost time (s)					5.0		4.0	5.0			5.0	
Lane Util. Factor					0.95		1.00	0.95			0.95	
Frpb, ped/bikes					0.99		1.00	1.00			1.00	
Flpb, ped/bikes					1.00		1.00	1.00			1.00	
Frt					0.95		1.00	1.00			0.95	
Flt Protected					0.99		0.95	1.00			1.00	
Satd. Flow (prot)					3361		1805	3610			3438	
Flt Permitted					0.99		0.95	1.00			1.00	
Satd. Flow (perm)					3361		1805	3610			3438	
Peak-hour factor, PHF	0.92	0.92	0.92	0.92	0.92	0.92	0.92	0.92	0.92	0.92	0.92	0.92
Adj. Flow (vph)	0	0	0	275	333	296	392	517	0	0	377	176
RTOR Reduction (vph)	0	0	0	0	59	0	0	0	0	0	53	0
Lane Group Flow (vph)	0	0	0	0	845	0	392	517	0	0	500	0
Confl. Peds. (#/hr)						5						
Heavy Vehicles (%)	0%	0%	0%	0%	0%	0%	0%	0%	0%	0%	0%	0%
Turn Type				Split			Prot					
Protected Phases				4	4		1	6			2	
Permitted Phases												
Actuated Green, G (s)					23.0		24.8	67.0			38.2	
Effective Green, g (s)					23.0		24.8	67.0			38.2	
Actuated g/C Ratio					0.23		0.25	0.67			0.38	
Clearance Time (s)					5.0		4.0	5.0			5.0	
Vehicle Extension (s)					2.0		2.0	2.0			2.0	
Lane Grp Cap (vph)					773		448	2419			1313	
v/s Ratio Prot					c0.25		c0.22	0.14			c0.15	
v/s Ratio Perm												
v/c Ratio					1.09		0.88	0.21			0.38	
Uniform Delay, d1					38.5		36.1	6.4			22.4	
Progression Factor					1.00		1.04	1.33			1.00	
Incremental Delay, d2					60.6		16.0	0.2			0.8	
Delay (s)					99.1		53.4	8.7			23.2	
Level of Service					F		D	A			C	
Approach Delay (s)		0.0			99.1			27.9			23.2	
Approach LOS		A			F			C			C	

Intersection Summary			
HCM Average Control Delay	54.0	HCM Level of Service	D
HCM Volume to Capacity ratio	0.71		
Actuated Cycle Length (s)	100.0	Sum of lost time (s)	14.0
Intersection Capacity Utilization	71.1%	ICU Level of Service	C
Analysis Period (min)	15		
c Critical Lane Group			

Movement	EBL	EBT	EBR	WBL	WBT	WBR	NBL	NBT	NBR	SBL	SBT	SBR
Lane Configurations												
Volume (vph)	220	1	388	0	0	0	0	617	127	51	569	0
Ideal Flow (vphpl)	1900	1900	1900	1900	1900	1900	1900	1900	1900	1900	1900	1900
Total Lost time (s)		5.0						5.0	5.0	4.0	5.0	
Lane Util. Factor		0.95						0.95	1.00	1.00	0.95	
Frpb, ped/bikes		1.00						1.00	0.98	1.00	1.00	
Flpb, ped/bikes		1.00						1.00	1.00	1.00	1.00	
Frt		0.90						1.00	0.85	1.00	1.00	
Flt Protected		0.98						1.00	1.00	0.95	1.00	
Satd. Flow (prot)		3207						3610	1581	1805	3610	
Flt Permitted		0.98						1.00	1.00	0.95	1.00	
Satd. Flow (perm)		3207						3610	1581	1805	3610	
Peak-hour factor, PHF	0.94	0.94	0.94	0.94	0.94	0.94	0.94	0.94	0.94	0.94	0.94	0.94
Adj. Flow (vph)	234	1	413	0	0	0	0	656	135	54	605	0
RTOR Reduction (vph)	0	251	0	0	0	0	0	0	50	0	0	0
Lane Group Flow (vph)	0	397	0	0	0	0	0	656	85	54	605	0
Confl. Peds. (#/hr)									5			
Heavy Vehicles (%)	0%	0%	0%	0%	0%	0%	0%	0%	0%	0%	0%	0%
Turn Type	Split								Perm	Prot		
Protected Phases	8	8						6		5	2	
Permitted Phases									6			
Actuated Green, G (s)		16.7						62.8	62.8	6.5	73.3	
Effective Green, g (s)		16.7						62.8	62.8	6.5	73.3	
Actuated g/C Ratio		0.17						0.63	0.63	0.06	0.73	
Clearance Time (s)		5.0						5.0	5.0	4.0	5.0	
Vehicle Extension (s)		2.0						2.0	2.0	2.0	2.0	
Lane Grp Cap (vph)		536						2267	993	117	2646	
v/s Ratio Prot		c0.12						c0.18		c0.03	0.17	
v/s Ratio Perm									0.05			
v/c Ratio		0.74						0.29	0.09	0.46	0.23	
Uniform Delay, d1		39.6						8.5	7.3	45.1	4.3	
Progression Factor		1.00						1.00	1.00	0.95	0.16	
Incremental Delay, d2		4.8						0.3	0.2	0.8	0.1	
Delay (s)		44.4						8.8	7.5	43.6	0.8	
Level of Service		D						A	A	D	A	
Approach Delay (s)		44.4			0.0			8.6			4.3	
Approach LOS		D			A			A			A	

Intersection Summary			
HCM Average Control Delay	18.3	HCM Level of Service	B
HCM Volume to Capacity ratio	0.39		
Actuated Cycle Length (s)	100.0	Sum of lost time (s)	14.0
Intersection Capacity Utilization	71.1%	ICU Level of Service	C
Analysis Period (min)	15		
c Critical Lane Group			

UNIVERISTY CROSSINGS APARTMENTS TRAFFIC IMPACT ANALYSIS (JN 08139)
Existing Plus Ambient 2014 Conditions
AM PEAK HOUR

Level Of Service Computation Report
2000 HCM Operations Method (Future Volume Alternative)

Intersection #8 Alabama Street / Redlands Boulevard

Cycle (sec): 90 Critical Vol./Cap.(X): 0.589
Loss Time (sec): 8 Average Delay (sec/veh): 31.3
Optimal Cycle: OPTIMIZED Level Of Service: C

Approach:	North Bound			South Bound			East Bound			West Bound		
Movement:	L - T	- R		L - T	- R		L - T	- R		L - T	- R	
Control:	Split Phase			Split Phase			Protected			Protected		
Rights:	Include			Include			Include			Include		
Min. Green:	25	25	25	25	25	25	10	23	23	10	23	23
Y+R:	4.0	4.0	4.0	4.0	4.0	4.0	4.0	4.0	4.0	4.0	4.0	4.0
Lanes:	1 0	1	1 0	1 0	1	1 0	1 0	2	0 1	1 0	2	0 1
Volume Module:												
Base Vol:	69	460	40	84	459	160	106	164	30	43	278	93
Growth Adj:	1.04	1.04	1.04	1.04	1.04	1.04	1.04	1.04	1.04	1.04	1.04	1.04
Initial Bse:	72	479	42	87	478	166	110	171	31	45	289	97
Added Vol:	0	0	0	0	0	0	0	0	0	0	0	0
PasserByVol:	0	0	0	0	0	0	0	0	0	0	0	0
Initial Fut:	72	479	42	87	478	166	110	171	31	45	289	97
User Adj:	1.00	1.00	1.00	1.00	1.00	1.00	1.00	1.00	1.00	1.00	1.00	1.00
PHF Adj:	0.90	0.90	0.90	0.90	0.90	0.90	0.90	0.90	0.90	0.90	0.90	0.90
PHF Volume:	80	534	46	98	533	186	123	190	35	50	323	108
Reduct Vol:	0	0	0	0	0	0	0	0	0	0	0	0
Reduced Vol:	80	534	46	98	533	186	123	190	35	50	323	108
PCE Adj:	1.00	1.00	1.00	1.00	1.00	1.00	1.00	1.00	1.00	1.00	1.00	1.00
MLF Adj:	1.00	1.00	1.00	1.00	1.00	1.00	1.00	1.00	1.00	1.00	1.00	1.00
FinalVolume:	80	534	46	98	533	186	123	190	35	50	323	108
Saturation Flow Module:												
Sat/Lane:	1800	1800	1800	1800	1800	1800	1800	1800	1800	1800	1800	1800
Adjustment:	0.90	0.99	0.99	0.90	0.96	0.96	0.90	1.00	0.85	0.90	1.00	0.85
Lanes:	1.00	1.84	0.16	1.00	1.48	0.52	1.00	2.00	1.00	1.00	2.00	1.00
Final Sat.:	1615	3272	285	1615	2565	894	1615	3600	1530	1615	3600	1530
Capacity Analysis Module:												
Vol/Sat:	0.05	0.16	0.16	0.06	0.21	0.21	0.08	0.05	0.02	0.03	0.09	0.07
Crit Moves:		****			****		****				****	
Green/Cycle:	0.27	0.27	0.27	0.27	0.27	0.27	0.11	0.25	0.25	0.11	0.25	0.25
Volume/Cap:	0.18	0.59	0.59	0.22	0.76	0.76	0.69	0.21	0.09	0.28	0.35	0.28
Delay/Veh:	25.4	29.6	29.6	25.7	33.7	33.7	50.3	26.9	26.1	38.1	28.1	27.7
User DelAdj:	1.00	1.00	1.00	1.00	1.00	1.00	1.00	1.00	1.00	1.00	1.00	1.00
AdjDel/Veh:	25.4	29.6	29.6	25.7	33.7	33.7	50.3	26.9	26.1	38.1	28.1	27.7
LOS by Move:	C	C	C	C	C	C	D	C	C	D	C	C
HCM2kAvgQ:	2	8	8	2	11	11	5	2	1	2	4	3

Note: Queue reported is the number of cars per lane.

Traffix 8.0.0715 (c) 2008 Dowling Assoc. Licensed to URBAN CROSSROADS, IRVINE

UNIVERISTY CROSSINGS APARTMENTS TRAFFIC IMPACT ANALYSIS (JN 08139)
Existing Plus Ambient 2014 Conditions
PM PEAK HOUR

Level Of Service Computation Report
2000 HCM Operations Method (Future Volume Alternative)

Intersection #1 California Street / Lugonia Avenue

Cycle (sec): 70 Critical Vol./Cap.(X): 0.400
Loss Time (sec): 6 Average Delay (sec/veh): 24.4
Optimal Cycle: OPTIMIZED Level Of Service: C

Approach:	North Bound			South Bound			East Bound			West Bound		
Movement:	L - T - R			L - T - R			L - T - R			L - T - R		
Control:	Permitted			Permitted			Split Phase			Split Phase		
Rights:	Include			Include			Include			Include		
Min. Green:	10	10	10	28	28	28	30	30	30	10	10	10
Y+R:	4.0	4.0	4.0	4.0	4.0	4.0	4.0	4.0	4.0	4.0	4.0	4.0
Lanes:	1 0	1 0	1	1 0	2 0	1	0 1	0 0	1	0 0	1! 0	0
Volume Module:												
Base Vol:	66	240	124	32	464	7	4	44	166	157	38	30
Growth Adj:	1.04	1.04	1.04	1.04	1.04	1.04	1.04	1.04	1.04	1.04	1.04	1.04
Initial Bse:	69	250	129	33	483	7	4	46	173	163	40	31
Added Vol:	0	0	0	0	0	0	0	0	0	0	0	0
PasserByVol:	0	0	0	0	0	0	0	0	0	0	0	0
Initial Fut:	69	250	129	33	483	7	4	46	173	163	40	31
User Adj:	1.00	1.00	1.00	1.00	1.00	1.00	1.00	1.00	1.00	1.00	1.00	1.00
PHF Adj:	0.87	0.87	0.87	0.87	0.87	0.87	0.87	0.87	0.87	0.87	0.87	0.87
PHF Volume:	79	286	148	38	554	8	5	52	198	187	45	36
Reduct Vol:	0	0	0	0	0	0	0	0	0	0	0	0
Reduced Vol:	79	286	148	38	554	8	5	52	198	187	45	36
PCE Adj:	1.00	1.00	1.00	1.00	1.00	1.00	1.00	1.00	1.00	1.00	1.00	1.00
MLF Adj:	1.00	1.00	1.00	1.00	1.00	1.00	1.00	1.00	1.00	1.00	1.00	1.00
FinalVolume:	79	286	148	38	554	8	5	52	198	187	45	36
Saturation Flow Module:												
Sat/Lane:	1800	1800	1800	1800	1800	1800	1800	1800	1800	1800	1800	1800
Adjustment:	0.25	1.00	0.85	0.31	1.00	0.85	0.94	1.00	0.85	0.90	0.95	0.95
Lanes:	1.00	1.00	1.00	1.00	2.00	1.00	0.09	0.91	1.00	0.71	0.16	0.13
Final Sat.:	457	1800	1530	564	3600	1530	149	1635	1530	1144	277	219
Capacity Analysis Module:												
Vol/Sat:	0.17	0.16	0.10	0.07	0.15	0.01	0.03	0.03	0.13	0.16	0.16	0.16
Crit Moves:	****						****					****
Green/Cycle:	0.26	0.26	0.26	0.26	0.26	0.26	0.41	0.41	0.41	0.25	0.25	0.25
Volume/Cap:	0.65	0.60	0.37	0.26	0.58	0.02	0.08	0.08	0.32	0.65	0.65	0.65
Delay/Veh:	36.5	26.1	22.8	22.5	24.7	20.2	13.6	13.6	15.3	28.6	28.6	28.6
User DelAdj:	1.00	1.00	1.00	1.00	1.00	1.00	1.00	1.00	1.00	1.00	1.00	1.00
AdjDel/Veh:	36.5	26.1	22.8	22.5	24.7	20.2	13.6	13.6	15.3	28.6	28.6	28.6
LOS by Move:	D	C	C	C	C	C	B	B	B	C	C	C
HCM2kAvgQ:	3	7	3	1	6	0	1	1	3	7	7	7

Note: Queue reported is the number of cars per lane.

Traffix 8.0.0715 (c) 2008 Dowling Assoc. Licensed to URBAN CROSSROADS, IRVINE

UNIVERISTY CROSSINGS APARTMENTS TRAFFIC IMPACT ANALYSIS (JN 08139)
Existing Plus Ambient 2014 Conditions
PM PEAK HOUR

Level Of Service Computation Report
2000 HCM 4-Way Stop Method (Future Volume Alternative)

****

Intersection #2 Nevada Street / Lugonia Avenue

****

Cycle (sec):	0	Critical Vol./Cap.(X):	0.706
Loss Time (sec):	0	Average Delay (sec/veh):	17.5
Optimal Cycle:	0	Level Of Service:	C

****

Approach:	North Bound			South Bound			East Bound			West Bound		
Movement:	L -	T -	R	L -	T -	R	L -	T -	R	L -	T -	R
Control:	Stop Sign			Stop Sign			Stop Sign			Stop Sign		
Rights:	Include			Include			Include			Include		
Min. Green:	0	0	0	0	0	0	0	0	0	0	0	0
Lanes:	0 1	0 0	1	0 0	1! 0	0	0 1	0 0	1	0 0	1! 0	0
Volume Module:												
Base Vol:	18	167	167	21	132	5	23	191	47	119	155	9
Growth Adj:	1.04	1.04	1.04	1.04	1.04	1.04	1.04	1.04	1.04	1.04	1.04	1.04
Initial Bse:	19	174	174	22	137	5	24	199	49	124	161	9
Added Vol:	0	0	0	0	0	0	0	0	0	0	0	0
PasserByVol:	0	0	0	0	0	0	0	0	0	0	0	0
Initial Fut:	19	174	174	22	137	5	24	199	49	124	161	9
User Adj:	1.00	1.00	1.00	1.00	1.00	1.00	1.00	1.00	1.00	1.00	1.00	1.00
PHF Adj:	0.85	0.85	0.85	0.85	0.85	0.85	0.85	0.85	0.85	0.85	0.85	0.85
PHF Volume:	22	205	205	26	162	6	28	235	58	146	191	11
Reduct Vol:	0	0	0	0	0	0	0	0	0	0	0	0
Reduced Vol:	22	205	205	26	162	6	28	235	58	146	191	11
PCE Adj:	1.00	1.00	1.00	1.00	1.00	1.00	1.00	1.00	1.00	1.00	1.00	1.00
MLF Adj:	1.00	1.00	1.00	1.00	1.00	1.00	1.00	1.00	1.00	1.00	1.00	1.00
FinalVolume:	22	205	205	26	162	6	28	235	58	146	191	11
Saturation Flow Module:												
Adjustment:	1.00	1.00	1.00	1.00	1.00	1.00	1.00	1.00	1.00	1.00	1.00	1.00
Lanes:	0.10	0.90	1.00	0.13	0.84	0.03	0.11	0.89	1.00	0.42	0.55	0.03
Final Sat.:	47	437	539	59	370	14	52	430	534	207	270	16
Capacity Analysis Module:												
Vol/Sat:	0.47	0.47	0.38	0.44	0.44	0.44	0.55	0.55	0.11	0.71	0.71	0.71
Crit Moves:	****					****		****		****		
Delay/Veh:	15.5	15.5	12.6	15.6	15.6	15.6	17.4	17.4	9.8	24.1	24.1	24.1
Delay Adj:	1.00	1.00	1.00	1.00	1.00	1.00	1.00	1.00	1.00	1.00	1.00	1.00
AdjDel/Veh:	15.5	15.5	12.6	15.6	15.6	15.6	17.4	17.4	9.8	24.1	24.1	24.1
LOS by Move:	C	C	B	C	C	C	C	C	A	C	C	C
ApproachDel:	14.1			15.6			16.0			24.1		
Delay Adj:	1.00			1.00			1.00			1.00		
ApprAdjDel:	14.1			15.6			16.0			24.1		
LOS by Appr:	B			C			C			C		
AllWayAvgQ:	0.8	0.8	0.5	0.6	0.6	0.6	1.0	1.0	0.1	1.9	1.9	1.9

****

Note: Queue reported is the number of cars per lane.

Traffix 8.0.0715 (c) 2008 Dowling Assoc. Licensed to URBAN CROSSROADS, IRVINE

UNIVERISTY CROSSINGS APARTMENTS TRAFFIC IMPACT ANALYSIS (JN 08139)
Existing Plus Ambient 2014 Conditions
PM PEAK HOUR

Level Of Service Computation Report
2000 HCM Operations Method (Future Volume Alternative)

Intersection #5 Alabama Street / Lugonia Avenue

Cycle (sec): 95 Critical Vol./Cap.(X): 0.753
Loss Time (sec): 8 Average Delay (sec/veh): 36.4
Optimal Cycle: OPTIMIZED Level Of Service: D

Approach:	North Bound			South Bound			East Bound			West Bound		
Movement:	L - T - R			L - T - R			L - T - R			L - T - R		
Control:	Protected			Protected			Protected			Protected		
Rights:	Include			Include			Include			Include		
Min. Green:	10	20	20	10	20	20	10	24	24	10	24	24
Y+R:	4.0	4.0	4.0	4.0	4.0	4.0	4.0	4.0	4.0	4.0	4.0	4.0
Lanes:	1 0 2	0	1	1 0 3	0	1	1 0 1	1	0	1 0 2	0	1
Volume Module:												
Base Vol:	116	593	370	134	475	21	130	309	70	342	263	42
Growth Adj:	1.04	1.04	1.04	1.04	1.04	1.04	1.04	1.04	1.04	1.04	1.04	1.04
Initial Bse:	121	617	385	139	494	22	135	321	73	356	274	44
Added Vol:	0	0	0	0	0	0	0	0	0	0	0	0
PasserByVol:	0	0	0	0	0	0	0	0	0	0	0	0
Initial Fut:	121	617	385	139	494	22	135	321	73	356	274	44
User Adj:	1.00	1.00	1.00	1.00	1.00	1.00	1.00	1.00	1.00	1.00	1.00	1.00
PHF Adj:	0.97	0.97	0.97	0.97	0.97	0.97	0.97	0.97	0.97	0.97	0.97	0.97
PHF Volume:	124	634	396	143	508	22	139	330	75	366	281	45
Reduct Vol:	0	0	0	0	0	0	0	0	0	0	0	0
Reduced Vol:	124	634	396	143	508	22	139	330	75	366	281	45
PCE Adj:	1.00	1.00	1.00	1.00	1.00	1.00	1.00	1.00	1.00	1.00	1.00	1.00
MLF Adj:	1.00	1.00	1.00	1.00	1.00	1.00	1.00	1.00	1.00	1.00	1.00	1.00
FinalVolume:	124	634	396	143	508	22	139	330	75	366	281	45
Saturation Flow Module:												
Sat/Lane:	1800	1800	1800	1800	1800	1800	1800	1800	1800	1800	1800	1800
Adjustment:	0.90	1.00	0.85	0.90	1.00	0.85	0.90	0.97	0.97	0.90	1.00	0.85
Lanes:	1.00	2.00	1.00	1.00	3.00	1.00	1.00	1.63	0.37	1.00	2.00	1.00
Final Sat.:	1615	3600	1530	1615	5400	1530	1615	2853	646	1615	3600	1530
Capacity Analysis Module:												
Vol/Sat:	0.08	0.18	0.26	0.09	0.09	0.01	0.09	0.12	0.12	0.23	0.08	0.03
Crit Moves:			****	****				****		****		
Green/Cycle:	0.13	0.30	0.30	0.11	0.27	0.27	0.15	0.25	0.25	0.26	0.36	0.36
Volume/Cap:	0.57	0.59	0.87	0.84	0.35	0.05	0.57	0.46	0.46	0.87	0.22	0.08
Delay/Veh:	42.2	29.4	47.9	71.6	28.2	25.9	40.7	30.4	30.4	51.0	21.0	20.0
User DelAdj:	1.00	1.00	1.00	1.00	1.00	1.00	1.00	1.00	1.00	1.00	1.00	1.00
AdjDel/Veh:	42.2	29.4	47.9	71.6	28.2	25.9	40.7	30.4	30.4	51.0	21.0	20.0
LOS by Move:	D	C	D	E	C	C	D	C	C	D	C	B
HCM2kAvgQ:	4	9	14	7	4	0	5	5	5	14	3	1

Note: Queue reported is the number of cars per lane.

Traffix 8.0.0715 (c) 2008 Dowling Assoc. Licensed to URBAN CROSSROADS, IRVINE

Movement	EBL	EBT	EBR	WBL	WBT	WBR	NBL	NBT	NBR	SBL	SBT	SBR
Lane Configurations												
Volume (vph)	0	0	0	171	328	173	391	1150	0	0	795	319
Ideal Flow (vphpl)	1900	1900	1900	1900	1900	1900	1900	1900	1900	1900	1900	1900
Total Lost time (s)					5.0		4.0	5.0			5.0	
Lane Util. Factor					0.95		1.00	0.95			0.95	
Frpb, ped/bikes					1.00		1.00	1.00			1.00	
Flpb, ped/bikes					1.00		1.00	1.00			1.00	
Frt					0.96		1.00	1.00			0.96	
Flt Protected					0.99		0.95	1.00			1.00	
Satd. Flow (prot)					3411		1805	3610			3455	
Flt Permitted					0.99		0.95	1.00			1.00	
Satd. Flow (perm)					3411		1805	3610			3455	
Peak-hour factor, PHF	0.97	0.97	0.97	0.97	0.97	0.97	0.97	0.97	0.97	0.97	0.97	0.97
Adj. Flow (vph)	0	0	0	176	338	178	403	1186	0	0	820	329
RTOR Reduction (vph)	0	0	0	0	35	0	0	0	0	0	40	0
Lane Group Flow (vph)	0	0	0	0	657	0	403	1186	0	0	1109	0
Confl. Peds. (#/hr)						5						
Heavy Vehicles (%)	0%	0%	0%	0%	0%	0%	0%	0%	0%	0%	0%	0%
Turn Type				Split			Prot					
Protected Phases				4	4		1	6			2	
Permitted Phases												
Actuated Green, G (s)					21.7		25.2	68.3			39.1	
Effective Green, g (s)					21.7		25.2	68.3			39.1	
Actuated g/C Ratio					0.22		0.25	0.68			0.39	
Clearance Time (s)					5.0		4.0	5.0			5.0	
Vehicle Extension (s)					2.0		2.0	2.0			2.0	
Lane Grp Cap (vph)					740		455	2466			1351	
v/s Ratio Prot					c0.19		c0.22	0.33			c0.32	
v/s Ratio Perm												
v/c Ratio					0.89		0.89	0.48			0.82	
Uniform Delay, d1					38.0		36.0	7.5			27.3	
Progression Factor					1.00		0.88	1.92			1.00	
Incremental Delay, d2					12.1		13.3	0.5			5.7	
Delay (s)					50.1		45.0	14.9			33.0	
Level of Service					D		D	B			C	
Approach Delay (s)		0.0			50.1			22.5			33.0	
Approach LOS		A			D			C			C	

Intersection Summary			
HCM Average Control Delay	31.6	HCM Level of Service	C
HCM Volume to Capacity ratio	0.86		
Actuated Cycle Length (s)	100.0	Sum of lost time (s)	14.0
Intersection Capacity Utilization	85.2%	ICU Level of Service	E
Analysis Period (min)	15		
c Critical Lane Group			

Movement	EBL	EBT	EBR	WBL	WBT	WBR	NBL	NBT	NBR	SBL	SBT	SBR
Lane Configurations												
Volume (vph)	478	4	439	0	0	0	0	1062	280	220	749	0
Ideal Flow (vphpl)	1900	1900	1900	1900	1900	1900	1900	1900	1900	1900	1900	1900
Total Lost time (s)		5.0						5.0	5.0	4.0	5.0	
Lane Util. Factor		0.95						0.95	1.00	1.00	0.95	
Frpb, ped/bikes		1.00						1.00	0.98	1.00	1.00	
Flpb, ped/bikes		1.00						1.00	1.00	1.00	1.00	
Frt		0.93						1.00	0.85	1.00	1.00	
Flt Protected		0.97						1.00	1.00	0.95	1.00	
Satd. Flow (prot)		3267						3610	1581	1805	3610	
Flt Permitted		0.97						1.00	1.00	0.95	1.00	
Satd. Flow (perm)		3267						3610	1581	1805	3610	
Peak-hour factor, PHF	0.99	0.99	0.99	0.99	0.99	0.99	0.99	0.99	0.99	0.99	0.99	0.99
Adj. Flow (vph)	483	4	443	0	0	0	0	1073	283	222	757	0
RTOR Reduction (vph)	0	158	0	0	0	0	0	0	156	0	0	0
Lane Group Flow (vph)	0	772	0	0	0	0	0	1073	127	222	757	0
Confl. Peds. (#/hr)									5			
Heavy Vehicles (%)	0%	0%	0%	0%	0%	0%	0%	0%	0%	0%	0%	0%
Turn Type	Split								Perm	Prot		
Protected Phases	8	8						6		5	2	
Permitted Phases									6			
Actuated Green, G (s)		26.4						44.8	44.8	14.8	63.6	
Effective Green, g (s)		26.4						44.8	44.8	14.8	63.6	
Actuated g/C Ratio		0.26						0.45	0.45	0.15	0.64	
Clearance Time (s)		5.0						5.0	5.0	4.0	5.0	
Vehicle Extension (s)		2.0						2.0	2.0	2.0	2.0	
Lane Grp Cap (vph)		862						1617	708	267	2296	
v/s Ratio Prot		c0.24						c0.30		c0.12	0.21	
v/s Ratio Perm									0.08			
v/c Ratio		0.90						0.66	0.18	0.83	0.33	
Uniform Delay, d1		35.5						21.7	16.6	41.4	8.4	
Progression Factor		1.00						1.00	1.00	0.75	0.42	
Incremental Delay, d2		11.5						2.2	0.6	10.7	0.2	
Delay (s)		47.0						23.8	17.1	41.6	3.8	
Level of Service		D						C	B	D	A	
Approach Delay (s)		47.0			0.0			22.4			12.3	
Approach LOS		D			A			C			B	

Intersection Summary			
HCM Average Control Delay	26.4	HCM Level of Service	C
HCM Volume to Capacity ratio	0.76		
Actuated Cycle Length (s)	100.0	Sum of lost time (s)	14.0
Intersection Capacity Utilization	85.2%	ICU Level of Service	E
Analysis Period (min)	15		
c Critical Lane Group			

UNIVERISTY CROSSINGS APARTMENTS TRAFFIC IMPACT ANALYSIS (JN 08139)
Existing Plus Ambient 2014 Conditions
PM PEAK HOUR

Level Of Service Computation Report
2000 HCM Operations Method (Future Volume Alternative)

Intersection #8 Alabama Street / Redlands Boulevard

Cycle (sec): 105 Critical Vol./Cap.(X): 0.758
Loss Time (sec): 8 Average Delay (sec/veh): 40.7
Optimal Cycle: OPTIMIZED Level Of Service: D

Approach:	North Bound			South Bound			East Bound			West Bound		
Movement:	L - T - R			L - T - R			L - T - R			L - T - R		
Control:	Split Phase			Split Phase			Protected			Protected		
Rights:	Include			Include			Include			Include		
Min. Green:	25	25	25	25	25	25	10	23	23	10	23	23
Y+R:	4.0	4.0	4.0	4.0	4.0	4.0	4.0	4.0	4.0	4.0	4.0	4.0
Lanes:	1 0	1	1 0	1 0	1	1 0	1 0	2	0 1	1 0	2	0 1
Volume Module:												
Base Vol:	67	525	77	127	537	104	273	530	78	86	347	153
Growth Adj:	1.04	1.04	1.04	1.04	1.04	1.04	1.04	1.04	1.04	1.04	1.04	1.04
Initial Bse:	70	546	80	132	559	108	284	551	81	89	361	159
Added Vol:	0	0	0	0	0	0	0	0	0	0	0	0
PasserByVol:	0	0	0	0	0	0	0	0	0	0	0	0
Initial Fut:	70	546	80	132	559	108	284	551	81	89	361	159
User Adj:	1.00	1.00	1.00	1.00	1.00	1.00	1.00	1.00	1.00	1.00	1.00	1.00
PHF Adj:	0.92	0.92	0.92	0.92	0.92	0.92	0.92	0.92	0.92	0.92	0.92	0.92
PHF Volume:	76	594	87	144	608	118	309	600	88	97	393	173
Reduct Vol:	0	0	0	0	0	0	0	0	0	0	0	0
Reduced Vol:	76	594	87	144	608	118	309	600	88	97	393	173
PCE Adj:	1.00	1.00	1.00	1.00	1.00	1.00	1.00	1.00	1.00	1.00	1.00	1.00
MLF Adj:	1.00	1.00	1.00	1.00	1.00	1.00	1.00	1.00	1.00	1.00	1.00	1.00
FinalVolume:	76	594	87	144	608	118	309	600	88	97	393	173
Saturation Flow Module:												
Sat/Lane:	1800	1800	1800	1800	1800	1800	1800	1800	1800	1800	1800	1800
Adjustment:	0.90	0.98	0.98	0.90	0.98	0.98	0.90	1.00	0.85	0.90	1.00	0.85
Lanes:	1.00	1.74	0.26	1.00	1.68	0.32	1.00	2.00	1.00	1.00	2.00	1.00
Final Sat.:	1615	3080	452	1615	2944	570	1615	3600	1530	1615	3600	1530
Capacity Analysis Module:												
Vol/Sat:	0.05	0.19	0.19	0.09	0.21	0.21	0.19	0.17	0.06	0.06	0.11	0.11
Crit Moves:		****			****		****				****	
Green/Cycle:	0.24	0.24	0.24	0.24	0.24	0.24	0.22	0.31	0.31	0.13	0.22	0.22
Volume/Cap:	0.20	0.81	0.81	0.37	0.85	0.85	0.85	0.54	0.19	0.45	0.50	0.52
Delay/Veh:	32.2	43.7	43.7	33.7	46.3	46.3	56.4	30.6	26.8	43.3	36.4	37.5
User DelAdj:	1.00	1.00	1.00	1.00	1.00	1.00	1.00	1.00	1.00	1.00	1.00	1.00
AdjDel/Veh:	32.2	43.7	43.7	33.7	46.3	46.3	56.4	30.6	26.8	43.3	36.4	37.5
LOS by Move:	C	D	D	C	D	D	E	C	C	D	D	D
HCM2kAvgQ:	2	13	13	4	14	14	13	8	2	4	6	5

Note: Queue reported is the number of cars per lane.

Traffix 8.0.0715 (c) 2008 Dowling Assoc. Licensed to URBAN CROSSROADS, IRVINE

APPENDIX 5.2

Existing Plus Ambient Growth Plus Project (2014) Conditions
Intersection Operations Analysis Worksheets

UNIVERISTY CROSSINGS APARTMENTS TRAFFIC IMPACT ANALYSIS (JN 08139)
Existing Plus Ambient Plus Project 2014 Conditions
AM PEAK HOUR

Level Of Service Computation Report
2000 HCM Operations Method (Future Volume Alternative)

Intersection #1 California Street / Lugonia Avenue

Cycle (sec): 85 Critical Vol./Cap.(X): 0.375
Loss Time (sec): 6 Average Delay (sec/veh): 22.5
Optimal Cycle: OPTIMIZED Level Of Service: C

Approach:	North Bound			South Bound			East Bound			West Bound		
Movement:	L -	T -	R	L -	T -	R	L -	T -	R	L -	T -	R
Control:	Permitted			Permitted			Split Phase			Split Phase		
Rights:	Include			Include			Include			Include		
Min. Green:	10	10	10	28	28	28	30	30	30	10	10	10
Y+R:	4.0	4.0	4.0	4.0	4.0	4.0	4.0	4.0	4.0	4.0	4.0	4.0
Lanes:	1 0	1 0	1	1 0	2 0	1	0 1	0 0	1	0 0	1! 0	0
Volume Module:												
Base Vol:	190	357	123	13	201	9	2	10	38	37	68	27
Growth Adj:	1.04	1.04	1.04	1.04	1.04	1.04	1.04	1.04	1.04	1.04	1.04	1.04
Initial Bse:	198	371	128	14	209	9	2	10	40	38	71	28
Added Vol:	0	0	5	2	0	0	0	3	0	20	13	7
PasserByVol:	0	0	0	0	0	0	0	0	0	0	0	0
Initial Fut:	198	371	133	16	209	9	2	13	40	58	84	35
User Adj:	1.00	1.00	1.00	1.00	1.00	1.00	1.00	1.00	1.00	1.00	1.00	1.00
PHF Adj:	0.92	0.92	0.92	0.92	0.92	0.92	0.92	0.92	0.92	0.92	0.92	0.92
PHF Volume:	215	404	145	17	228	10	2	15	43	64	91	38
Reduct Vol:	0	0	0	0	0	0	0	0	0	0	0	0
Reduced Vol:	215	404	145	17	228	10	2	15	43	64	91	38
PCE Adj:	1.00	1.00	1.00	1.00	1.00	1.00	1.00	1.00	1.00	1.00	1.00	1.00
MLF Adj:	1.00	1.00	1.00	1.00	1.00	1.00	1.00	1.00	1.00	1.00	1.00	1.00
FinalVolume:	215	404	145	17	228	10	2	15	43	64	91	38
Saturation Flow Module:												
Sat/Lane:	1800	1800	1800	1800	1800	1800	1800	1800	1800	1800	1800	1800
Adjustment:	0.55	1.00	0.85	0.29	1.00	0.85	0.94	0.99	0.85	0.90	0.96	0.96
Lanes:	1.00	1.00	1.00	1.00	2.00	1.00	0.14	0.86	1.00	0.34	0.47	0.19
Final Sat.:	986	1800	1530	529	3600	1530	238	1535	1530	558	798	335
Capacity Analysis Module:												
Vol/Sat:	0.22	0.22	0.09	0.03	0.06	0.01	0.01	0.01	0.03	0.11	0.11	0.11
Crit Moves:		****						****			****	
Green/Cycle:	0.38	0.38	0.38	0.38	0.38	0.38	0.35	0.35	0.35	0.19	0.19	0.19
Volume/Cap:	0.57	0.59	0.25	0.08	0.17	0.02	0.03	0.03	0.08	0.59	0.59	0.59
Delay/Veh:	22.8	22.3	18.1	16.9	17.4	16.3	18.0	18.0	18.4	33.9	33.9	33.9
User DelAdj:	1.00	1.00	1.00	1.00	1.00	1.00	1.00	1.00	1.00	1.00	1.00	1.00
AdjDel/Veh:	22.8	22.3	18.1	16.9	17.4	16.3	18.0	18.0	18.4	33.9	33.9	33.9
LOS by Move:	C	C	B	B	B	B	B	B	B	C	C	C
HCM2kAvgQ:	6	9	3	0	2	0	0	0	1	6	6	6

Note: Queue reported is the number of cars per lane.

Traffix 8.0.0715 (c) 2008 Dowling Assoc. Licensed to URBAN CROSSROADS, IRVINE

UNIVERISTY CROSSINGS APARTMENTS TRAFFIC IMPACT ANALYSIS (JN 08139)
Existing Plus Ambient Plus Project 2014 Conditions
AM PEAK HOUR

Level Of Service Computation Report
2000 HCM 4-Way Stop Method (Future Volume Alternative)

Intersection #2 Nevada Street / Lugonia Avenue

Cycle (sec):	0	Critical Vol./Cap.(X):	0.610
Loss Time (sec):	0	Average Delay (sec/veh):	13.5
Optimal Cycle:	0	Level Of Service:	B

Approach:	North Bound				South Bound				East Bound				West Bound			
Movement:	L	- T	- R		L	- T	- R		L	- T	- R		L	- T	- R	
Control:	Stop Sign				Stop Sign				Stop Sign				Stop Sign			
Rights:	Include				Include				Include				Include			
Min. Green:	0	0	0		0	0	0		0	0	0		0	0	0	
Lanes:	0 1	0 0	1		0 0	1! 0	0		0 1	0 0	1		0 0	1! 0	0	
Volume Module:																
Base Vol:	34	82	26		8	122	13		12	50	30		89	120	11	
Growth Adj:	1.04	1.04	1.04		1.04	1.04	1.04		1.04	1.04	1.04		1.04	1.04	1.04	
Initial Bse:	35	85	27		8	127	14		12	52	31		93	125	11	
Added Vol:	0	0	5		2	0	0		0	10	0		20	40	7	
PasserByVol:	0	0	0		0	0	0		0	0	0		0	0	0	
Initial Fut:	35	85	32		10	127	14		12	62	31		113	165	18	
User Adj:	1.00	1.00	1.00		1.00	1.00	1.00		1.00	1.00	1.00		1.00	1.00	1.00	
PHF Adj:	0.81	0.81	0.81		0.81	0.81	0.81		0.81	0.81	0.81		0.81	0.81	0.81	
PHF Volume:	44	105	40		13	157	17		15	77	39		139	204	23	
Reduct Vol:	0	0	0		0	0	0		0	0	0		0	0	0	
Reduced Vol:	44	105	40		13	157	17		15	77	39		139	204	23	
PCE Adj:	1.00	1.00	1.00		1.00	1.00	1.00		1.00	1.00	1.00		1.00	1.00	1.00	
MLF Adj:	1.00	1.00	1.00		1.00	1.00	1.00		1.00	1.00	1.00		1.00	1.00	1.00	
FinalVolume:	44	105	40		13	157	17		15	77	39		139	204	23	
Saturation Flow Module:																
Adjustment:	1.00	1.00	1.00		1.00	1.00	1.00		1.00	1.00	1.00		1.00	1.00	1.00	
Lanes:	0.29	0.71	1.00		0.07	0.84	0.09		0.17	0.83	1.00		0.38	0.56	0.06	
Final Sat.:	156	376	608		37	460	49		91	452	616		228	334	37	
Capacity Analysis Module:																
Vol/Sat:	0.28	0.28	0.07		0.34	0.34	0.34		0.17	0.17	0.06		0.61	0.61	0.61	
Crit Moves:	****				****				****				****			
Delay/Veh:	11.3	11.3	8.6		12.1	12.1	12.1		10.1	10.1	8.4		17.0	17.0	17.0	
Delay Adj:	1.00	1.00	1.00		1.00	1.00	1.00		1.00	1.00	1.00		1.00	1.00	1.00	
AdjDel/Veh:	11.3	11.3	8.6		12.1	12.1	12.1		10.1	10.1	8.4		17.0	17.0	17.0	
LOS by Move:	B	B	A		B	B	B		B	B	A		C	C	C	
ApproachDel:	10.7				12.1				9.6				17.0			
Delay Adj:	1.00				1.00				1.00				1.00			
ApprAdjDel:	10.7				12.1				9.6				17.0			
LOS by Appr:	B				B				A				C			
AllWayAvgQ:	0.3	0.3	0.1		0.4	0.4	0.4		0.2	0.2	0.1		1.4	1.4	1.4	

Note: Queue reported is the number of cars per lane.

Traffix 8.0.0715 (c) 2008 Dowling Assoc. Licensed to URBAN CROSSROADS, IRVINE

UNIVERISTY CROSSINGS APARTMENTS TRAFFIC IMPACT ANALYSIS (JN 08139)
Existing Plus Ambient Plus Project 2014 Conditions
AM PEAK HOUR

Level Of Service Computation Report
2000 HCM Unsignalized Method (Future Volume Alternative)

Intersection #3 Driveway 1 / Lugonia Avenue

Average Delay (sec/veh): 0.3 Worst Case Level Of Service: A[9.1]

Approach:	North Bound			South Bound			East Bound			West Bound		
Movement:	L - T	- R		L - T	- R		L - T	- R		L - T	- R	
Control:	Stop Sign			Stop Sign			Uncontrolled			Uncontrolled		
Rights:	Include			Include			Include			Include		
Lanes:	0 0 0	0 0		0 0 0	0 1		0 0 1	0 0		0 0 1	1 0	
Volume Module:												
Base Vol:	0	0	0	0	0	0	0	84	0	0	220	0
Growth Adj:	1.04	1.04	1.04	1.04	1.04	1.04	1.04	1.04	1.04	1.04	1.04	1.04
Initial Bse:	0	0	0	0	0	0	0	87	0	0	229	0
Added Vol:	0	0	0	0	0	13	0	16	0	0	53	3
PasserByVol:	0	0	0	0	0	0	0	0	0	0	0	0
Initial Fut:	0	0	0	0	0	13	0	103	0	0	282	3
User Adj:	1.00	1.00	1.00	1.00	1.00	1.00	1.00	1.00	1.00	1.00	1.00	1.00
PHF Adj:	0.95	0.95	0.95	0.95	0.95	0.95	0.95	0.95	0.95	0.95	0.95	0.95
PHF Volume:	0	0	0	0	0	14	0	109	0	0	297	3
Reduct Vol:	0	0	0	0	0	0	0	0	0	0	0	0
FinalVolume:	0	0	0	0	0	14	0	109	0	0	297	3
Critical Gap Module:												
Critical Gp:	xxxxx	xxxx	xxxxx	xxxxx	xxxx	6.2	xxxxx	xxxx	xxxxx	xxxxx	xxxx	xxxxx
FollowUpTim:	xxxxx	xxxx	xxxxx	xxxxx	xxxx	3.3	xxxxx	xxxx	xxxxx	xxxxx	xxxx	xxxxx
Capacity Module:												
Cnflict Vol:	xxxx	xxxx	xxxxx	xxxx	xxxx	150	xxxx	xxxx	xxxxx	xxxx	xxxx	xxxxx
Potent Cap.:	xxxx	xxxx	xxxxx	xxxx	xxxx	902	xxxx	xxxx	xxxxx	xxxx	xxxx	xxxxx
Move Cap.:	xxxx	xxxx	xxxxx	xxxx	xxxx	902	xxxx	xxxx	xxxxx	xxxx	xxxx	xxxxx
Volume/Cap:	xxxx	xxxx	xxxx	xxxx	xxxx	0.02	xxxx	xxxx	xxxx	xxxx	xxxx	xxxx
Level Of Service Module:												
2Way95thQ:	xxxx	xxxx	xxxxx	xxxx	xxxx	0.0	xxxx	xxxx	xxxxx	xxxx	xxxx	xxxxx
Control Del:	xxxxx	xxxx	xxxxx	xxxxx	xxxx	9.1	xxxxx	xxxx	xxxxx	xxxxx	xxxx	xxxxx
LOS by Move:	*	*	*	*	*	A	*	*	*	*	*	*
Movement:	LT - LTR - RT			LT - LTR - RT			LT - LTR - RT			LT - LTR - RT		
Shared Cap.:	xxxx	xxxx	xxxxx	xxxx	xxxx	xxxxx	xxxx	xxxx	xxxxx	xxxx	xxxx	xxxxx
SharedQueue:	xxxxx	xxxx	xxxxx	xxxxx	xxxx	xxxxx	xxxxx	xxxx	xxxxx	xxxxx	xxxx	xxxxx
Shrd ConDel:	xxxxx	xxxx	xxxxx	xxxxx	xxxx	xxxxx	xxxxx	xxxx	xxxxx	xxxxx	xxxx	xxxxx
Shared LOS:	*	*	*	*	*	*	*	*	*	*	*	*
ApproachDel:	xxxxxx			9.1			xxxxxx			xxxxxx		
ApproachLOS:	*			A			*			*		

Note: Queue reported is the number of cars per lane.

Traffix 8.0.0715 (c) 2008 Dowling Assoc. Licensed to URBAN CROSSROADS, IRVINE

UNIVERISTY CROSSINGS APARTMENTS TRAFFIC IMPACT ANALYSIS (JN 08139)
Existing Plus Ambient Plus Project 2014 Conditions
AM PEAK HOUR

Level Of Service Computation Report
2000 HCM Unsignalized Method (Future Volume Alternative)

Intersection #4 Driveway 2 / Lugonia Avenue

Average Delay (sec/veh): 3.1 Worst Case Level Of Service: B[11.0]

Approach:	North Bound					South Bound					East Bound					West Bound				
Movement:	L	-	T	-	R	L	-	T	-	R	L	-	T	-	R	L	-	T	-	R
Control:	Stop Sign					Stop Sign					Uncontrolled					Uncontrolled				
Rights:	Include					Include					Include					Include				
Lanes:	0	0	0	0	0	0	0	1!	0	0	1	0	1	0	0	0	0	1	1	0
Volume Module:																				
Base Vol:	0	0	0	0	0	0	0	0	0	0	0	84	0	0	0	0	220	0		
Growth Adj:	1.04	1.04	1.04	1.04	1.04	1.04	1.04	1.04	1.04	1.04	1.04	1.04	1.04	1.04	1.04	1.04	1.04	1.04		
Initial Bse:	0	0	0	0	0	0	0	0	0	0	0	87	0	0	0	0	229	0		
Added Vol:	0	0	0	66	0	53	16	0	0	0	0	3	13							
PasserByVol:	0	0	0	0	0	0	0	0	0	0	0	0	0							
Initial Fut:	0	0	0	66	0	53	16	87	0	0	232	13								
User Adj:	1.00	1.00	1.00	1.00	1.00	1.00	1.00	1.00	1.00	1.00	1.00	1.00								
PHF Adj:	0.95	0.95	0.95	0.95	0.95	0.95	0.95	0.95	0.95	0.95	0.95	0.95								
PHF Volume:	0	0	0	69	0	56	17	92	0	0	244	14								
Reduct Vol:	0	0	0	0	0	0	0	0	0	0	0	0								
FinalVolume:	0	0	0	69	0	56	17	92	0	0	244	14								
Critical Gap Module:																				
Critical Gp:	xxxxx	xxxx	xxxxx	6.4	6.5	6.2	4.1	xxxx	xxxxx	xxxxx	xxxx	xxxxx								
FollowUpTim:	xxxxx	xxxx	xxxxx	3.5	4.0	3.3	2.2	xxxx	xxxxx	xxxxx	xxxx	xxxxx								
Capacity Module:																				
Cnflict Vol:	xxxx	xxxx	xxxxx	377	377	129	258	xxxx	xxxxx	xxxx	xxxx	xxxxx								
Potent Cap.:	xxxx	xxxx	xxxxx	629	558	926	1319	xxxx	xxxxx	xxxx	xxxx	xxxxx								
Move Cap.:	xxxx	xxxx	xxxxx	623	551	926	1319	xxxx	xxxxx	xxxx	xxxx	xxxxx								
Volume/Cap:	xxxx	xxxx	xxxx	0.11	0.00	0.06	0.01	xxxx	xxxx	xxxx	xxxx	xxxx								
Level Of Service Module:																				
2Way95thQ:	xxxx	xxxx	xxxxx	xxxx	xxxx	xxxxx	0.0	xxxx	xxxxx	xxxx	xxxx	xxxxx								
Control Del:	xxxxx	xxxx	xxxxx	xxxxx	xxxx	xxxxx	7.8	xxxx	xxxxx	xxxxx	xxxx	xxxxx								
LOS by Move:	*	*	*	*	*	*	A	*	*	*	*	*								
Movement:	LT	-	LTR	-	RT	LT	-	LTR	-	RT	LT	-	LTR	-	RT	LT	-	LTR	-	RT
Shared Cap.:	xxxx	xxxx	xxxxx	xxxx	729	xxxxx	xxxx	xxxx	xxxxx	xxxx	xxxx	xxxxx								
SharedQueue:	xxxxx	xxxx	xxxxx	xxxxx	0.6	xxxxx	xxxxx	xxxx	xxxxx	xxxxx	xxxx	xxxxx								
Shrd ConDel:	xxxxx	xxxx	xxxxx	xxxxx	11.0	xxxxx	xxxxx	xxxx	xxxxx	xxxxx	xxxx	xxxxx								
Shared LOS:	*	*	*	*	B	*	*	*	*	*	*	*								
ApproachDel:	xxxxxx				11.0		xxxxxx				xxxxxx									
ApproachLOS:	*				B		*				*									

Note: Queue reported is the number of cars per lane.

Traffix 8.0.0715 (c) 2008 Dowling Assoc. Licensed to URBAN CROSSROADS, IRVINE

UNIVERISTY CROSSINGS APARTMENTS TRAFFIC IMPACT ANALYSIS (JN 08139)
Existing Plus Ambient Plus Project 2014 Conditions
AM PEAK HOUR

Level Of Service Computation Report
2000 HCM Operations Method (Future Volume Alternative)

Intersection #5 Alabama Street / Lugonia Avenue

Cycle (sec): 75 Critical Vol./Cap.(X): 0.344
Loss Time (sec): 8 Average Delay (sec/veh): 23.4
Optimal Cycle: OPTIMIZED Level Of Service: C

Approach:	North Bound			South Bound			East Bound			West Bound		
Movement:	L - T - R			L - T - R			L - T - R			L - T - R		
Control:	Protected			Protected			Protected			Protected		
Rights:	Include			Include			Include			Include		
Min. Green:	10	20	20	10	20	20	10	24	24	10	24	24
Y+R:	4.0	4.0	4.0	4.0	4.0	4.0	4.0	4.0	4.0	4.0	4.0	4.0
Lanes:	1 0	2 0	1	1 0	3 0	1	1 0	1 1	0	1 0	2 0	1
Volume Module:												
Base Vol:	87	284	141	43	335	57	42	80	35	159	203	30
Growth Adj:	1.04	1.04	1.04	1.04	1.04	1.04	1.04	1.04	1.04	1.04	1.04	1.04
Initial Bse:	91	295	147	45	349	59	44	83	36	165	211	31
Added Vol:	6	0	0	0	0	5	20	20	26	0	5	0
PasserByVol:	0	0	0	0	0	0	0	0	0	0	0	0
Initial Fut:	97	295	147	45	349	64	64	103	62	165	216	31
User Adj:	1.00	1.00	1.00	1.00	1.00	1.00	1.00	1.00	1.00	1.00	1.00	1.00
PHF Adj:	0.90	0.90	0.90	0.90	0.90	0.90	0.90	0.90	0.90	0.90	0.90	0.90
PHF Volume:	108	329	164	50	389	72	71	115	70	184	241	35
Reduct Vol:	0	0	0	0	0	0	0	0	0	0	0	0
Reduced Vol:	108	329	164	50	389	72	71	115	70	184	241	35
PCE Adj:	1.00	1.00	1.00	1.00	1.00	1.00	1.00	1.00	1.00	1.00	1.00	1.00
MLF Adj:	1.00	1.00	1.00	1.00	1.00	1.00	1.00	1.00	1.00	1.00	1.00	1.00
FinalVolume:	108	329	164	50	389	72	71	115	70	184	241	35
Saturation Flow Module:												
Sat/Lane:	1800	1800	1800	1800	1800	1800	1800	1800	1800	1800	1800	1800
Adjustment:	0.90	1.00	0.85	0.90	1.00	0.85	0.90	0.94	0.94	0.90	1.00	0.85
Lanes:	1.00	2.00	1.00	1.00	3.00	1.00	1.00	1.25	0.75	1.00	2.00	1.00
Final Sat.:	1615	3600	1530	1615	5400	1530	1615	2116	1279	1615	3600	1530
Capacity Analysis Module:												
Vol/Sat:	0.07	0.09	0.11	0.03	0.07	0.05	0.04	0.05	0.05	0.11	0.07	0.02
Crit Moves:	****				****			****		****		
Green/Cycle:	0.13	0.27	0.27	0.13	0.27	0.27	0.15	0.32	0.32	0.17	0.35	0.35
Volume/Cap:	0.50	0.34	0.40	0.23	0.27	0.18	0.30	0.17	0.17	0.66	0.19	0.07
Delay/Veh:	32.0	22.4	23.2	29.6	21.8	21.4	29.4	18.4	18.4	34.6	17.1	16.4
User DelAdj:	1.00	1.00	1.00	1.00	1.00	1.00	1.00	1.00	1.00	1.00	1.00	1.00
AdjDel/Veh:	32.0	22.4	23.2	29.6	21.8	21.4	29.4	18.4	18.4	34.6	17.1	16.4
LOS by Move:	C	C	C	C	C	C	C	B	B	C	B	B
HCM2kAvgQ:	3	3	3	1	2	1	2	2	2	5	2	1

Note: Queue reported is the number of cars per lane.

Traffix 8.0.0715 (c) 2008 Dowling Assoc. Licensed to URBAN CROSSROADS, IRVINE

Movement	EBL	EBT	EBR	WBL	WBT	WBR	NBL	NBT	NBR	SBL	SBT	SBR
Lane Configurations												
Volume (vph)	0	0	0	254	307	276	361	480	0	0	373	162
Ideal Flow (vphpl)	1900	1900	1900	1900	1900	1900	1900	1900	1900	1900	1900	1900
Total Lost time (s)					5.0		4.0	5.0			5.0	
Lane Util. Factor					0.95		1.00	0.95			0.95	
Frpb, ped/bikes					0.99		1.00	1.00			1.00	
Flpb, ped/bikes					1.00		1.00	1.00			1.00	
Frt					0.95		1.00	1.00			0.95	
Flt Protected					0.99		0.95	1.00			1.00	
Satd. Flow (prot)					3360		1805	3610			3446	
Flt Permitted					0.99		0.95	1.00			1.00	
Satd. Flow (perm)					3360		1805	3610			3446	
Peak-hour factor, PHF	0.92	0.92	0.92	0.92	0.92	0.92	0.92	0.92	0.92	0.92	0.92	0.92
Adj. Flow (vph)	0	0	0	276	334	300	392	522	0	0	405	176
RTOR Reduction (vph)	0	0	0	0	60	0	0	0	0	0	46	0
Lane Group Flow (vph)	0	0	0	0	850	0	392	522	0	0	535	0
Confl. Peds. (#/hr)						5						
Heavy Vehicles (%)	0%	0%	0%	0%	0%	0%	0%	0%	0%	0%	0%	0%
Turn Type				Split			Prot					
Protected Phases				4	4		1	6			2	
Permitted Phases												
Actuated Green, G (s)					23.0		24.8	67.0			38.2	
Effective Green, g (s)					23.0		24.8	67.0			38.2	
Actuated g/C Ratio					0.23		0.25	0.67			0.38	
Clearance Time (s)					5.0		4.0	5.0			5.0	
Vehicle Extension (s)					2.0		2.0	2.0			2.0	
Lane Grp Cap (vph)					773		448	2419			1316	
v/s Ratio Prot					c0.25		c0.22	0.14			c0.16	
v/s Ratio Perm												
v/c Ratio					1.10		0.88	0.22			0.41	
Uniform Delay, d1					38.5		36.1	6.4			22.6	
Progression Factor					1.00		1.03	1.42			1.00	
Incremental Delay, d2					63.1		16.0	0.2			0.9	
Delay (s)					101.6		53.2	9.2			23.5	
Level of Service					F		D	A			C	
Approach Delay (s)		0.0			101.6			28.1			23.5	
Approach LOS		A			F			C			C	

Intersection Summary			
HCM Average Control Delay	54.8	HCM Level of Service	D
HCM Volume to Capacity ratio	0.73		
Actuated Cycle Length (s)	100.0	Sum of lost time (s)	14.0
Intersection Capacity Utilization	72.1%	ICU Level of Service	C
Analysis Period (min)	15		
c Critical Lane Group			

Movement	EBL	EBT	EBR	WBL	WBT	WBR	NBL	NBT	NBR	SBL	SBT	SBR
Lane Configurations												
Volume (vph)	221	1	388	0	0	0	0	620	128	64	582	0
Ideal Flow (vphpl)	1900	1900	1900	1900	1900	1900	1900	1900	1900	1900	1900	1900
Total Lost time (s)		5.0						5.0	5.0	4.0	5.0	
Lane Util. Factor		0.95						0.95	1.00	1.00	0.95	
Frpb, ped/bikes		1.00						1.00	0.98	1.00	1.00	
Flpb, ped/bikes		1.00						1.00	1.00	1.00	1.00	
Frt		0.90						1.00	0.85	1.00	1.00	
Flt Protected		0.98						1.00	1.00	0.95	1.00	
Satd. Flow (prot)		3207						3610	1581	1805	3610	
Flt Permitted		0.98						1.00	1.00	0.95	1.00	
Satd. Flow (perm)		3207						3610	1581	1805	3610	
Peak-hour factor, PHF	0.94	0.94	0.94	0.94	0.94	0.94	0.94	0.94	0.94	0.94	0.94	0.94
Adj. Flow (vph)	235	1	413	0	0	0	0	660	136	68	619	0
RTOR Reduction (vph)	0	243	0	0	0	0	0	0	52	0	0	0
Lane Group Flow (vph)	0	406	0	0	0	0	0	660	84	68	619	0
Confl. Peds. (#/hr)									5			
Heavy Vehicles (%)	0%	0%	0%	0%	0%	0%	0%	0%	0%	0%	0%	0%
Turn Type	Split								Perm	Prot		
Protected Phases	8	8						6		5	2	
Permitted Phases									6			
Actuated Green, G (s)		16.7						62.1	62.1	7.2	73.3	
Effective Green, g (s)		16.7						62.1	62.1	7.2	73.3	
Actuated g/C Ratio		0.17						0.62	0.62	0.07	0.73	
Clearance Time (s)		5.0						5.0	5.0	4.0	5.0	
Vehicle Extension (s)		2.0						2.0	2.0	2.0	2.0	
Lane Grp Cap (vph)		536						2242	982	130	2646	
v/s Ratio Prot		c0.13						c0.18		c0.04	0.17	
v/s Ratio Perm									0.05			
v/c Ratio		0.76						0.29	0.09	0.52	0.23	
Uniform Delay, d1		39.7						8.8	7.6	44.7	4.3	
Progression Factor		1.00						1.00	1.00	0.93	0.15	
Incremental Delay, d2		5.4						0.3	0.2	1.2	0.1	
Delay (s)		45.1						9.1	7.8	42.9	0.8	
Level of Service		D						A	A	D	A	
Approach Delay (s)		45.1			0.0			8.9			5.0	
Approach LOS		D			A			A			A	

Intersection Summary			
HCM Average Control Delay	18.6	HCM Level of Service	B
HCM Volume to Capacity ratio	0.40		
Actuated Cycle Length (s)	100.0	Sum of lost time (s)	14.0
Intersection Capacity Utilization	72.1%	ICU Level of Service	C
Analysis Period (min)	15		
c Critical Lane Group			

UNIVERISTY CROSSINGS APARTMENTS TRAFFIC IMPACT ANALYSIS (JN 08139)
Existing Plus Ambient Plus Project 2014 Conditions
AM PEAK HOUR

Level Of Service Computation Report
2000 HCM Operations Method (Future Volume Alternative)

Intersection #8 Alabama Street / Redlands Boulevard

Cycle (sec): 90 Critical Vol./Cap.(X): 0.592
Loss Time (sec): 8 Average Delay (sec/veh): 31.4
Optimal Cycle: OPTIMIZED Level Of Service: C

Approach:	North Bound			South Bound			East Bound			West Bound		
Movement:	L - T - R			L - T - R			L - T - R			L - T - R		
Control:	Split Phase			Split Phase			Protected			Protected		
Rights:	Include			Include			Include			Include		
Min. Green:	25	25	25	25	25	25	10	23	23	10	23	23
Y+R:	4.0	4.0	4.0	4.0	4.0	4.0	4.0	4.0	4.0	4.0	4.0	4.0
Lanes:	1 0	1	1 0	1 0	1	1 0	1 0	2	0 1	1 0	2	0 1
Volume Module:												
Base Vol:	69	460	40	84	459	160	106	164	30	43	278	93
Growth Adj:	1.04	1.04	1.04	1.04	1.04	1.04	1.04	1.04	1.04	1.04	1.04	1.04
Initial Bse:	72	479	42	87	478	166	110	171	31	45	289	97
Added Vol:	0	2	0	7	7	0	0	0	0	0	0	2
PasserByVol:	0	0	0	0	0	0	0	0	0	0	0	0
Initial Fut:	72	481	42	94	485	166	110	171	31	45	289	99
User Adj:	1.00	1.00	1.00	1.00	1.00	1.00	1.00	1.00	1.00	1.00	1.00	1.00
PHF Adj:	0.90	0.90	0.90	0.90	0.90	0.90	0.90	0.90	0.90	0.90	0.90	0.90
PHF Volume:	80	536	46	105	541	186	123	190	35	50	323	110
Reduct Vol:	0	0	0	0	0	0	0	0	0	0	0	0
Reduced Vol:	80	536	46	105	541	186	123	190	35	50	323	110
PCE Adj:	1.00	1.00	1.00	1.00	1.00	1.00	1.00	1.00	1.00	1.00	1.00	1.00
MLF Adj:	1.00	1.00	1.00	1.00	1.00	1.00	1.00	1.00	1.00	1.00	1.00	1.00
FinalVolume:	80	536	46	105	541	186	123	190	35	50	323	110
Saturation Flow Module:												
Sat/Lane:	1800	1800	1800	1800	1800	1800	1800	1800	1800	1800	1800	1800
Adjustment:	0.90	0.99	0.99	0.90	0.96	0.96	0.90	1.00	0.85	0.90	1.00	0.85
Lanes:	1.00	1.84	0.16	1.00	1.49	0.51	1.00	2.00	1.00	1.00	2.00	1.00
Final Sat.:	1615	3273	283	1615	2578	886	1615	3600	1530	1615	3600	1530
Capacity Analysis Module:												
Vol/Sat:	0.05	0.16	0.16	0.07	0.21	0.21	0.08	0.05	0.02	0.03	0.09	0.07
Crit Moves:		****			****		****				****	
Green/Cycle:	0.27	0.27	0.27	0.27	0.27	0.27	0.11	0.25	0.25	0.11	0.25	0.25
Volume/Cap:	0.18	0.60	0.60	0.24	0.76	0.76	0.69	0.21	0.09	0.28	0.35	0.29
Delay/Veh:	25.4	29.6	29.6	25.9	34.0	34.0	50.3	26.9	26.1	38.1	28.1	27.8
User DelAdj:	1.00	1.00	1.00	1.00	1.00	1.00	1.00	1.00	1.00	1.00	1.00	1.00
AdjDel/Veh:	25.4	29.6	29.6	25.9	34.0	34.0	50.3	26.9	26.1	38.1	28.1	27.8
LOS by Move:	C	C	C	C	C	C	D	C	C	D	C	C
HCM2kAvgQ:	2	8	8	2	11	11	5	2	1	2	4	3

Note: Queue reported is the number of cars per lane.

Traffix 8.0.0715 (c) 2008 Dowling Assoc. Licensed to URBAN CROSSROADS, IRVINE

UNIVERISTY CROSSINGS APARTMENTS TRAFFIC IMPACT ANALYSIS (JN 08139)
Existing Plus Ambient Plus Project 2014 Conditions
PM PEAK HOUR

Level Of Service Computation Report
2000 HCM Operations Method (Future Volume Alternative)

Intersection #1 California Street / Lugonia Avenue

Cycle (sec): 70 Critical Vol./Cap.(X): 0.432
Loss Time (sec): 6 Average Delay (sec/veh): 25.3
Optimal Cycle: OPTIMIZED Level Of Service: C

Approach:	North Bound			South Bound			East Bound			West Bound		
Movement:	L -	T -	R	L -	T -	R	L -	T -	R	L -	T -	R
Control:	Permitted			Permitted			Split Phase			Split Phase		
Rights:	Include			Include			Include			Include		
Min. Green:	10	10	10	28	28	28	30	30	30	10	10	10
Y+R:	4.0	4.0	4.0	4.0	4.0	4.0	4.0	4.0	4.0	4.0	4.0	4.0
Lanes:	1 0	1 0	1	1 0	2 0	1	0 1	0 0	1	0 0	1! 0	0
Volume Module:												
Base Vol:	66	240	124	32	464	7	4	44	166	157	38	30
Growth Adj:	1.04	1.04	1.04	1.04	1.04	1.04	1.04	1.04	1.04	1.04	1.04	1.04
Initial Bse:	69	250	129	33	483	7	4	46	173	163	40	31
Added Vol:	0	0	19	6	0	0	0	13	0	11	7	4
PasserByVol:	0	0	0	0	0	0	0	0	0	0	0	0
Initial Fut:	69	250	148	39	483	7	4	59	173	174	47	35
User Adj:	1.00	1.00	1.00	1.00	1.00	1.00	1.00	1.00	1.00	1.00	1.00	1.00
PHF Adj:	0.87	0.87	0.87	0.87	0.87	0.87	0.87	0.87	0.87	0.87	0.87	0.87
PHF Volume:	79	286	170	45	554	8	5	67	198	200	53	40
Reduct Vol:	0	0	0	0	0	0	0	0	0	0	0	0
Reduced Vol:	79	286	170	45	554	8	5	67	198	200	53	40
PCE Adj:	1.00	1.00	1.00	1.00	1.00	1.00	1.00	1.00	1.00	1.00	1.00	1.00
MLF Adj:	1.00	1.00	1.00	1.00	1.00	1.00	1.00	1.00	1.00	1.00	1.00	1.00
FinalVolume:	79	286	170	45	554	8	5	67	198	200	53	40
Saturation Flow Module:												
Sat/Lane:	1800	1800	1800	1800	1800	1800	1800	1800	1800	1800	1800	1800
Adjustment:	0.25	1.00	0.85	0.30	1.00	0.85	0.94	1.00	0.85	0.90	0.95	0.95
Lanes:	1.00	1.00	1.00	1.00	2.00	1.00	0.07	0.93	1.00	0.70	0.17	0.13
Final Sat.:	444	1800	1530	547	3600	1530	118	1669	1530	1119	299	226
Capacity Analysis Module:												
Vol/Sat:	0.18	0.16	0.11	0.08	0.15	0.01	0.04	0.04	0.13	0.18	0.18	0.18
Crit Moves:	****							****			****	
Green/Cycle:	0.26	0.26	0.26	0.26	0.26	0.26	0.41	0.41	0.41	0.26	0.26	0.26
Volume/Cap:	0.69	0.62	0.43	0.32	0.60	0.02	0.10	0.10	0.32	0.69	0.69	0.69
Delay/Veh:	41.8	27.0	23.8	23.7	25.3	20.6	13.7	13.7	15.3	29.7	29.7	29.7
User DelAdj:	1.00	1.00	1.00	1.00	1.00	1.00	1.00	1.00	1.00	1.00	1.00	1.00
AdjDel/Veh:	41.8	27.0	23.8	23.7	25.3	20.6	13.7	13.7	15.3	29.7	29.7	29.7
LOS by Move:	D	C	C	C	C	C	B	B	B	C	C	C
HCM2kAvgQ:	3	7	4	1	6	0	1	1	3	8	8	8

Note: Queue reported is the number of cars per lane.

Traffix 8.0.0715 (c) 2008 Dowling Assoc. Licensed to URBAN CROSSROADS, IRVINE

UNIVERISTY CROSSINGS APARTMENTS TRAFFIC IMPACT ANALYSIS (JN 08139)
Existing Plus Ambient Plus Project 2014 Conditions
PM PEAK HOUR

Level Of Service Computation Report
2000 HCM 4-Way Stop Method (Future Volume Alternative)

****

Intersection #2 Nevada Street / Lugonia Avenue

****

Cycle (sec):	0	Critical Vol./Cap.(X):	0.820
Loss Time (sec):	0	Average Delay (sec/veh):	22.4
Optimal Cycle:	0	Level Of Service:	C

****

Approach:	North Bound			South Bound			East Bound			West Bound		
Movement:	L -	T -	R	L -	T -	R	L -	T -	R	L -	T -	R
Control:	Stop Sign			Stop Sign			Stop Sign			Stop Sign		
Rights:	Include			Include			Include			Include		
Min. Green:	0	0	0	0	0	0	0	0	0	0	0	0
Lanes:	0 1	0 0	1	0 0	1! 0	0	0 1	0 0	1	0 0	1! 0	0
Volume Module:												
Base Vol:	18	167	167	21	132	5	23	191	47	119	155	9
Growth Adj:	1.04	1.04	1.04	1.04	1.04	1.04	1.04	1.04	1.04	1.04	1.04	1.04
Initial Bse:	19	174	174	22	137	5	24	199	49	124	161	9
Added Vol:	0	0	19	6	0	0	0	38	0	11	21	4
PasserByVol:	0	0	0	0	0	0	0	0	0	0	0	0
Initial Fut:	19	174	193	28	137	5	24	237	49	135	182	13
User Adj:	1.00	1.00	1.00	1.00	1.00	1.00	1.00	1.00	1.00	1.00	1.00	1.00
PHF Adj:	0.85	0.85	0.85	0.85	0.85	0.85	0.85	0.85	0.85	0.85	0.85	0.85
PHF Volume:	22	205	228	33	162	6	28	280	58	159	215	16
Reduct Vol:	0	0	0	0	0	0	0	0	0	0	0	0
Reduced Vol:	22	205	228	33	162	6	28	280	58	159	215	16
PCE Adj:	1.00	1.00	1.00	1.00	1.00	1.00	1.00	1.00	1.00	1.00	1.00	1.00
MLF Adj:	1.00	1.00	1.00	1.00	1.00	1.00	1.00	1.00	1.00	1.00	1.00	1.00
FinalVolume:	22	205	228	33	162	6	28	280	58	159	215	16
Saturation Flow Module:												
Adjustment:	1.00	1.00	1.00	1.00	1.00	1.00	1.00	1.00	1.00	1.00	1.00	1.00
Lanes:	0.10	0.90	1.00	0.16	0.81	0.03	0.09	0.91	1.00	0.41	0.55	0.04
Final Sat.:	45	413	506	67	332	13	43	423	514	194	263	19
Capacity Analysis Module:												
Vol/Sat:	0.50	0.50	0.45	0.49	0.49	0.49	0.66	0.66	0.11	0.82	0.82	0.82
Crit Moves:		****		****				****			****	
Delay/Veh:	16.9	16.9	14.5	17.5	17.5	17.5	22.4	22.4	10.2	34.3	34.3	34.3
Delay Adj:	1.00	1.00	1.00	1.00	1.00	1.00	1.00	1.00	1.00	1.00	1.00	1.00
AdjDel/Veh:	16.9	16.9	14.5	17.5	17.5	17.5	22.4	22.4	10.2	34.3	34.3	34.3
LOS by Move:	C	C	B	C	C	C	C	C	B	D	D	D
ApproachDel:	15.7			17.5			20.5			34.3		
Delay Adj:	1.00			1.00			1.00			1.00		
ApprAdjDel:	15.7			17.5			20.5			34.3		
LOS by Appr:	C			C			C			D		
AllWayAvgQ:	0.8	0.8	0.7	0.7	0.7	0.7	1.6	1.6	0.1	3.2	3.2	3.2

****

Note: Queue reported is the number of cars per lane.

Traffix 8.0.0715 (c) 2008 Dowling Assoc. Licensed to URBAN CROSSROADS, IRVINE

```
------------------------------------------------------------------------------
      UNIVERISTY CROSSINGS APARTMENTS TRAFFIC IMPACT ANALYSIS (JN 08139)
              Existing Plus Ambient Plus Project 2014 Conditions
                                  PM PEAK HOUR
------------------------------------------------------------------------------
                       Level Of Service Computation Report
           2000 HCM Unsignalized Method (Future Volume Alternative)
******************************************************************************
Intersection #3 Driveway 1 / Lugonia Avenue
******************************************************************************
Average Delay (sec/veh):      0.1       Worst Case Level Of Service: A[  9.2]
******************************************************************************
Approach:      North Bound      South Bound       East Bound       West Bound
Movement:     L  -  T  -  R    L  -  T  -  R    L  -  T  -  R    L  -  T  -  R
------------|---------------||---------------||---------------||---------------|
Control:        Stop Sign        Stop Sign       Uncontrolled     Uncontrolled
Rights:           Include          Include          Include          Include
Lanes:        0  0  0  0  0    0  0  0  0  1    0  0  1  0  0    0  0  1  1  0
------------|---------------||---------------||---------------||---------------|
Volume Module:
Base Vol:       0    0     0     0    0     0     0  379     0     0  283     0
Growth Adj:  1.04 1.04  1.04  1.04 1.04  1.04  1.04 1.04  1.04  1.04 1.04  1.04
Initial Bse:    0    0     0     0    0     0     0  394     0     0  294     0
Added Vol:      0    0     0     0    0     7     0   64     0     0   28    13
PasserByVol:    0    0     0     0    0     0     0    0     0     0    0     0
Initial Fut:    0    0     0     0    0     7     0  458     0     0  322    13
User Adj:    1.00 1.00  1.00  1.00 1.00  1.00  1.00 1.00  1.00  1.00 1.00  1.00
PHF Adj:     0.95 0.95  0.95  0.95 0.95  0.95  0.95 0.95  0.95  0.95 0.95  0.95
PHF Volume:     0    0     0     0    0     7     0  482     0     0  339    14
Reduct Vol:     0    0     0     0    0     0     0    0     0     0    0     0
FinalVolume:    0    0     0     0    0     7     0  482     0     0  339    14
------------|---------------||---------------||---------------||---------------|
Critical Gap Module:
Critical Gp:xxxxx xxxx xxxxx xxxxx xxxx   6.2 xxxxx xxxx xxxxx xxxxx xxxx xxxxx
FollowUpTim:xxxxx xxxx xxxxx xxxxx xxxx   3.3 xxxxx xxxx xxxxx xxxxx xxxx xxxxx
------------|---------------||---------------||---------------||---------------|
Capacity Module:
Cnflict Vol: xxxx xxxx xxxxx  xxxx xxxx   177  xxxx xxxx xxxxx  xxxx xxxx xxxxx
Potent Cap.: xxxx xxxx xxxxx  xxxx xxxx   872  xxxx xxxx xxxxx  xxxx xxxx xxxxx
Move Cap.:   xxxx xxxx xxxxx  xxxx xxxx   872  xxxx xxxx xxxxx  xxxx xxxx xxxxx
Volume/Cap:  xxxx xxxx  xxxx  xxxx xxxx  0.01  xxxx xxxx  xxxx  xxxx xxxx  xxxx
------------|---------------||---------------||---------------||---------------|
Level Of Service Module:
2Way95thQ:   xxxx xxxx xxxxx  xxxx xxxx   0.0  xxxx xxxx xxxxx  xxxx xxxx xxxxx
Control Del:xxxxx xxxx xxxxx xxxxx xxxx   9.2 xxxxx xxxx xxxxx xxxxx xxxx xxxxx
LOS by Move:    *    *     *     *    *     A     *    *     *     *    *     *
Movement:     LT - LTR - RT    LT - LTR - RT    LT - LTR - RT    LT - LTR - RT
Shared Cap.: xxxx xxxx xxxxx  xxxx xxxx xxxxx  xxxx xxxx xxxxx  xxxx xxxx xxxxx
SharedQueue:xxxxx xxxx xxxxx xxxxx xxxx xxxxx xxxxx xxxx xxxxx xxxxx xxxx xxxxx
Shrd ConDel:xxxxx xxxx xxxxx xxxxx xxxx xxxxx xxxxx xxxx xxxxx xxxxx xxxx xxxxx
Shared LOS:     *    *     *     *    *     *     *    *     *     *    *     *
ApproachDel:    xxxxxx              9.2           xxxxxx           xxxxxx
ApproachLOS:         *                A                *                *
******************************************************************************
Note: Queue reported is the number of cars per lane.
******************************************************************************


  Traffix 8.0.0715 (c) 2008 Dowling Assoc. Licensed to URBAN CROSSROADS, IRVINE
```

UNIVERISTY CROSSINGS APARTMENTS TRAFFIC IMPACT ANALYSIS (JN 08139)
Existing Plus Ambient Plus Project 2014 Conditions
PM PEAK HOUR

Level Of Service Computation Report
2000 HCM Unsignalized Method (Future Volume Alternative)

Intersection #4 Driveway 2 / Lugonia Avenue

Average Delay (sec/veh): 1.7 Worst Case Level Of Service: C[15.3]

Approach:	North Bound					South Bound					East Bound					West Bound				
Movement:	L	-	T	-	R	L	-	T	-	R	L	-	T	-	R	L	-	T	-	R
Control:	Stop Sign					Stop Sign					Uncontrolled					Uncontrolled				
Rights:	Include					Include					Include					Include				
Lanes:	0	0	0	0	0	0	0	1!	0	0	1	0	1	0	0	0	0	1	1	0
Volume Module:																				
Base Vol:	0	0	0	0	0	0	0				0	379		0		0	283		0	
Growth Adj:	1.04	1.04	1.04	1.04	1.04	1.04	1.04				1.04	1.04		1.04		1.04	1.04		1.04	
Initial Bse:	0	0	0	0	0	0	0				0	394		0		0	294		0	
Added Vol:	0	0	0	36	0	28	64				0	0		0		0	13		51	
PasserByVol:	0	0	0	0	0	0	0				0	0		0		0	0		0	
Initial Fut:	0	0	0	36	0	28	64				0	394		0		0	307		51	
User Adj:	1.00	1.00	1.00	1.00	1.00	1.00	1.00				1.00	1.00		1.00		1.00	1.00		1.00	
PHF Adj:	0.95	0.95	0.95	0.95	0.95	0.95	0.95				0.95	0.95		0.95		0.95	0.95		0.95	
PHF Volume:	0	0	0	38	0	29	67				0	415		0		0	324		54	
Reduct Vol:	0	0	0	0	0	0	0				0	0		0		0	0		0	
FinalVolume:	0	0	0	38	0	29	67				0	415		0		0	324		54	
Critical Gap Module:																				
Critical Gp:	xxxxx	xxxx	xxxxx	6.4	6.5	6.2	4.1				xxxx	xxxxx		xxxxx		xxxx	xxxxx			
FollowUpTim:	xxxxx	xxxx	xxxxx	3.5	4.0	3.3	2.2				xxxx	xxxxx		xxxxx		xxxx	xxxxx			
Capacity Module:																				
Cnflict Vol:	xxxx	xxxx	xxxxx	900	900	189	377				xxxx	xxxxx		xxxx		xxxx	xxxxx			
Potent Cap.:	xxxx	xxxx	xxxxx	311	280	858	1192				xxxx	xxxxx		xxxx		xxxx	xxxxx			
Move Cap.:	xxxx	xxxx	xxxxx	298	264	858	1192				xxxx	xxxxx		xxxx		xxxx	xxxxx			
Volume/Cap:	xxxx	xxxx	xxxx	0.13	0.00	0.03	0.06				xxxx	xxxx		xxxx		xxxx	xxxx			
Level Of Service Module:																				
2Way95thQ:	xxxx	xxxx	xxxxx	xxxx	xxxx	xxxxx	0.2				xxxx	xxxxx		xxxx		xxxx	xxxxx			
Control Del:	xxxxx	xxxx	xxxxx	xxxxx	xxxx	xxxxx	8.2				xxxx	xxxxx		xxxxx		xxxx	xxxxx			
LOS by Move:	*	*	*	*	*	*	A				*	*		*		*	*			
Movement:	LT	-	LTR	-	RT	LT	-	LTR	-	RT	LT	-	LTR	-	RT	LT	-	LTR	-	RT
Shared Cap.:	xxxx	xxxx	xxxxx	xxxx	417	xxxxx	xxxx	xxxx	xxxxx		xxxx	xxxxx		xxxx		xxxx	xxxxx			
SharedQueue:	xxxxx	xxxx	xxxxx	xxxxx	0.6	xxxxx	xxxxx	xxxx	xxxxx		xxxxx	xxxxx		xxxx		xxxx	xxxxx			
Shrd ConDel:	xxxxx	xxxx	xxxxx	xxxxx	15.3	xxxxx	xxxxx	xxxx	xxxxx		xxxxx	xxxxx		xxxx		xxxx	xxxxx			
Shared LOS:	*	*	*	*	C	*	*	*	*		*	*		*		*	*			
ApproachDel:	xxxxxx				15.3		xxxxxx					xxxxxx					xxxxxx			
ApproachLOS:	*				C		*					*					*			

Note: Queue reported is the number of cars per lane.

Traffix 8.0.0715 (c) 2008 Dowling Assoc. Licensed to URBAN CROSSROADS, IRVINE

UNIVERISTY CROSSINGS APARTMENTS TRAFFIC IMPACT ANALYSIS (JN 08139)
Existing Plus Ambient Plus Project 2014 Conditions
PM PEAK HOUR

Level Of Service Computation Report
2000 HCM Operations Method (Future Volume Alternative)

Intersection #5 Alabama Street / Lugonia Avenue

Cycle (sec): 95 Critical Vol./Cap.(X): 0.761
Loss Time (sec): 8 Average Delay (sec/veh): 36.7
Optimal Cycle: OPTIMIZED Level Of Service: D

Approach:	North Bound			South Bound			East Bound			West Bound		
Movement:	L - T	- R		L - T	- R		L - T	- R		L - T	- R	
Control:	Protected			Protected			Protected			Protected		
Rights:	Include			Include			Include			Include		
Min. Green:	10	20	20	10	20	20	10	24	24	10	24	24
Y+R:	4.0	4.0	4.0	4.0	4.0	4.0	4.0	4.0	4.0	4.0	4.0	4.0
Lanes:	1 0	2 0	1	1 0	3 0	1	1 0	1 1	0	1 0	2 0	1
Volume Module:												
Base Vol:	116	593	370	134	475	21	130	309	70	342	263	42
Growth Adj:	1.04	1.04	1.04	1.04	1.04	1.04	1.04	1.04	1.04	1.04	1.04	1.04
Initial Bse:	121	617	385	139	494	22	135	321	73	356	274	44
Added Vol:	26	0	0	0	0	19	11	11	14	0	19	0
PasserByVol:	0	0	0	0	0	0	0	0	0	0	0	0
Initial Fut:	147	617	385	139	494	41	146	332	87	356	293	44
User Adj:	1.00	1.00	1.00	1.00	1.00	1.00	1.00	1.00	1.00	1.00	1.00	1.00
PHF Adj:	0.97	0.97	0.97	0.97	0.97	0.97	0.97	0.97	0.97	0.97	0.97	0.97
PHF Volume:	151	634	396	143	508	42	150	342	89	366	301	45
Reduct Vol:	0	0	0	0	0	0	0	0	0	0	0	0
Reduced Vol:	151	634	396	143	508	42	150	342	89	366	301	45
PCE Adj:	1.00	1.00	1.00	1.00	1.00	1.00	1.00	1.00	1.00	1.00	1.00	1.00
MLF Adj:	1.00	1.00	1.00	1.00	1.00	1.00	1.00	1.00	1.00	1.00	1.00	1.00
FinalVolume:	151	634	396	143	508	42	150	342	89	366	301	45
Saturation Flow Module:												
Sat/Lane:	1800	1800	1800	1800	1800	1800	1800	1800	1800	1800	1800	1800
Adjustment:	0.90	1.00	0.85	0.90	1.00	0.85	0.90	0.97	0.97	0.90	1.00	0.85
Lanes:	1.00	2.00	1.00	1.00	3.00	1.00	1.00	1.59	0.41	1.00	2.00	1.00
Final Sat.:	1615	3600	1530	1615	5400	1530	1615	2766	722	1615	3600	1530
Capacity Analysis Module:												
Vol/Sat:	0.09	0.18	0.26	0.09	0.09	0.03	0.09	0.12	0.12	0.23	0.08	0.03
Crit Moves:			****	****				****		****		
Green/Cycle:	0.13	0.30	0.30	0.11	0.27	0.27	0.15	0.25	0.25	0.26	0.36	0.36
Volume/Cap:	0.70	0.59	0.87	0.84	0.35	0.10	0.62	0.49	0.49	0.87	0.23	0.08
Delay/Veh:	48.7	29.4	47.9	71.6	28.2	26.2	42.5	30.7	30.7	51.0	21.2	20.0
User DelAdj:	1.00	1.00	1.00	1.00	1.00	1.00	1.00	1.00	1.00	1.00	1.00	1.00
AdjDel/Veh:	48.7	29.4	47.9	71.6	28.2	26.2	42.5	30.7	30.7	51.0	21.2	20.0
LOS by Move:	D	C	D	E	C	C	D	C	C	D	C	B
HCM2kAvgQ:	6	9	14	7	4	1	5	6	6	14	3	1

Note: Queue reported is the number of cars per lane.

Traffix 8.0.0715 (c) 2008 Dowling Assoc. Licensed to URBAN CROSSROADS, IRVINE

Movement	EBL	EBT	EBR	WBL	WBT	WBR	NBL	NBT	NBR	SBL	SBT	SBR
Lane Configurations												
Volume (vph)	0	0	0	171	329	186	391	1163	0	0	810	319
Ideal Flow (vphpl)	1900	1900	1900	1900	1900	1900	1900	1900	1900	1900	1900	1900
Total Lost time (s)					5.0		4.0	5.0			5.0	
Lane Util. Factor					0.95		1.00	0.95			0.95	
Frpb, ped/bikes					0.99		1.00	1.00			1.00	
Flpb, ped/bikes					1.00		1.00	1.00			1.00	
Frt					0.96		1.00	1.00			0.96	
Flt Protected					0.99		0.95	1.00			1.00	
Satd. Flow (prot)					3403		1805	3610			3457	
Flt Permitted					0.99		0.95	1.00			1.00	
Satd. Flow (perm)					3403		1805	3610			3457	
Peak-hour factor, PHF	0.97	0.97	0.97	0.97	0.97	0.97	0.97	0.97	0.97	0.97	0.97	0.97
Adj. Flow (vph)	0	0	0	176	339	192	403	1199	0	0	835	329
RTOR Reduction (vph)	0	0	0	0	39	0	0	0	0	0	39	0
Lane Group Flow (vph)	0	0	0	0	668	0	403	1199	0	0	1125	0
Confl. Peds. (#/hr)						5						
Heavy Vehicles (%)	0%	0%	0%	0%	0%	0%	0%	0%	0%	0%	0%	0%
Turn Type				Split			Prot					
Protected Phases				4	4		1	6			2	
Permitted Phases												
Actuated Green, G (s)					21.9		25.2	68.1			38.9	
Effective Green, g (s)					21.9		25.2	68.1			38.9	
Actuated g/C Ratio					0.22		0.25	0.68			0.39	
Clearance Time (s)					5.0		4.0	5.0			5.0	
Vehicle Extension (s)					2.0		2.0	2.0			2.0	
Lane Grp Cap (vph)					745		455	2458			1345	
v/s Ratio Prot					c0.20		c0.22	0.33			c0.33	
v/s Ratio Perm												
v/c Ratio					0.90		0.89	0.49			0.84	
Uniform Delay, d1					37.9		36.0	7.6			27.7	
Progression Factor					1.00		0.87	1.93			1.00	
Incremental Delay, d2					13.1		13.1	0.5			6.3	
Delay (s)					51.1		44.6	15.2			34.0	
Level of Service					D		D	B			C	
Approach Delay (s)		0.0			51.1			22.6			34.0	
Approach LOS		A			D			C			C	

Intersection Summary			
HCM Average Control Delay	32.2	HCM Level of Service	C
HCM Volume to Capacity ratio	0.87		
Actuated Cycle Length (s)	100.0	Sum of lost time (s)	14.0
Intersection Capacity Utilization	86.1%	ICU Level of Service	E
Analysis Period (min)	15		
c Critical Lane Group			

Movement	EBL	EBT	EBR	WBL	WBT	WBR	NBL	NBT	NBR	SBL	SBT	SBR
Lane Configurations												
Volume (vph)	479	4	439	0	0	0	0	1075	280	227	756	0
Ideal Flow (vphpl)	1900	1900	1900	1900	1900	1900	1900	1900	1900	1900	1900	1900
Total Lost time (s)		5.0						5.0	5.0	4.0	5.0	
Lane Util. Factor		0.95						0.95	1.00	1.00	0.95	
Frpb, ped/bikes		1.00						1.00	0.98	1.00	1.00	
Flpb, ped/bikes		1.00						1.00	1.00	1.00	1.00	
Frt		0.93						1.00	0.85	1.00	1.00	
Flt Protected		0.97						1.00	1.00	0.95	1.00	
Satd. Flow (prot)		3267						3610	1581	1805	3610	
Flt Permitted		0.97						1.00	1.00	0.95	1.00	
Satd. Flow (perm)		3267						3610	1581	1805	3610	
Peak-hour factor, PHF	0.99	0.99	0.99	0.99	0.99	0.99	0.99	0.99	0.99	0.99	0.99	0.99
Adj. Flow (vph)	484	4	443	0	0	0	0	1086	283	229	764	0
RTOR Reduction (vph)	0	155	0	0	0	0	0	0	157	0	0	0
Lane Group Flow (vph)	0	776	0	0	0	0	0	1086	126	229	764	0
Confl. Peds. (#/hr)									5			
Heavy Vehicles (%)	0%	0%	0%	0%	0%	0%	0%	0%	0%	0%	0%	0%
Turn Type	Split								Perm	Prot		
Protected Phases	8	8						6		5	2	
Permitted Phases									6			
Actuated Green, G (s)		26.7						44.4	44.4	14.9	63.3	
Effective Green, g (s)		26.7						44.4	44.4	14.9	63.3	
Actuated g/C Ratio		0.27						0.44	0.44	0.15	0.63	
Clearance Time (s)		5.0						5.0	5.0	4.0	5.0	
Vehicle Extension (s)		2.0						2.0	2.0	2.0	2.0	
Lane Grp Cap (vph)		872						1603	702	269	2285	
v/s Ratio Prot		c0.24						c0.30		c0.13	0.21	
v/s Ratio Perm									0.08			
v/c Ratio		0.89						0.68	0.18	0.85	0.33	
Uniform Delay, d1		35.2						22.1	16.8	41.5	8.5	
Progression Factor		1.00						1.00	1.00	0.75	0.43	
Incremental Delay, d2		10.7						2.3	0.6	12.0	0.2	
Delay (s)		45.9						24.4	17.3	42.9	3.8	
Level of Service		D						C	B	D	A	
Approach Delay (s)		45.9			0.0			23.0			12.9	
Approach LOS		D			A			C			B	

Intersection Summary			
HCM Average Control Delay	26.4	HCM Level of Service	C
HCM Volume to Capacity ratio	0.77		
Actuated Cycle Length (s)	100.0	Sum of lost time (s)	14.0
Intersection Capacity Utilization	86.1%	ICU Level of Service	E
Analysis Period (min)	15		
c Critical Lane Group			

UNIVERISTY CROSSINGS APARTMENTS TRAFFIC IMPACT ANALYSIS (JN 08139)
Existing Plus Ambient Plus Project 2014 Conditions
PM PEAK HOUR

Level Of Service Computation Report
2000 HCM Operations Method (Future Volume Alternative)

Intersection #8 Alabama Street / Redlands Boulevard

Cycle (sec): 105 Critical Vol./Cap.(X): 0.770
Loss Time (sec): 8 Average Delay (sec/veh): 40.9
Optimal Cycle: OPTIMIZED Level Of Service: D

Approach:	North Bound			South Bound			East Bound			West Bound		
Movement:	L - T - R			L - T - R			L - T - R			L - T - R		
Control:	Split Phase			Split Phase			Protected			Protected		
Rights:	Include			Include			Include			Include		
Min. Green:	25	25	25	25	25	25	10	23	23	10	23	23
Y+R:	4.0	4.0	4.0	4.0	4.0	4.0	4.0	4.0	4.0	4.0	4.0	4.0
Lanes:	1 0	1 1	0	1 0	1 1	0	1 0	2 0	1	1 0	2 0	1
Volume Module:												
Base Vol:	67	525	77	127	537	104	273	530	78	86	347	153
Growth Adj:	1.04	1.04	1.04	1.04	1.04	1.04	1.04	1.04	1.04	1.04	1.04	1.04
Initial Bse:	70	546	80	132	559	108	284	551	81	89	361	159
Added Vol:	0	6	0	4	4	0	0	0	0	0	0	6
PasserByVol:	0	0	0	0	0	0	0	0	0	0	0	0
Initial Fut:	70	552	80	136	563	108	284	551	81	89	361	165
User Adj:	1.00	1.00	1.00	1.00	1.00	1.00	1.00	1.00	1.00	1.00	1.00	1.00
PHF Adj:	0.92	0.92	0.92	0.92	0.92	0.92	0.92	0.92	0.92	0.92	0.92	0.92
PHF Volume:	76	601	87	148	612	118	309	600	88	97	393	180
Reduct Vol:	0	0	0	0	0	0	0	0	0	0	0	0
Reduced Vol:	76	601	87	148	612	118	309	600	88	97	393	180
PCE Adj:	1.00	1.00	1.00	1.00	1.00	1.00	1.00	1.00	1.00	1.00	1.00	1.00
MLF Adj:	1.00	1.00	1.00	1.00	1.00	1.00	1.00	1.00	1.00	1.00	1.00	1.00
FinalVolume:	76	601	87	148	612	118	309	600	88	97	393	180
Saturation Flow Module:												
Sat/Lane:	1800	1800	1800	1800	1800	1800	1800	1800	1800	1800	1800	1800
Adjustment:	0.90	0.98	0.98	0.90	0.98	0.98	0.90	1.00	0.85	0.90	1.00	0.85
Lanes:	1.00	1.75	0.25	1.00	1.68	0.32	1.00	2.00	1.00	1.00	2.00	1.00
Final Sat.:	1615	3084	447	1615	2947	567	1615	3600	1530	1615	3600	1530
Capacity Analysis Module:												
Vol/Sat:	0.05	0.19	0.19	0.09	0.21	0.21	0.19	0.17	0.06	0.06	0.11	0.12
Crit Moves:		****			****		****					****
Green/Cycle:	0.24	0.24	0.24	0.24	0.24	0.24	0.22	0.31	0.31	0.13	0.22	0.22
Volume/Cap:	0.20	0.82	0.82	0.38	0.86	0.86	0.86	0.54	0.19	0.45	0.50	0.54
Delay/Veh:	32.2	44.2	44.2	33.7	46.5	46.5	56.9	30.7	26.8	43.4	36.4	38.0
User DelAdj:	1.00	1.00	1.00	1.00	1.00	1.00	1.00	1.00	1.00	1.00	1.00	1.00
AdjDel/Veh:	32.2	44.2	44.2	33.7	46.5	46.5	56.9	30.7	26.8	43.4	36.4	38.0
LOS by Move:	C	D	D	C	D	D	E	C	C	D	D	D
HCM2kAvgQ:	2	13	13	4	14	14	13	8	2	4	6	6

Note: Queue reported is the number of cars per lane.

Traffix 8.0.0715 (c) 2008 Dowling Assoc. Licensed to URBAN CROSSROADS, IRVINE

APPENDIX 5.3

Existing Plus Ambient Growth Plus Project (2014) Conditions
Traffic Signal Warrant Analysis Worksheets

Figure 4C-103 (CA). Traffic Signal Warrants Worksheet
(Average Traffic Estimate Form)

DIST	CO	RTE	PM

TRAFFIC CONDITIONS **EAP (2014)**

CALC CH DATE 02/24/12

CHK CH DATE 02/24/12

Jurisdiction: **County of San Bernardino**

Major Street: **Lugonia Avenue**

Minor Street: **Driveway 2**

Critical Approach Speed (Major) 45

Critical Approach Speed (Minor) 25

Major Street Approach Lanes = **2**

Minor Street Approach Lanes **1**

Major Street Future ADT = **10,750** d

Minor Street Future ADT = **950** d

Speed limit or critical speed on major street traffic > 64 km/h (40 mph); ……... [√]

or **RURAL (R)**

In built up area of isolated community of < 10,000 population …….. [ ]

(Based on Estimated Average Daily Traffic - See Note)

URBAN	RURAL	Minimum Requirements EADT			
	XX				
CONDITION A - Minimum Vehicular Volume					
Satisfied	Not Satisfied				
	XX				
Number of lanes for moving traffic on each approach		Vehicles Per Day on Major Street (Total of Both Approaches)		Vehicles Per Day on Higher-Volume Minor Street Approach (One Direction Only)	
Major Street	Minor Street	Urban	Rural	Urban	Rural
1	*1*	8,000	5,600	2,400	1,680
2 + **10,750**	*1* **950**	9,600	6,720 *	2,400	1,680
2 +	*2 +*	9,600	6,720	3,200	2,240
1	*2 +*	8,000	5,600	3,200	2,240
CONDITION B - Interruption of Continuous Traffic					
Satisfied	Not Satisfied				
	XX				
Number of lanes for moving traffic on each approach		Vehicles Per Day on Major Street (Total of Both Approaches)		Vehicles Per Day on Higher-Volume Minor Street Approach (One Direction Only)	
Major Street	Minor Street	Urban	Rural	Urban	Rural
1	*1*	12,000	8,400	1,200	850
2 +	*1* **950**	14,400	10,080	1,200	850 *
2 +	*2 +*	14,400	10,080	1,600	1,120
1	*2 +*	12,000	8,400	1,600	1,120
Combination of CONDITIONS A + B					
Satisfied	Not Satisfied				
	XX	2 CONDITIONS 80%		2 CONDITIONS 80%	
No one condition satisfied, but following conditions fulfilled 80% of more …..	**A** 57% / **B** 100%				

Note: To be used only for NEW INTERSECTIONS or other locations where it is not reasonable to count actual traffic volumes.

The satisfaction of a traffic signal warrant or warrants shall not in itself require the installation of a traffic control signal.

This Page Intentionally Left Blank

APPENDIX 6.1

Existing Plus Ambient Growth Plus Project Plus Cumulative (2014) Conditions
Intersection Operations Analysis Worksheets

UNIVERISTY CROSSINGS APARTMENTS TRAFFIC IMPACT ANALYSIS (JN 08139)
Existing Plus Ambient Plus Project Plus Cumulative 2014 Conditions
AM PEAK HOUR

Level Of Service Computation Report
2000 HCM Operations Method (Future Volume Alternative)

Intersection #1 California Street / Lugonia Avenue

Cycle (sec): 90 Critical Vol./Cap.(X): 0.425
Loss Time (sec): 6 Average Delay (sec/veh): 23.3
Optimal Cycle: OPTIMIZED Level Of Service: C

Approach:	North Bound			South Bound			East Bound			West Bound		
Movement:	L - T - R			L - T - R			L - T - R			L - T - R		
Control:	Permitted			Permitted			Split Phase			Split Phase		
Rights:	Include			Include			Include			Include		
Min. Green:	10	10	10	28	28	28	30	30	30	10	10	10
Y+R:	4.0	4.0	4.0	4.0	4.0	4.0	4.0	4.0	4.0	4.0	4.0	4.0
Lanes:	1 0	1 0	1	1 0	2 0	1	0 1	0 0	1	0 0	1! 0	0
Volume Module:												
Base Vol:	190	357	123	13	201	9	2	10	38	37	68	27
Growth Adj:	1.04	1.04	1.04	1.04	1.04	1.04	1.04	1.04	1.04	1.04	1.04	1.04
Initial Bse:	198	371	128	14	209	9	2	10	40	38	71	28
Added Vol:	5	69	6	2	41	0	1	13	3	20	35	7
PasserByVol:	0	0	0	0	0	0	0	0	0	0	0	0
Initial Fut:	203	440	134	16	250	9	3	23	43	58	106	35
User Adj:	1.00	1.00	1.00	1.00	1.00	1.00	1.00	1.00	1.00	1.00	1.00	1.00
PHF Adj:	0.95	0.95	0.95	0.95	0.95	0.95	0.95	0.95	0.95	0.95	0.95	0.95
PHF Volume:	213	464	141	16	263	10	3	25	45	62	111	37
Reduct Vol:	0	0	0	0	0	0	0	0	0	0	0	0
Reduced Vol:	213	464	141	16	263	10	3	25	45	62	111	37
PCE Adj:	1.00	1.00	1.00	1.00	1.00	1.00	1.00	1.00	1.00	1.00	1.00	1.00
MLF Adj:	1.00	1.00	1.00	1.00	1.00	1.00	1.00	1.00	1.00	1.00	1.00	1.00
FinalVolume:	213	464	141	16	263	10	3	25	45	62	111	37
Saturation Flow Module:												
Sat/Lane:	1800	1800	1800	1800	1800	1800	1800	1800	1800	1800	1800	1800
Adjustment:	0.52	1.00	0.85	0.25	1.00	0.85	0.94	0.99	0.85	0.91	0.96	0.96
Lanes:	1.00	1.00	1.00	1.00	2.00	1.00	0.12	0.88	1.00	0.31	0.52	0.17
Final Sat.:	942	1800	1530	457	3600	1530	207	1570	1530	500	903	300
Capacity Analysis Module:												
Vol/Sat:	0.23	0.26	0.09	0.04	0.07	0.01	0.02	0.02	0.03	0.12	0.12	0.12
Crit Moves:		****					****			****		
Green/Cycle:	0.41	0.41	0.41	0.41	0.41	0.41	0.33	0.33	0.33	0.19	0.19	0.19
Volume/Cap:	0.56	0.63	0.23	0.09	0.18	0.02	0.05	0.05	0.09	0.63	0.63	0.63
Delay/Veh:	22.4	23.2	17.7	16.7	17.2	16.0	20.4	20.4	20.7	37.3	37.3	37.3
User DelAdj:	1.00	1.00	1.00	1.00	1.00	1.00	1.00	1.00	1.00	1.00	1.00	1.00
AdjDel/Veh:	22.4	23.2	17.7	16.7	17.2	16.0	20.4	20.4	20.7	37.3	37.3	37.3
LOS by Move:	C	C	B	B	B	B	C	C	C	D	D	D
HCM2kAvgQ:	6	11	3	0	2	0	1	1	1	6	6	6

Note: Queue reported is the number of cars per lane.

Traffix 8.0.0715 (c) 2008 Dowling Assoc. Licensed to URBAN CROSSROADS, IRVINE

UNIVERISTY CROSSINGS APARTMENTS TRAFFIC IMPACT ANALYSIS (JN 08139)
Existing Plus Ambient Plus Project Plus Cumulative 2014 Conditions
AM PEAK HOUR

Level Of Service Computation Report
2000 HCM 4-Way Stop Method (Future Volume Alternative)

Intersection #2 Nevada Street / Lugonia Avenue

Cycle (sec):	0	Critical Vol./Cap.(X):	0.599
Loss Time (sec):	0	Average Delay (sec/veh):	13.2
Optimal Cycle:	0	Level Of Service:	B

Approach:	North Bound			South Bound			East Bound			West Bound		
Movement:	L -	T -	R	L -	T -	R	L -	T -	R	L -	T -	R
Control:	Stop Sign			Stop Sign			Stop Sign			Stop Sign		
Rights:	Include			Include			Include			Include		
Min. Green:	0	0	0	0	0	0	0	0	0	0	0	0
Lanes:	0 1	0 0	1	0 0	1! 0	0	0 1	0 0	1	0 0	1! 0	0
Volume Module:												
Base Vol:	34	82	26	8	122	13	12	50	30	89	120	11
Growth Adj:	1.04	1.04	1.04	1.04	1.04	1.04	1.04	1.04	1.04	1.04	1.04	1.04
Initial Bse:	35	85	27	8	127	14	12	52	31	93	125	11
Added Vol:	3	12	13	9	6	0	0	16	5	39	59	20
PasserByVol:	0	0	0	0	0	0	0	0	0	0	0	0
Initial Fut:	38	97	40	17	133	14	12	68	36	132	184	31
User Adj:	1.00	1.00	1.00	1.00	1.00	1.00	1.00	1.00	1.00	1.00	1.00	1.00
PHF Adj:	0.95	0.95	0.95	0.95	0.95	0.95	0.95	0.95	0.95	0.95	0.95	0.95
PHF Volume:	40	102	42	18	140	14	13	72	38	139	194	33
Reduct Vol:	0	0	0	0	0	0	0	0	0	0	0	0
Reduced Vol:	40	102	42	18	140	14	13	72	38	139	194	33
PCE Adj:	1.00	1.00	1.00	1.00	1.00	1.00	1.00	1.00	1.00	1.00	1.00	1.00
MLF Adj:	1.00	1.00	1.00	1.00	1.00	1.00	1.00	1.00	1.00	1.00	1.00	1.00
FinalVolume:	40	102	42	18	140	14	13	72	38	139	194	33
Saturation Flow Module:												
Adjustment:	1.00	1.00	1.00	1.00	1.00	1.00	1.00	1.00	1.00	1.00	1.00	1.00
Lanes:	0.28	0.72	1.00	0.11	0.81	0.08	0.16	0.84	1.00	0.38	0.53	0.09
Final Sat.:	152	386	616	58	446	45	86	466	627	231	323	55
Capacity Analysis Module:												
Vol/Sat:	0.27	0.27	0.07	0.31	0.31	0.31	0.15	0.15	0.06	0.60	0.60	0.60
Crit Moves:	****			****				****			****	
Delay/Veh:	11.0	11.0	8.5	11.7	11.7	11.7	9.8	9.8	8.4	16.5	16.5	16.5
Delay Adj:	1.00	1.00	1.00	1.00	1.00	1.00	1.00	1.00	1.00	1.00	1.00	1.00
AdjDel/Veh:	11.0	11.0	8.5	11.7	11.7	11.7	9.8	9.8	8.4	16.5	16.5	16.5
LOS by Move:	B	B	A	B	B	B	A	A	A	C	C	C
ApproachDel:	10.5			11.7			9.4			16.5		
Delay Adj:	1.00			1.00			1.00			1.00		
ApprAdjDel:	10.5			11.7			9.4			16.5		
LOS by Appr:	B			B			A			C		
AllWayAvgQ:	0.3	0.3	0.1	0.4	0.4	0.4	0.2	0.2	0.1	1.3	1.3	1.3

Note: Queue reported is the number of cars per lane.

Traffix 8.0.0715 (c) 2008 Dowling Assoc. Licensed to URBAN CROSSROADS, IRVINE

UNIVERISTY CROSSINGS APARTMENTS TRAFFIC IMPACT ANALYSIS (JN 08139)
Existing Plus Ambient Plus Project Plus Cumulative 2014 Conditions
AM PEAK HOUR

Level Of Service Computation Report
2000 HCM Unsignalized Method (Future Volume Alternative)

Intersection #3 Driveway 1 / Lugonia Avenue

Average Delay (sec/veh): 0.2 Worst Case Level Of Service: A[9.2]

Approach:	North Bound					South Bound					East Bound					West Bound				
Movement:	L	-	T	-	R	L	-	T	-	R	L	-	T	-	R	L	-	T	-	R
Control:	Stop Sign					Stop Sign					Uncontrolled					Uncontrolled				
Rights:	Include					Include					Include					Include				
Lanes:	0	0	0	0	0	0	0	0	0	1	0	0	1	0	0	0	0	1	1	0
Volume Module:																				
Base Vol:	0	0	0	0	0	0	0	0	0	0	0	84	0	0	0	0	220	0		
Growth Adj:	1.04	1.04	1.04	1.04	1.04	1.04	1.04	1.04	1.04	1.04	1.04	1.04	1.04	1.04	1.04	1.04	1.04	1.04		
Initial Bse:	0	0	0	0	0	0	0	0	0	0	0	87	0	0	0	0	229	0		
Added Vol:	0	0	0	0	0	13	0	0	0	0	0	38	0	0	0	0	110	3		
PasserByVol:	0	0	0	0	0	0	0	0	0	0	0	0	0	0	0	0	0	0		
Initial Fut:	0	0	0	0	0	13	0	0	0	0	0	125	0	0	0	0	339	3		
User Adj:	1.00	1.00	1.00	1.00	1.00	1.00	1.00	1.00	1.00	1.00	1.00	1.00	1.00	1.00	1.00	1.00	1.00	1.00		
PHF Adj:	0.95	0.95	0.95	0.95	0.95	0.95	0.95	0.95	0.95	0.95	0.95	0.95	0.95	0.95	0.95	0.95	0.95	0.95		
PHF Volume:	0	0	0	0	0	14	0	0	0	0	0	132	0	0	0	0	357	3		
Reduct Vol:	0	0	0	0	0	0	0	0	0	0	0	0	0	0	0	0	0	0		
FinalVolume:	0	0	0	0	0	14	0	0	0	0	0	132	0	0	0	0	357	3		
Critical Gap Module:																				
Critical Gp:	xxxxx	xxxx	xxxxx	xxxxx	xxxx	6.2	xxxxx	xxxx	xxxxx	xxxxx	xxxx	xxxxx								
FollowUpTim:	xxxxx	xxxx	xxxxx	xxxxx	xxxx	3.3	xxxxx	xxxx	xxxxx	xxxxx	xxxx	xxxxx								
Capacity Module:																				
Cnflict Vol:	xxxx	xxxx	xxxxx	xxxx	xxxx	180	xxxx	xxxx	xxxxx	xxxx	xxxx	xxxxx								
Potent Cap.:	xxxx	xxxx	xxxxx	xxxx	xxxx	868	xxxx	xxxx	xxxxx	xxxx	xxxx	xxxxx								
Move Cap.:	xxxx	xxxx	xxxxx	xxxx	xxxx	868	xxxx	xxxx	xxxxx	xxxx	xxxx	xxxxx								
Volume/Cap:	xxxx	xxxx	xxxx	xxxx	xxxx	0.02	xxxx	xxxx	xxxx	xxxx	xxxx	xxxx								
Level Of Service Module:																				
2Way95thQ:	xxxx	xxxx	xxxxx	xxxx	xxxx	0.0	xxxx	xxxx	xxxxx	xxxx	xxxx	xxxxx								
Control Del:	xxxxx	xxxx	xxxxx	xxxxx	xxxx	9.2	xxxxx	xxxx	xxxxx	xxxxx	xxxx	xxxxx								
LOS by Move:	*	*	*	*	*	A	*	*	*	*	*	*								
Movement:	LT	-	LTR	-	RT	LT	-	LTR	-	RT	LT	-	LTR	-	RT	LT	-	LTR	-	RT
Shared Cap.:	xxxx	xxxx	xxxxx	xxxx	xxxx	xxxxx	xxxx	xxxx	xxxxx	xxxx	xxxx	xxxxx								
SharedQueue:	xxxxx	xxxx	xxxxx	xxxxx	xxxx	xxxxx	xxxxx	xxxx	xxxxx	xxxxx	xxxx	xxxxx								
Shrd ConDel:	xxxxx	xxxx	xxxxx	xxxxx	xxxx	xxxxx	xxxxx	xxxx	xxxxx	xxxxx	xxxx	xxxxx								
Shared LOS:	*	*	*	*	*	*	*	*	*	*	*	*								
ApproachDel:	xxxxxx					9.2			xxxxxx				xxxxxx							
ApproachLOS:	*					A			*				*							

Note: Queue reported is the number of cars per lane.

Traffix 8.0.0715 (c) 2008 Dowling Assoc. Licensed to URBAN CROSSROADS, IRVINE

```
-------------------------------------------------------------------------------
      UNIVERISTY CROSSINGS APARTMENTS TRAFFIC IMPACT ANALYSIS (JN 08139)
      Existing Plus Ambient Plus Project Plus Cumulative 2014 Conditions
                                AM PEAK HOUR
-------------------------------------------------------------------------------
                      Level Of Service Computation Report
           2000 HCM Unsignalized Method (Future Volume Alternative)
*******************************************************************************
Intersection #4 Driveway 2 / Lugonia Avenue
*******************************************************************************
Average Delay (sec/veh):      2.8       Worst Case Level Of Service: B[ 11.6]
*******************************************************************************
Approach:      North Bound      South Bound       East Bound       West Bound
Movement:     L  -  T  -  R    L  -  T  -  R    L  -  T  -  R    L  -  T  -  R
------------|---------------||---------------||---------------||---------------|
Control:        Stop Sign        Stop Sign       Uncontrolled     Uncontrolled
Rights:           Include          Include          Include          Include
Lanes:        0  0  0  0  0    0  0  1! 0  0    1  0  1  0  0    0  0  1  1  0
------------|---------------||---------------||---------------||---------------|
Volume Module:
Base Vol:       0    0     0     0    0     0     0   84     0     0  220     0
Growth Adj:  1.04 1.04  1.04  1.04 1.04  1.04  1.04 1.04  1.04  1.04 1.04  1.04
Initial Bse:    0    0     0     0    0     0     0   87     0     0  229     0
Added Vol:      0    0     0    66    0    53    16   22     0     0   61    13
PasserByVol:    0    0     0     0    0     0     0    0     0     0    0     0
Initial Fut:    0    0     0    66    0    53    16  109     0     0  290    13
User Adj:    1.00 1.00  1.00  1.00 1.00  1.00  1.00 1.00  1.00  1.00 1.00  1.00
PHF Adj:     0.95 0.95  0.95  0.95 0.95  0.95  0.95 0.95  0.95  0.95 0.95  0.95
PHF Volume:     0    0     0    69    0    56    17  115     0     0  305    14
Reduct Vol:     0    0     0     0    0     0     0    0     0     0    0     0
FinalVolume:    0    0     0    69    0    56    17  115     0     0  305    14
------------|---------------||---------------||---------------||---------------|
Critical Gap Module:
Critical Gp:xxxxx xxxx xxxxx   6.4  6.5   6.2   4.1 xxxx xxxxx xxxxx xxxx xxxxx
FollowUpTim:xxxxx xxxx xxxxx   3.5  4.0   3.3   2.2 xxxx xxxxx xxxxx xxxx xxxxx
------------|---------------||---------------||---------------||---------------|
Capacity Module:
Cnflict Vol: xxxx xxxx xxxxx   461  461   159   319 xxxx xxxxx  xxxx xxxx xxxxx
Potent Cap.: xxxx xxxx xxxxx   562  500   891  1253 xxxx xxxxx  xxxx xxxx xxxxx
Move Cap.:   xxxx xxxx xxxxx   557  494   891  1253 xxxx xxxxx  xxxx xxxx xxxxx
Volume/Cap:  xxxx xxxx  xxxx  0.12 0.00  0.06  0.01 xxxx  xxxx  xxxx xxxx  xxxx
------------|---------------||---------------||---------------||---------------|
Level Of Service Module:
2Way95thQ:   xxxx xxxx xxxxx  xxxx xxxx xxxxx   0.0 xxxx xxxxx  xxxx xxxx xxxxx
Control Del:xxxxx xxxx xxxxx xxxxx xxxx xxxxx   7.9 xxxx xxxxx xxxxx xxxx xxxxx
LOS by Move:    *    *     *     *    *     *     A    *     *     *    *     *
Movement:     LT - LTR - RT    LT - LTR - RT    LT - LTR - RT    LT - LTR - RT
Shared Cap.: xxxx xxxx xxxxx  xxxx  668 xxxxx  xxxx xxxx xxxxx  xxxx xxxx xxxxx
SharedQueue:xxxxx xxxx xxxxx xxxxx  0.7 xxxxx xxxxx xxxx xxxxx xxxxx xxxx xxxxx
Shrd ConDel:xxxxx xxxx xxxxx xxxxx 11.6 xxxxx xxxxx xxxx xxxxx xxxxx xxxx xxxxx
Shared LOS:     *    *     *     *    B     *     *    *     *     *    *     *
ApproachDel:    xxxxxx             11.6           xxxxxx           xxxxxx
ApproachLOS:         *               B                *                *
*******************************************************************************
Note: Queue reported is the number of cars per lane.
*******************************************************************************


  Traffix 8.0.0715 (c) 2008 Dowling Assoc. Licensed to URBAN CROSSROADS, IRVINE
```

UNIVERISTY CROSSINGS APARTMENTS TRAFFIC IMPACT ANALYSIS (JN 08139)
Existing Plus Ambient Plus Project Plus Cumulative 2014 Conditions
AM PEAK HOUR

Level Of Service Computation Report
2000 HCM Operations Method (Future Volume Alternative)

Intersection #5 Alabama Street / Lugonia Avenue

Cycle (sec): 75 Critical Vol./Cap.(X): 0.393
Loss Time (sec): 8 Average Delay (sec/veh): 23.9
Optimal Cycle: OPTIMIZED Level Of Service: C

Approach:	North Bound			South Bound			East Bound			West Bound		
Movement:	L - T - R			L - T - R			L - T - R			L - T - R		
Control:	Protected			Protected			Protected			Protected		
Rights:	Include			Include			Include			Include		
Min. Green:	10	20	20	10	20	20	10	24	24	10	24	24
Y+R:	4.0	4.0	4.0	4.0	4.0	4.0	4.0	4.0	4.0	4.0	4.0	4.0
Lanes:	1 0	2 0	1	1 0	3 0	1	1 0	1 1	0	1 0	2 0	1
Volume Module:												
Base Vol:	87	284	141	43	335	57	42	80	35	159	203	30
Growth Adj:	1.04	1.04	1.04	1.04	1.04	1.04	1.04	1.04	1.04	1.04	1.04	1.04
Initial Bse:	91	295	147	45	349	59	44	83	36	165	211	31
Added Vol:	22	161	15	18	116	7	21	28	34	19	29	29
PasserByVol:	0	0	0	0	0	0	0	0	0	0	0	0
Initial Fut:	113	456	162	63	465	66	65	111	70	184	240	60
User Adj:	1.00	1.00	1.00	1.00	1.00	1.00	1.00	1.00	1.00	1.00	1.00	1.00
PHF Adj:	0.95	0.95	0.95	0.95	0.95	0.95	0.95	0.95	0.95	0.95	0.95	0.95
PHF Volume:	118	480	170	66	489	70	68	117	74	194	253	63
Reduct Vol:	0	0	0	0	0	0	0	0	0	0	0	0
Reduced Vol:	118	480	170	66	489	70	68	117	74	194	253	63
PCE Adj:	1.00	1.00	1.00	1.00	1.00	1.00	1.00	1.00	1.00	1.00	1.00	1.00
MLF Adj:	1.00	1.00	1.00	1.00	1.00	1.00	1.00	1.00	1.00	1.00	1.00	1.00
FinalVolume:	118	480	170	66	489	70	68	117	74	194	253	63
Saturation Flow Module:												
Sat/Lane:	1800	1800	1800	1800	1800	1800	1800	1800	1800	1800	1800	1800
Adjustment:	0.90	1.00	0.85	0.90	1.00	0.85	0.90	0.94	0.94	0.90	1.00	0.85
Lanes:	1.00	2.00	1.00	1.00	3.00	1.00	1.00	1.22	0.78	1.00	2.00	1.00
Final Sat.:	1615	3600	1530	1615	5400	1530	1615	2077	1315	1615	3600	1530
Capacity Analysis Module:												
Vol/Sat:	0.07	0.13	0.11	0.04	0.09	0.05	0.04	0.06	0.06	0.12	0.07	0.04
Crit Moves:		****		****				****		****		
Green/Cycle:	0.13	0.27	0.27	0.13	0.27	0.27	0.15	0.32	0.32	0.17	0.35	0.35
Volume/Cap:	0.55	0.50	0.42	0.31	0.34	0.17	0.29	0.18	0.18	0.69	0.20	0.12
Delay/Veh:	33.4	23.7	23.4	30.2	22.3	21.3	29.3	18.5	18.5	36.4	17.2	16.7
User DelAdj:	1.00	1.00	1.00	1.00	1.00	1.00	1.00	1.00	1.00	1.00	1.00	1.00
AdjDel/Veh:	33.4	23.7	23.4	30.2	22.3	21.3	29.3	18.5	18.5	36.4	17.2	16.7
LOS by Move:	C	C	C	C	C	C	C	B	B	D	B	B
HCM2kAvgQ:	4	5	4	2	3	1	2	2	2	6	2	1

Note: Queue reported is the number of cars per lane.

Traffix 8.0.0715 (c) 2008 Dowling Assoc. Licensed to URBAN CROSSROADS, IRVINE

Movement	EBL	EBT	EBR	WBL	WBT	WBR	NBL	NBT	NBR	SBL	SBT	SBR
Lane Configurations												
Volume (vph)	0	0	0	262	326	310	367	637	0	0	484	183
Ideal Flow (vphpl)	1900	1900	1900	1900	1900	1900	1900	1900	1900	1900	1900	1900
Total Lost time (s)					5.0		4.0	5.0			5.0	
Lane Util. Factor					0.95		1.00	0.95			0.95	
Frpb, ped/bikes					0.99		1.00	1.00			1.00	
Flpb, ped/bikes					1.00		1.00	1.00			1.00	
Frt					0.95		1.00	1.00			0.96	
Flt Protected					0.99		0.95	1.00			1.00	
Satd. Flow (prot)					3353		1805	3610			3461	
Flt Permitted					0.99		0.95	1.00			1.00	
Satd. Flow (perm)					3353		1805	3610			3461	
Peak-hour factor, PHF	0.95	0.95	0.95	0.95	0.95	0.95	0.95	0.95	0.95	0.95	0.95	0.95
Adj. Flow (vph)	0	0	0	276	343	326	386	671	0	0	509	193
RTOR Reduction (vph)	0	0	0	0	69	0	0	0	0	0	38	0
Lane Group Flow (vph)	0	0	0	0	876	0	386	671	0	0	664	0
Confl. Peds. (#/hr)						5						
Heavy Vehicles (%)	0%	0%	0%	0%	0%	0%	0%	0%	0%	0%	0%	0%
Turn Type				Split			Prot					
Protected Phases				4	4		1	6			2	
Permitted Phases												
Actuated Green, G (s)					23.0		24.5	67.0			38.5	
Effective Green, g (s)					23.0		24.5	67.0			38.5	
Actuated g/C Ratio					0.23		0.24	0.67			0.38	
Clearance Time (s)					5.0		4.0	5.0			5.0	
Vehicle Extension (s)					2.0		2.0	2.0			2.0	
Lane Grp Cap (vph)					771		442	2419			1332	
v/s Ratio Prot					c0.26		c0.21	0.19			c0.19	
v/s Ratio Perm												
v/c Ratio					1.14		0.87	0.28			0.50	
Uniform Delay, d1					38.5		36.3	6.7			23.4	
Progression Factor					1.00		1.02	1.71			1.00	
Incremental Delay, d2					77.1		15.4	0.3			1.3	
Delay (s)					115.6		52.4	11.7			24.7	
Level of Service					F		D	B			C	
Approach Delay (s)		0.0			115.6			26.6			24.7	
Approach LOS		A			F			C			C	

Intersection Summary			
HCM Average Control Delay	57.2	HCM Level of Service	E
HCM Volume to Capacity ratio	0.78		
Actuated Cycle Length (s)	100.0	Sum of lost time (s)	14.0
Intersection Capacity Utilization	78.0%	ICU Level of Service	D
Analysis Period (min)	15		
c Critical Lane Group			

Movement	EBL	EBT	EBR	WBL	WBT	WBR	NBL	NBT	NBR	SBL	SBT	SBR
Lane Configurations												
Volume (vph)	260	27	406	0	0	0	0	745	131	83	681	0
Ideal Flow (vphpl)	1900	1900	1900	1900	1900	1900	1900	1900	1900	1900	1900	1900
Total Lost time (s)		5.0						5.0	5.0	4.0	5.0	
Lane Util. Factor		0.95						0.95	1.00	1.00	0.95	
Frpb, ped/bikes		1.00						1.00	0.98	1.00	1.00	
Flpb, ped/bikes		1.00						1.00	1.00	1.00	1.00	
Frt		0.91						1.00	0.85	1.00	1.00	
Flt Protected		0.98						1.00	1.00	0.95	1.00	
Satd. Flow (prot)		3232						3610	1581	1805	3610	
Flt Permitted		0.98						1.00	1.00	0.95	1.00	
Satd. Flow (perm)		3232						3610	1581	1805	3610	
Peak-hour factor, PHF	0.95	0.95	0.95	0.95	0.95	0.95	0.95	0.95	0.95	0.95	0.95	0.95
Adj. Flow (vph)	274	28	427	0	0	0	0	784	138	87	717	0
RTOR Reduction (vph)	0	190	0	0	0	0	0	0	58	0	0	0
Lane Group Flow (vph)	0	539	0	0	0	0	0	784	80	87	717	0
Confl. Peds. (#/hr)									5			
Heavy Vehicles (%)	0%	0%	0%	0%	0%	0%	0%	0%	0%	0%	0%	0%
Turn Type	Split								Perm	Prot		
Protected Phases	8	8						6		5	2	
Permitted Phases									6			
Actuated Green, G (s)		19.6						58.3	58.3	8.1	70.4	
Effective Green, g (s)		19.6						58.3	58.3	8.1	70.4	
Actuated g/C Ratio		0.20						0.58	0.58	0.08	0.70	
Clearance Time (s)		5.0						5.0	5.0	4.0	5.0	
Vehicle Extension (s)		2.0						2.0	2.0	2.0	2.0	
Lane Grp Cap (vph)		633						2105	922	146	2541	
v/s Ratio Prot		c0.17						c0.22		c0.05	0.20	
v/s Ratio Perm									0.05			
v/c Ratio		0.85						0.37	0.09	0.60	0.28	
Uniform Delay, d1		38.8						11.1	9.2	44.4	5.5	
Progression Factor		1.00						1.00	1.00	0.85	0.25	
Incremental Delay, d2		10.3						0.5	0.2	3.0	0.2	
Delay (s)		49.1						11.6	9.3	40.7	1.5	
Level of Service		D						B	A	D	A	
Approach Delay (s)		49.1			0.0			11.3			5.8	
Approach LOS		D			A			B			A	

Intersection Summary			
HCM Average Control Delay	20.7	HCM Level of Service	C
HCM Volume to Capacity ratio	0.50		
Actuated Cycle Length (s)	100.0	Sum of lost time (s)	14.0
Intersection Capacity Utilization	78.0%	ICU Level of Service	D
Analysis Period (min)	15		
c Critical Lane Group			

UNIVERISTY CROSSINGS APARTMENTS TRAFFIC IMPACT ANALYSIS (JN 08139)
Existing Plus Ambient Plus Project Plus Cumulative 2014 Conditions
AM PEAK HOUR

Level Of Service Computation Report
2000 HCM Operations Method (Future Volume Alternative)

Intersection #8 Alabama Street / Redlands Boulevard

Cycle (sec): 90 Critical Vol./Cap.(X): 0.642
Loss Time (sec): 8 Average Delay (sec/veh): 33.8
Optimal Cycle: OPTIMIZED Level Of Service: C

Approach:	North Bound			South Bound			East Bound			West Bound		
Movement:	L - T	- R		L - T	- R		L - T	- R		L - T	- R	
Control:	Split Phase			Split Phase			Protected			Protected		
Rights:	Include			Include			Include			Include		
Min. Green:	25	25	25	25	25	25	10	23	23	10	23	23
Y+R:	4.0	4.0	4.0	4.0	4.0	4.0	4.0	4.0	4.0	4.0	4.0	4.0
Lanes:	1 0	1	1 0	1 0	1	1 0	1 0	2	0 1	1 0	2	0 1
Volume Module:												
Base Vol:	69	460	40	84	459	160	106	164	30	43	278	93
Growth Adj:	1.04	1.04	1.04	1.04	1.04	1.04	1.04	1.04	1.04	1.04	1.04	1.04
Initial Bse:	72	479	42	87	478	166	110	171	31	45	289	97
Added Vol:	9	61	12	31	79	20	31	18	5	34	24	37
PasserByVol:	0	0	0	0	0	0	0	0	0	0	0	0
Initial Fut:	81	540	54	118	557	186	141	189	36	79	313	134
User Adj:	1.00	1.00	1.00	1.00	1.00	1.00	1.00	1.00	1.00	1.00	1.00	1.00
PHF Adj:	0.95	0.95	0.95	0.95	0.95	0.95	0.95	0.95	0.95	0.95	0.95	0.95
PHF Volume:	85	568	56	125	586	196	149	199	38	83	330	141
Reduct Vol:	0	0	0	0	0	0	0	0	0	0	0	0
Reduced Vol:	85	568	56	125	586	196	149	199	38	83	330	141
PCE Adj:	1.00	1.00	1.00	1.00	1.00	1.00	1.00	1.00	1.00	1.00	1.00	1.00
MLF Adj:	1.00	1.00	1.00	1.00	1.00	1.00	1.00	1.00	1.00	1.00	1.00	1.00
FinalVolume:	85	568	56	125	586	196	149	199	38	83	330	141
Saturation Flow Module:												
Sat/Lane:	1800	1800	1800	1800	1800	1800	1800	1800	1800	1800	1800	1800
Adjustment:	0.90	0.99	0.99	0.90	0.96	0.96	0.90	1.00	0.85	0.90	1.00	0.85
Lanes:	1.00	1.82	0.18	1.00	1.50	0.50	1.00	2.00	1.00	1.00	2.00	1.00
Final Sat.:	1615	3232	321	1615	2594	869	1615	3600	1530	1615	3600	1530
Capacity Analysis Module:												
Vol/Sat:	0.05	0.18	0.18	0.08	0.23	0.23	0.09	0.06	0.02	0.05	0.09	0.09
Crit Moves:		****			****		****				****	
Green/Cycle:	0.27	0.27	0.27	0.27	0.27	0.27	0.11	0.25	0.25	0.11	0.25	0.25
Volume/Cap:	0.19	0.64	0.64	0.28	0.82	0.82	0.84	0.22	0.10	0.47	0.36	0.36
Delay/Veh:	25.5	30.5	30.5	26.3	36.7	36.7	67.8	27.0	26.2	39.9	28.2	28.6
User DelAdj:	1.00	1.00	1.00	1.00	1.00	1.00	1.00	1.00	1.00	1.00	1.00	1.00
AdjDel/Veh:	25.5	30.5	30.5	26.3	36.7	36.7	67.8	27.0	26.2	39.9	28.2	28.6
LOS by Move:	C	C	C	C	D	D	E	C	C	D	C	C
HCM2kAvgQ:	2	9	9	3	13	13	7	2	1	3	4	3

Note: Queue reported is the number of cars per lane.

Traffix 8.0.0715 (c) 2008 Dowling Assoc. Licensed to URBAN CROSSROADS, IRVINE

UNIVERISTY CROSSINGS APARTMENTS TRAFFIC IMPACT ANALYSIS (JN 08139)
Existing Plus Ambient Plus Project Plus Cumulative 2014 Conditions
PM PEAK HOUR

Level Of Service Computation Report
2000 HCM Operations Method (Future Volume Alternative)

Intersection #1 California Street / Lugonia Avenue

Cycle (sec): 75 Critical Vol./Cap.(X): 0.434
Loss Time (sec): 6 Average Delay (sec/veh): 25.6
Optimal Cycle: OPTIMIZED Level Of Service: C

Approach:	North Bound			South Bound			East Bound			West Bound		
Movement:	L - T - R			L - T - R			L - T - R			L - T - R		
Control:	Permitted			Permitted			Split Phase			Split Phase		
Rights:	Include			Include			Include			Include		
Min. Green:	10	10	10	28	28	28	30	30	30	10	10	10
Y+R:	4.0	4.0	4.0	4.0	4.0	4.0	4.0	4.0	4.0	4.0	4.0	4.0
Lanes:	1 0	1 0	1	1 0	2 0	1	0 1	0 0	1	0 0	1! 0	0
Volume Module:												
Base Vol:	66	240	124	32	464	7	4	44	166	157	38	30
Growth Adj:	1.04	1.04	1.04	1.04	1.04	1.04	1.04	1.04	1.04	1.04	1.04	1.04
Initial Bse:	69	250	129	33	483	7	4	46	173	163	40	31
Added Vol:	4	50	20	6	75	1	0	36	6	14	20	4
PasserByVol:	0	0	0	0	0	0	0	0	0	0	0	0
Initial Fut:	73	300	149	39	558	8	4	82	179	177	60	35
User Adj:	1.00	1.00	1.00	1.00	1.00	1.00	1.00	1.00	1.00	1.00	1.00	1.00
PHF Adj:	0.95	0.95	0.95	0.95	0.95	0.95	0.95	0.95	0.95	0.95	0.95	0.95
PHF Volume:	76	315	157	41	587	9	4	86	188	187	63	37
Reduct Vol:	0	0	0	0	0	0	0	0	0	0	0	0
Reduced Vol:	76	315	157	41	587	9	4	86	188	187	63	37
PCE Adj:	1.00	1.00	1.00	1.00	1.00	1.00	1.00	1.00	1.00	1.00	1.00	1.00
MLF Adj:	1.00	1.00	1.00	1.00	1.00	1.00	1.00	1.00	1.00	1.00	1.00	1.00
FinalVolume:	76	315	157	41	587	9	4	86	188	187	63	37
Saturation Flow Module:												
Sat/Lane:	1800	1800	1800	1800	1800	1800	1800	1800	1800	1800	1800	1800
Adjustment:	0.24	1.00	0.85	0.28	1.00	0.85	0.94	1.00	0.85	0.90	0.95	0.95
Lanes:	1.00	1.00	1.00	1.00	2.00	1.00	0.05	0.95	1.00	0.67	0.21	0.12
Final Sat.:	425	1800	1530	501	3600	1530	87	1705	1530	1075	361	213
Capacity Analysis Module:												
Vol/Sat:	0.18	0.18	0.10	0.08	0.16	0.01	0.05	0.05	0.12	0.17	0.17	0.17
Crit Moves:		****					****					****
Green/Cycle:	0.26	0.26	0.26	0.26	0.26	0.26	0.40	0.40	0.40	0.26	0.26	0.26
Volume/Cap:	0.69	0.67	0.39	0.32	0.62	0.02	0.13	0.13	0.31	0.67	0.67	0.67
Delay/Veh:	41.7	28.6	23.4	23.7	25.8	20.6	14.3	14.3	15.7	29.1	29.1	29.1
User DelAdj:	1.00	1.00	1.00	1.00	1.00	1.00	1.00	1.00	1.00	1.00	1.00	1.00
AdjDel/Veh:	41.7	28.6	23.4	23.7	25.8	20.6	14.3	14.3	15.7	29.1	29.1	29.1
LOS by Move:	D	C	C	C	C	C	B	B	B	C	C	C
HCM2kAvgQ:	3	8	3	1	7	0	1	1	3	7	7	7

Note: Queue reported is the number of cars per lane.

Traffix 8.0.0715 (c) 2008 Dowling Assoc. Licensed to URBAN CROSSROADS, IRVINE

UNIVERISTY CROSSINGS APARTMENTS TRAFFIC IMPACT ANALYSIS (JN 08139)
Existing Plus Ambient Plus Project Plus Cumulative 2014 Conditions
PM PEAK HOUR

Level Of Service Computation Report
2000 HCM 4-Way Stop Method (Future Volume Alternative)

Intersection #2 Nevada Street / Lugonia Avenue

Cycle (sec):	0	Critical Vol./Cap.(X):	0.941
Loss Time (sec):	0	Average Delay (sec/veh):	31.4
Optimal Cycle:	0	Level Of Service:	D

Approach:	North Bound						South Bound						East Bound						West Bound					
Movement:	L	-	T	-	R		L	-	T	-	R		L	-	T	-	R		L	-	T	-	R	
Control:	Stop Sign						Stop Sign						Stop Sign						Stop Sign					
Rights:	Include						Include						Include						Include					
Min. Green:	0		0		0		0		0		0		0		0		0		0		0		0	
Lanes:	0	1	0	0	1		0	0	1!	0	0		0	1	0	0	1		0	0	1!	0	0	
Volume Module:																								
Base Vol:	18	167		167			21	132		5			23	191		47			119	155		9		
Growth Adj:	1.04	1.04		1.04			1.04	1.04		1.04			1.04	1.04		1.04			1.04	1.04		1.04		
Initial Bse:	19	174		174			22	137		5			24	199		49			124	161		9		
Added Vol:	5	7		40			20	13		0			0	59		3			21	32		12		
PasserByVol:	0	0		0			0	0		0			0	0		0			0	0		0		
Initial Fut:	24	181		214			42	150		5			24	258		52			145	193		21		
User Adj:	1.00	1.00		1.00			1.00	1.00		1.00			1.00	1.00		1.00			1.00	1.00		1.00		
PHF Adj:	0.85	0.85		0.85			0.85	0.85		0.85			0.85	0.85		0.85			0.85	0.85		0.85		
PHF Volume:	28	214		253			49	178		6			28	305		61			171	228		25		
Reduct Vol:	0	0		0			0	0		0			0	0		0			0	0		0		
Reduced Vol:	28	214		253			49	178		6			28	305		61			171	228		25		
PCE Adj:	1.00	1.00		1.00			1.00	1.00		1.00			1.00	1.00		1.00			1.00	1.00		1.00		
MLF Adj:	1.00	1.00		1.00			1.00	1.00		1.00			1.00	1.00		1.00			1.00	1.00		1.00		
FinalVolume:	28	214		253			49	178		6			28	305		61			171	228		25		
Saturation Flow Module:																								
Adjustment:	1.00	1.00		1.00			1.00	1.00		1.00			1.00	1.00		1.00			1.00	1.00		1.00		
Lanes:	0.12	0.88		1.00			0.21	0.76		0.03			0.08	0.92		1.00			0.40	0.54		0.06		
Final Sat.:	50	382		475			84	302		10			37	401		482			182	243		27		
Capacity Analysis Module:																								
Vol/Sat:	0.56	0.56		0.53			0.59	0.59		0.59			0.76	0.76		0.13			0.94	0.94		0.94		
Crit Moves:		****						****						****					****					
Delay/Veh:	19.9	19.9		17.5			22.1	22.1		22.1			29.9	29.9		10.9			55.3	55.3		55.3		
Delay Adj:	1.00	1.00		1.00			1.00	1.00		1.00			1.00	1.00		1.00			1.00	1.00		1.00		
AdjDel/Veh:	19.9	19.9		17.5			22.1	22.1		22.1			29.9	29.9		10.9			55.3	55.3		55.3		
LOS by Move:	C	C		C			C	C		C			D	D		B			F	F		F		
ApproachDel:		18.7						22.1						27.0						55.3				
Delay Adj:		1.00						1.00						1.00						1.00				
ApprAdjDel:		18.7						22.1						27.0						55.3				
LOS by Appr:		C						C						D						F				
AllWayAvgQ:	1.1	1.1		1.0			1.2	1.2		1.2			2.3	2.3		0.1			5.6	5.6		5.6		

Note: Queue reported is the number of cars per lane.

Traffix 8.0.0715 (c) 2008 Dowling Assoc. Licensed to URBAN CROSSROADS, IRVINE

```
-------------------------------------------------------------------------------
      UNIVERISTY CROSSINGS APARTMENTS TRAFFIC IMPACT ANALYSIS (JN 08139)
      Existing Plus Ambient Plus Project Plus Cumulative 2014 Conditions
                                PM PEAK HOUR
-------------------------------------------------------------------------------
                      Level Of Service Computation Report
           2000 HCM Unsignalized Method (Future Volume Alternative)
*******************************************************************************
Intersection #3 Driveway 1 / Lugonia Avenue
*******************************************************************************
Average Delay (sec/veh):      0.1       Worst Case Level Of Service: A[  9.2]
*******************************************************************************
Approach:      North Bound      South Bound       East Bound       West Bound
Movement:     L  -  T  -  R    L  -  T  -  R    L  -  T  -  R    L  -  T  -  R
------------|---------------||---------------||---------------||---------------|
Control:        Stop Sign        Stop Sign       Uncontrolled     Uncontrolled
Rights:           Include          Include          Include          Include
Lanes:        0  0  0  0  0    0  0  0  0  1    0  0  1  0  0    0  0  1  1  0
------------|---------------||---------------||---------------||---------------|
Volume Module:
Base Vol:       0    0     0     0    0     0     0  379     0     0  283     0
Growth Adj:  1.04 1.04  1.04  1.04 1.04  1.04  1.04 1.04  1.04  1.04 1.04  1.04
Initial Bse:    0    0     0     0    0     0     0  394     0     0  294     0
Added Vol:      0    0     0     0    0     7     0  136     0     0   57    13
PasserByVol:    0    0     0     0    0     0     0    0     0     0    0     0
Initial Fut:    0    0     0     0    0     7     0  530     0     0  351    13
User Adj:    1.00 1.00  1.00  1.00 1.00  1.00  1.00 1.00  1.00  1.00 1.00  1.00
PHF Adj:     0.95 0.95  0.95  0.95 0.95  0.95  0.95 0.95  0.95  0.95 0.95  0.95
PHF Volume:     0    0     0     0    0     7     0  558     0     0  370    14
Reduct Vol:     0    0     0     0    0     0     0    0     0     0    0     0
FinalVolume:    0    0     0     0    0     7     0  558     0     0  370    14
------------|---------------||---------------||---------------||---------------|
Critical Gap Module:
Critical Gp:xxxxx xxxx xxxxx xxxxx xxxx   6.2 xxxxx xxxx xxxxx xxxxx xxxx xxxxx
FollowUpTim:xxxxx xxxx xxxxx xxxxx xxxx   3.3 xxxxx xxxx xxxxx xxxxx xxxx xxxxx
------------|---------------||---------------||---------------||---------------|
Capacity Module:
Cnflict Vol: xxxx xxxx xxxxx  xxxx xxxx   192  xxxx xxxx xxxxx  xxxx xxxx xxxxx
Potent Cap.: xxxx xxxx xxxxx  xxxx xxxx   855  xxxx xxxx xxxxx  xxxx xxxx xxxxx
Move Cap.:   xxxx xxxx xxxxx  xxxx xxxx   855  xxxx xxxx xxxxx  xxxx xxxx xxxxx
Volume/Cap:  xxxx xxxx  xxxx  xxxx xxxx  0.01  xxxx xxxx  xxxx  xxxx xxxx  xxxx
------------|---------------||---------------||---------------||---------------|
Level Of Service Module:
2Way95thQ:   xxxx xxxx xxxxx  xxxx xxxx   0.0  xxxx xxxx xxxxx  xxxx xxxx xxxxx
Control Del:xxxxx xxxx xxxxx xxxxx xxxx   9.2 xxxxx xxxx xxxxx xxxxx xxxx xxxxx
LOS by Move:    *    *     *     *    *     A     *    *     *     *    *     *
Movement:     LT - LTR - RT    LT - LTR - RT    LT - LTR - RT    LT - LTR - RT
Shared Cap.: xxxx xxxx xxxxx  xxxx xxxx xxxxx  xxxx xxxx xxxxx  xxxx xxxx xxxxx
SharedQueue:xxxxx xxxx xxxxx xxxxx xxxx xxxxx xxxxx xxxx xxxxx xxxxx xxxx xxxxx
Shrd ConDel:xxxxx xxxx xxxxx xxxxx xxxx xxxxx xxxxx xxxx xxxxx xxxxx xxxx xxxxx
Shared LOS:     *    *     *     *    *     *     *    *     *     *    *     *
ApproachDel:    xxxxxx              9.2           xxxxxx           xxxxxx
ApproachLOS:         *                A                *                *
*******************************************************************************
Note: Queue reported is the number of cars per lane.
*******************************************************************************


  Traffix 8.0.0715 (c) 2008 Dowling Assoc. Licensed to URBAN CROSSROADS, IRVINE
```

UNIVERISTY CROSSINGS APARTMENTS TRAFFIC IMPACT ANALYSIS (JN 08139)
Existing Plus Ambient Plus Project Plus Cumulative 2014 Conditions
PM PEAK HOUR

Level Of Service Computation Report
2000 HCM Unsignalized Method (Future Volume Alternative)

Intersection #4 Driveway 2 / Lugonia Avenue

Average Delay (sec/veh): 1.6 Worst Case Level Of Service: C[16.9]

Approach:	North Bound					South Bound					East Bound					West Bound				
Movement:	L	-	T	-	R	L	-	T	-	R	L	-	T	-	R	L	-	T	-	R
Control:	Stop Sign					Stop Sign					Uncontrolled					Uncontrolled				
Rights:	Include					Include					Include					Include				
Lanes:	0	0	0	0	0	0	0	1!	0	0	1	0	1	0	0	0	0	1	1	0
Volume Module:																				
Base Vol:	0	0	0	0	0	0	0	0	0	0	0	379	0	0	0	0	283	0		
Growth Adj:	1.04	1.04	1.04	1.04	1.04	1.04	1.04	1.04	1.04	1.04	1.04	1.04	1.04	1.04	1.04	1.04	1.04	1.04		
Initial Bse:	0	0	0	0	0	0	0	0	0	0	0	394	0	0	0	0	294	0		
Added Vol:	0	0	0	36	0	28	64	72	0	0	41	51								
PasserByVol:	0	0	0	0	0	0	0	0	0	0	0	0								
Initial Fut:	0	0	0	36	0	28	64	466	0	0	335	51								
User Adj:	1.00	1.00	1.00	1.00	1.00	1.00	1.00	1.00	1.00	1.00	1.00	1.00								
PHF Adj:	0.95	0.95	0.95	0.95	0.95	0.95	0.95	0.95	0.95	0.95	0.95	0.95								
PHF Volume:	0	0	0	38	0	29	67	491	0	0	353	54								
Reduct Vol:	0	0	0	0	0	0	0	0	0	0	0	0								
FinalVolume:	0	0	0	38	0	29	67	491	0	0	353	54								
Critical Gap Module:																				
Critical Gp:	xxxxx	xxxx	xxxxx	6.4	6.5	6.2	4.1	xxxx	xxxxx	xxxxx	xxxx	xxxxx								
FollowUpTim:	xxxxx	xxxx	xxxxx	3.5	4.0	3.3	2.2	xxxx	xxxxx	xxxxx	xxxx	xxxxx								
Capacity Module:																				
Cnflict Vol:	xxxx	xxxx	xxxxx	1006	1006	203	407	xxxx	xxxxx	xxxx	xxxx	xxxxx								
Potent Cap.:	xxxx	xxxx	xxxxx	270	243	842	1163	xxxx	xxxxx	xxxx	xxxx	xxxxx								
Move Cap.:	xxxx	xxxx	xxxxx	258	229	842	1163	xxxx	xxxxx	xxxx	xxxx	xxxxx								
Volume/Cap:	xxxx	xxxx	xxxx	0.15	0.00	0.03	0.06	xxxx	xxxx	xxxx	xxxx	xxxx								
Level Of Service Module:																				
2Way95thQ:	xxxx	xxxx	xxxxx	xxxx	xxxx	xxxxx	0.2	xxxx	xxxxx	xxxx	xxxx	xxxxx								
Control Del:	xxxxx	xxxx	xxxxx	xxxxx	xxxx	xxxxx	8.3	xxxx	xxxxx	xxxxx	xxxx	xxxxx								
LOS by Move:	*	*	*	*	*	*	A	*	*	*	*	*								
Movement:	LT	-	LTR	-	RT	LT	-	LTR	-	RT	LT	-	LTR	-	RT	LT	-	LTR	-	RT
Shared Cap.:	xxxx	xxxx	xxxxx	xxxx	370	xxxxx	xxxx	xxxx	xxxxx	xxxx	xxxx	xxxxx								
SharedQueue:	xxxxx	xxxx	xxxxx	xxxxx	0.7	xxxxx	xxxxx	xxxx	xxxxx	xxxxx	xxxx	xxxxx								
Shrd ConDel:	xxxxx	xxxx	xxxxx	xxxxx	16.9	xxxxx	xxxxx	xxxx	xxxxx	xxxxx	xxxx	xxxxx								
Shared LOS:	*	*	*	*	C	*	*	*	*	*	*	*								
ApproachDel:	xxxxxx				16.9		xxxxxx				xxxxxx									
ApproachLOS:	*				C		*				*									

Note: Queue reported is the number of cars per lane.

Traffix 8.0.0715 (c) 2008 Dowling Assoc. Licensed to URBAN CROSSROADS, IRVINE

UNIVERISTY CROSSINGS APARTMENTS TRAFFIC IMPACT ANALYSIS (JN 08139)
Existing Plus Ambient Plus Project Plus Cumulative 2014 Conditions
PM PEAK HOUR

Level Of Service Computation Report
2000 HCM Operations Method (Future Volume Alternative)

Intersection #5 Alabama Street / Lugonia Avenue

Cycle (sec): 105 Critical Vol./Cap.(X): 0.848
Loss Time (sec): 8 Average Delay (sec/veh): 44.9
Optimal Cycle: OPTIMIZED Level Of Service: D

Approach:	North Bound			South Bound			East Bound			West Bound		
Movement:	L - T - R			L - T - R			L - T - R			L - T - R		
Control:	Protected			Protected			Protected			Protected		
Rights:	Include			Include			Include			Include		
Min. Green:	10	20	20	10	20	20	10	24	24	10	24	24
Y+R:	4.0	4.0	4.0	4.0	4.0	4.0	4.0	4.0	4.0	4.0	4.0	4.0
Lanes:	1 0	2 0	1	1 0	3 0	1	1 0	1 1	0	1 0	2 0	1
Volume Module:												
Base Vol:	116	593	370	134	475	21	130	309	70	342	263	42
Growth Adj:	1.04	1.04	1.04	1.04	1.04	1.04	1.04	1.04	1.04	1.04	1.04	1.04
Initial Bse:	121	617	385	139	494	22	135	321	73	356	274	44
Added Vol:	36	302	23	70	345	21	15	40	37	16	30	59
PasserByVol:	0	0	0	0	0	0	0	0	0	0	0	0
Initial Fut:	157	919	408	209	839	43	150	361	110	372	304	103
User Adj:	1.00	1.00	1.00	1.00	1.00	1.00	1.00	1.00	1.00	1.00	1.00	1.00
PHF Adj:	0.97	0.97	0.97	0.97	0.97	0.97	0.97	0.97	0.97	0.97	0.97	0.97
PHF Volume:	161	944	419	215	862	44	154	372	113	382	312	106
Reduct Vol:	0	0	0	0	0	0	0	0	0	0	0	0
Reduced Vol:	161	944	419	215	862	44	154	372	113	382	312	106
PCE Adj:	1.00	1.00	1.00	1.00	1.00	1.00	1.00	1.00	1.00	1.00	1.00	1.00
MLF Adj:	1.00	1.00	1.00	1.00	1.00	1.00	1.00	1.00	1.00	1.00	1.00	1.00
FinalVolume:	161	944	419	215	862	44	154	372	113	382	312	106
Saturation Flow Module:												
Sat/Lane:	1800	1800	1800	1800	1800	1800	1800	1800	1800	1800	1800	1800
Adjustment:	0.90	1.00	0.85	0.90	1.00	0.85	0.90	0.97	0.97	0.90	1.00	0.85
Lanes:	1.00	2.00	1.00	1.00	3.00	1.00	1.00	1.53	0.47	1.00	2.00	1.00
Final Sat.:	1615	3600	1530	1615	5400	1530	1615	2664	810	1615	3600	1530
Capacity Analysis Module:												
Vol/Sat:	0.10	0.26	0.27	0.13	0.16	0.03	0.10	0.14	0.14	0.24	0.09	0.07
Crit Moves:			****	****				****		****		
Green/Cycle:	0.15	0.30	0.30	0.14	0.29	0.29	0.14	0.23	0.23	0.26	0.34	0.34
Volume/Cap:	0.66	0.89	0.93	0.93	0.55	0.10	0.67	0.61	0.61	0.93	0.25	0.20
Delay/Veh:	48.6	44.5	60.9	83.7	32.1	27.5	50.1	37.7	37.7	64.9	25.1	24.7
User DelAdj:	1.00	1.00	1.00	1.00	1.00	1.00	1.00	1.00	1.00	1.00	1.00	1.00
AdjDel/Veh:	48.6	44.5	60.9	83.7	32.1	27.5	50.1	37.7	37.7	64.9	25.1	24.7
LOS by Move:	D	D	E	F	C	C	D	D	D	E	C	C
HCM2kAvgQ:	6	18	17	11	8	1	6	8	8	17	4	2

Note: Queue reported is the number of cars per lane.

Traffix 8.0.0715 (c) 2008 Dowling Assoc. Licensed to URBAN CROSSROADS, IRVINE

Movement	EBL	EBT	EBR	WBL	WBT	WBR	NBL	NBT	NBR	SBL	SBT	SBR
Lane Configurations												
Volume (vph)	0	0	0	175	374	229	415	1442	0	0	1126	385
Ideal Flow (vphpl)	1900	1900	1900	1900	1900	1900	1900	1900	1900	1900	1900	1900
Total Lost time (s)					5.0		4.0	5.0			5.0	
Lane Util. Factor					0.95		1.00	0.95			0.95	
Frpb, ped/bikes					0.99		1.00	1.00			1.00	
Flpb, ped/bikes					1.00		1.00	1.00			1.00	
Frt					0.96		1.00	1.00			0.96	
Flt Protected					0.99		0.95	1.00			1.00	
Satd. Flow (prot)					3394		1805	3610			3472	
Flt Permitted					0.99		0.95	1.00			1.00	
Satd. Flow (perm)					3394		1805	3610			3472	
Peak-hour factor, PHF	0.97	0.97	0.97	0.97	0.97	0.97	0.97	0.97	0.97	0.97	0.97	0.97
Adj. Flow (vph)	0	0	0	180	386	236	428	1487	0	0	1161	397
RTOR Reduction (vph)	0	0	0	0	43	0	0	0	0	0	33	0
Lane Group Flow (vph)	0	0	0	0	759	0	428	1487	0	0	1525	0
Confl. Peds. (#/hr)						5						
Heavy Vehicles (%)	0%	0%	0%	0%	0%	0%	0%	0%	0%	0%	0%	0%
Turn Type				Split			Prot					
Protected Phases				4	4		1	6			2	
Permitted Phases												
Actuated Green, G (s)					23.0		26.0	67.0			37.0	
Effective Green, g (s)					23.0		26.0	67.0			37.0	
Actuated g/C Ratio					0.23		0.26	0.67			0.37	
Clearance Time (s)					5.0		4.0	5.0			5.0	
Vehicle Extension (s)					2.0		2.0	2.0			2.0	
Lane Grp Cap (vph)					781		469	2419			1285	
v/s Ratio Prot					c0.22		c0.24	0.41			c0.44	
v/s Ratio Perm												
v/c Ratio					0.97		0.91	0.61			1.19	
Uniform Delay, d1					38.2		35.9	9.3			31.5	
Progression Factor					1.00		0.81	1.82			1.00	
Incremental Delay, d2					25.2		10.4	0.5			92.2	
Delay (s)					63.3		39.4	17.3			123.7	
Level of Service					E		D	B			F	
Approach Delay (s)		0.0			63.3			22.2			123.7	
Approach LOS		A			E			C			F	

Intersection Summary			
HCM Average Control Delay	66.9	HCM Level of Service	E
HCM Volume to Capacity ratio	1.05		
Actuated Cycle Length (s)	100.0	Sum of lost time (s)	14.0
Intersection Capacity Utilization	101.0%	ICU Level of Service	G
Analysis Period (min)	15		
c Critical Lane Group			

Movement	EBL	EBT	EBR	WBL	WBT	WBR	NBL	NBT	NBR	SBL	SBT	SBR
Lane Configurations												
Volume (vph)	523	42	449	0	0	0	0	1334	290	285	1018	0
Ideal Flow (vphpl)	1900	1900	1900	1900	1900	1900	1900	1900	1900	1900	1900	1900
Total Lost time (s)		5.0						5.0	5.0	4.0	5.0	
Lane Util. Factor		0.95						0.95	1.00	1.00	0.95	
Frpb, ped/bikes		1.00						1.00	0.98	1.00	1.00	
Flpb, ped/bikes		1.00						1.00	1.00	1.00	1.00	
Frt		0.93						1.00	0.85	1.00	1.00	
Flt Protected		0.97						1.00	1.00	0.95	1.00	
Satd. Flow (prot)		3285						3610	1581	1805	3610	
Flt Permitted		0.97						1.00	1.00	0.95	1.00	
Satd. Flow (perm)		3285						3610	1581	1805	3610	
Peak-hour factor, PHF	0.99	0.99	0.99	0.99	0.99	0.99	0.99	0.99	0.99	0.99	0.99	0.99
Adj. Flow (vph)	528	42	454	0	0	0	0	1347	293	288	1028	0
RTOR Reduction (vph)	0	84	0	0	0	0	0	0	163	0	0	0
Lane Group Flow (vph)	0	940	0	0	0	0	0	1347	130	288	1028	0
Confl. Peds. (#/hr)									5			
Heavy Vehicles (%)	0%	0%	0%	0%	0%	0%	0%	0%	0%	0%	0%	0%
Turn Type	Split								Perm	Prot		
Protected Phases	8	8						6		5	2	
Permitted Phases									6			
Actuated Green, G (s)		28.4						41.0	41.0	16.6	61.6	
Effective Green, g (s)		28.4						41.0	41.0	16.6	61.6	
Actuated g/C Ratio		0.28						0.41	0.41	0.17	0.62	
Clearance Time (s)		5.0						5.0	5.0	4.0	5.0	
Vehicle Extension (s)		2.0						2.0	2.0	2.0	2.0	
Lane Grp Cap (vph)		933						1480	648	300	2224	
v/s Ratio Prot		c0.29						c0.37		c0.16	0.28	
v/s Ratio Perm									0.08			
v/c Ratio		1.01						0.91	0.20	0.96	0.46	
Uniform Delay, d1		35.8						27.8	19.0	41.4	10.3	
Progression Factor		1.00						1.00	1.00	0.74	0.50	
Incremental Delay, d2		31.2						9.9	0.7	8.1	0.1	
Delay (s)		67.0						37.7	19.7	38.8	5.2	
Level of Service		E						D	B	D	A	
Approach Delay (s)		67.0			0.0			34.4			12.6	
Approach LOS		E			A			C			B	

Intersection Summary			
HCM Average Control Delay	35.6	HCM Level of Service	D
HCM Volume to Capacity ratio	0.95		
Actuated Cycle Length (s)	100.0	Sum of lost time (s)	14.0
Intersection Capacity Utilization	101.0%	ICU Level of Service	G
Analysis Period (min)	15		
c Critical Lane Group			

UNIVERISTY CROSSINGS APARTMENTS TRAFFIC IMPACT ANALYSIS (JN 08139)
Existing Plus Ambient Plus Project Plus Cumulative 2014 Conditions
PM PEAK HOUR

Level Of Service Computation Report
2000 HCM Operations Method (Future Volume Alternative)

Intersection #8 Alabama Street / Redlands Boulevard

Cycle (sec): 115 Critical Vol./Cap.(X): 0.956
Loss Time (sec): 8 Average Delay (sec/veh): 58.8
Optimal Cycle: OPTIMIZED Level Of Service: E

Approach:	North Bound			South Bound			East Bound			West Bound		
Movement:	L - T	- R		L - T	- R		L - T	- R		L - T	- R	
Control:	Split Phase			Split Phase			Protected			Protected		
Rights:	Include			Include			Include			Include		
Min. Green:	25	25	25	25	25	25	10	23	23	10	23	23
Y+R:	4.0	4.0	4.0	4.0	4.0	4.0	4.0	4.0	4.0	4.0	4.0	4.0
Lanes:	1 0	1	1 0	1 0	1	1 0	1 0	2	0 1	1 0	2	0 1
Volume Module:												
Base Vol:	67	525	77	127	537	104	273	530	78	86	347	153
Growth Adj:	1.04	1.04	1.04	1.04	1.04	1.04	1.04	1.04	1.04	1.04	1.04	1.04
Initial Bse:	70	546	80	132	559	108	284	551	81	89	361	159
Added Vol:	7	140	45	94	117	67	58	35	10	20	29	84
PasserByVol:	0	0	0	0	0	0	0	0	0	0	0	0
Initial Fut:	77	686	125	226	676	175	342	586	91	109	390	243
User Adj:	1.00	1.00	1.00	1.00	1.00	1.00	1.00	1.00	1.00	1.00	1.00	1.00
PHF Adj:	0.95	0.95	0.95	0.95	0.95	0.95	0.95	0.95	0.95	0.95	0.95	0.95
PHF Volume:	81	722	132	238	711	184	360	617	96	115	411	256
Reduct Vol:	0	0	0	0	0	0	0	0	0	0	0	0
Reduced Vol:	81	722	132	238	711	184	360	617	96	115	411	256
PCE Adj:	1.00	1.00	1.00	1.00	1.00	1.00	1.00	1.00	1.00	1.00	1.00	1.00
MLF Adj:	1.00	1.00	1.00	1.00	1.00	1.00	1.00	1.00	1.00	1.00	1.00	1.00
FinalVolume:	81	722	132	238	711	184	360	617	96	115	411	256
Saturation Flow Module:												
Sat/Lane:	1800	1800	1800	1800	1800	1800	1800	1800	1800	1800	1800	1800
Adjustment:	0.90	0.98	0.98	0.90	0.97	0.97	0.90	1.00	0.85	0.90	1.00	0.85
Lanes:	1.00	1.69	0.31	1.00	1.59	0.41	1.00	2.00	1.00	1.00	2.00	1.00
Final Sat.:	1615	2975	542	1615	2770	718	1615	3600	1530	1615	3600	1530
Capacity Analysis Module:												
Vol/Sat:	0.05	0.24	0.24	0.15	0.26	0.26	0.22	0.17	0.06	0.07	0.11	0.17
Crit Moves:			****			****	****					****
Green/Cycle:	0.25	0.25	0.25	0.26	0.26	0.26	0.23	0.30	0.30	0.13	0.20	0.20
Volume/Cap:	0.20	0.99	0.99	0.57	0.99	0.99	0.99	0.58	0.21	0.55	0.57	0.84
Delay/Veh:	34.7	71.1	71.1	38.8	69.6	69.6	88.5	35.1	30.6	50.2	42.6	62.1
User DelAdj:	1.00	1.00	1.00	1.00	1.00	1.00	1.00	1.00	1.00	1.00	1.00	1.00
AdjDel/Veh:	34.7	71.1	71.1	38.8	69.6	69.6	88.5	35.1	30.6	50.2	42.6	62.1
LOS by Move:	C	E	E	D	E	E	F	D	C	D	D	E
HCM2kAvgQ:	2	21	21	8	21	21	19	10	3	5	7	11

Note: Queue reported is the number of cars per lane.

Traffix 8.0.0715 (c) 2008 Dowling Assoc. Licensed to URBAN CROSSROADS, IRVINE

APPENDIX 6.2

Existing Plus Ambient Growth Plus Project Plus Cumulative (2014)Conditions
Traffic Signal Warrant Analysis Worksheets

Figure 4C-103 (CA). Traffic Signal Warrants Worksheet
(Average Traffic Estimate Form)

DIST	CO	RTE	PM		TRAFFIC CONDITIONS		EAPC (2014)
				CALC	CH	DATE	02/24/12
Jurisdiction:	County of San Bernardino			CHK	CH	DATE	02/24/12
Major Street:	Lugonia Avenue				Critical Approach Speed (Major)		45
Minor Street:	Driveway 2				Critical Approach Speed (Minor)		25

Major Street Approach Lanes = **2** Minor Street Approach Lanes **1**

Major Street Future ADT = **11,650** Minor Street Future ADT = **950**

Speed limit or critical speed on major street traffic > 64 km/h (40 mph); ……... [√]

or **RURAL (R)**

In built up area of isolated community of < 10,000 population …….. [ ]

(Based on Estimated Average Daily Traffic - See Note)

URBAN	RURAL	Minimum Requirements EADT			
	XX				
CONDITION A - Minimum Vehicular Volume					
Satisfied	Not Satisfied				
	XX				
Number of lanes for moving traffic on each approach		Vehicles Per Day on Major Street (Total of Both Approaches)		Vehicles Per Day on Higher-Volume Minor Street Approach (One Direction Only)	
Major Street	Minor Street	Urban	Rural	Urban	Rural
1	*1*	8,000	5,600	2,400	1,680
2 + **11,650**	*1* **950**	9,600	6,720 *	2,400	1,680
2 +	*2 +*	9,600	6,720	3,200	2,240
1	*2 +*	8,000	5,600	3,200	2,240
CONDITION B - Interruption of Continuous Traffic					
Satisfied	Not Satisfied				
	XX				
Number of lanes for moving traffic on each approach		Vehicles Per Day on Major Street (Total of Both Approaches)		Vehicles Per Day on Higher-Volume Minor Street Approach (One Direction Only)	
Major Street	Minor Street	Urban	Rural	Urban	Rural
1	*1*	12,000	8,400	1,200	850
2 +	*1* **950**	14,400	10,080	1,200	850 *
2 +	*2 +*	14,400	10,080	1,600	1,120
1	*2 +*	12,000	8,400	1,600	1,120
Combination of CONDITIONS A + B					
Satisfied	Not Satisfied				
	XX	2 CONDITIONS 80%		2 CONDITIONS 80%	
No one condition satisfied, but following conditions fulfilled 80% of more …..	**A** 57% / **B** 100%				

Note: To be used only for NEW INTERSECTIONS or other locations where it is not reasonable to count actual traffic volumes.

The satisfaction of a traffic signal warrant or warrants shall not in itself require the installation of a traffic control signal.

This Page Intentionally Left Blank

APPENDIX 6.3

Existing Plus Ambient Growth Plus Project Plus Cumulative (2014) Conditions
Intersection Operations Analysis Worksheets, with Improvements

UNIVERISTY CROSSINGS APARTMENTS TRAFFIC IMPACT ANALYSIS (JN 08139)
Existing Plus Ambient Plus Project Plus Cumulative 2014 Conditions
AM PEAK HOUR

Level Of Service Computation Report
2000 HCM Operations Method (Future Volume Alternative)

Intersection #8 Alabama Street / Redlands Boulevard

Cycle (sec): 75 Critical Vol./Cap.(X): 0.468
Loss Time (sec): 8 Average Delay (sec/veh): 23.7
Optimal Cycle: OPTIMIZED Level Of Service: C

Approach:	North Bound			South Bound			East Bound			West Bound		
Movement:	L - T	- R		L - T	- R		L - T	- R		L - T	- R	
Control:	Protected			Protected			Protected			Protected		
Rights:	Include			Include			Include			Include		
Min. Green:	10	25	25	10	25	25	10	23	23	10	23	23
Y+R:	4.0	4.0	4.0	4.0	4.0	4.0	4.0	4.0	4.0	4.0	4.0	4.0
Lanes:	1 0	1	1 0	1 0	1	1 0	2 0	2	0 1	1 0	2	0 1
Volume Module:												
Base Vol:	69	460	40	84	459	160	106	164	30	43	278	93
Growth Adj:	1.04	1.04	1.04	1.04	1.04	1.04	1.04	1.04	1.04	1.04	1.04	1.04
Initial Bse:	72	479	42	87	478	166	110	171	31	45	289	97
Added Vol:	9	61	12	31	79	20	31	18	5	34	24	37
PasserByVol:	0	0	0	0	0	0	0	0	0	0	0	0
Initial Fut:	81	540	54	118	557	186	141	189	36	79	313	134
User Adj:	1.00	1.00	1.00	1.00	1.00	1.00	1.00	1.00	1.00	1.00	1.00	1.00
PHF Adj:	0.95	0.95	0.95	0.95	0.95	0.95	0.95	0.95	0.95	0.95	0.95	0.95
PHF Volume:	85	568	56	125	586	196	149	199	38	83	330	141
Reduct Vol:	0	0	0	0	0	0	0	0	0	0	0	0
Reduced Vol:	85	568	56	125	586	196	149	199	38	83	330	141
PCE Adj:	1.00	1.00	1.00	1.00	1.00	1.00	1.00	1.00	1.00	1.00	1.00	1.00
MLF Adj:	1.00	1.00	1.00	1.00	1.00	1.00	1.00	1.00	1.00	1.00	1.00	1.00
FinalVolume:	85	568	56	125	586	196	149	199	38	83	330	141
Saturation Flow Module:												
Sat/Lane:	1800	1800	1800	1800	1800	1800	1800	1800	1800	1800	1800	1800
Adjustment:	0.90	0.99	0.99	0.90	0.96	0.96	0.84	1.00	0.85	0.90	1.00	0.85
Lanes:	1.00	1.82	0.18	1.00	1.50	0.50	2.00	2.00	1.00	1.00	2.00	1.00
Final Sat.:	1615	3232	321	1615	2594	869	3040	3600	1530	1615	3600	1530
Capacity Analysis Module:												
Vol/Sat:	0.05	0.18	0.18	0.08	0.23	0.23	0.05	0.06	0.02	0.05	0.09	0.09
Crit Moves:	****				****		****				****	
Green/Cycle:	0.13	0.33	0.33	0.13	0.33	0.33	0.13	0.30	0.30	0.13	0.30	0.30
Volume/Cap:	0.40	0.53	0.53	0.59	0.69	0.69	0.37	0.18	0.08	0.39	0.30	0.30
Delay/Veh:	31.5	21.2	21.2	35.3	23.9	23.9	30.7	19.6	19.0	31.4	20.5	20.7
User DelAdj:	1.00	1.00	1.00	1.00	1.00	1.00	1.00	1.00	1.00	1.00	1.00	1.00
AdjDel/Veh:	31.5	21.2	21.2	35.3	23.9	23.9	30.7	19.6	19.0	31.4	20.5	20.7
LOS by Move:	C	C	C	D	C	C	C	B	B	C	C	C
HCM2kAvgQ:	2	6	6	4	9	9	2	2	1	2	3	3

Note: Queue reported is the number of cars per lane.

Traffix 8.0.0715 (c) 2008 Dowling Assoc. Licensed to URBAN CROSSROADS, IRVINE

Movement	EBL	EBT	EBR	WBL	WBT	WBR	NBL	NBT	NBR	SBL	SBT	SBR
Lane Configurations												
Volume (vph)	0	0	0	262	326	310	367	637	0	0	484	183
Ideal Flow (vphpl)	1900	1900	1900	1900	1900	1900	1900	1900	1900	1900	1900	1900
Total Lost time (s)					5.0		4.0	5.0			5.0	5.0
Lane Util. Factor					0.95		1.00	0.95			0.95	1.00
Frpb, ped/bikes					0.99		1.00	1.00			1.00	1.00
Flpb, ped/bikes					1.00		1.00	1.00			1.00	1.00
Frt					0.95		1.00	1.00			1.00	0.85
Flt Protected					0.99		0.95	1.00			1.00	1.00
Satd. Flow (prot)					3354		1805	3610			3610	1615
Flt Permitted					0.99		0.95	1.00			1.00	1.00
Satd. Flow (perm)					3354		1805	3610			3610	1615
Peak-hour factor, PHF	0.95	0.95	0.95	0.95	0.95	0.95	0.95	0.95	0.95	0.95	0.95	0.95
Adj. Flow (vph)	0	0	0	276	343	326	386	671	0	0	509	193
RTOR Reduction (vph)	0	0	0	0	61	0	0	0	0	0	0	129
Lane Group Flow (vph)	0	0	0	0	884	0	386	671	0	0	509	64
Confl. Peds. (#/hr)						5						
Heavy Vehicles (%)	0%	0%	0%	0%	0%	0%	0%	0%	0%	0%	0%	0%
Turn Type				Split			Prot					Perm
Protected Phases				4	4		1	6			2	
Permitted Phases												2
Actuated Green, G (s)					36.2		30.0	73.8			39.8	39.8
Effective Green, g (s)					36.2		30.0	73.8			39.8	39.8
Actuated g/C Ratio					0.30		0.25	0.61			0.33	0.33
Clearance Time (s)					5.0		4.0	5.0			5.0	5.0
Vehicle Extension (s)					2.0		2.0	2.0			2.0	2.0
Lane Grp Cap (vph)					1012		451	2220			1197	536
v/s Ratio Prot					c0.26		c0.21	0.19			c0.14	
v/s Ratio Perm												0.04
v/c Ratio					0.87		0.86	0.30			0.43	0.12
Uniform Delay, d1					39.7		42.9	10.9			31.2	27.9
Progression Factor					1.00		0.61	0.30			1.00	1.00
Incremental Delay, d2					8.2		13.1	0.3			1.1	0.5
Delay (s)					48.0		39.4	3.6			32.3	28.4
Level of Service					D		D	A			C	C
Approach Delay (s)		0.0			48.0			16.7			31.2	
Approach LOS		A			D			B			C	

Intersection Summary			
HCM Average Control Delay	31.4	HCM Level of Service	C
HCM Volume to Capacity ratio	0.70		
Actuated Cycle Length (s)	120.0	Sum of lost time (s)	14.0
Intersection Capacity Utilization	72.1%	ICU Level of Service	C
Analysis Period (min)	15		
c Critical Lane Group			

UNIVERISTY CROSSINGS APARTMENTS TRAFFIC IMPACT ANALYSIS (JN 08139)
Existing Plus Ambient Plus Project Plus Cumulative 2014 Conditions
PM PEAK HOUR

Level Of Service Computation Report
2000 HCM Operations Method (Future Volume Alternative)

Intersection #8 Alabama Street / Redlands Boulevard

Cycle (sec):	80	Critical Vol./Cap.(X):	0.751
Loss Time (sec):	8	Average Delay (sec/veh):	31.1
Optimal Cycle: OPTIMIZED		Level Of Service:	C

Approach:	North Bound			South Bound			East Bound			West Bound		
Movement:	L -	T -	R	L -	T -	R	L -	T -	R	L -	T -	R
Control:	Protected			Protected			Protected			Protected		
Rights:	Include			Include			Include			Include		
Min. Green:	10	25	25	10	25	25	10	23	23	10	23	23
Y+R:	4.0	4.0	4.0	4.0	4.0	4.0	4.0	4.0	4.0	4.0	4.0	4.0
Lanes:	1 0	1	1 0	1 0	1	1 0	2 0	2	0 1	1 0	2	0 1
Volume Module:												
Base Vol:	67	525	77	127	537	104	273	530	78	86	347	153
Growth Adj:	1.04	1.04	1.04	1.04	1.04	1.04	1.04	1.04	1.04	1.04	1.04	1.04
Initial Bse:	70	546	80	132	559	108	284	551	81	89	361	159
Added Vol:	7	140	45	94	117	67	58	35	10	20	29	84
PasserByVol:	0	0	0	0	0	0	0	0	0	0	0	0
Initial Fut:	77	686	125	226	676	175	342	586	91	109	390	243
User Adj:	1.00	1.00	1.00	1.00	1.00	1.00	1.00	1.00	1.00	1.00	1.00	1.00
PHF Adj:	0.95	0.95	0.95	0.95	0.95	0.95	0.95	0.95	0.95	0.95	0.95	0.95
PHF Volume:	81	722	132	238	711	184	360	617	96	115	411	256
Reduct Vol:	0	0	0	0	0	0	0	0	0	0	0	0
Reduced Vol:	81	722	132	238	711	184	360	617	96	115	411	256
PCE Adj:	1.00	1.00	1.00	1.00	1.00	1.00	1.00	1.00	1.00	1.00	1.00	1.00
MLF Adj:	1.00	1.00	1.00	1.00	1.00	1.00	1.00	1.00	1.00	1.00	1.00	1.00
FinalVolume:	81	722	132	238	711	184	360	617	96	115	411	256
Saturation Flow Module:												
Sat/Lane:	1800	1800	1800	1800	1800	1800	1800	1800	1800	1800	1800	1800
Adjustment:	0.90	0.98	0.98	0.90	0.97	0.97	0.84	1.00	0.85	0.90	1.00	0.85
Lanes:	1.00	1.69	0.31	1.00	1.59	0.41	2.00	2.00	1.00	1.00	2.00	1.00
Final Sat.:	1615	2975	542	1615	2770	718	3040	3600	1530	1615	3600	1530
Capacity Analysis Module:												
Vol/Sat:	0.05	0.24	0.24	0.15	0.26	0.26	0.12	0.17	0.06	0.07	0.11	0.17
Crit Moves:		****		****			****					****
Green/Cycle:	0.14	0.31	0.31	0.17	0.34	0.34	0.13	0.29	0.29	0.13	0.29	0.29
Volume/Cap:	0.37	0.78	0.78	0.89	0.75	0.75	0.89	0.58	0.21	0.56	0.40	0.58
Delay/Veh:	32.4	28.5	28.5	60.3	26.0	26.0	54.3	24.9	21.5	36.2	23.2	26.4
User DelAdj:	1.00	1.00	1.00	1.00	1.00	1.00	1.00	1.00	1.00	1.00	1.00	1.00
AdjDel/Veh:	32.4	28.5	28.5	60.3	26.0	26.0	54.3	24.9	21.5	36.2	23.2	26.4
LOS by Move:	C	C	C	E	C	C	D	C	C	D	C	C
HCM2kAvgQ:	2	12	12	9	11	11	8	7	2	4	4	6

Note: Queue reported is the number of cars per lane.

Traffix 8.0.0715 (c) 2008 Dowling Assoc. Licensed to URBAN CROSSROADS, IRVINE

Movement	EBL	EBT	EBR	WBL	WBT	WBR	NBL	NBT	NBR	SBL	SBT	SBR
Lane Configurations												
Volume (vph)	0	0	0	175	374	229	415	1442	0	0	1126	385
Ideal Flow (vphpl)	1900	1900	1900	1900	1900	1900	1900	1900	1900	1900	1900	1900
Total Lost time (s)					5.0		4.0	5.0			5.0	5.0
Lane Util. Factor					0.95		1.00	0.95			0.95	1.00
Frpb, ped/bikes					0.99		1.00	1.00			1.00	1.00
Flpb, ped/bikes					1.00		1.00	1.00			1.00	1.00
Frt					0.96		1.00	1.00			1.00	0.85
Flt Protected					0.99		0.95	1.00			1.00	1.00
Satd. Flow (prot)					3394		1805	3610			3610	1615
Flt Permitted					0.99		0.95	1.00			1.00	1.00
Satd. Flow (perm)					3394		1805	3610			3610	1615
Peak-hour factor, PHF	0.97	0.97	0.97	0.97	0.97	0.97	0.97	0.97	0.97	0.97	0.97	0.97
Adj. Flow (vph)	0	0	0	180	386	236	428	1487	0	0	1161	397
RTOR Reduction (vph)	0	0	0	0	38	0	0	0	0	0	0	84
Lane Group Flow (vph)	0	0	0	0	764	0	428	1487	0	0	1161	313
Confl. Peds. (#/hr)						5						
Heavy Vehicles (%)	0%	0%	0%	0%	0%	0%	0%	0%	0%	0%	0%	0%
Turn Type				Split			Prot					Perm
Protected Phases				4	4		1	6			2	
Permitted Phases												2
Actuated Green, G (s)					28.4		33.0	81.6			44.6	44.6
Effective Green, g (s)					28.4		33.0	81.6			44.6	44.6
Actuated g/C Ratio					0.24		0.28	0.68			0.37	0.37
Clearance Time (s)					5.0		4.0	5.0			5.0	5.0
Vehicle Extension (s)					2.0		2.0	2.0			2.0	2.0
Lane Grp Cap (vph)					803		496	2455			1342	600
v/s Ratio Prot					c0.23		c0.24	0.41			c0.32	
v/s Ratio Perm												0.19
v/c Ratio					0.95		0.86	0.61			0.87	0.52
Uniform Delay, d1					45.1		41.3	10.4			34.9	29.4
Progression Factor					1.00		0.66	0.60			1.00	1.00
Incremental Delay, d2					20.5		6.4	0.5			7.6	3.2
Delay (s)					65.7		33.7	6.7			42.6	32.6
Level of Service					E		C	A			D	C
Approach Delay (s)		0.0			65.7			12.8			40.0	
Approach LOS		A			E			B			D	

Intersection Summary			
HCM Average Control Delay	32.6	HCM Level of Service	C
HCM Volume to Capacity ratio	0.89		
Actuated Cycle Length (s)	120.0	Sum of lost time (s)	14.0
Intersection Capacity Utilization	95.2%	ICU Level of Service	F
Analysis Period (min)	15		
c Critical Lane Group			

APPENDIX 7.1

Horizon Year (2035) Without Project Conditions
Intersection Operations Analysis Worksheets

UNIVERISTY CROSSINGS APARTMENTS TRAFFIC IMPACT ANALYSIS (JN 08139)
2035 Without Project Conditions
AM PEAK HOUR

Level Of Service Computation Report
2000 HCM Operations Method (Base Volume Alternative)

Intersection #1 California Street / Lugonia Avenue

Cycle (sec): 100 Critical Vol./Cap.(X): 0.497
Loss Time (sec): 6 Average Delay (sec/veh): 26.7
Optimal Cycle: OPTIMIZED Level Of Service: C

Approach:	North Bound			South Bound			East Bound			West Bound		
Movement:	L - T - R			L - T - R			L - T - R			L - T - R		
Control:	Permitted			Permitted			Split Phase			Split Phase		
Rights:	Include			Include			Include			Include		
Min. Green:	10	10	10	28	28	28	30	30	30	10	10	10
Y+R:	4.0	4.0	4.0	4.0	4.0	4.0	4.0	4.0	4.0	4.0	4.0	4.0
Lanes:	1 0	1 0	1	1 0	2 0	1	0 1	0 0	1	0 0	1! 0	0
Volume Module:												
Base Vol:	230	523	192	22	383	11	10	29	52	78	128	57
Growth Adj:	1.00	1.00	1.00	1.00	1.00	1.00	1.00	1.00	1.00	1.00	1.00	1.00
Initial Bse:	230	523	192	22	383	11	10	29	52	78	128	57
User Adj:	1.00	1.00	1.00	1.00	1.00	1.00	1.00	1.00	1.00	1.00	1.00	1.00
PHF Adj:	0.95	0.95	0.95	0.95	0.95	0.95	0.95	0.95	0.95	0.95	0.95	0.95
PHF Volume:	242	551	202	23	403	12	11	31	55	82	135	60
Reduct Vol:	0	0	0	0	0	0	0	0	0	0	0	0
Reduced Vol:	242	551	202	23	403	12	11	31	55	82	135	60
PCE Adj:	1.00	1.00	1.00	1.00	1.00	1.00	1.00	1.00	1.00	1.00	1.00	1.00
MLF Adj:	1.00	1.00	1.00	1.00	1.00	1.00	1.00	1.00	1.00	1.00	1.00	1.00
FinalVolume:	242	551	202	23	403	12	11	31	55	82	135	60
Saturation Flow Module:												
Sat/Lane:	1900	1900	1900	1900	1900	1900	1900	1900	1900	1900	1900	1900
Adjustment:	0.43	1.00	0.85	0.19	1.00	0.85	0.94	0.99	0.85	0.91	0.96	0.96
Lanes:	1.00	1.00	1.00	1.00	2.00	1.00	0.27	0.73	1.00	0.31	0.48	0.21
Final Sat.:	823	1900	1615	353	3800	1615	474	1375	1615	530	870	387
Capacity Analysis Module:												
Vol/Sat:	0.29	0.29	0.13	0.07	0.11	0.01	0.02	0.02	0.03	0.15	0.15	0.15
Crit Moves:		****					****				****	
Green/Cycle:	0.42	0.42	0.42	0.42	0.42	0.42	0.30	0.30	0.30	0.22	0.22	0.22
Volume/Cap:	0.71	0.69	0.30	0.16	0.25	0.02	0.07	0.07	0.11	0.69	0.69	0.69
Delay/Veh:	30.6	26.6	19.7	18.7	19.1	17.1	25.1	25.1	25.5	41.0	41.0	41.0
User DelAdj:	1.00	1.00	1.00	1.00	1.00	1.00	1.00	1.00	1.00	1.00	1.00	1.00
AdjDel/Veh:	30.6	26.6	19.7	18.7	19.1	17.1	25.1	25.1	25.5	41.0	41.0	41.0
LOS by Move:	C	C	B	B	B	B	C	C	C	D	D	D
HCM2kAvgQ:	8	15	4	1	4	0	1	1	1	9	9	9

Note: Queue reported is the number of cars per lane.

Traffix 8.0.0715 (c) 2008 Dowling Assoc. Licensed to URBAN CROSSROADS, IRVINE

UNIVERISTY CROSSINGS APARTMENTS TRAFFIC IMPACT ANALYSIS (JN 08139)
2035 Without Project Conditions
AM PEAK HOUR

Level Of Service Computation Report
2000 HCM 4-Way Stop Method (Base Volume Alternative)

Intersection #2 Nevada Street / Lugonia Avenue

Cycle (sec):	0	Critical Vol./Cap.(X):	0.653
Loss Time (sec):	0	Average Delay (sec/veh):	14.4
Optimal Cycle:	0	Level Of Service:	B

Approach:	North Bound			South Bound			East Bound			West Bound		
Movement:	L -	T -	R	L -	T -	R	L -	T -	R	L -	T -	R
Control:	Stop Sign			Stop Sign			Stop Sign			Stop Sign		
Rights:	Include			Include			Include			Include		
Min. Green:	0	0	0	0	0	0	0	0	0	0	0	0
Lanes:	0 1	0 0	1	0 0	1! 0	0	0 1	0 0	1	0 0	1! 0	0
Volume Module:												
Base Vol:	42	111	40	17	153	16	16	73	43	150	188	27
Growth Adj:	1.00	1.00	1.00	1.00	1.00	1.00	1.00	1.00	1.00	1.00	1.00	1.00
Initial Bse:	42	111	40	17	153	16	16	73	43	150	188	27
User Adj:	1.00	1.00	1.00	1.00	1.00	1.00	1.00	1.00	1.00	1.00	1.00	1.00
PHF Adj:	0.95	0.95	0.95	0.95	0.95	0.95	0.95	0.95	0.95	0.95	0.95	0.95
PHF Volume:	44	117	42	18	161	17	17	77	45	158	198	28
Reduct Vol:	0	0	0	0	0	0	0	0	0	0	0	0
Reduced Vol:	44	117	42	18	161	17	17	77	45	158	198	28
PCE Adj:	1.00	1.00	1.00	1.00	1.00	1.00	1.00	1.00	1.00	1.00	1.00	1.00
MLF Adj:	1.00	1.00	1.00	1.00	1.00	1.00	1.00	1.00	1.00	1.00	1.00	1.00
FinalVolume:	44	117	42	18	161	17	17	77	45	158	198	28
Saturation Flow Module:												
Adjustment:	1.00	1.00	1.00	1.00	1.00	1.00	1.00	1.00	1.00	1.00	1.00	1.00
Lanes:	0.27	0.73	1.00	0.09	0.82	0.09	0.18	0.82	1.00	0.41	0.52	0.07
Final Sat.:	143	379	593	49	438	46	95	433	597	242	303	44
Capacity Analysis Module:												
Vol/Sat:	0.31	0.31	0.07	0.37	0.37	0.37	0.18	0.18	0.08	0.65	0.65	0.65
Crit Moves:	****			****			****			****		
Delay/Veh:	11.8	11.8	8.7	12.7	12.7	12.7	10.3	10.3	8.7	18.8	18.8	18.8
Delay Adj:	1.00	1.00	1.00	1.00	1.00	1.00	1.00	1.00	1.00	1.00	1.00	1.00
AdjDel/Veh:	11.8	11.8	8.7	12.7	12.7	12.7	10.3	10.3	8.7	18.8	18.8	18.8
LOS by Move:	B	B	A	B	B	B	B	B	A	C	C	C
ApproachDel:	11.2			12.7			9.8			18.8		
Delay Adj:	1.00			1.00			1.00			1.00		
ApprAdjDel:	11.2			12.7			9.8			18.8		
LOS by Appr:	B			B			A			C		
AllWayAvgQ:	0.4	0.4	0.1	0.5	0.5	0.5	0.2	0.2	0.1	1.6	1.6	1.6

Note: Queue reported is the number of cars per lane.

Traffix 8.0.0715 (c) 2008 Dowling Assoc. Licensed to URBAN CROSSROADS, IRVINE

UNIVERISTY CROSSINGS APARTMENTS TRAFFIC IMPACT ANALYSIS (JN 08139)
2035 Without Project Conditions
AM PEAK HOUR

Level Of Service Computation Report
2000 HCM Operations Method (Base Volume Alternative)

Intersection #5 Alabama Street / Lugonia Avenue

Cycle (sec):	75	Critical Vol./Cap.(X):	0.484
Loss Time (sec):	8	Average Delay (sec/veh):	26.0
Optimal Cycle: OPTIMIZED		Level Of Service:	C

Approach:	North Bound			South Bound			East Bound			West Bound		
Movement:	L -	T -	R	L -	T -	R	L -	T -	R	L -	T -	R
Control:	Protected			Protected			Protected			Protected		
Rights:	Include			Include			Include			Include		
Min. Green:	10	20	20	10	20	20	10	24	24	10	24	24
Y+R:	4.0	4.0	4.0	4.0	4.0	4.0	4.0	4.0	4.0	4.0	4.0	4.0
Lanes:	1 0	2 0	1	1 0	3 0	1	1 0	1 1	0	1 0	2 0	1
Volume Module:												
Base Vol:	153	756	172	88	625	160	60	101	48	204	267	99
Growth Adj:	1.00	1.00	1.00	1.00	1.00	1.00	1.00	1.00	1.00	1.00	1.00	1.00
Initial Bse:	153	756	172	88	625	160	60	101	48	204	267	99
User Adj:	1.00	1.00	1.00	1.00	1.00	1.00	1.00	1.00	1.00	1.00	1.00	1.00
PHF Adj:	0.95	0.95	0.95	0.95	0.95	0.95	0.95	0.95	0.95	0.95	0.95	0.95
PHF Volume:	161	796	181	93	658	168	63	106	51	215	281	104
Reduct Vol:	0	0	0	0	0	0	0	0	0	0	0	0
Reduced Vol:	161	796	181	93	658	168	63	106	51	215	281	104
PCE Adj:	1.00	1.00	1.00	1.00	1.00	1.00	1.00	1.00	1.00	1.00	1.00	1.00
MLF Adj:	1.00	1.00	1.00	1.00	1.00	1.00	1.00	1.00	1.00	1.00	1.00	1.00
FinalVolume:	161	796	181	93	658	168	63	106	51	215	281	104
Saturation Flow Module:												
Sat/Lane:	1900	1900	1900	1900	1900	1900	1900	1900	1900	1900	1900	1900
Adjustment:	0.90	1.00	0.85	0.90	1.00	0.85	0.90	0.95	0.95	0.90	1.00	0.85
Lanes:	1.00	2.00	1.00	1.00	3.00	1.00	1.00	1.36	0.64	1.00	2.00	1.00
Final Sat.:	1710	3800	1615	1710	5700	1615	1710	2452	1165	1710	3800	1615
Capacity Analysis Module:												
Vol/Sat:	0.09	0.21	0.11	0.05	0.12	0.10	0.04	0.04	0.04	0.13	0.07	0.06
Crit Moves:		****		****				****		****		
Green/Cycle:	0.14	0.28	0.28	0.13	0.27	0.27	0.14	0.32	0.32	0.16	0.34	0.34
Volume/Cap:	0.69	0.76	0.41	0.41	0.42	0.38	0.26	0.14	0.14	0.76	0.22	0.19
Delay/Veh:	39.5	28.3	22.8	31.0	22.6	22.7	29.2	18.2	18.2	41.4	17.6	17.5
User DelAdj:	1.00	1.00	1.00	1.00	1.00	1.00	1.00	1.00	1.00	1.00	1.00	1.00
AdjDel/Veh:	39.5	28.3	22.8	31.0	22.6	22.7	29.2	18.2	18.2	41.4	17.6	17.5
LOS by Move:	D	C	C	C	C	C	C	B	B	D	B	B
HCM2kAvgQ:	5	10	4	3	4	3	2	1	1	7	2	2

Note: Queue reported is the number of cars per lane.

Traffix 8.0.0715 (c) 2008 Dowling Assoc. Licensed to URBAN CROSSROADS, IRVINE

Movement	EBL	EBT	EBR	WBL	WBT	WBR	NBL	NBT	NBR	SBL	SBT	SBR
Lane Configurations												
Volume (vph)	0	0	0	485	352	508	393	832	0	0	507	218
Ideal Flow (vphpl)	1900	1900	1900	1900	1900	1900	1900	1900	1900	1900	1900	1900
Total Lost time (s)					5.0		4.0	5.0			5.0	
Lane Util. Factor					0.95		1.00	0.95			0.95	
Frpb, ped/bikes					0.99		1.00	1.00			1.00	
Flpb, ped/bikes					1.00		1.00	1.00			1.00	
Frt					0.94		1.00	1.00			0.95	
Flt Protected					0.98		0.95	1.00			1.00	
Satd. Flow (prot)					3322		1805	3610			3447	
Flt Permitted					0.98		0.95	1.00			1.00	
Satd. Flow (perm)					3322		1805	3610			3447	
Peak-hour factor, PHF	0.95	0.95	0.95	0.95	0.95	0.95	0.95	0.95	0.95	0.95	0.95	0.95
Adj. Flow (vph)	0	0	0	511	371	535	414	876	0	0	534	229
RTOR Reduction (vph)	0	0	0	0	92	0	0	0	0	0	46	0
Lane Group Flow (vph)	0	0	0	0	1325	0	414	876	0	0	717	0
Confl. Peds. (#/hr)						5						
Heavy Vehicles (%)	0%	0%	0%	0%	0%	0%	0%	0%	0%	0%	0%	0%
Turn Type				Split			Prot					
Protected Phases				4	4		1	6			2	
Permitted Phases												
Actuated Green, G (s)					23.0		25.6	67.0			37.4	
Effective Green, g (s)					23.0		25.6	67.0			37.4	
Actuated g/C Ratio					0.23		0.26	0.67			0.37	
Clearance Time (s)					5.0		4.0	5.0			5.0	
Vehicle Extension (s)					2.0		2.0	2.0			2.0	
Lane Grp Cap (vph)					764		462	2419			1289	
v/s Ratio Prot					c0.40		c0.23	0.24			c0.21	
v/s Ratio Perm												
v/c Ratio					1.73		0.90	0.36			0.56	
Uniform Delay, d1					38.5		35.9	7.2			24.7	
Progression Factor					1.00		0.88	2.11			1.00	
Incremental Delay, d2					336.1		15.3	0.3			1.7	
Delay (s)					374.6		46.8	15.5			26.5	
Level of Service					F		D	B			C	
Approach Delay (s)		0.0			374.6			25.5			26.5	
Approach LOS		A			F			C			C	

Intersection Summary			
HCM Average Control Delay	168.3	HCM Level of Service	F
HCM Volume to Capacity ratio	0.97		
Actuated Cycle Length (s)	100.0	Sum of lost time (s)	14.0
Intersection Capacity Utilization	94.8%	ICU Level of Service	F
Analysis Period (min)	15		
c Critical Lane Group			

Movement	EBL	EBT	EBR	WBL	WBT	WBR	NBL	NBT	NBR	SBL	SBT	SBR
Lane Configurations												
Volume (vph)	320	44	479	0	0	0	0	904	141	189	804	0
Ideal Flow (vphpl)	1900	1900	1900	1900	1900	1900	1900	1900	1900	1900	1900	1900
Total Lost time (s)		5.0						5.0	5.0	4.0	5.0	
Lane Util. Factor		0.95						0.95	1.00	1.00	0.95	
Frpb, ped/bikes		1.00						1.00	0.98	1.00	1.00	
Flpb, ped/bikes		1.00						1.00	1.00	1.00	1.00	
Frt		0.91						1.00	0.85	1.00	1.00	
Flt Protected		0.98						1.00	1.00	0.95	1.00	
Satd. Flow (prot)		3241						3610	1581	1805	3610	
Flt Permitted		0.98						1.00	1.00	0.95	1.00	
Satd. Flow (perm)		3241						3610	1581	1805	3610	
Peak-hour factor, PHF	0.95	0.95	0.95	0.95	0.95	0.95	0.95	0.95	0.95	0.95	0.95	0.95
Adj. Flow (vph)	337	46	504	0	0	0	0	952	148	199	846	0
RTOR Reduction (vph)	0	129	0	0	0	0	0	0	82	0	0	0
Lane Group Flow (vph)	0	758	0	0	0	0	0	952	66	199	846	0
Confl. Peds. (#/hr)									5			
Heavy Vehicles (%)	0%	0%	0%	0%	0%	0%	0%	0%	0%	0%	0%	0%
Turn Type	Split								Perm	Prot		
Protected Phases	8	8						6		5	2	
Permitted Phases									6			
Actuated Green, G (s)		27.3						44.6	44.6	14.1	62.7	
Effective Green, g (s)		27.3						44.6	44.6	14.1	62.7	
Actuated g/C Ratio		0.27						0.45	0.45	0.14	0.63	
Clearance Time (s)		5.0						5.0	5.0	4.0	5.0	
Vehicle Extension (s)		2.0						2.0	2.0	2.0	2.0	
Lane Grp Cap (vph)		885						1610	705	255	2263	
v/s Ratio Prot		c0.23						c0.26		c0.11	0.23	
v/s Ratio Perm									0.04			
v/c Ratio		0.86						0.59	0.09	0.78	0.37	
Uniform Delay, d1		34.5						20.8	16.0	41.5	9.1	
Progression Factor		1.00						1.00	1.00	0.93	0.37	
Incremental Delay, d2		7.9						1.6	0.3	1.3	0.0	
Delay (s)		42.4						22.4	16.3	39.9	3.4	
Level of Service		D						C	B	D	A	
Approach Delay (s)		42.4			0.0			21.6			10.4	
Approach LOS		D			A			C			B	

Intersection Summary			
HCM Average Control Delay	23.8	HCM Level of Service	C
HCM Volume to Capacity ratio	0.71		
Actuated Cycle Length (s)	100.0	Sum of lost time (s)	14.0
Intersection Capacity Utilization	94.8%	ICU Level of Service	F
Analysis Period (min)	15		
c Critical Lane Group			

UNIVERISTY CROSSINGS APARTMENTS TRAFFIC IMPACT ANALYSIS (JN 08139)
2035 Without Project Conditions
AM PEAK HOUR

Level Of Service Computation Report
2000 HCM Operations Method (Base Volume Alternative)

Intersection #8 Alabama Street / Redlands Boulevard

Cycle (sec):	95	Critical Vol./Cap.(X):	0.860
Loss Time (sec):	8	Average Delay (sec/veh):	41.4
Optimal Cycle: OPTIMIZED		Level Of Service:	D

Approach:	North Bound			South Bound			East Bound			West Bound		
Movement:	L - T	- R		L - T	- R		L - T	- R		L - T	- R	
Control:	Split Phase			Split Phase			Protected			Protected		
Rights:	Include			Include			Include			Include		
Min. Green:	25	25	25	25	25	25	10	23	23	10	23	23
Y+R:	4.0	4.0	4.0	4.0	4.0	4.0	4.0	4.0	4.0	4.0	4.0	4.0
Lanes:	1 0	1	1 0	1 0	1	1 0	1 0	2	0 1	1 0	2	0 1
Volume Module:												
Base Vol:	94	650	75	225	685	232	185	223	42	130	524	316
Growth Adj:	1.00	1.00	1.00	1.00	1.00	1.00	1.00	1.00	1.00	1.00	1.00	1.00
Initial Bse:	94	650	75	225	685	232	185	223	42	130	524	316
User Adj:	1.00	1.00	1.00	1.00	1.00	1.00	1.00	1.00	1.00	1.00	1.00	1.00
PHF Adj:	0.95	0.95	0.95	0.95	0.95	0.95	0.95	0.95	0.95	0.95	0.95	0.95
PHF Volume:	99	684	79	237	721	244	195	235	44	137	552	333
Reduct Vol:	0	0	0	0	0	0	0	0	0	0	0	0
Reduced Vol:	99	684	79	237	721	244	195	235	44	137	552	333
PCE Adj:	1.00	1.00	1.00	1.00	1.00	1.00	1.00	1.00	1.00	1.00	1.00	1.00
MLF Adj:	1.00	1.00	1.00	1.00	1.00	1.00	1.00	1.00	1.00	1.00	1.00	1.00
FinalVolume:	99	684	79	237	721	244	195	235	44	137	552	333
Saturation Flow Module:												
Sat/Lane:	1900	1900	1900	1900	1900	1900	1900	1900	1900	1900	1900	1900
Adjustment:	0.90	0.99	0.99	0.90	0.96	0.96	0.90	1.00	0.85	0.90	1.00	0.85
Lanes:	1.00	1.79	0.21	1.00	1.49	0.51	1.00	2.00	1.00	1.00	2.00	1.00
Final Sat.:	1710	3356	387	1710	2731	925	1710	3800	1615	1710	3800	1615
Capacity Analysis Module:												
Vol/Sat:	0.06	0.20	0.20	0.14	0.26	0.26	0.11	0.06	0.03	0.08	0.15	0.21
Crit Moves:		****			****		****					****
Green/Cycle:	0.26	0.26	0.26	0.29	0.29	0.29	0.12	0.25	0.25	0.11	0.24	0.24
Volume/Cap:	0.22	0.77	0.77	0.48	0.92	0.92	0.92	0.24	0.11	0.72	0.60	0.85
Delay/Veh:	27.6	36.3	36.3	28.8	45.6	45.6	81.6	28.2	27.2	53.6	33.0	50.5
User DelAdj:	1.00	1.00	1.00	1.00	1.00	1.00	1.00	1.00	1.00	1.00	1.00	1.00
AdjDel/Veh:	27.6	36.3	36.3	28.8	45.6	45.6	81.6	28.2	27.2	53.6	33.0	50.5
LOS by Move:	C	D	D	C	D	D	F	C	C	D	C	D
HCM2kAvgQ:	2	12	12	6	18	18	9	3	1	6	8	12

Note: Queue reported is the number of cars per lane.

Traffix 8.0.0715 (c) 2008 Dowling Assoc. Licensed to URBAN CROSSROADS, IRVINE

UNIVERISTY CROSSINGS APARTMENTS TRAFFIC IMPACT ANALYSIS (JN 08139)
2035 Without Project Conditions
PM PEAK HOUR

Level Of Service Computation Report
2000 HCM Operations Method (Base Volume Alternative)

Intersection #1 California Street / Lugonia Avenue

Cycle (sec): 110 Critical Vol./Cap.(X): 0.684
Loss Time (sec): 6 Average Delay (sec/veh): 39.0
Optimal Cycle: OPTIMIZED Level Of Service: D

Approach:	North Bound			South Bound			East Bound			West Bound		
Movement:	L - T - R			L - T - R			L - T - R			L - T - R		
Control:	Permitted			Permitted			Split Phase			Split Phase		
Rights:	Include			Include			Include			Include		
Min. Green:	10	10	10	28	28	28	30	30	30	10	10	10
Y+R:	4.0	4.0	4.0	4.0	4.0	4.0	4.0	4.0	4.0	4.0	4.0	4.0
Lanes:	1 0	1 0	1	1 0	2 0	1	0 1	0 0	1	0 0	1! 0	0
Volume Module:												
Base Vol:	86	600	250	71	748	10	13	109	310	252	69	83
Growth Adj:	1.00	1.00	1.00	1.00	1.00	1.00	1.00	1.00	1.00	1.00	1.00	1.00
Initial Bse:	86	600	250	71	748	10	13	109	310	252	69	83
User Adj:	1.00	1.00	1.00	1.00	1.00	1.00	1.00	1.00	1.00	1.00	1.00	1.00
PHF Adj:	0.95	0.95	0.95	0.95	0.95	0.95	0.95	0.95	0.95	0.95	0.95	0.95
PHF Volume:	91	632	263	75	787	11	14	115	326	265	73	87
Reduct Vol:	0	0	0	0	0	0	0	0	0	0	0	0
Reduced Vol:	91	632	263	75	787	11	14	115	326	265	73	87
PCE Adj:	1.00	1.00	1.00	1.00	1.00	1.00	1.00	1.00	1.00	1.00	1.00	1.00
MLF Adj:	1.00	1.00	1.00	1.00	1.00	1.00	1.00	1.00	1.00	1.00	1.00	1.00
FinalVolume:	91	632	263	75	787	11	14	115	326	265	73	87
Saturation Flow Module:												
Sat/Lane:	1900	1900	1900	1900	1900	1900	1900	1900	1900	1900	1900	1900
Adjustment:	0.23	1.00	0.85	0.13	1.00	0.85	0.94	1.00	0.85	0.89	0.94	0.94
Lanes:	1.00	1.00	1.00	1.00	2.00	1.00	0.11	0.89	1.00	0.64	0.16	0.20
Final Sat.:	434	1900	1615	239	3800	1615	200	1679	1615	1080	296	356
Capacity Analysis Module:												
Vol/Sat:	0.21	0.33	0.16	0.31	0.21	0.01	0.07	0.07	0.20	0.25	0.25	0.25
Crit Moves:		****					****					****
Green/Cycle:	0.37	0.37	0.37	0.37	0.37	0.37	0.30	0.30	0.30	0.28	0.28	0.28
Volume/Cap:	0.56	0.89	0.44	0.84	0.55	0.02	0.23	0.23	0.68	0.89	0.89	0.89
Delay/Veh:	31.6	45.6	26.3	77.6	27.7	21.7	29.5	29.5	38.3	56.4	56.4	56.4
User DelAdj:	1.00	1.00	1.00	1.00	1.00	1.00	1.00	1.00	1.00	1.00	1.00	1.00
AdjDel/Veh:	31.6	45.6	26.3	77.6	27.7	21.7	29.5	29.5	38.3	56.4	56.4	56.4
LOS by Move:	C	D	C	E	C	C	C	C	D	E	E	E
HCM2kAvgQ:	3	23	7	5	11	0	3	3	11	18	18	18

Note: Queue reported is the number of cars per lane.

Traffix 8.0.0715 (c) 2008 Dowling Assoc. Licensed to URBAN CROSSROADS, IRVINE

UNIVERISTY CROSSINGS APARTMENTS TRAFFIC IMPACT ANALYSIS (JN 08139)
2035 Without Project Conditions
PM PEAK HOUR

Level Of Service Computation Report
2000 HCM 4-Way Stop Method (Base Volume Alternative)

Intersection #2 Nevada Street / Lugonia Avenue

Cycle (sec):	0	Critical Vol./Cap.(X):	0.953
Loss Time (sec):	0	Average Delay (sec/veh):	40.5
Optimal Cycle:	0	Level Of Service:	E

Approach:	North Bound			South Bound			East Bound			West Bound		
Movement:	L -	T -	R	L -	T -	R	L -	T -	R	L -	T -	R
Control:	Stop Sign			Stop Sign			Stop Sign			Stop Sign		
Rights:	Include			Include			Include			Include		
Min. Green:	0	0	0	0	0	0	0	0	0	0	0	0
Lanes:	0 1	0 0	1	0 0	1! 0	0	0 1	0 0	1	0 0	1! 0	0
Volume Module:												
Base Vol:	36	277	239	40	197	11	46	317	79	150	206	19
Growth Adj:	1.00	1.00	1.00	1.00	1.00	1.00	1.00	1.00	1.00	1.00	1.00	1.00
Initial Bse:	36	277	239	40	197	11	46	317	79	150	206	19
User Adj:	1.00	1.00	1.00	1.00	1.00	1.00	1.00	1.00	1.00	1.00	1.00	1.00
PHF Adj:	0.95	0.95	0.95	0.95	0.95	0.95	0.95	0.95	0.95	0.95	0.95	0.95
PHF Volume:	38	292	252	42	207	12	48	334	83	158	217	20
Reduct Vol:	0	0	0	0	0	0	0	0	0	0	0	0
Reduced Vol:	38	292	252	42	207	12	48	334	83	158	217	20
PCE Adj:	1.00	1.00	1.00	1.00	1.00	1.00	1.00	1.00	1.00	1.00	1.00	1.00
MLF Adj:	1.00	1.00	1.00	1.00	1.00	1.00	1.00	1.00	1.00	1.00	1.00	1.00
FinalVolume:	38	292	252	42	207	12	48	334	83	158	217	20
Saturation Flow Module:												
Adjustment:	1.00	1.00	1.00	1.00	1.00	1.00	1.00	1.00	1.00	1.00	1.00	1.00
Lanes:	0.12	0.88	1.00	0.16	0.80	0.04	0.13	0.87	1.00	0.40	0.55	0.05
Final Sat.:	48	368	455	61	299	17	53	367	461	166	227	21
Capacity Analysis Module:												
Vol/Sat:	0.79	0.79	0.55	0.69	0.69	0.69	0.91	0.91	0.18	0.95	0.95	0.95
Crit Moves:	****			****				****				****
Delay/Veh:	35.3	35.3	19.2	28.8	28.8	28.8	51.3	51.3	12.1	61.6	61.6	61.6
Delay Adj:	1.00	1.00	1.00	1.00	1.00	1.00	1.00	1.00	1.00	1.00	1.00	1.00
AdjDel/Veh:	35.3	35.3	19.2	28.8	28.8	28.8	51.3	51.3	12.1	61.6	61.6	61.6
LOS by Move:	E	E	C	D	D	D	F	F	B	F	F	F
ApproachDel:	28.4			28.8			44.3			61.6		
Delay Adj:	1.00			1.00			1.00			1.00		
ApprAdjDel:	28.4			28.8			44.3			61.6		
LOS by Appr:	D			D			E			F		
AllWayAvgQ:	2.8	2.8	1.1	1.7	1.7	1.7	4.7	4.7	0.2	5.7	5.7	5.7

Note: Queue reported is the number of cars per lane.

Traffix 8.0.0715 (c) 2008 Dowling Assoc. Licensed to URBAN CROSSROADS, IRVINE

UNIVERISTY CROSSINGS APARTMENTS TRAFFIC IMPACT ANALYSIS (JN 08139)
2035 Without Project Conditions
PM PEAK HOUR

Level Of Service Computation Report
2000 HCM Operations Method (Base Volume Alternative)

Intersection #5 Alabama Street / Lugonia Avenue

Cycle (sec): 130 Critical Vol./Cap.(X): 0.980
Loss Time (sec): 8 Average Delay (sec/veh): 59.9
Optimal Cycle: OPTIMIZED Level Of Service: E

Approach:	North Bound			South Bound			East Bound			West Bound		
Movement:	L - T - R			L - T - R			L - T - R			L - T - R		
Control:	Protected			Protected			Protected			Protected		
Rights:	Include			Include			Include			Include		
Min. Green:	10	20	20	10	20	20	10	24	24	10	24	24
Y+R:	4.0	4.0	4.0	4.0	4.0	4.0	4.0	4.0	4.0	4.0	4.0	4.0
Lanes:	1 0	2 0	1	1 0	3 0	1	1 0	1 1	0	1 0	2 0	1
Volume Module:												
Base Vol:	141	1325	441	305	1297	26	149	394	112	394	309	181
Growth Adj:	1.00	1.00	1.00	1.00	1.00	1.00	1.00	1.00	1.00	1.00	1.00	1.00
Initial Bse:	141	1325	441	305	1297	26	149	394	112	394	309	181
User Adj:	1.00	1.00	1.00	1.00	1.00	1.00	1.00	1.00	1.00	1.00	1.00	1.00
PHF Adj:	0.97	0.97	0.97	0.97	0.97	0.97	0.97	0.97	0.97	0.97	0.97	0.97
PHF Volume:	145	1362	453	313	1333	27	153	405	115	405	318	186
Reduct Vol:	0	0	0	0	0	0	0	0	0	0	0	0
Reduced Vol:	145	1362	453	313	1333	27	153	405	115	405	318	186
PCE Adj:	1.00	1.00	1.00	1.00	1.00	1.00	1.00	1.00	1.00	1.00	1.00	1.00
MLF Adj:	1.00	1.00	1.00	1.00	1.00	1.00	1.00	1.00	1.00	1.00	1.00	1.00
FinalVolume:	145	1362	453	313	1333	27	153	405	115	405	318	186
Saturation Flow Module:												
Sat/Lane:	1900	1900	1900	1900	1900	1900	1900	1900	1900	1900	1900	1900
Adjustment:	0.90	1.00	0.85	0.90	1.00	0.85	0.90	0.97	0.97	0.90	1.00	0.85
Lanes:	1.00	2.00	1.00	1.00	3.00	1.00	1.00	1.56	0.44	1.00	2.00	1.00
Final Sat.:	1710	3800	1615	1710	5700	1615	1710	2861	813	1710	3800	1615
Capacity Analysis Module:												
Vol/Sat:	0.08	0.36	0.28	0.18	0.23	0.02	0.09	0.14	0.14	0.24	0.08	0.12
Crit Moves:		****		****				****		****		
Green/Cycle:	0.14	0.35	0.35	0.18	0.39	0.39	0.14	0.18	0.18	0.23	0.28	0.28
Volume/Cap:	0.61	1.03	0.81	1.03	0.61	0.04	0.66	0.77	0.77	1.03	0.30	0.41
Delay/Veh:	57.0	76.0	47.1	113.8	32.6	25.0	60.4	55.6	55.6	104.2	37.1	38.8
User DelAdj:	1.00	1.00	1.00	1.00	1.00	1.00	1.00	1.00	1.00	1.00	1.00	1.00
AdjDel/Veh:	57.0	76.0	47.1	113.8	32.6	25.0	60.4	55.6	55.6	104.2	37.1	38.8
LOS by Move:	E	E	D	F	C	C	E	E	E	F	D	D
HCM2kAvgQ:	7	35	18	19	14	1	7	12	12	24	5	6

Note: Queue reported is the number of cars per lane.

Traffix 8.0.0715 (c) 2008 Dowling Assoc. Licensed to URBAN CROSSROADS, IRVINE

Movement	EBL	EBT	EBR	WBL	WBT	WBR	NBL	NBT	NBR	SBL	SBT	SBR
Lane Configurations												
Volume (vph)	0	0	0	189	431	269	464	1818	0	0	1513	485
Ideal Flow (vphpl)	1900	1900	1900	1900	1900	1900	1900	1900	1900	1900	1900	1900
Total Lost time (s)					5.0		4.0	5.0			5.0	
Lane Util. Factor					0.95		1.00	0.95			0.95	
Frpb, ped/bikes					0.99		1.00	1.00			1.00	
Flpb, ped/bikes					1.00		1.00	1.00			1.00	
Frt					0.95		1.00	1.00			0.96	
Flt Protected					0.99		0.95	1.00			1.00	
Satd. Flow (prot)					3391		1805	3610			3479	
Flt Permitted					0.99		0.95	1.00			1.00	
Satd. Flow (perm)					3391		1805	3610			3479	
Peak-hour factor, PHF	0.97	0.97	0.97	0.97	0.97	0.97	0.97	0.97	0.97	0.97	0.97	0.97
Adj. Flow (vph)	0	0	0	195	444	277	478	1874	0	0	1560	500
RTOR Reduction (vph)	0	0	0	0	19	0	0	0	0	0	30	0
Lane Group Flow (vph)	0	0	0	0	897	0	478	1874	0	0	2030	0
Confl. Peds. (#/hr)						5						
Heavy Vehicles (%)	0%	0%	0%	0%	0%	0%	0%	0%	0%	0%	0%	0%
Turn Type				Split			Prot					
Protected Phases				4	4		1	6			2	
Permitted Phases												
Actuated Green, G (s)					23.0		27.5	67.0			35.5	
Effective Green, g (s)					23.0		27.5	67.0			35.5	
Actuated g/C Ratio					0.23		0.28	0.67			0.36	
Clearance Time (s)					5.0		4.0	5.0			5.0	
Vehicle Extension (s)					2.0		2.0	2.0			2.0	
Lane Grp Cap (vph)					780		496	2419			1235	
v/s Ratio Prot					c0.26		c0.26	0.52			c0.58	
v/s Ratio Perm												
v/c Ratio					1.15		0.96	0.77			1.64	
Uniform Delay, d1					38.5		35.8	11.3			32.2	
Progression Factor					1.00		0.78	1.77			1.00	
Incremental Delay, d2					81.9		5.9	0.2			293.2	
Delay (s)					120.4		34.0	20.3			325.5	
Level of Service					F		C	C			F	
Approach Delay (s)		0.0			120.4			23.1			325.5	
Approach LOS		A			F			C			F	

Intersection Summary			
HCM Average Control Delay	156.7	HCM Level of Service	F
HCM Volume to Capacity ratio	1.29		
Actuated Cycle Length (s)	100.0	Sum of lost time (s)	14.0
Intersection Capacity Utilization	120.9%	ICU Level of Service	H
Analysis Period (min)	15		
c Critical Lane Group			

Movement	EBL	EBT	EBR	WBL	WBT	WBR	NBL	NBT	NBR	SBL	SBT	SBR
Lane Configurations												
Volume (vph)	631	77	506	0	0	0	0	1651	332	364	1338	0
Ideal Flow (vphpl)	1900	1900	1900	1900	1900	1900	1900	1900	1900	1900	1900	1900
Total Lost time (s)		5.0						5.0	5.0	4.0	5.0	
Lane Util. Factor		0.95						0.95	1.00	1.00	0.95	
Frpb, ped/bikes		1.00						1.00	0.98	1.00	1.00	
Flpb, ped/bikes		1.00						1.00	1.00	1.00	1.00	
Frt		0.94						1.00	0.85	1.00	1.00	
Flt Protected		0.97						1.00	1.00	0.95	1.00	
Satd. Flow (prot)		3299						3610	1581	1805	3610	
Flt Permitted		0.97						1.00	1.00	0.95	1.00	
Satd. Flow (perm)		3299						3610	1581	1805	3610	
Peak-hour factor, PHF	0.99	0.99	0.99	0.99	0.99	0.99	0.99	0.99	0.99	0.99	0.99	0.99
Adj. Flow (vph)	637	78	511	0	0	0	0	1668	335	368	1352	0
RTOR Reduction (vph)	0	40	0	0	0	0	0	0	151	0	0	0
Lane Group Flow (vph)	0	1186	0	0	0	0	0	1668	184	368	1352	0
Confl. Peds. (#/hr)									5			
Heavy Vehicles (%)	0%	0%	0%	0%	0%	0%	0%	0%	0%	0%	0%	0%
Turn Type	Split								Perm	Prot		
Protected Phases	8	8						6		5	2	
Permitted Phases									6			
Actuated Green, G (s)		29.0						41.0	41.0	16.0	61.0	
Effective Green, g (s)		29.0						41.0	41.0	16.0	61.0	
Actuated g/C Ratio		0.29						0.41	0.41	0.16	0.61	
Clearance Time (s)		5.0						5.0	5.0	4.0	5.0	
Vehicle Extension (s)		2.0						2.0	2.0	2.0	2.0	
Lane Grp Cap (vph)		957						1480	648	289	2202	
v/s Ratio Prot		c0.36						c0.46		c0.20	0.37	
v/s Ratio Perm									0.12			
v/c Ratio		1.24						1.13	0.28	1.27	0.61	
Uniform Delay, d1		35.5						29.5	19.7	42.0	12.2	
Progression Factor		1.00						1.00	1.00	0.75	0.68	
Incremental Delay, d2		116.8						66.4	1.1	125.6	0.1	
Delay (s)		152.3						95.9	20.8	157.2	8.4	
Level of Service		F						F	C	F	A	
Approach Delay (s)		152.3			0.0			83.4			40.2	
Approach LOS		F			A			F			D	

Intersection Summary			
HCM Average Control Delay	85.4	HCM Level of Service	F
HCM Volume to Capacity ratio	1.19		
Actuated Cycle Length (s)	100.0	Sum of lost time (s)	14.0
Intersection Capacity Utilization	120.9%	ICU Level of Service	H
Analysis Period (min)	15		
c Critical Lane Group			

UNIVERISTY CROSSINGS APARTMENTS TRAFFIC IMPACT ANALYSIS (JN 08139)
2035 Without Project Conditions
PM PEAK HOUR

Level Of Service Computation Report
2000 HCM Operations Method (Base Volume Alternative)

Intersection #8 Alabama Street / Redlands Boulevard

Cycle (sec): 125 Critical Vol./Cap.(X): 1.251
Loss Time (sec): 8 Average Delay (sec/veh): 123.8
Optimal Cycle: OPTIMIZED Level Of Service: F

Approach:	North Bound			South Bound			East Bound			West Bound		
Movement:	L - T - R			L - T - R			L - T - R			L - T - R		
Control:	Split Phase			Split Phase			Protected			Protected		
Rights:	Include			Include			Include			Include		
Min. Green:	25	25	25	25	25	25	10	23	23	10	23	23
Y+R:	4.0	4.0	4.0	4.0	4.0	4.0	4.0	4.0	4.0	4.0	4.0	4.0
Lanes:	1 0	1	1 0	1 0	1	1 0	1 0	2	0 1	1 0	2	0 1
Volume Module:												
Base Vol:	169	903	194	360	867	351	441	673	137	175	452	360
Growth Adj:	1.00	1.00	1.00	1.00	1.00	1.00	1.00	1.00	1.00	1.00	1.00	1.00
Initial Bse:	169	903	194	360	867	351	441	673	137	175	452	360
User Adj:	1.00	1.00	1.00	1.00	1.00	1.00	1.00	1.00	1.00	1.00	1.00	1.00
PHF Adj:	0.95	0.95	0.95	0.95	0.95	0.95	0.95	0.95	0.95	0.95	0.95	0.95
PHF Volume:	178	951	204	379	913	369	464	708	144	184	476	379
Reduct Vol:	0	0	0	0	0	0	0	0	0	0	0	0
Reduced Vol:	178	951	204	379	913	369	464	708	144	184	476	379
PCE Adj:	1.00	1.00	1.00	1.00	1.00	1.00	1.00	1.00	1.00	1.00	1.00	1.00
MLF Adj:	1.00	1.00	1.00	1.00	1.00	1.00	1.00	1.00	1.00	1.00	1.00	1.00
FinalVolume:	178	951	204	379	913	369	464	708	144	184	476	379
Saturation Flow Module:												
Sat/Lane:	1900	1900	1900	1900	1900	1900	1900	1900	1900	1900	1900	1900
Adjustment:	0.90	0.97	0.97	0.90	0.96	0.96	0.90	1.00	0.85	0.90	1.00	0.85
Lanes:	1.00	1.65	0.35	1.00	1.42	0.58	1.00	2.00	1.00	1.00	2.00	1.00
Final Sat.:	1710	3044	654	1710	2589	1048	1710	3800	1615	1710	3800	1615
Capacity Analysis Module:												
Vol/Sat:	0.10	0.31	0.31	0.22	0.35	0.35	0.27	0.19	0.09	0.11	0.13	0.23
Crit Moves:		****				****	****					****
Green/Cycle:	0.25	0.25	0.25	0.28	0.28	0.28	0.22	0.26	0.26	0.15	0.19	0.19
Volume/Cap:	0.42	1.25	1.25	0.79	1.25	1.25	1.25	0.73	0.35	0.73	0.67	1.25
Delay/Veh:	39.9	169	168.9	49.8	166	166.0	182.4	45.3	38.5	60.9	49.6	188.1
User DelAdj:	1.00	1.00	1.00	1.00	1.00	1.00	1.00	1.00	1.00	1.00	1.00	1.00
AdjDel/Veh:	39.9	169	168.9	49.8	166	166.0	182.4	45.3	38.5	60.9	49.6	188.1
LOS by Move:	D	F	F	D	F	F	F	D	D	E	D	F
HCM2kAvgQ:	6	38	38	16	42	42	33	14	5	9	9	26

Note: Queue reported is the number of cars per lane.

Traffix 8.0.0715 (c) 2008 Dowling Assoc. Licensed to URBAN CROSSROADS, IRVINE

APPENDIX 7.2

Horizon Year (2035) With Project Conditions
Intersection Operations Analysis Worksheets

UNIVERISTY CROSSINGS APARTMENTS TRAFFIC IMPACT ANALYSIS (JN 08139)
2035 With Project Conditions
AM PEAK HOUR

Level Of Service Computation Report
2000 HCM Operations Method (Future Volume Alternative)

Intersection #1 California Street / Lugonia Avenue

Cycle (sec): 100 Critical Vol./Cap.(X): 0.532
Loss Time (sec): 6 Average Delay (sec/veh): 28.7
Optimal Cycle: OPTIMIZED Level Of Service: C

Approach:	North Bound			South Bound			East Bound			West Bound		
Movement:	L -	T -	R	L -	T -	R	L -	T -	R	L -	T -	R
Control:	Permitted			Permitted			Split Phase			Split Phase		
Rights:	Include			Include			Include			Include		
Min. Green:	10	10	10	28	28	28	30	30	30	10	10	10
Y+R:	4.0	4.0	4.0	4.0	4.0	4.0	4.0	4.0	4.0	4.0	4.0	4.0
Lanes:	1 0	1 0	1	1 0	2 0	1	0 1	0 0	1	0 0	1! 0	0
Volume Module:												
Base Vol:	230	523	192	22	383	11	10	29	52	78	128	57
Growth Adj:	1.00	1.00	1.00	1.00	1.00	1.00	1.00	1.00	1.00	1.00	1.00	1.00
Initial Bse:	230	523	192	22	383	11	10	29	52	78	128	57
Added Vol:	0	0	5	2	0	0	0	3	0	20	13	7
PasserByVol:	0	0	0	0	0	0	0	0	0	0	0	0
Initial Fut:	230	523	197	24	383	11	10	32	52	98	141	64
User Adj:	1.00	1.00	1.00	1.00	1.00	1.00	1.00	1.00	1.00	1.00	1.00	1.00
PHF Adj:	0.95	0.95	0.95	0.95	0.95	0.95	0.95	0.95	0.95	0.95	0.95	0.95
PHF Volume:	242	551	207	25	403	12	11	34	55	103	148	67
Reduct Vol:	0	0	0	0	0	0	0	0	0	0	0	0
Reduced Vol:	242	551	207	25	403	12	11	34	55	103	148	67
PCE Adj:	1.00	1.00	1.00	1.00	1.00	1.00	1.00	1.00	1.00	1.00	1.00	1.00
MLF Adj:	1.00	1.00	1.00	1.00	1.00	1.00	1.00	1.00	1.00	1.00	1.00	1.00
FinalVolume:	242	551	207	25	403	12	11	34	55	103	148	67
Saturation Flow Module:												
Sat/Lane:	1900	1900	1900	1900	1900	1900	1900	1900	1900	1900	1900	1900
Adjustment:	0.43	1.00	0.85	0.17	1.00	0.85	0.94	0.99	0.85	0.91	0.96	0.96
Lanes:	1.00	1.00	1.00	1.00	2.00	1.00	0.25	0.75	1.00	0.33	0.46	0.21
Final Sat.:	814	1900	1615	317	3800	1615	441	1412	1615	577	831	377
Capacity Analysis Module:												
Vol/Sat:	0.30	0.29	0.13	0.08	0.11	0.01	0.02	0.02	0.03	0.18	0.18	0.18
Crit Moves:	****						****			****		
Green/Cycle:	0.40	0.40	0.40	0.40	0.40	0.40	0.30	0.30	0.30	0.24	0.24	0.24
Volume/Cap:	0.74	0.72	0.32	0.20	0.27	0.02	0.08	0.08	0.11	0.74	0.74	0.74
Delay/Veh:	34.6	28.8	20.9	20.3	20.2	18.1	25.2	25.2	25.5	42.1	42.1	42.1
User DelAdj:	1.00	1.00	1.00	1.00	1.00	1.00	1.00	1.00	1.00	1.00	1.00	1.00
AdjDel/Veh:	34.6	28.8	20.9	20.3	20.2	18.1	25.2	25.2	25.5	42.1	42.1	42.1
LOS by Move:	C	C	C	C	C	B	C	C	C	D	D	D
HCM2kAvgQ:	8	15	4	1	4	0	1	1	1	11	11	11

Note: Queue reported is the number of cars per lane.

Traffix 8.0.0715 (c) 2008 Dowling Assoc. Licensed to URBAN CROSSROADS, IRVINE

UNIVERISTY CROSSINGS APARTMENTS TRAFFIC IMPACT ANALYSIS (JN 08139)
2035 With Project Conditions
AM PEAK HOUR

Level Of Service Computation Report
2000 HCM 4-Way Stop Method (Future Volume Alternative)

Intersection #2 Nevada Street / Lugonia Avenue

Cycle (sec):	0	Critical Vol./Cap.(X):	0.777
Loss Time (sec):	0	Average Delay (sec/veh):	18.2
Optimal Cycle:	0	Level Of Service:	C

Approach:	North Bound				South Bound				East Bound				West Bound			
Movement:	L	- T	- R		L	- T	- R		L	- T	- R		L	- T	- R	
Control:	Stop Sign				Stop Sign				Stop Sign				Stop Sign			
Rights:	Include				Include				Include				Include			
Min. Green:	0	0	0		0	0	0		0	0	0		0	0	0	
Lanes:	0 1	0 0	1		0 0	1! 0	0		0 1	0 0	1		0 0	1! 0	0	
Volume Module:																
Base Vol:	42	111	40		17	153	16		16	73	43		150	188	27	
Growth Adj:	1.00	1.00	1.00		1.00	1.00	1.00		1.00	1.00	1.00		1.00	1.00	1.00	
Initial Bse:	42	111	40		17	153	16		16	73	43		150	188	27	
Added Vol:	0	0	5		2	0	0		0	10	0		20	40	7	
PasserByVol:	0	0	0		0	0	0		0	0	0		0	0	0	
Initial Fut:	42	111	45		19	153	16		16	83	43		170	228	34	
User Adj:	1.00	1.00	1.00		1.00	1.00	1.00		1.00	1.00	1.00		1.00	1.00	1.00	
PHF Adj:	0.95	0.95	0.95		0.95	0.95	0.95		0.95	0.95	0.95		0.95	0.95	0.95	
PHF Volume:	44	117	47		20	161	17		17	87	45		179	240	36	
Reduct Vol:	0	0	0		0	0	0		0	0	0		0	0	0	
Reduced Vol:	44	117	47		20	161	17		17	87	45		179	240	36	
PCE Adj:	1.00	1.00	1.00		1.00	1.00	1.00		1.00	1.00	1.00		1.00	1.00	1.00	
MLF Adj:	1.00	1.00	1.00		1.00	1.00	1.00		1.00	1.00	1.00		1.00	1.00	1.00	
FinalVolume:	44	117	47		20	161	17		17	87	45		179	240	36	
Saturation Flow Module:																
Adjustment:	1.00	1.00	1.00		1.00	1.00	1.00		1.00	1.00	1.00		1.00	1.00	1.00	
Lanes:	0.27	0.73	1.00		0.10	0.81	0.09		0.16	0.84	1.00		0.39	0.53	0.08	
Final Sat.:	136	359	559		51	411	43		83	429	575		230	309	46	
Capacity Analysis Module:																
Vol/Sat:	0.33	0.33	0.08		0.39	0.39	0.39		0.20	0.20	0.08		0.78	0.78	0.78	
Crit Moves:		****			****					****				****		
Delay/Veh:	12.4	12.4	9.1		13.4	13.4	13.4		10.8	10.8	8.9		26.0	26.0	26.0	
Delay Adj:	1.00	1.00	1.00		1.00	1.00	1.00		1.00	1.00	1.00		1.00	1.00	1.00	
AdjDel/Veh:	12.4	12.4	9.1		13.4	13.4	13.4		10.8	10.8	8.9		26.0	26.0	26.0	
LOS by Move:	B	B	A		B	B	B		B	B	A		D	D	D	
ApproachDel:		11.7				13.4				10.2				26.0		
Delay Adj:		1.00				1.00				1.00				1.00		
ApprAdjDel:		11.7				13.4				10.2				26.0		
LOS by Appr:		B				B				B				D		
AllWayAvgQ:	0.4	0.4	0.1		0.5	0.5	0.5		0.2	0.2	0.1		2.7	2.7	2.7	

Note: Queue reported is the number of cars per lane.

Traffix 8.0.0715 (c) 2008 Dowling Assoc. Licensed to URBAN CROSSROADS, IRVINE

UNIVERISTY CROSSINGS APARTMENTS TRAFFIC IMPACT ANALYSIS (JN 08139)
2035 With Project Conditions
AM PEAK HOUR

Level Of Service Computation Report
2000 HCM Unsignalized Method (Future Volume Alternative)

Intersection #3 Driveway 1 / Lugonia Avenue

Average Delay (sec/veh): 0.2 Worst Case Level Of Service: A[9.7]

Approach:	North Bound			South Bound			East Bound			West Bound		
Movement:	L - T - R			L - T - R			L - T - R			L - T - R		
Control:	Stop Sign			Stop Sign			Uncontrolled			Uncontrolled		
Rights:	Include			Include			Include			Include		
Lanes:	0 0 0	0 0		0 0 0	0 1		0 0 2	0 0		0 0 1	1 0	
Volume Module:												
Base Vol:	0	0	0	0	0	0	0	130	0	0	366	0
Growth Adj:	1.00	1.00	1.00	1.00	1.00	1.00	1.00	1.00	1.00	1.00	1.00	1.00
Initial Bse:	0	0	0	0	0	0	0	130	0	0	366	0
Added Vol:	0	0	0	0	0	13	0	16	0	0	53	3
PasserByVol:	0	0	0	0	0	0	0	0	0	0	0	0
Initial Fut:	0	0	0	0	0	13	0	146	0	0	419	3
User Adj:	1.00	1.00	1.00	1.00	1.00	1.00	1.00	1.00	1.00	1.00	1.00	1.00
PHF Adj:	0.95	0.95	0.95	0.95	0.95	0.95	0.95	0.95	0.95	0.95	0.95	0.95
PHF Volume:	0	0	0	0	0	14	0	154	0	0	441	3
Reduct Vol:	0	0	0	0	0	0	0	0	0	0	0	0
FinalVolume:	0	0	0	0	0	14	0	154	0	0	441	3
Critical Gap Module:												
Critical Gp:	xxxxx	xxxx	xxxxx	xxxxx	xxxx	6.9	xxxxx	xxxx	xxxxx	xxxxx	xxxx	xxxxx
FollowUpTim:	xxxxx	xxxx	xxxxx	xxxxx	xxxx	3.3	xxxxx	xxxx	xxxxx	xxxxx	xxxx	xxxxx
Capacity Module:												
Cnflict Vol:	xxxx	xxxx	xxxxx	xxxx	xxxx	222	xxxx	xxxx	xxxxx	xxxx	xxxx	xxxxx
Potent Cap.:	xxxx	xxxx	xxxxx	xxxx	xxxx	788	xxxx	xxxx	xxxxx	xxxx	xxxx	xxxxx
Move Cap.:	xxxx	xxxx	xxxxx	xxxx	xxxx	788	xxxx	xxxx	xxxxx	xxxx	xxxx	xxxxx
Volume/Cap:	xxxx	xxxx	xxxx	xxxx	xxxx	0.02	xxxx	xxxx	xxxx	xxxx	xxxx	xxxx
Level Of Service Module:												
2Way95thQ:	xxxx	xxxx	xxxxx	xxxx	xxxx	0.1	xxxx	xxxx	xxxxx	xxxx	xxxx	xxxxx
Control Del:	xxxxx	xxxx	xxxxx	xxxxx	xxxx	9.7	xxxxx	xxxx	xxxxx	xxxxx	xxxx	xxxxx
LOS by Move:	*	*	*	*	*	A	*	*	*	*	*	*
Movement:	LT - LTR - RT			LT - LTR - RT			LT - LTR - RT			LT - LTR - RT		
Shared Cap.:	xxxx	xxxx	xxxxx	xxxx	xxxx	xxxxx	xxxx	xxxx	xxxxx	xxxx	xxxx	xxxxx
SharedQueue:	xxxxx	xxxx	xxxxx	xxxxx	xxxx	xxxxx	xxxxx	xxxx	xxxxx	xxxxx	xxxx	xxxxx
Shrd ConDel:	xxxxx	xxxx	xxxxx	xxxxx	xxxx	xxxxx	xxxxx	xxxx	xxxxx	xxxxx	xxxx	xxxxx
Shared LOS:	*	*	*	*	*	*	*	*	*	*	*	*
ApproachDel:	xxxxxx			9.7			xxxxxx			xxxxxx		
ApproachLOS:	*			A			*			*		

Note: Queue reported is the number of cars per lane.

Traffix 8.0.0715 (c) 2008 Dowling Assoc. Licensed to URBAN CROSSROADS, IRVINE

UNIVERISTY CROSSINGS APARTMENTS TRAFFIC IMPACT ANALYSIS (JN 08139)
2035 With Project Conditions
AM PEAK HOUR

Level Of Service Computation Report
2000 HCM Unsignalized Method (Future Volume Alternative)

Intersection #4 Driveway 2 / Lugonia Avenue

Average Delay (sec/veh): 2.5 Worst Case Level Of Service: B[12.5]

Approach:	North Bound					South Bound					East Bound					West Bound				
Movement:	L	-	T	-	R	L	-	T	-	R	L	-	T	-	R	L	-	T	-	R
Control:	Stop Sign					Stop Sign					Uncontrolled					Uncontrolled				
Rights:	Include					Include					Include					Include				
Lanes:	0	0	0	0	0	0	0	1!	0	0	1	0	2	0	0	0	0	1	1	0
Volume Module:																				
Base Vol:	0	0	0	0	0	0	0	0	0	0	0	130	0	0	0	0	366	0		
Growth Adj:	1.00	1.00	1.00	1.00	1.00	1.00	1.00	1.00	1.00	1.00	1.00	1.00	1.00	1.00	1.00	1.00	1.00	1.00		
Initial Bse:	0	0	0	0	0	0	0	0	0	0	0	130	0	0	0	0	366	0		
Added Vol:	0	0	0	66	0	53	16	0	0	0	0	3	13							
PasserByVol:	0	0	0	0	0	0	0	0	0	0	0	0	0							
Initial Fut:	0	0	0	66	0	53	16	0	0	0	0	369	13							
User Adj:	1.00	1.00	1.00	1.00	1.00	1.00	1.00	1.00	1.00	1.00	1.00	1.00	1.00							
PHF Adj:	0.95	0.95	0.95	0.95	0.95	0.95	0.95	0.95	0.95	0.95	0.95	0.95	0.95							
PHF Volume:	0	0	0	69	0	56	17	0	0	0	0	388	14							
Reduct Vol:	0	0	0	0	0	0	0	0	0	0	0	0	0							
FinalVolume:	0	0	0	69	0	56	17	0	0	0	0	388	14							
Critical Gap Module:																				
Critical Gp:	xxxxx	xxxx	xxxxx	6.8	6.5	6.9	4.1	xxxx	xxxxx	xxxxx	xxxx	xxxxx								
FollowUpTim:	xxxxx	xxxx	xxxxx	3.5	4.0	3.3	2.2	xxxx	xxxxx	xxxxx	xxxx	xxxxx								
Capacity Module:																				
Cnflict Vol:	xxxx	xxxx	xxxxx	497	566	201	402	xxxx	xxxxx	xxxx	xxxx	xxxxx								
Potent Cap.:	xxxx	xxxx	xxxxx	507	436	813	1168	xxxx	xxxxx	xxxx	xxxx	xxxxx								
Move Cap.:	xxxx	xxxx	xxxxx	501	430	813	1168	xxxx	xxxxx	xxxx	xxxx	xxxxx								
Volume/Cap:	xxxx	xxxx	xxxx	0.14	0.00	0.07	0.01	xxxx	xxxx	xxxx	xxxx	xxxx								
Level Of Service Module:																				
2Way95thQ:	xxxx	xxxx	xxxxx	xxxx	xxxx	xxxxx	0.0	xxxx	xxxxx	xxxx	xxxx	xxxxx								
Control Del:	xxxxx	xxxx	xxxxx	xxxxx	xxxx	xxxxx	8.1	xxxx	xxxxx	xxxxx	xxxx	xxxxx								
LOS by Move:	*	*	*	*	*	*	A	*	*	*	*	*								
Movement:	LT	-	LTR	-	RT	LT	-	LTR	-	RT	LT	-	LTR	-	RT	LT	-	LTR	-	RT
Shared Cap.:	xxxx	xxxx	xxxxx	xxxx	605	xxxxx	xxxx	xxxx	xxxxx	xxxx	xxxx	xxxxx								
SharedQueue:	xxxxx	xxxx	xxxxx	xxxxx	0.8	xxxxx	xxxxx	xxxx	xxxxx	xxxxx	xxxx	xxxxx								
Shrd ConDel:	xxxxx	xxxx	xxxxx	xxxxx	12.5	xxxxx	xxxxx	xxxx	xxxxx	xxxxx	xxxx	xxxxx								
Shared LOS:	*	*	*	*	B	*	*	*	*	*	*	*								
ApproachDel:	xxxxxx				12.5		xxxxxx				xxxxxx									
ApproachLOS:	*				B		*				*									

Note: Queue reported is the number of cars per lane.

Traffix 8.0.0715 (c) 2008 Dowling Assoc. Licensed to URBAN CROSSROADS, IRVINE

UNIVERISTY CROSSINGS APARTMENTS TRAFFIC IMPACT ANALYSIS (JN 08139)
2035 With Project Conditions
AM PEAK HOUR

Level Of Service Computation Report
2000 HCM Operations Method (Future Volume Alternative)

Intersection #5 Alabama Street / Lugonia Avenue

Cycle (sec):	75	Critical Vol./Cap.(X):	0.500
Loss Time (sec):	8	Average Delay (sec/veh):	26.1
Optimal Cycle: OPTIMIZED		Level Of Service:	C

Approach:	North Bound			South Bound			East Bound			West Bound		
Movement:	L -	T -	R	L -	T -	R	L -	T -	R	L -	T -	R
Control:	Protected			Protected			Protected			Protected		
Rights:	Include			Include			Include			Include		
Min. Green:	10	20	20	10	20	20	10	24	24	10	24	24
Y+R:	4.0	4.0	4.0	4.0	4.0	4.0	4.0	4.0	4.0	4.0	4.0	4.0
Lanes:	1 0	2 0	1	1 0	3 0	1	1 0	1 1	0	1 0	2 0	1
Volume Module:												
Base Vol:	153	756	172	88	625	160	60	101	48	204	267	99
Growth Adj:	1.00	1.00	1.00	1.00	1.00	1.00	1.00	1.00	1.00	1.00	1.00	1.00
Initial Bse:	153	756	172	88	625	160	60	101	48	204	267	99
Added Vol:	6	0	0	0	0	5	20	20	26	0	5	0
PasserByVol:	0	0	0	0	0	0	0	0	0	0	0	0
Initial Fut:	159	756	172	88	625	165	80	121	74	204	272	99
User Adj:	1.00	1.00	1.00	1.00	1.00	1.00	1.00	1.00	1.00	1.00	1.00	1.00
PHF Adj:	0.95	0.95	0.95	0.95	0.95	0.95	0.95	0.95	0.95	0.95	0.95	0.95
PHF Volume:	167	796	181	93	658	174	84	127	78	215	286	104
Reduct Vol:	0	0	0	0	0	0	0	0	0	0	0	0
Reduced Vol:	167	796	181	93	658	174	84	127	78	215	286	104
PCE Adj:	1.00	1.00	1.00	1.00	1.00	1.00	1.00	1.00	1.00	1.00	1.00	1.00
MLF Adj:	1.00	1.00	1.00	1.00	1.00	1.00	1.00	1.00	1.00	1.00	1.00	1.00
FinalVolume:	167	796	181	93	658	174	84	127	78	215	286	104
Saturation Flow Module:												
Sat/Lane:	1900	1900	1900	1900	1900	1900	1900	1900	1900	1900	1900	1900
Adjustment:	0.90	1.00	0.85	0.90	1.00	0.85	0.90	0.94	0.94	0.90	1.00	0.85
Lanes:	1.00	2.00	1.00	1.00	3.00	1.00	1.00	1.24	0.76	1.00	2.00	1.00
Final Sat.:	1710	3800	1615	1710	5700	1615	1710	2224	1360	1710	3800	1615
Capacity Analysis Module:												
Vol/Sat:	0.10	0.21	0.11	0.05	0.12	0.11	0.05	0.06	0.06	0.13	0.08	0.06
Crit Moves:		****		****				****		****		
Green/Cycle:	0.14	0.28	0.28	0.13	0.27	0.27	0.14	0.32	0.32	0.16	0.34	0.34
Volume/Cap:	0.72	0.76	0.41	0.41	0.42	0.40	0.35	0.18	0.18	0.76	0.22	0.19
Delay/Veh:	41.4	28.3	22.8	31.0	22.6	22.8	29.8	18.5	18.5	41.4	17.6	17.5
User DelAdj:	1.00	1.00	1.00	1.00	1.00	1.00	1.00	1.00	1.00	1.00	1.00	1.00
AdjDel/Veh:	41.4	28.3	22.8	31.0	22.6	22.8	29.8	18.5	18.5	41.4	17.6	17.5
LOS by Move:	D	C	C	C	C	C	C	B	B	D	B	B
HCM2kAvgQ:	6	10	4	3	4	4	2	2	2	7	2	2

Note: Queue reported is the number of cars per lane.

Traffix 8.0.0715 (c) 2008 Dowling Assoc. Licensed to URBAN CROSSROADS, IRVINE

Movement	EBL	EBT	EBR	WBL	WBT	WBR	NBL	NBT	NBR	SBL	SBT	SBR
Lane Configurations												
Volume (vph)	0	0	0	485	352	511	393	835	0	0	533	218
Ideal Flow (vphpl)	1900	1900	1900	1900	1900	1900	1900	1900	1900	1900	1900	1900
Total Lost time (s)					5.0		4.0	5.0			5.0	
Lane Util. Factor					0.95		1.00	0.95			0.95	
Frpb, ped/bikes					0.99		1.00	1.00			1.00	
Flpb, ped/bikes					1.00		1.00	1.00			1.00	
Frt					0.94		1.00	1.00			0.96	
Flt Protected					0.98		0.95	1.00			1.00	
Satd. Flow (prot)					3321		1805	3610			3453	
Flt Permitted					0.98		0.95	1.00			1.00	
Satd. Flow (perm)					3321		1805	3610			3453	
Peak-hour factor, PHF	0.95	0.95	0.95	0.95	0.95	0.95	0.95	0.95	0.95	0.95	0.95	0.95
Adj. Flow (vph)	0	0	0	511	371	538	414	879	0	0	561	229
RTOR Reduction (vph)	0	0	0	0	92	0	0	0	0	0	43	0
Lane Group Flow (vph)	0	0	0	0	1328	0	414	879	0	0	747	0
Confl. Peds. (#/hr)						5						
Heavy Vehicles (%)	0%	0%	0%	0%	0%	0%	0%	0%	0%	0%	0%	0%
Turn Type				Split			Prot					
Protected Phases				4	4		1	6			2	
Permitted Phases												
Actuated Green, G (s)					23.0		25.6	67.0			37.4	
Effective Green, g (s)					23.0		25.6	67.0			37.4	
Actuated g/C Ratio					0.23		0.26	0.67			0.37	
Clearance Time (s)					5.0		4.0	5.0			5.0	
Vehicle Extension (s)					2.0		2.0	2.0			2.0	
Lane Grp Cap (vph)					764		462	2419			1291	
v/s Ratio Prot					c0.40		c0.23	0.24			c0.22	
v/s Ratio Perm												
v/c Ratio					1.74		0.90	0.36			0.58	
Uniform Delay, d1					38.5		35.9	7.2			25.0	
Progression Factor					1.00		0.87	2.11			1.00	
Incremental Delay, d2					337.4		15.1	0.3			1.9	
Delay (s)					375.9		46.5	15.5			26.9	
Level of Service					F		D	B			C	
Approach Delay (s)		0.0			375.9			25.5			26.9	
Approach LOS		A			F			C			C	

Intersection Summary			
HCM Average Control Delay	167.9	HCM Level of Service	F
HCM Volume to Capacity ratio	0.98		
Actuated Cycle Length (s)	100.0	Sum of lost time (s)	14.0
Intersection Capacity Utilization	95.6%	ICU Level of Service	F
Analysis Period (min)	15		
c Critical Lane Group			

Movement	EBL	EBT	EBR	WBL	WBT	WBR	NBL	NBT	NBR	SBL	SBT	SBR
Lane Configurations												
Volume (vph)	320	44	479	0	0	0	0	907	141	202	817	0
Ideal Flow (vphpl)	1900	1900	1900	1900	1900	1900	1900	1900	1900	1900	1900	1900
Total Lost time (s)		5.0						5.0	5.0	4.0	5.0	
Lane Util. Factor		0.95						0.95	1.00	1.00	0.95	
Frpb, ped/bikes		1.00						1.00	0.98	1.00	1.00	
Flpb, ped/bikes		1.00						1.00	1.00	1.00	1.00	
Frt		0.91						1.00	0.85	1.00	1.00	
Flt Protected		0.98						1.00	1.00	0.95	1.00	
Satd. Flow (prot)		3241						3610	1581	1805	3610	
Flt Permitted		0.98						1.00	1.00	0.95	1.00	
Satd. Flow (perm)		3241						3610	1581	1805	3610	
Peak-hour factor, PHF	0.95	0.95	0.95	0.95	0.95	0.95	0.95	0.95	0.95	0.95	0.95	0.95
Adj. Flow (vph)	337	46	504	0	0	0	0	955	148	213	860	0
RTOR Reduction (vph)	0	124	0	0	0	0	0	0	83	0	0	0
Lane Group Flow (vph)	0	763	0	0	0	0	0	955	65	213	860	0
Confl. Peds. (#/hr)									5			
Heavy Vehicles (%)	0%	0%	0%	0%	0%	0%	0%	0%	0%	0%	0%	0%
Turn Type	Split								Perm	Prot		
Protected Phases	8	8						6		5	2	
Permitted Phases									6			
Actuated Green, G (s)		27.4						44.1	44.1	14.5	62.6	
Effective Green, g (s)		27.4						44.1	44.1	14.5	62.6	
Actuated g/C Ratio		0.27						0.44	0.44	0.14	0.63	
Clearance Time (s)		5.0						5.0	5.0	4.0	5.0	
Vehicle Extension (s)		2.0						2.0	2.0	2.0	2.0	
Lane Grp Cap (vph)		888						1592	697	262	2260	
v/s Ratio Prot		c0.24						c0.26		c0.12	0.24	
v/s Ratio Perm									0.04			
v/c Ratio		0.86						0.60	0.09	0.81	0.38	
Uniform Delay, d1		34.5						21.2	16.3	41.4	9.2	
Progression Factor		1.00						1.00	1.00	0.91	0.37	
Incremental Delay, d2		8.0						1.7	0.3	1.7	0.0	
Delay (s)		42.5						22.9	16.6	39.6	3.5	
Level of Service		D						C	B	D	A	
Approach Delay (s)		42.5			0.0			22.1			10.7	
Approach LOS		D			A			C			B	

Intersection Summary			
HCM Average Control Delay	24.0	HCM Level of Service	C
HCM Volume to Capacity ratio	0.72		
Actuated Cycle Length (s)	100.0	Sum of lost time (s)	14.0
Intersection Capacity Utilization	95.6%	ICU Level of Service	F
Analysis Period (min)	15		
c Critical Lane Group			

UNIVERISTY CROSSINGS APARTMENTS TRAFFIC IMPACT ANALYSIS (JN 08139)
2035 With Project Conditions
AM PEAK HOUR

Level Of Service Computation Report
2000 HCM Operations Method (Future Volume Alternative)

Intersection #8 Alabama Street / Redlands Boulevard

Cycle (sec): 95 Critical Vol./Cap.(X): 0.864
Loss Time (sec): 8 Average Delay (sec/veh): 41.7
Optimal Cycle: OPTIMIZED Level Of Service: D

Approach:	North Bound			South Bound			East Bound			West Bound		
Movement:	L - T - R			L - T - R			L - T - R			L - T - R		
Control:	Split Phase			Split Phase			Protected			Protected		
Rights:	Include			Include			Include			Include		
Min. Green:	25	25	25	25	25	25	10	23	23	10	23	23
Y+R:	4.0	4.0	4.0	4.0	4.0	4.0	4.0	4.0	4.0	4.0	4.0	4.0
Lanes:	1 0	1	1 0	1 0	1	1 0	1 0	2	0 1	1 0	2	0 1
Volume Module:												
Base Vol:	94	650	75	225	685	232	185	223	42	130	524	316
Growth Adj:	1.00	1.00	1.00	1.00	1.00	1.00	1.00	1.00	1.00	1.00	1.00	1.00
Initial Bse:	94	650	75	225	685	232	185	223	42	130	524	316
Added Vol:	0	2	0	7	7	0	0	0	0	0	0	2
PasserByVol:	0	0	0	0	0	0	0	0	0	0	0	0
Initial Fut:	94	652	75	232	692	232	185	223	42	130	524	318
User Adj:	1.00	1.00	1.00	1.00	1.00	1.00	1.00	1.00	1.00	1.00	1.00	1.00
PHF Adj:	0.95	0.95	0.95	0.95	0.95	0.95	0.95	0.95	0.95	0.95	0.95	0.95
PHF Volume:	99	686	79	244	728	244	195	235	44	137	552	335
Reduct Vol:	0	0	0	0	0	0	0	0	0	0	0	0
Reduced Vol:	99	686	79	244	728	244	195	235	44	137	552	335
PCE Adj:	1.00	1.00	1.00	1.00	1.00	1.00	1.00	1.00	1.00	1.00	1.00	1.00
MLF Adj:	1.00	1.00	1.00	1.00	1.00	1.00	1.00	1.00	1.00	1.00	1.00	1.00
FinalVolume:	99	686	79	244	728	244	195	235	44	137	552	335
Saturation Flow Module:												
Sat/Lane:	1900	1900	1900	1900	1900	1900	1900	1900	1900	1900	1900	1900
Adjustment:	0.90	0.99	0.99	0.90	0.96	0.96	0.90	1.00	0.85	0.90	1.00	0.85
Lanes:	1.00	1.79	0.21	1.00	1.50	0.50	1.00	2.00	1.00	1.00	2.00	1.00
Final Sat.:	1710	3357	386	1710	2738	918	1710	3800	1615	1710	3800	1615
Capacity Analysis Module:												
Vol/Sat:	0.06	0.20	0.20	0.14	0.27	0.27	0.11	0.06	0.03	0.08	0.15	0.21
Crit Moves:		****			****		****					****
Green/Cycle:	0.26	0.26	0.26	0.29	0.29	0.29	0.12	0.25	0.25	0.11	0.24	0.24
Volume/Cap:	0.22	0.78	0.78	0.50	0.93	0.93	0.93	0.24	0.11	0.72	0.60	0.86
Delay/Veh:	27.6	36.4	36.4	28.9	46.3	46.3	82.9	28.3	27.3	53.7	33.0	51.2
User DelAdj:	1.00	1.00	1.00	1.00	1.00	1.00	1.00	1.00	1.00	1.00	1.00	1.00
AdjDel/Veh:	27.6	36.4	36.4	28.9	46.3	46.3	82.9	28.3	27.3	53.7	33.0	51.2
LOS by Move:	C	D	D	C	D	D	F	C	C	D	C	D
HCM2kAvgQ:	2	12	12	7	18	18	10	3	1	6	8	12

Note: Queue reported is the number of cars per lane.

Traffix 8.0.0715 (c) 2008 Dowling Assoc. Licensed to URBAN CROSSROADS, IRVINE

UNIVERISTY CROSSINGS APARTMENTS TRAFFIC IMPACT ANALYSIS (JN 08139)
2035 With Project Conditions
PM PEAK HOUR

Level Of Service Computation Report
2000 HCM Operations Method (Future Volume Alternative)

Intersection #1 California Street / Lugonia Avenue

Cycle (sec): 110 Critical Vol./Cap.(X): 0.705
Loss Time (sec): 6 Average Delay (sec/veh): 40.2
Optimal Cycle: OPTIMIZED Level Of Service: D

Approach:	North Bound			South Bound			East Bound			West Bound		
Movement:	L -	T -	R	L -	T -	R	L -	T -	R	L -	T -	R
Control:	Permitted			Permitted			Split Phase			Split Phase		
Rights:	Include			Include			Include			Include		
Min. Green:	10	10	10	28	28	28	30	30	30	10	10	10
Y+R:	4.0	4.0	4.0	4.0	4.0	4.0	4.0	4.0	4.0	4.0	4.0	4.0
Lanes:	1 0	1 0	1	1 0	2 0	1	0 1	0 0	1	0 0	1! 0	0
Volume Module:												
Base Vol:	86	600	250	71	748	10	13	109	310	252	69	83
Growth Adj:	1.00	1.00	1.00	1.00	1.00	1.00	1.00	1.00	1.00	1.00	1.00	1.00
Initial Bse:	86	600	250	71	748	10	13	109	310	252	69	83
Added Vol:	0	0	19	6	0	0	0	13	0	11	7	4
PasserByVol:	0	0	0	0	0	0	0	0	0	0	0	0
Initial Fut:	86	600	269	77	748	10	13	122	310	263	76	87
User Adj:	1.00	1.00	1.00	1.00	1.00	1.00	1.00	1.00	1.00	1.00	1.00	1.00
PHF Adj:	0.95	0.95	0.95	0.95	0.95	0.95	0.95	0.95	0.95	0.95	0.95	0.95
PHF Volume:	91	632	283	81	787	11	14	128	326	277	80	92
Reduct Vol:	0	0	0	0	0	0	0	0	0	0	0	0
Reduced Vol:	91	632	283	81	787	11	14	128	326	277	80	92
PCE Adj:	1.00	1.00	1.00	1.00	1.00	1.00	1.00	1.00	1.00	1.00	1.00	1.00
MLF Adj:	1.00	1.00	1.00	1.00	1.00	1.00	1.00	1.00	1.00	1.00	1.00	1.00
FinalVolume:	91	632	283	81	787	11	14	128	326	277	80	92
Saturation Flow Module:												
Sat/Lane:	1900	1900	1900	1900	1900	1900	1900	1900	1900	1900	1900	1900
Adjustment:	0.23	1.00	0.85	0.13	1.00	0.85	0.94	1.00	0.85	0.89	0.94	0.94
Lanes:	1.00	1.00	1.00	1.00	2.00	1.00	0.10	0.90	1.00	0.63	0.17	0.20
Final Sat.:	437	1900	1615	247	3800	1615	181	1699	1615	1069	309	354
Capacity Analysis Module:												
Vol/Sat:	0.21	0.33	0.18	0.33	0.21	0.01	0.08	0.08	0.20	0.26	0.26	0.26
Crit Moves:		****						****		****		
Green/Cycle:	0.37	0.37	0.37	0.37	0.37	0.37	0.29	0.29	0.29	0.29	0.29	0.29
Volume/Cap:	0.56	0.90	0.47	0.89	0.56	0.02	0.26	0.26	0.71	0.90	0.90	0.90
Delay/Veh:	31.8	46.9	27.0	91.3	28.0	22.0	30.6	30.6	40.0	56.3	56.3	56.3
User DelAdj:	1.00	1.00	1.00	1.00	1.00	1.00	1.00	1.00	1.00	1.00	1.00	1.00
AdjDel/Veh:	31.8	46.9	27.0	91.3	28.0	22.0	30.6	30.6	40.0	56.3	56.3	56.3
LOS by Move:	C	D	C	F	C	C	C	C	D	E	E	E
HCM2kAvgQ:	3	24	7	5	11	0	4	4	11	19	19	19

Note: Queue reported is the number of cars per lane.

Traffix 8.0.0715 (c) 2008 Dowling Assoc. Licensed to URBAN CROSSROADS, IRVINE

UNIVERISTY CROSSINGS APARTMENTS TRAFFIC IMPACT ANALYSIS (JN 08139)
2035 With Project Conditions
PM PEAK HOUR

Level Of Service Computation Report
2000 HCM 4-Way Stop Method (Future Volume Alternative)

Intersection #2 Nevada Street / Lugonia Avenue

Cycle (sec):	0	Critical Vol./Cap.(X):	1.074
Loss Time (sec):	0	Average Delay (sec/veh):	57.3
Optimal Cycle:	0	Level Of Service:	F

Approach:	North Bound			South Bound			East Bound			West Bound		
Movement:	L -	T -	R	L -	T -	R	L -	T -	R	L -	T -	R
Control:	Stop Sign			Stop Sign			Stop Sign			Stop Sign		
Rights:	Include			Include			Include			Include		
Min. Green:	0	0	0	0	0	0	0	0	0	0	0	0
Lanes:	0 1	0 0	1	0 0	1! 0	0	0 1	0 0	1	0 0	1! 0	0
Volume Module:												
Base Vol:	36	277	239	40	197	11	46	317	79	150	206	19
Growth Adj:	1.00	1.00	1.00	1.00	1.00	1.00	1.00	1.00	1.00	1.00	1.00	1.00
Initial Bse:	36	277	239	40	197	11	46	317	79	150	206	19
Added Vol:	0	0	19	6	0	0	0	38	0	11	21	4
PasserByVol:	0	0	0	0	0	0	0	0	0	0	0	0
Initial Fut:	36	277	258	46	197	11	46	355	79	161	227	23
User Adj:	1.00	1.00	1.00	1.00	1.00	1.00	1.00	1.00	1.00	1.00	1.00	1.00
PHF Adj:	0.95	0.95	0.95	0.95	0.95	0.95	0.95	0.95	0.95	0.95	0.95	0.95
PHF Volume:	38	292	272	48	207	12	48	374	83	169	239	24
Reduct Vol:	0	0	0	0	0	0	0	0	0	0	0	0
Reduced Vol:	38	292	272	48	207	12	48	374	83	169	239	24
PCE Adj:	1.00	1.00	1.00	1.00	1.00	1.00	1.00	1.00	1.00	1.00	1.00	1.00
MLF Adj:	1.00	1.00	1.00	1.00	1.00	1.00	1.00	1.00	1.00	1.00	1.00	1.00
FinalVolume:	38	292	272	48	207	12	48	374	83	169	239	24
Saturation Flow Module:												
Adjustment:	1.00	1.00	1.00	1.00	1.00	1.00	1.00	1.00	1.00	1.00	1.00	1.00
Lanes:	0.12	0.88	1.00	0.18	0.78	0.04	0.11	0.89	1.00	0.39	0.55	0.06
Final Sat.:	47	361	446	68	290	16	48	368	455	158	222	23
Capacity Analysis Module:												
Vol/Sat:	0.81	0.81	0.61	0.71	0.71	0.71	1.02	1.02	0.18	1.07	1.07	1.07
Crit Moves:	****					****		****		****		
Delay/Veh:	39.3	39.3	22.4	32.8	32.8	32.8	78.2	78.2	12.4	96.4	96.4	96.4
Delay Adj:	1.00	1.00	1.00	1.00	1.00	1.00	1.00	1.00	1.00	1.00	1.00	1.00
AdjDel/Veh:	39.3	39.3	22.4	32.8	32.8	32.8	78.2	78.2	12.4	96.4	96.4	96.4
LOS by Move:	E	E	C	D	D	D	F	F	B	F	F	F
ApproachDel:	31.7			32.8			67.4			96.4		
Delay Adj:	1.00			1.00			1.00			1.00		
ApprAdjDel:	31.7			32.8			67.4			96.4		
LOS by Appr:	D			D			F			F		
AllWayAvgQ:	3.1	3.1	1.4	2.1	2.1	2.1	7.7	7.7	0.2	9.4	9.4	9.4

Note: Queue reported is the number of cars per lane.

Traffix 8.0.0715 (c) 2008 Dowling Assoc. Licensed to URBAN CROSSROADS, IRVINE

UNIVERISTY CROSSINGS APARTMENTS TRAFFIC IMPACT ANALYSIS (JN 08139)
2035 With Project Conditions
PM PEAK HOUR

Level Of Service Computation Report
2000 HCM Unsignalized Method (Future Volume Alternative)

Intersection #3 Driveway 1 / Lugonia Avenue

Average Delay (sec/veh): 0.1 Worst Case Level Of Service: A[9.6]

Approach:	North Bound			South Bound			East Bound			West Bound		
Movement:	L -	T -	R	L -	T -	R	L -	T -	R	L -	T -	R
Control:	Stop Sign			Stop Sign			Uncontrolled			Uncontrolled		
Rights:	Include			Include			Include			Include		
Lanes:	0 0 0 0 0			0 0 0 0 1			0 0 2 0 0			0 0 1 1 0		
Volume Module:												
Base Vol:	0	0	0	0	0	0	0	595	0	0	375	0
Growth Adj:	1.00	1.00	1.00	1.00	1.00	1.00	1.00	1.00	1.00	1.00	1.00	1.00
Initial Bse:	0	0	0	0	0	0	0	595	0	0	375	0
Added Vol:	0	0	0	0	0	7	0	64	0	0	28	13
PasserByVol:	0	0	0	0	0	0	0	0	0	0	0	0
Initial Fut:	0	0	0	0	0	7	0	659	0	0	403	13
User Adj:	1.00	1.00	1.00	1.00	1.00	1.00	1.00	1.00	1.00	1.00	1.00	1.00
PHF Adj:	0.95	0.95	0.95	0.95	0.95	0.95	0.95	0.95	0.95	0.95	0.95	0.95
PHF Volume:	0	0	0	0	0	7	0	694	0	0	424	14
Reduct Vol:	0	0	0	0	0	0	0	0	0	0	0	0
FinalVolume:	0	0	0	0	0	7	0	694	0	0	424	14
Critical Gap Module:												
Critical Gp:	xxxxx	xxxx	xxxxx	xxxxx	xxxx	6.9	xxxxx	xxxx	xxxxx	xxxxx	xxxx	xxxxx
FollowUpTim:	xxxxx	xxxx	xxxxx	xxxxx	xxxx	3.3	xxxxx	xxxx	xxxxx	xxxxx	xxxx	xxxxx
Capacity Module:												
Cnflict Vol:	xxxx	xxxx	xxxxx	xxxx	xxxx	219	xxxx	xxxx	xxxxx	xxxx	xxxx	xxxxx
Potent Cap.:	xxxx	xxxx	xxxxx	xxxx	xxxx	791	xxxx	xxxx	xxxxx	xxxx	xxxx	xxxxx
Move Cap.:	xxxx	xxxx	xxxxx	xxxx	xxxx	791	xxxx	xxxx	xxxxx	xxxx	xxxx	xxxxx
Volume/Cap:	xxxx	xxxx	xxxx	xxxx	xxxx	0.01	xxxx	xxxx	xxxx	xxxx	xxxx	xxxx
Level Of Service Module:												
2Way95thQ:	xxxx	xxxx	xxxxx	xxxx	xxxx	0.0	xxxx	xxxx	xxxxx	xxxx	xxxx	xxxxx
Control Del:	xxxxx	xxxx	xxxxx	xxxxx	xxxx	9.6	xxxxx	xxxx	xxxxx	xxxxx	xxxx	xxxxx
LOS by Move:	*	*	*	*	*	A	*	*	*	*	*	*
Movement:	LT -	LTR -	RT	LT -	LTR -	RT	LT -	LTR -	RT	LT -	LTR -	RT
Shared Cap.:	xxxx	xxxx	xxxxx	xxxx	xxxx	xxxxx	xxxx	xxxx	xxxxx	xxxx	xxxx	xxxxx
SharedQueue:	xxxxx	xxxx	xxxxx	xxxxx	xxxx	xxxxx	xxxxx	xxxx	xxxxx	xxxxx	xxxx	xxxxx
Shrd ConDel:	xxxxx	xxxx	xxxxx	xxxxx	xxxx	xxxxx	xxxxx	xxxx	xxxxx	xxxxx	xxxx	xxxxx
Shared LOS:	*	*	*	*	*	*	*	*	*	*	*	*
ApproachDel:	xxxxxx			9.6			xxxxxx			xxxxxx		
ApproachLOS:	*			A			*			*		

Note: Queue reported is the number of cars per lane.

Traffix 8.0.0715 (c) 2008 Dowling Assoc. Licensed to URBAN CROSSROADS, IRVINE

UNIVERISTY CROSSINGS APARTMENTS TRAFFIC IMPACT ANALYSIS (JN 08139)
2035 With Project Conditions
PM PEAK HOUR

Level Of Service Computation Report
2000 HCM Unsignalized Method (Future Volume Alternative)

Intersection #4 Driveway 2 / Lugonia Avenue

Average Delay (sec/veh): 1.4 Worst Case Level Of Service: C[16.4]

Approach:	North Bound					South Bound					East Bound					West Bound				
Movement:	L	-	T	-	R	L	-	T	-	R	L	-	T	-	R	L	-	T	-	R
Control:	Stop Sign					Stop Sign					Uncontrolled					Uncontrolled				
Rights:	Include					Include					Include					Include				
Lanes:	0	0	0	0	0	0	0	1!	0	0	1	0	2	0	0	0	0	1	1	0
Volume Module:																				
Base Vol:	0	0	0	0	0	0	0	0	0	0	595	0	0	375	0					
Growth Adj:	1.00	1.00	1.00	1.00	1.00	1.00	1.00	1.00	1.00	1.00	1.00	1.00	1.00	1.00	1.00					
Initial Bse:	0	0	0	0	0	0	0	0	0	0	595	0	0	375	0					
Added Vol:	0	0	0	36	0	28	64	0	0	0	13	51								
PasserByVol:	0	0	0	0	0	0	0	0	0	0	0	0								
Initial Fut:	0	0	0	36	0	28	64	0	0	0	595	0	0	388	51					
User Adj:	1.00	1.00	1.00	1.00	1.00	1.00	1.00	1.00	1.00	1.00	1.00	1.00								
PHF Adj:	0.95	0.95	0.95	0.95	0.95	0.95	0.95	0.95	0.95	0.95	0.95	0.95								
PHF Volume:	0	0	0	38	0	29	67	0	0	0	626	0	0	408	54					
Reduct Vol:	0	0	0	0	0	0	0	0	0	0	0	0								
FinalVolume:	0	0	0	38	0	29	67	0	0	0	626	0	0	408	54					
Critical Gap Module:																				
Critical Gp:	xxxxx	xxxx	xxxxx	6.8	6.5	6.9	4.1	xxxx	xxxxx	xxxxx	xxxx	xxxxx								
FollowUpTim:	xxxxx	xxxx	xxxxx	3.5	4.0	3.3	2.2	xxxx	xxxxx	xxxxx	xxxx	xxxxx								
Capacity Module:																				
Cnflict Vol:	xxxx	xxxx	xxxxx	883	1196	231	462	xxxx	xxxxx	xxxx	xxxx	xxxxx								
Potent Cap.:	xxxx	xxxx	xxxxx	289	188	777	1110	xxxx	xxxxx	xxxx	xxxx	xxxxx								
Move Cap.:	xxxx	xxxx	xxxxx	276	176	777	1110	xxxx	xxxxx	xxxx	xxxx	xxxxx								
Volume/Cap:	xxxx	xxxx	xxxx	0.14	0.00	0.04	0.06	xxxx	xxxx	xxxx	xxxx	xxxx								
Level Of Service Module:																				
2Way95thQ:	xxxx	xxxx	xxxxx	xxxx	xxxx	xxxxx	0.2	xxxx	xxxxx	xxxx	xxxx	xxxxx								
Control Del:	xxxxx	xxxx	xxxxx	xxxxx	xxxx	xxxxx	8.5	xxxx	xxxxx	xxxxx	xxxx	xxxxx								
LOS by Move:	*	*	*	*	*	*	A	*	*	*	*	*								
Movement:	LT	-	LTR	-	RT	LT	-	LTR	-	RT	LT	-	LTR	-	RT	LT	-	LTR	-	RT
Shared Cap.:	xxxx	xxxx	xxxxx	xxxx	384	xxxxx	xxxx	xxxx	xxxxx	xxxx	xxxx	xxxxx								
SharedQueue:	xxxxx	xxxx	xxxxx	xxxxx	0.6	xxxxx	xxxxx	xxxx	xxxxx	xxxxx	xxxx	xxxxx								
Shrd ConDel:	xxxxx	xxxx	xxxxx	xxxxx	16.4	xxxxx	xxxxx	xxxx	xxxxx	xxxxx	xxxx	xxxxx								
Shared LOS:	*	*	*	*	C	*	*	*	*	*	*	*								
ApproachDel:	xxxxxx				16.4		xxxxxx				xxxxxx									
ApproachLOS:	*				C		*				*									

Note: Queue reported is the number of cars per lane.

Traffix 8.0.0715 (c) 2008 Dowling Assoc. Licensed to URBAN CROSSROADS, IRVINE

UNIVERISTY CROSSINGS APARTMENTS TRAFFIC IMPACT ANALYSIS (JN 08139)
2035 With Project Conditions
PM PEAK HOUR

Level Of Service Computation Report
2000 HCM Operations Method (Future Volume Alternative)

Intersection #5 Alabama Street / Lugonia Avenue

Cycle (sec): 130 Critical Vol./Cap.(X): 0.988
Loss Time (sec): 8 Average Delay (sec/veh): 60.5
Optimal Cycle: OPTIMIZED Level Of Service: E

Approach:	North Bound			South Bound			East Bound			West Bound		
Movement:	L - T - R			L - T - R			L - T - R			L - T - R		
Control:	Protected			Protected			Protected			Protected		
Rights:	Include			Include			Include			Include		
Min. Green:	10	20	20	10	20	20	10	24	24	10	24	24
Y+R:	4.0	4.0	4.0	4.0	4.0	4.0	4.0	4.0	4.0	4.0	4.0	4.0
Lanes:	1 0 2	0 1		1 0 3	0 1		1 0 1	1 0		1 0 2	0 1	
Volume Module:												
Base Vol:	141	1325	441	305	1297	26	149	394	112	394	309	181
Growth Adj:	1.00	1.00	1.00	1.00	1.00	1.00	1.00	1.00	1.00	1.00	1.00	1.00
Initial Bse:	141	1325	441	305	1297	26	149	394	112	394	309	181
Added Vol:	26	0	0	0	0	19	11	11	14	0	19	0
PasserByVol:	0	0	0	0	0	0	0	0	0	0	0	0
Initial Fut:	167	1325	441	305	1297	45	160	405	126	394	328	181
User Adj:	1.00	1.00	1.00	1.00	1.00	1.00	1.00	1.00	1.00	1.00	1.00	1.00
PHF Adj:	0.97	0.97	0.97	0.97	0.97	0.97	0.97	0.97	0.97	0.97	0.97	0.97
PHF Volume:	172	1362	453	313	1333	46	164	416	129	405	337	186
Reduct Vol:	0	0	0	0	0	0	0	0	0	0	0	0
Reduced Vol:	172	1362	453	313	1333	46	164	416	129	405	337	186
PCE Adj:	1.00	1.00	1.00	1.00	1.00	1.00	1.00	1.00	1.00	1.00	1.00	1.00
MLF Adj:	1.00	1.00	1.00	1.00	1.00	1.00	1.00	1.00	1.00	1.00	1.00	1.00
FinalVolume:	172	1362	453	313	1333	46	164	416	129	405	337	186
Saturation Flow Module:												
Sat/Lane:	1900	1900	1900	1900	1900	1900	1900	1900	1900	1900	1900	1900
Adjustment:	0.90	1.00	0.85	0.90	1.00	0.85	0.90	0.96	0.96	0.90	1.00	0.85
Lanes:	1.00	2.00	1.00	1.00	3.00	1.00	1.00	1.53	0.47	1.00	2.00	1.00
Final Sat.:	1710	3800	1615	1710	5700	1615	1710	2794	869	1710	3800	1615
Capacity Analysis Module:												
Vol/Sat:	0.10	0.36	0.28	0.18	0.23	0.03	0.10	0.15	0.15	0.24	0.09	0.12
Crit Moves:		****		****				****		****		
Green/Cycle:	0.16	0.35	0.35	0.18	0.37	0.37	0.14	0.18	0.18	0.23	0.27	0.27
Volume/Cap:	0.64	1.03	0.81	1.03	0.64	0.08	0.68	0.81	0.81	1.03	0.33	0.42
Delay/Veh:	56.3	76.0	47.1	113.8	34.7	26.9	60.5	57.9	57.9	104.2	38.0	39.6
User DelAdj:	1.00	1.00	1.00	1.00	1.00	1.00	1.00	1.00	1.00	1.00	1.00	1.00
AdjDel/Veh:	56.3	76.0	47.1	113.8	34.7	26.9	60.5	57.9	57.9	104.2	38.0	39.6
LOS by Move:	E	E	D	F	C	C	E	E	E	F	D	D
HCM2kAvgQ:	8	35	18	19	15	1	8	12	12	24	5	6

Note: Queue reported is the number of cars per lane.

Traffix 8.0.0715 (c) 2008 Dowling Assoc. Licensed to URBAN CROSSROADS, IRVINE

Movement	EBL	EBT	EBR	WBL	WBT	WBR	NBL	NBT	NBR	SBL	SBT	SBR
Lane Configurations												
Volume (vph)	0	0	0	189	431	282	464	1831	0	0	1527	485
Ideal Flow (vphpl)	1900	1900	1900	1900	1900	1900	1900	1900	1900	1900	1900	1900
Total Lost time (s)					5.0		4.0	5.0			5.0	
Lane Util. Factor					0.95		1.00	0.95			0.95	
Frpb, ped/bikes					0.99		1.00	1.00			1.00	
Flpb, ped/bikes					1.00		1.00	1.00			1.00	
Frt					0.95		1.00	1.00			0.96	
Flt Protected					0.99		0.95	1.00			1.00	
Satd. Flow (prot)					3385		1805	3610			3479	
Flt Permitted					0.99		0.95	1.00			1.00	
Satd. Flow (perm)					3385		1805	3610			3479	
Peak-hour factor, PHF	0.97	0.97	0.97	0.97	0.97	0.97	0.97	0.97	0.97	0.97	0.97	0.97
Adj. Flow (vph)	0	0	0	195	444	291	478	1888	0	0	1574	500
RTOR Reduction (vph)	0	0	0	0	18	0	0	0	0	0	30	0
Lane Group Flow (vph)	0	0	0	0	912	0	478	1888	0	0	2044	0
Confl. Peds. (#/hr)						5						
Heavy Vehicles (%)	0%	0%	0%	0%	0%	0%	0%	0%	0%	0%	0%	0%
Turn Type				Split			Prot					
Protected Phases				4	4		1	6			2	
Permitted Phases												
Actuated Green, G (s)					23.0		27.5	67.0			35.5	
Effective Green, g (s)					23.0		27.5	67.0			35.5	
Actuated g/C Ratio					0.23		0.28	0.67			0.36	
Clearance Time (s)					5.0		4.0	5.0			5.0	
Vehicle Extension (s)					2.0		2.0	2.0			2.0	
Lane Grp Cap (vph)					779		496	2419			1235	
v/s Ratio Prot					c0.27		c0.26	0.52			c0.59	
v/s Ratio Perm												
v/c Ratio					1.17		0.96	0.78			1.65	
Uniform Delay, d1					38.5		35.8	11.4			32.2	
Progression Factor					1.00		0.78	1.78			1.00	
Incremental Delay, d2					90.1		5.9	0.2			298.3	
Delay (s)					128.6		33.9	20.5			330.6	
Level of Service					F		C	C			F	
Approach Delay (s)		0.0			128.6			23.2			330.6	
Approach LOS		A			F			C			F	

Intersection Summary			
HCM Average Control Delay	160.2	HCM Level of Service	F
HCM Volume to Capacity ratio	1.30		
Actuated Cycle Length (s)	100.0	Sum of lost time (s)	14.0
Intersection Capacity Utilization	121.7%	ICU Level of Service	H
Analysis Period (min)	15		
c Critical Lane Group			

Movement	EBL	EBT	EBR	WBL	WBT	WBR	NBL	NBT	NBR	SBL	SBT	SBR
Lane Configurations												
Volume (vph)	631	77	506	0	0	0	0	1664	332	371	1345	0
Ideal Flow (vphpl)	1900	1900	1900	1900	1900	1900	1900	1900	1900	1900	1900	1900
Total Lost time (s)		5.0						5.0	5.0	4.0	5.0	
Lane Util. Factor		0.95						0.95	1.00	1.00	0.95	
Frpb, ped/bikes		1.00						1.00	0.98	1.00	1.00	
Flpb, ped/bikes		1.00						1.00	1.00	1.00	1.00	
Frt		0.94						1.00	0.85	1.00	1.00	
Flt Protected		0.97						1.00	1.00	0.95	1.00	
Satd. Flow (prot)		3299						3610	1581	1805	3610	
Flt Permitted		0.97						1.00	1.00	0.95	1.00	
Satd. Flow (perm)		3299						3610	1581	1805	3610	
Peak-hour factor, PHF	0.99	0.99	0.99	0.99	0.99	0.99	0.99	0.99	0.99	0.99	0.99	0.99
Adj. Flow (vph)	637	78	511	0	0	0	0	1681	335	375	1359	0
RTOR Reduction (vph)	0	39	0	0	0	0	0	0	150	0	0	0
Lane Group Flow (vph)	0	1187	0	0	0	0	0	1681	185	375	1359	0
Confl. Peds. (#/hr)									5			
Heavy Vehicles (%)	0%	0%	0%	0%	0%	0%	0%	0%	0%	0%	0%	0%
Turn Type	Split								Perm	Prot		
Protected Phases	8	8						6		5	2	
Permitted Phases									6			
Actuated Green, G (s)		29.0						41.0	41.0	16.0	61.0	
Effective Green, g (s)		29.0						41.0	41.0	16.0	61.0	
Actuated g/C Ratio		0.29						0.41	0.41	0.16	0.61	
Clearance Time (s)		5.0						5.0	5.0	4.0	5.0	
Vehicle Extension (s)		2.0						2.0	2.0	2.0	2.0	
Lane Grp Cap (vph)		957						1480	648	289	2202	
v/s Ratio Prot		c0.36						c0.47		c0.21	0.38	
v/s Ratio Perm									0.12			
v/c Ratio		1.24						1.14	0.29	1.30	0.62	
Uniform Delay, d1		35.5						29.5	19.7	42.0	12.2	
Progression Factor		1.00						1.00	1.00	0.75	0.69	
Incremental Delay, d2		117.1						70.0	1.1	136.3	0.1	
Delay (s)		152.6						99.5	20.8	167.9	8.5	
Level of Service		F						F	C	F	A	
Approach Delay (s)		152.6			0.0			86.4			43.0	
Approach LOS		F			A			F			D	

Intersection Summary			
HCM Average Control Delay	87.6	HCM Level of Service	F
HCM Volume to Capacity ratio	1.20		
Actuated Cycle Length (s)	100.0	Sum of lost time (s)	14.0
Intersection Capacity Utilization	121.7%	ICU Level of Service	H
Analysis Period (min)	15		
c Critical Lane Group			

UNIVERISTY CROSSINGS APARTMENTS TRAFFIC IMPACT ANALYSIS (JN 08139)
2035 With Project Conditions
PM PEAK HOUR

Level Of Service Computation Report
2000 HCM Operations Method (Future Volume Alternative)

Intersection #8 Alabama Street / Redlands Boulevard

Cycle (sec): 120 Critical Vol./Cap.(X): 1.262
Loss Time (sec): 8 Average Delay (sec/veh): 125.4
Optimal Cycle: OPTIMIZED Level Of Service: F

Approach:	North Bound			South Bound			East Bound			West Bound		
Movement:	L - T - R			L - T - R			L - T - R			L - T - R		
Control:	Split Phase			Split Phase			Protected			Protected		
Rights:	Include			Include			Include			Include		
Min. Green:	25	25	25	25	25	25	10	23	23	10	23	23
Y+R:	4.0	4.0	4.0	4.0	4.0	4.0	4.0	4.0	4.0	4.0	4.0	4.0
Lanes:	1 0	1	1 0	1 0	1	1 0	1 0	2	0 1	1 0	2	0 1
Volume Module:												
Base Vol:	169	903	194	360	867	351	441	673	137	175	452	360
Growth Adj:	1.00	1.00	1.00	1.00	1.00	1.00	1.00	1.00	1.00	1.00	1.00	1.00
Initial Bse:	169	903	194	360	867	351	441	673	137	175	452	360
Added Vol:	0	6	0	4	4	0	0	0	0	0	0	6
PasserByVol:	0	0	0	0	0	0	0	0	0	0	0	0
Initial Fut:	169	909	194	364	871	351	441	673	137	175	452	366
User Adj:	1.00	1.00	1.00	1.00	1.00	1.00	1.00	1.00	1.00	1.00	1.00	1.00
PHF Adj:	0.95	0.95	0.95	0.95	0.95	0.95	0.95	0.95	0.95	0.95	0.95	0.95
PHF Volume:	178	957	204	383	917	369	464	708	144	184	476	385
Reduct Vol:	0	0	0	0	0	0	0	0	0	0	0	0
Reduced Vol:	178	957	204	383	917	369	464	708	144	184	476	385
PCE Adj:	1.00	1.00	1.00	1.00	1.00	1.00	1.00	1.00	1.00	1.00	1.00	1.00
MLF Adj:	1.00	1.00	1.00	1.00	1.00	1.00	1.00	1.00	1.00	1.00	1.00	1.00
FinalVolume:	178	957	204	383	917	369	464	708	144	184	476	385
Saturation Flow Module:												
Sat/Lane:	1900	1900	1900	1900	1900	1900	1900	1900	1900	1900	1900	1900
Adjustment:	0.90	0.97	0.97	0.90	0.96	0.96	0.90	1.00	0.85	0.90	1.00	0.85
Lanes:	1.00	1.65	0.35	1.00	1.43	0.57	1.00	2.00	1.00	1.00	2.00	1.00
Final Sat.:	1710	3050	651	1710	2592	1045	1710	3800	1615	1710	3800	1615
Capacity Analysis Module:												
Vol/Sat:	0.10	0.31	0.31	0.22	0.35	0.35	0.27	0.19	0.09	0.11	0.13	0.24
Crit Moves:			****		****		****					****
Green/Cycle:	0.25	0.25	0.25	0.28	0.28	0.28	0.21	0.26	0.26	0.15	0.19	0.19
Volume/Cap:	0.42	1.27	1.27	0.80	1.27	1.27	1.27	0.72	0.34	0.74	0.65	1.24
Delay/Veh:	38.6	173	173.5	49.6	171	170.8	186.8	42.9	36.6	60.0	47.0	182.8
User DelAdj:	1.00	1.00	1.00	1.00	1.00	1.00	1.00	1.00	1.00	1.00	1.00	1.00
AdjDel/Veh:	38.6	173	173.5	49.6	171	170.8	186.8	42.9	36.6	60.0	47.0	182.8
LOS by Move:	D	F	F	D	F	F	F	D	D	E	D	F
HCM2kAvgQ:	6	38	38	16	42	42	33	13	4	8	9	26

Note: Queue reported is the number of cars per lane.

Traffix 8.0.0715 (c) 2008 Dowling Assoc. Licensed to URBAN CROSSROADS, IRVINE

APPENDIX 7.3

Horizon Year (2035) With Project Conditions
Traffic Signal Warrant Analysis Worksheets

Figure 4C-103 (CA). Traffic Signal Warrants Worksheet
(Average Traffic Estimate Form)

___	___	___	___		TRAFFIC CONDITIONS		**2035 WP**
DIST	CO	RTE	PM	CALC	CH	DATE	02/24/12
Jurisdiction:	**County of San Bernardino**			CHK	CH	DATE	02/24/12
Major Street:	**Lugonia Avenue**				Critical Approach Speed (Major)		45
Minor Street:	**Driveway 2**				Critical Approach Speed (Minor)		25

Major Street Approach Lanes = **2** Minor Street Approach Lanes **1**

Major Street Future ADT = **14,600** Minor Street Future ADT = **950**

Speed limit or critical speed on major street traffic > 64 km/h (40 mph); ……... [√]

or **RURAL (R)**

In built up area of isolated community of < 10,000 population …….. [ ]

(Based on Estimated Average Daily Traffic - See Note)

URBAN	RURAL	Minimum Requirements EADT			
	XX				
CONDITION A - Minimum Vehicular Volume					
Satisfied	Not Satisfied	Vehicles Per Day on Major Street (Total of Both Approaches)		Vehicles Per Day on Higher-Volume Minor Street Approach (One Direction Only)	
	XX				
Number of lanes for moving traffic on each approach					
Major Street	Minor Street	Urban	Rural	Urban	Rural
1	*1*	8,000	5,600	2,400	1,680
2 + **14,600**	*1* **950**	9,600	6,720 *	2,400	1,680
2 +	*2 +*	9,600	6,720	3,200	2,240
1	*2 +*	8,000	5,600	3,200	2,240
CONDITION B - Interruption of Continuous Traffic					
Satisfied	Not Satisfied	Vehicles Per Day on Major Street (Total of Both Approaches)		Vehicles Per Day on Higher-Volume Minor Street Approach (One Direction Only)	
	XX				
Number of lanes for moving traffic on each approach					
Major Street	Minor Street	Urban	Rural	Urban	Rural
1	*1*	12,000	8,400	1,200	850
2 +	*1* **950**	14,400	10,080	1,200	850 *
2 +	*2 +*	14,400	10,080	1,600	1,120
1	*2 +*	12,000	8,400	1,600	1,120
Combination of CONDITIONS A + B					
Satisfied	Not Satisfied	2 CONDITIONS 80%		2 CONDITIONS 80%	
	XX				
No one condition satisfied, but following conditions fulfilled 80% of more …..	**A** 57% / **B** 100%				

Note: To be used only for NEW INTERSECTIONS or other locations where it is not reasonable to count actual traffic volumes.

The satisfaction of a traffic signal warrant or warrants shall not in itself require the installation of a traffic control signal.

This Page Intentionally Left Blank

APPENDIX 7.4

Horizon Year (2035) With Project Conditions
Intersection Operations Analysis Worksheets, with Improvements

UNIVERISTY CROSSINGS APARTMENTS TRAFFIC IMPACT ANALYSIS (JN 08139)
2035 With Project Conditions WITH IMPROVEMENTS
AM PEAK HOUR

Level Of Service Computation Report
2000 HCM Operations Method (Future Volume Alternative)

Intersection #1 California Street / Lugonia Avenue

Cycle (sec): 95 Critical Vol./Cap.(X): 0.419
Loss Time (sec): 8 Average Delay (sec/veh): 20.2
Optimal Cycle: OPTIMIZED Level Of Service: C

Approach:	North Bound			South Bound			East Bound			West Bound		
Movement:	L - T - R			L - T - R			L - T - R			L - T - R		
Control:	Permitted			Permitted			Protected			Protected		
Rights:	Include			Include			Include			Include		
Min. Green:	10	10	10	28	28	28	10	30	30	10	10	10
Y+R:	4.0	4.0	4.0	4.0	4.0	4.0	4.0	4.0	4.0	4.0	4.0	4.0
Lanes:	1 0	1 0	1	1 0	2 0	1	1 0	1 0	1	1 0	0 1	0
Volume Module:												
Base Vol:	230	523	192	22	383	11	10	29	52	78	128	57
Growth Adj:	1.00	1.00	1.00	1.00	1.00	1.00	1.00	1.00	1.00	1.00	1.00	1.00
Initial Bse:	230	523	192	22	383	11	10	29	52	78	128	57
Added Vol:	0	0	5	2	0	0	0	3	0	20	13	7
PasserByVol:	0	0	0	0	0	0	0	0	0	0	0	0
Initial Fut:	230	523	197	24	383	11	10	32	52	98	141	64
User Adj:	1.00	1.00	1.00	1.00	1.00	1.00	1.00	1.00	1.00	1.00	1.00	1.00
PHF Adj:	0.95	0.95	0.95	0.95	0.95	0.95	0.95	0.95	0.95	0.95	0.95	0.95
PHF Volume:	242	551	207	25	403	12	11	34	55	103	148	67
Reduct Vol:	0	0	0	0	0	0	0	0	0	0	0	0
Reduced Vol:	242	551	207	25	403	12	11	34	55	103	148	67
PCE Adj:	1.00	1.00	1.00	1.00	1.00	1.00	1.00	1.00	1.00	1.00	1.00	1.00
MLF Adj:	1.00	1.00	1.00	1.00	1.00	1.00	1.00	1.00	1.00	1.00	1.00	1.00
FinalVolume:	242	551	207	25	403	12	11	34	55	103	148	67
Saturation Flow Module:												
Sat/Lane:	1900	1900	1900	1900	1900	1900	1900	1900	1900	1900	1900	1900
Adjustment:	0.46	1.00	0.85	0.26	1.00	0.85	0.90	1.00	0.85	0.90	0.95	0.95
Lanes:	1.00	1.00	1.00	1.00	2.00	1.00	1.00	1.00	1.00	1.00	0.69	0.31
Final Sat.:	877	1900	1615	495	3800	1615	1710	1900	1615	1710	1245	565
Capacity Analysis Module:												
Vol/Sat:	0.28	0.29	0.13	0.05	0.11	0.01	0.01	0.02	0.03	0.06	0.12	0.12
Crit Moves:		****							****	****		
Green/Cycle:	0.49	0.49	0.49	0.49	0.49	0.49	0.20	0.32	0.32	0.11	0.22	0.22
Volume/Cap:	0.56	0.59	0.26	0.10	0.21	0.01	0.03	0.06	0.11	0.57	0.53	0.53
Delay/Veh:	18.4	18.0	14.1	13.0	13.6	12.2	30.8	22.7	23.1	44.9	33.9	33.9
User DelAdj:	1.00	1.00	1.00	1.00	1.00	1.00	1.00	1.00	1.00	1.00	1.00	1.00
AdjDel/Veh:	18.4	18.0	14.1	13.0	13.6	12.2	30.8	22.7	23.1	44.9	33.9	33.9
LOS by Move:	B	B	B	B	B	B	C	C	C	D	C	C
HCM2kAvgQ:	6	12	4	0	3	0	0	1	1	4	6	6

Note: Queue reported is the number of cars per lane.

Traffix 8.0.0715 (c) 2008 Dowling Assoc. Licensed to URBAN CROSSROADS, IRVINE

UNIVERISTY CROSSINGS APARTMENTS TRAFFIC IMPACT ANALYSIS (JN 08139)
2035 With Project Conditions WITH IMPROVEMENTS
AM PEAK HOUR

Level Of Service Computation Report
2000 HCM Operations Method (Future Volume Alternative)

Intersection #2 Nevada Street / Lugonia Avenue

Cycle (sec): 70 Critical Vol./Cap.(X): 0.296
Loss Time (sec): 8 Average Delay (sec/veh): 21.3
Optimal Cycle: OPTIMIZED Level Of Service: C

Approach:	North Bound			South Bound			East Bound			West Bound		
Movement:	L - T - R			L - T - R			L - T - R			L - T - R		
Control:	Protected			Protected			Protected			Protected		
Rights:	Include			Include			Include			Include		
Min. Green:	10	21	21	10	21	21	10	16	16	10	16	16
Y+R:	4.0	4.0	4.0	4.0	4.0	4.0	4.0	4.0	4.0	4.0	4.0	4.0
Lanes:	1 0 1	0 1		1 0	0 1	0	1 0	1 1	0	1 0	1 1	0
Volume Module:												
Base Vol:	42	111	40	17	153	16	16	73	43	150	188	27
Growth Adj:	1.00	1.00	1.00	1.00	1.00	1.00	1.00	1.00	1.00	1.00	1.00	1.00
Initial Bse:	42	111	40	17	153	16	16	73	43	150	188	27
Added Vol:	0	0	5	2	0	0	0	10	0	20	40	7
PasserByVol:	0	0	0	0	0	0	0	0	0	0	0	0
Initial Fut:	42	111	45	19	153	16	16	83	43	170	228	34
User Adj:	1.00	1.00	1.00	1.00	1.00	1.00	1.00	1.00	1.00	1.00	1.00	1.00
PHF Adj:	0.95	0.95	0.95	0.95	0.95	0.95	0.95	0.95	0.95	0.95	0.95	0.95
PHF Volume:	44	117	47	20	161	17	17	87	45	179	240	36
Reduct Vol:	0	0	0	0	0	0	0	0	0	0	0	0
Reduced Vol:	44	117	47	20	161	17	17	87	45	179	240	36
PCE Adj:	1.00	1.00	1.00	1.00	1.00	1.00	1.00	1.00	1.00	1.00	1.00	1.00
MLF Adj:	1.00	1.00	1.00	1.00	1.00	1.00	1.00	1.00	1.00	1.00	1.00	1.00
FinalVolume:	44	117	47	20	161	17	17	87	45	179	240	36
Saturation Flow Module:												
Sat/Lane:	1900	1900	1900	1900	1900	1900	1900	1900	1900	1900	1900	1900
Adjustment:	0.90	1.00	0.85	0.90	0.99	0.99	0.90	0.95	0.95	0.90	0.98	0.98
Lanes:	1.00	1.00	1.00	1.00	0.91	0.09	1.00	1.32	0.68	1.00	1.74	0.26
Final Sat.:	1710	1900	1615	1710	1696	177	1710	2376	1231	1710	3244	484
Capacity Analysis Module:												
Vol/Sat:	0.03	0.06	0.03	0.01	0.09	0.09	0.01	0.04	0.04	0.10	0.07	0.07
Crit Moves:	****				****			****		****		
Green/Cycle:	0.14	0.30	0.30	0.14	0.30	0.30	0.17	0.23	0.23	0.21	0.27	0.27
Volume/Cap:	0.18	0.20	0.10	0.08	0.32	0.32	0.06	0.16	0.16	0.49	0.27	0.27
Delay/Veh:	26.8	18.5	17.8	26.2	19.3	19.3	24.4	21.7	21.7	25.2	20.1	20.1
User DelAdj:	1.00	1.00	1.00	1.00	1.00	1.00	1.00	1.00	1.00	1.00	1.00	1.00
AdjDel/Veh:	26.8	18.5	17.8	26.2	19.3	19.3	24.4	21.7	21.7	25.2	20.1	20.1
LOS by Move:	C	B	B	C	B	B	C	C	C	C	C	C
HCM2kAvgQ:	1	2	1	0	3	3	0	1	1	4	2	2

Note: Queue reported is the number of cars per lane.

Traffix 8.0.0715 (c) 2008 Dowling Assoc. Licensed to URBAN CROSSROADS, IRVINE

UNIVERISTY CROSSINGS APARTMENTS TRAFFIC IMPACT ANALYSIS (JN 08139)
2035 With Project Conditions WITH IMPROVEMENTS
AM PEAK HOUR

Level Of Service Computation Report
2000 HCM Operations Method (Future Volume Alternative)

Intersection #5 Alabama Street / Lugonia Avenue

Cycle (sec): 70 Critical Vol./Cap.(X): 0.327
Loss Time (sec): 8 Average Delay (sec/veh): 21.7
Optimal Cycle: OPTIMIZED Level Of Service: C

Approach:	North Bound			South Bound			East Bound			West Bound		
Movement:	L - T	- R		L - T	- R		L - T	- R		L - T	- R	
Control:	Protected			Protected			Protected			Protected		
Rights:	Ovl			Include			Include			Include		
Min. Green:	10	20	20	10	20	20	10	24	24	10	24	24
Y+R:	4.0	4.0	4.0	4.0	4.0	4.0	4.0	4.0	4.0	4.0	4.0	4.0
Lanes:	2 0	3 0	1	2 0	3 0	1	2 0	1 1	0	2 0	2 0	1
Volume Module:												
Base Vol:	153	756	172	88	625	160	60	101	48	204	267	99
Growth Adj:	1.00	1.00	1.00	1.00	1.00	1.00	1.00	1.00	1.00	1.00	1.00	1.00
Initial Bse:	153	756	172	88	625	160	60	101	48	204	267	99
Added Vol:	6	0	0	0	0	5	20	20	26	0	5	0
PasserByVol:	0	0	0	0	0	0	0	0	0	0	0	0
Initial Fut:	159	756	172	88	625	165	80	121	74	204	272	99
User Adj:	1.00	1.00	1.00	1.00	1.00	1.00	1.00	1.00	1.00	1.00	1.00	1.00
PHF Adj:	0.95	0.95	0.95	0.95	0.95	0.95	0.95	0.95	0.95	0.95	0.95	0.95
PHF Volume:	167	796	181	93	658	174	84	127	78	215	286	104
Reduct Vol:	0	0	0	0	0	0	0	0	0	0	0	0
Reduced Vol:	167	796	181	93	658	174	84	127	78	215	286	104
PCE Adj:	1.00	1.00	1.00	1.00	1.00	1.00	1.00	1.00	1.00	1.00	1.00	1.00
MLF Adj:	1.00	1.00	1.00	1.00	1.00	1.00	1.00	1.00	1.00	1.00	1.00	1.00
FinalVolume:	167	796	181	93	658	174	84	127	78	215	286	104
Saturation Flow Module:												
Sat/Lane:	1900	1900	1900	1900	1900	1900	1900	1900	1900	1900	1900	1900
Adjustment:	0.85	1.00	0.85	0.85	1.00	0.85	0.85	0.94	0.94	0.85	1.00	0.85
Lanes:	2.00	3.00	1.00	2.00	3.00	1.00	2.00	1.24	0.76	2.00	2.00	1.00
Final Sat.:	3230	5700	1615	3230	5700	1615	3230	2224	1360	3230	3800	1615
Capacity Analysis Module:												
Vol/Sat:	0.05	0.14	0.11	0.03	0.12	0.11	0.03	0.06	0.06	0.07	0.08	0.06
Crit Moves:	****				****			****		****		
Green/Cycle:	0.14	0.28	0.42	0.14	0.28	0.28	0.14	0.33	0.33	0.14	0.33	0.33
Volume/Cap:	0.37	0.50	0.27	0.21	0.42	0.39	0.19	0.17	0.17	0.48	0.23	0.19
Delay/Veh:	28.7	22.1	14.0	27.7	21.4	21.6	27.6	17.0	17.0	29.4	17.4	17.3
User DelAdj:	1.00	1.00	1.00	1.00	1.00	1.00	1.00	1.00	1.00	1.00	1.00	1.00
AdjDel/Veh:	28.7	22.1	14.0	27.7	21.4	21.6	27.6	17.0	17.0	29.4	17.4	17.3
LOS by Move:	C	C	B	C	C	C	C	B	B	C	B	B
HCM2kAvgQ:	2	5	3	1	4	3	1	2	2	3	2	2

Note: Queue reported is the number of cars per lane.

Traffix 8.0.0715 (c) 2008 Dowling Assoc. Licensed to URBAN CROSSROADS, IRVINE

Movement	EBL	EBT	EBR	WBL	WBT	WBR	NBL	NBT	NBR	SBL	SBT	SBR
Lane Configurations												
Volume (vph)	0	0	0	485	352	511	393	835	0	0	533	218
Ideal Flow (vphpl)	1900	1900	1900	1900	1900	1900	1900	1900	1900	1900	1900	1900
Total Lost time (s)					5.0		4.0	5.0			5.0	5.0
Lane Util. Factor					0.95		0.97	0.91			0.91	1.00
Frpb, ped/bikes					0.99		1.00	1.00			1.00	1.00
Flpb, ped/bikes					1.00		1.00	1.00			1.00	1.00
Frt					0.94		1.00	1.00			1.00	0.85
Flt Protected					0.98		0.95	1.00			1.00	1.00
Satd. Flow (prot)					3326		3502	5187			5187	1615
Flt Permitted					0.98		0.95	1.00			1.00	1.00
Satd. Flow (perm)					3326		3502	5187			5187	1615
Peak-hour factor, PHF	0.95	0.95	0.95	0.95	0.95	0.95	0.95	0.95	0.95	0.95	0.95	0.95
Adj. Flow (vph)	0	0	0	511	371	538	414	879	0	0	561	229
RTOR Reduction (vph)	0	0	0	0	28	0	0	0	0	0	0	172
Lane Group Flow (vph)	0	0	0	0	1392	0	414	879	0	0	561	57
Confl. Peds. (#/hr)						5						
Heavy Vehicles (%)	0%	0%	0%	0%	0%	0%	0%	0%	0%	0%	0%	0%
Turn Type				Split			Prot					Perm
Protected Phases				4	4		1	6			2	
Permitted Phases												2
Actuated Green, G (s)					58.2		18.0	51.8			29.8	29.8
Effective Green, g (s)					58.2		18.0	51.8			29.8	29.8
Actuated g/C Ratio					0.49		0.15	0.43			0.25	0.25
Clearance Time (s)					5.0		4.0	5.0			5.0	5.0
Vehicle Extension (s)					2.0		2.0	2.0			2.0	2.0
Lane Grp Cap (vph)					1613		525	2239			1288	401
v/s Ratio Prot					c0.42		c0.12	0.17			c0.11	
v/s Ratio Perm												0.04
v/c Ratio					0.86		0.79	0.39			0.44	0.14
Uniform Delay, d1					27.4		49.2	23.3			38.0	35.1
Progression Factor					1.00		0.67	0.64			1.00	1.00
Incremental Delay, d2					4.9		6.8	0.5			1.1	0.7
Delay (s)					32.2		39.8	15.5			39.1	35.9
Level of Service					C		D	B			D	D
Approach Delay (s)		0.0			32.2			23.2			38.2	
Approach LOS		A			C			C			D	

Intersection Summary			
HCM Average Control Delay	30.3	HCM Level of Service	C
HCM Volume to Capacity ratio	0.73		
Actuated Cycle Length (s)	120.0	Sum of lost time (s)	14.0
Intersection Capacity Utilization	76.8%	ICU Level of Service	D
Analysis Period (min)	15		
c Critical Lane Group			

Movement	EBL	EBT	EBR	WBL	WBT	WBR	NBL	NBT	NBR	SBL	SBT	SBR
Lane Configurations												
Volume (vph)	320	44	479	0	0	0	0	907	141	202	817	0
Ideal Flow (vphpl)	1900	1900	1900	1900	1900	1900	1900	1900	1900	1900	1900	1900
Total Lost time (s)	5.0	5.0	5.0					5.0	5.0	4.0	5.0	
Lane Util. Factor	0.95	0.95	1.00					0.91	1.00	0.97	0.91	
Frpb, ped/bikes	1.00	1.00	1.00					1.00	0.98	1.00	1.00	
Flpb, ped/bikes	1.00	1.00	1.00					1.00	1.00	1.00	1.00	
Frt	1.00	1.00	0.85					1.00	0.85	1.00	1.00	
Flt Protected	0.95	0.96	1.00					1.00	1.00	0.95	1.00	
Satd. Flow (prot)	1715	1739	1615					5187	1578	3502	5187	
Flt Permitted	0.95	0.96	1.00					1.00	1.00	0.95	1.00	
Satd. Flow (perm)	1715	1739	1615					5187	1578	3502	5187	
Peak-hour factor, PHF	0.95	0.95	0.95	0.95	0.95	0.95	0.95	0.95	0.95	0.95	0.95	0.95
Adj. Flow (vph)	337	46	504	0	0	0	0	955	148	213	860	0
RTOR Reduction (vph)	0	0	57	0	0	0	0	0	84	0	0	0
Lane Group Flow (vph)	189	194	447	0	0	0	0	955	64	213	860	0
Confl. Peds. (#/hr)									5			
Heavy Vehicles (%)	0%	0%	0%	0%	0%	0%	0%	0%	0%	0%	0%	0%
Turn Type	Split		Perm						Perm	Prot		
Protected Phases	8	8						6		5	2	
Permitted Phases			8						6			
Actuated Green, G (s)	39.8	39.8	39.8					52.2	52.2	14.0	70.2	
Effective Green, g (s)	39.8	39.8	39.8					52.2	52.2	14.0	70.2	
Actuated g/C Ratio	0.33	0.33	0.33					0.44	0.44	0.12	0.59	
Clearance Time (s)	5.0	5.0	5.0					5.0	5.0	4.0	5.0	
Vehicle Extension (s)	2.0	2.0	2.0					2.0	2.0	2.0	2.0	
Lane Grp Cap (vph)	569	577	536					2256	686	409	3034	
v/s Ratio Prot	0.11	0.11						c0.18		c0.06	0.17	
v/s Ratio Perm			c0.28						0.04			
v/c Ratio	0.33	0.34	0.83					0.42	0.09	0.52	0.28	
Uniform Delay, d1	30.1	30.2	37.0					23.5	20.0	49.8	12.4	
Progression Factor	1.00	1.00	1.00					1.00	1.00	0.85	0.85	
Incremental Delay, d2	0.1	0.1	10.2					0.6	0.3	0.4	0.2	
Delay (s)	30.2	30.3	47.3					24.1	20.2	42.6	10.7	
Level of Service	C	C	D					C	C	D	B	
Approach Delay (s)		39.9			0.0			23.5			17.1	
Approach LOS		D			A			C			B	

Intersection Summary			
HCM Average Control Delay	26.0	HCM Level of Service	C
HCM Volume to Capacity ratio	0.59		
Actuated Cycle Length (s)	120.0	Sum of lost time (s)	14.0
Intersection Capacity Utilization	76.8%	ICU Level of Service	D
Analysis Period (min)	15		
c Critical Lane Group			

UNIVERISTY CROSSINGS APARTMENTS TRAFFIC IMPACT ANALYSIS (JN 08139)
2035 With Project Conditions WITH IMPROVEMENTS
AM PEAK HOUR

Level Of Service Computation Report
2000 HCM Operations Method (Future Volume Alternative)

Intersection #8 Alabama Street / Redlands Boulevard

Cycle (sec): 75 Critical Vol./Cap.(X): 0.592
Loss Time (sec): 8 Average Delay (sec/veh): 25.0
Optimal Cycle: OPTIMIZED Level Of Service: C

Approach:	North Bound				South Bound				East Bound				West Bound			
Movement:	L	- T	- R		L	- T	- R		L	- T	- R		L	- T	- R	
Control:	Protected				Protected				Protected				Protected			
Rights:	Include				Include				Include				Include			
Min. Green:	10	25	25		10	25	25		10	23	23		10	23	23	
Y+R:	4.0	4.0	4.0		4.0	4.0	4.0		4.0	4.0	4.0		4.0	4.0	4.0	
Lanes:	2	0 2	1	0	2	0 2	0	1	2	0 1	1	0	2	0 1	1	0
Volume Module:																
Base Vol:	94	650	75		225	685	232		185	223	42		130	524	316	
Growth Adj:	1.00	1.00	1.00		1.00	1.00	1.00		1.00	1.00	1.00		1.00	1.00	1.00	
Initial Bse:	94	650	75		225	685	232		185	223	42		130	524	316	
Added Vol:	0	2	0		7	7	0		0	0	0		0	0	2	
PasserByVol:	0	0	0		0	0	0		0	0	0		0	0	0	
Initial Fut:	94	652	75		232	692	232		185	223	42		130	524	318	
User Adj:	1.00	1.00	1.00		1.00	1.00	1.00		1.00	1.00	1.00		1.00	1.00	1.00	
PHF Adj:	0.95	0.95	0.95		0.95	0.95	0.95		0.95	0.95	0.95		0.95	0.95	0.95	
PHF Volume:	99	686	79		244	728	244		195	235	44		137	552	335	
Reduct Vol:	0	0	0		0	0	0		0	0	0		0	0	0	
Reduced Vol:	99	686	79		244	728	244		195	235	44		137	552	335	
PCE Adj:	1.00	1.00	1.00		1.00	1.00	1.00		1.00	1.00	1.00		1.00	1.00	1.00	
MLF Adj:	1.00	1.00	1.00		1.00	1.00	1.00		1.00	1.00	1.00		1.00	1.00	1.00	
FinalVolume:	99	686	79		244	728	244		195	235	44		137	552	335	
Saturation Flow Module:																
Sat/Lane:	1900	1900	1900		1900	1900	1900		1900	1900	1900		1900	1900	1900	
Adjustment:	0.85	0.99	0.99		0.85	1.00	0.85		0.85	0.98	0.98		0.85	0.94	0.94	
Lanes:	2.00	2.69	0.31		2.00	2.00	1.00		2.00	1.68	0.32		2.00	1.24	0.76	
Final Sat.:	3230	5035	579		3230	3800	1615		3230	3121	588		3230	2230	1353	
Capacity Analysis Module:																
Vol/Sat:	0.03	0.14	0.14		0.08	0.19	0.15		0.06	0.08	0.08		0.04	0.25	0.25	
Crit Moves:	****					****			****					****		
Green/Cycle:	0.13	0.33	0.33		0.13	0.33	0.33		0.13	0.30	0.30		0.13	0.30	0.30	
Volume/Cap:	0.23	0.41	0.41		0.57	0.58	0.46		0.46	0.25	0.25		0.32	0.82	0.82	
Delay/Veh:	29.8	20.0	20.0		32.9	21.9	20.8		31.3	20.1	20.1		30.4	29.5	29.5	
User DelAdj:	1.00	1.00	1.00		1.00	1.00	1.00		1.00	1.00	1.00		1.00	1.00	1.00	
AdjDel/Veh:	29.8	20.0	20.0		32.9	21.9	20.8		31.3	20.1	20.1		30.4	29.5	29.5	
LOS by Move:	C	B	B		C	C	C		C	C	C		C	C	C	
HCM2kAvgQ:	1	5	5		4	8	5		3	3	3		2	12	12	

Note: Queue reported is the number of cars per lane.

Traffix 8.0.0715 (c) 2008 Dowling Assoc. Licensed to URBAN CROSSROADS, IRVINE

UNIVERISTY CROSSINGS APARTMENTS TRAFFIC IMPACT ANALYSIS (JN 08139)
2035 With Project Conditions WITH IMPROVEMENTS
PM PEAK HOUR

Level Of Service Computation Report
2000 HCM Operations Method (Future Volume Alternative)

****

Intersection #1 California Street / Lugonia Avenue

****

Cycle (sec): 95 Critical Vol./Cap.(X): 0.760
Loss Time (sec): 8 Average Delay (sec/veh): 29.7
Optimal Cycle: OPTIMIZED Level Of Service: C

****

Approach:	North Bound			South Bound			East Bound			West Bound		
Movement:	L - T - R			L - T - R			L - T - R			L - T - R		
Control:	Permitted			Permitted			Protected			Protected		
Rights:	Include			Include			Include			Include		
Min. Green:	10	10	10	28	28	28	10	30	30	10	10	10
Y+R:	4.0	4.0	4.0	4.0	4.0	4.0	4.0	4.0	4.0	4.0	4.0	4.0
Lanes:	1 0 1	0 1		1 0 2	0 1		1 0 1	0 1		1 0 0	1 0	
Volume Module:												
Base Vol:	86	600	250	71	748	10	13	109	310	252	69	83
Growth Adj:	1.00	1.00	1.00	1.00	1.00	1.00	1.00	1.00	1.00	1.00	1.00	1.00
Initial Bse:	86	600	250	71	748	10	13	109	310	252	69	83
Added Vol:	0	0	19	6	0	0	0	13	0	11	7	4
PasserByVol:	0	0	0	0	0	0	0	0	0	0	0	0
Initial Fut:	86	600	269	77	748	10	13	122	310	263	76	87
User Adj:	1.00	1.00	1.00	1.00	1.00	1.00	1.00	1.00	1.00	1.00	1.00	1.00
PHF Adj:	0.95	0.95	0.95	0.95	0.95	0.95	0.95	0.95	0.95	0.95	0.95	0.95
PHF Volume:	91	632	283	81	787	11	14	128	326	277	80	92
Reduct Vol:	0	0	0	0	0	0	0	0	0	0	0	0
Reduced Vol:	91	632	283	81	787	11	14	128	326	277	80	92
PCE Adj:	1.00	1.00	1.00	1.00	1.00	1.00	1.00	1.00	1.00	1.00	1.00	1.00
MLF Adj:	1.00	1.00	1.00	1.00	1.00	1.00	1.00	1.00	1.00	1.00	1.00	1.00
FinalVolume:	91	632	283	81	787	11	14	128	326	277	80	92
Saturation Flow Module:												
Sat/Lane:	1900	1900	1900	1900	1900	1900	1900	1900	1900	1900	1900	1900
Adjustment:	0.24	1.00	0.85	0.13	1.00	0.85	0.90	1.00	0.85	0.90	0.92	0.92
Lanes:	1.00	1.00	1.00	1.00	2.00	1.00	1.00	1.00	1.00	1.00	0.47	0.53
Final Sat.:	448	1900	1615	256	3800	1615	1710	1900	1615	1710	815	933
Capacity Analysis Module:												
Vol/Sat:	0.20	0.33	0.18	0.32	0.21	0.01	0.01	0.07	0.20	0.16	0.10	0.10
Crit Moves:		****							****	****		
Green/Cycle:	0.40	0.40	0.40	0.40	0.40	0.40	0.26	0.32	0.32	0.20	0.26	0.26
Volume/Cap:	0.50	0.82	0.43	0.79	0.51	0.02	0.03	0.21	0.64	0.82	0.38	0.38
Delay/Veh:	23.4	32.5	21.0	56.6	21.6	17.0	26.5	24.0	30.6	51.7	29.7	29.7
User DelAdj:	1.00	1.00	1.00	1.00	1.00	1.00	1.00	1.00	1.00	1.00	1.00	1.00
AdjDel/Veh:	23.4	32.5	21.0	56.6	21.6	17.0	26.5	24.0	30.6	51.7	29.7	29.7
LOS by Move:	C	C	C	E	C	B	C	C	C	D	C	C
HCM2kAvgQ:	3	19	6	4	9	0	0	3	9	11	4	4

****

Note: Queue reported is the number of cars per lane.

Traffix 8.0.0715 (c) 2008 Dowling Assoc. Licensed to URBAN CROSSROADS, IRVINE

UNIVERISTY CROSSINGS APARTMENTS TRAFFIC IMPACT ANALYSIS (JN 08139)
2035 With Project Conditions WITH IMPROVEMENTS
PM PEAK HOUR

Level Of Service Computation Report
2000 HCM Operations Method (Future Volume Alternative)

Intersection #2 Nevada Street / Lugonia Avenue

Cycle (sec): 65 Critical Vol./Cap.(X): 0.478
Loss Time (sec): 8 Average Delay (sec/veh): 21.0
Optimal Cycle: OPTIMIZED Level Of Service: C

Approach:	North Bound			South Bound			East Bound			West Bound		
Movement:	L - T - R			L - T - R			L - T - R			L - T - R		
Control:	Protected			Protected			Protected			Protected		
Rights:	Include			Include			Include			Include		
Min. Green:	10	21	21	10	21	21	10	16	16	10	16	16
Y+R:	4.0	4.0	4.0	4.0	4.0	4.0	4.0	4.0	4.0	4.0	4.0	4.0
Lanes:	1 0	1 0	1	1 0	0 1	0	1 0	1 1	0	1 0	1 1	0
Volume Module:												
Base Vol:	36	277	239	40	197	11	46	317	79	150	206	19
Growth Adj:	1.00	1.00	1.00	1.00	1.00	1.00	1.00	1.00	1.00	1.00	1.00	1.00
Initial Bse:	36	277	239	40	197	11	46	317	79	150	206	19
Added Vol:	0	0	19	6	0	0	0	38	0	11	21	4
PasserByVol:	0	0	0	0	0	0	0	0	0	0	0	0
Initial Fut:	36	277	258	46	197	11	46	355	79	161	227	23
User Adj:	1.00	1.00	1.00	1.00	1.00	1.00	1.00	1.00	1.00	1.00	1.00	1.00
PHF Adj:	0.95	0.95	0.95	0.95	0.95	0.95	0.95	0.95	0.95	0.95	0.95	0.95
PHF Volume:	38	292	272	48	207	12	48	374	83	169	239	24
Reduct Vol:	0	0	0	0	0	0	0	0	0	0	0	0
Reduced Vol:	38	292	272	48	207	12	48	374	83	169	239	24
PCE Adj:	1.00	1.00	1.00	1.00	1.00	1.00	1.00	1.00	1.00	1.00	1.00	1.00
MLF Adj:	1.00	1.00	1.00	1.00	1.00	1.00	1.00	1.00	1.00	1.00	1.00	1.00
FinalVolume:	38	292	272	48	207	12	48	374	83	169	239	24
Saturation Flow Module:												
Sat/Lane:	1900	1900	1900	1900	1900	1900	1900	1900	1900	1900	1900	1900
Adjustment:	0.90	1.00	0.85	0.90	0.99	0.99	0.90	0.97	0.97	0.90	0.99	0.99
Lanes:	1.00	1.00	1.00	1.00	0.95	0.05	1.00	1.64	0.36	1.00	1.82	0.18
Final Sat.:	1710	1900	1615	1710	1785	100	1710	3024	673	1710	3402	345
Capacity Analysis Module:												
Vol/Sat:	0.02	0.15	0.17	0.03	0.12	0.12	0.03	0.12	0.12	0.10	0.07	0.07
Crit Moves:			****	****				****		****		
Green/Cycle:	0.15	0.32	0.32	0.15	0.32	0.32	0.15	0.25	0.25	0.15	0.25	0.25
Volume/Cap:	0.14	0.48	0.52	0.18	0.36	0.36	0.18	0.50	0.50	0.64	0.29	0.29
Delay/Veh:	24.0	18.2	18.8	24.3	17.2	17.2	24.3	21.5	21.5	31.2	20.0	20.0
User DelAdj:	1.00	1.00	1.00	1.00	1.00	1.00	1.00	1.00	1.00	1.00	1.00	1.00
AdjDel/Veh:	24.0	18.2	18.8	24.3	17.2	17.2	24.3	21.5	21.5	31.2	20.0	20.0
LOS by Move:	C	B	B	C	B	B	C	C	C	C	C	C
HCM2kAvgQ:	1	5	5	1	4	4	1	5	5	5	2	2

Note: Queue reported is the number of cars per lane.

Traffix 8.0.0715 (c) 2008 Dowling Assoc. Licensed to URBAN CROSSROADS, IRVINE

UNIVERISTY CROSSINGS APARTMENTS TRAFFIC IMPACT ANALYSIS (JN 08139)
2035 With Project Conditions WITH IMPROVEMENTS
PM PEAK HOUR

Level Of Service Computation Report
2000 HCM Operations Method (Future Volume Alternative)

Intersection #5 Alabama Street / Lugonia Avenue

Cycle (sec): 75 Critical Vol./Cap.(X): 0.683
Loss Time (sec): 8 Average Delay (sec/veh): 27.6
Optimal Cycle: OPTIMIZED Level Of Service: C

Approach:	North Bound			South Bound			East Bound			West Bound		
Movement:	L - T - R			L - T - R			L - T - R			L - T - R		
Control:	Protected			Protected			Protected			Protected		
Rights:	Ovl			Include			Include			Include		
Min. Green:	10	20	20	10	20	20	10	24	24	10	24	24
Y+R:	4.0	4.0	4.0	4.0	4.0	4.0	4.0	4.0	4.0	4.0	4.0	4.0
Lanes:	2 0	3 0	1	2 0	3 0	1	2 0	1 1	0	2 0	2 0	1
Volume Module:												
Base Vol:	141	1325	441	305	1297	26	149	394	112	394	309	181
Growth Adj:	1.00	1.00	1.00	1.00	1.00	1.00	1.00	1.00	1.00	1.00	1.00	1.00
Initial Bse:	141	1325	441	305	1297	26	149	394	112	394	309	181
Added Vol:	26	0	0	0	0	19	11	11	14	0	19	0
PasserByVol:	0	0	0	0	0	0	0	0	0	0	0	0
Initial Fut:	167	1325	441	305	1297	45	160	405	126	394	328	181
User Adj:	1.00	1.00	1.00	1.00	1.00	1.00	1.00	1.00	1.00	1.00	1.00	1.00
PHF Adj:	0.97	0.97	0.97	0.97	0.97	0.97	0.97	0.97	0.97	0.97	0.97	0.97
PHF Volume:	172	1362	453	313	1333	46	164	416	129	405	337	186
Reduct Vol:	0	0	0	0	0	0	0	0	0	0	0	0
Reduced Vol:	172	1362	453	313	1333	46	164	416	129	405	337	186
PCE Adj:	1.00	1.00	1.00	1.00	1.00	1.00	1.00	1.00	1.00	1.00	1.00	1.00
MLF Adj:	1.00	1.00	1.00	1.00	1.00	1.00	1.00	1.00	1.00	1.00	1.00	1.00
FinalVolume:	172	1362	453	313	1333	46	164	416	129	405	337	186
Saturation Flow Module:												
Sat/Lane:	1900	1900	1900	1900	1900	1900	1900	1900	1900	1900	1900	1900
Adjustment:	0.85	1.00	0.85	0.85	1.00	0.85	0.85	0.96	0.96	0.85	1.00	0.85
Lanes:	2.00	3.00	1.00	2.00	3.00	1.00	2.00	1.53	0.47	2.00	2.00	1.00
Final Sat.:	3230	5700	1615	3230	5700	1615	3230	2794	869	3230	3800	1615
Capacity Analysis Module:												
Vol/Sat:	0.05	0.24	0.28	0.10	0.23	0.03	0.05	0.15	0.15	0.13	0.09	0.12
Crit Moves:		****		****				****		****		
Green/Cycle:	0.14	0.29	0.44	0.13	0.28	0.28	0.14	0.32	0.32	0.15	0.33	0.33
Volume/Cap:	0.38	0.83	0.64	0.73	0.83	0.10	0.37	0.47	0.47	0.83	0.27	0.35
Delay/Veh:	29.8	28.6	18.3	37.4	29.1	20.0	29.8	20.7	20.7	42.1	18.4	19.3
User DelAdj:	1.00	1.00	1.00	1.00	1.00	1.00	1.00	1.00	1.00	1.00	1.00	1.00
AdjDel/Veh:	29.8	28.6	18.3	37.4	29.1	20.0	29.8	20.7	20.7	42.1	18.4	19.3
LOS by Move:	C	C	B	D	C	C	C	C	C	D	B	B
HCM2kAvgQ:	2	13	9	6	12	1	2	5	5	8	3	3

Note: Queue reported is the number of cars per lane.

Traffix 8.0.0715 (c) 2008 Dowling Assoc. Licensed to URBAN CROSSROADS, IRVINE

Movement	EBL	EBT	EBR	WBL	WBT	WBR	NBL	NBT	NBR	SBL	SBT	SBR
Lane Configurations												
Volume (vph)	0	0	0	189	431	282	464	1831	0	0	1527	485
Ideal Flow (vphpl)	1900	1900	1900	1900	1900	1900	1900	1900	1900	1900	1900	1900
Total Lost time (s)					5.0		4.0	5.0			5.0	5.0
Lane Util. Factor					0.95		0.97	0.91			0.91	1.00
Frpb, ped/bikes					0.99		1.00	1.00			1.00	1.00
Flpb, ped/bikes					1.00		1.00	1.00			1.00	1.00
Frt					0.95		1.00	1.00			1.00	0.85
Flt Protected					0.99		0.95	1.00			1.00	1.00
Satd. Flow (prot)					3387		3502	5187			5187	1615
Flt Permitted					0.99		0.95	1.00			1.00	1.00
Satd. Flow (perm)					3387		3502	5187			5187	1615
Peak-hour factor, PHF	0.97	0.97	0.97	0.97	0.97	0.97	0.97	0.97	0.97	0.97	0.97	0.97
Adj. Flow (vph)	0	0	0	195	444	291	478	1888	0	0	1574	500
RTOR Reduction (vph)	0	0	0	0	11	0	0	0	0	0	0	67
Lane Group Flow (vph)	0	0	0	0	919	0	478	1888	0	0	1574	433
Confl. Peds. (#/hr)						5						
Heavy Vehicles (%)	0%	0%	0%	0%	0%	0%	0%	0%	0%	0%	0%	0%
Turn Type				Split			Prot					Perm
Protected Phases				4	4		1	6			2	
Permitted Phases												2
Actuated Green, G (s)					35.9		19.4	74.1			50.7	50.7
Effective Green, g (s)					35.9		19.4	74.1			50.7	50.7
Actuated g/C Ratio					0.30		0.16	0.62			0.42	0.42
Clearance Time (s)					5.0		4.0	5.0			5.0	5.0
Vehicle Extension (s)					2.0		2.0	2.0			2.0	2.0
Lane Grp Cap (vph)					1013		566	3203			2192	682
v/s Ratio Prot					c0.27		c0.14	0.36			c0.30	
v/s Ratio Perm												0.27
v/c Ratio					0.91		0.84	0.59			0.72	0.63
Uniform Delay, d1					40.5		48.8	13.8			28.7	27.3
Progression Factor					1.00		1.29	0.29			1.00	1.00
Incremental Delay, d2					11.3		7.7	0.6			2.1	4.5
Delay (s)					51.7		70.6	4.5			30.8	31.8
Level of Service					D		E	A			C	C
Approach Delay (s)		0.0			51.7			17.9			31.0	
Approach LOS		A			D			B			C	

Intersection Summary			
HCM Average Control Delay	28.8	HCM Level of Service	C
HCM Volume to Capacity ratio	0.81		
Actuated Cycle Length (s)	120.0	Sum of lost time (s)	14.0
Intersection Capacity Utilization	81.5%	ICU Level of Service	D
Analysis Period (min)	15		
c Critical Lane Group			

Movement	EBL	EBT	EBR	WBL	WBT	WBR	NBL	NBT	NBR	SBL	SBT	SBR
Lane Configurations												
Volume (vph)	631	77	506	0	0	0	0	1664	332	371	1345	0
Ideal Flow (vphpl)	1900	1900	1900	1900	1900	1900	1900	1900	1900	1900	1900	1900
Total Lost time (s)	5.0	5.0	5.0					5.0	5.0	4.0	5.0	
Lane Util. Factor	0.95	0.95	1.00					0.91	1.00	0.97	0.91	
Frpb, ped/bikes	1.00	1.00	1.00					1.00	0.98	1.00	1.00	
Flpb, ped/bikes	1.00	1.00	1.00					1.00	1.00	1.00	1.00	
Frt	1.00	1.00	0.85					1.00	0.85	1.00	1.00	
Flt Protected	0.95	0.96	1.00					1.00	1.00	0.95	1.00	
Satd. Flow (prot)	1715	1737	1615					5187	1578	3502	5187	
Flt Permitted	0.95	0.96	1.00					1.00	1.00	0.95	1.00	
Satd. Flow (perm)	1715	1737	1615					5187	1578	3502	5187	
Peak-hour factor, PHF	0.99	0.99	0.99	0.99	0.99	0.99	0.99	0.99	0.99	0.99	0.99	0.99
Adj. Flow (vph)	637	78	511	0	0	0	0	1681	335	375	1359	0
RTOR Reduction (vph)	0	0	27	0	0	0	0	0	194	0	0	0
Lane Group Flow (vph)	357	358	484	0	0	0	0	1681	141	375	1359	0
Confl. Peds. (#/hr)									5			
Heavy Vehicles (%)	0%	0%	0%	0%	0%	0%	0%	0%	0%	0%	0%	0%
Turn Type	Split		Perm						Perm	Prot		
Protected Phases	8	8						6		5	2	
Permitted Phases			8						6			
Actuated Green, G (s)	39.6	39.6	39.6					50.4	50.4	16.0	70.4	
Effective Green, g (s)	39.6	39.6	39.6					50.4	50.4	16.0	70.4	
Actuated g/C Ratio	0.33	0.33	0.33					0.42	0.42	0.13	0.59	
Clearance Time (s)	5.0	5.0	5.0					5.0	5.0	4.0	5.0	
Vehicle Extension (s)	2.0	2.0	2.0					2.0	2.0	2.0	2.0	
Lane Grp Cap (vph)	566	573	533					2179	663	467	3043	
v/s Ratio Prot	0.21	0.21						c0.32		c0.11	0.26	
v/s Ratio Perm			c0.30						0.09			
v/c Ratio	0.63	0.62	0.91					0.77	0.21	0.80	0.45	
Uniform Delay, d1	34.0	33.9	38.4					29.9	22.2	50.5	13.9	
Progression Factor	1.00	1.00	1.00					1.00	1.00	0.72	0.24	
Incremental Delay, d2	1.7	1.5	18.7					2.7	0.7	6.2	0.3	
Delay (s)	35.7	35.5	57.1					32.6	22.9	42.3	3.7	
Level of Service	D	D	E					C	C	D	A	
Approach Delay (s)		44.6			0.0			31.0			12.0	
Approach LOS		D			A			C			B	

Intersection Summary			
HCM Average Control Delay	27.7	HCM Level of Service	C
HCM Volume to Capacity ratio	0.83		
Actuated Cycle Length (s)	120.0	Sum of lost time (s)	14.0
Intersection Capacity Utilization	81.5%	ICU Level of Service	D
Analysis Period (min)	15		
c Critical Lane Group			

UNIVERISTY CROSSINGS APARTMENTS TRAFFIC IMPACT ANALYSIS (JN 08139)
2035 With Project Conditions WITH IMPROVEMENTS
PM PEAK HOUR

Level Of Service Computation Report
2000 HCM Operations Method (Future Volume Alternative)

Intersection #8 Alabama Street / Redlands Boulevard

Cycle (sec): 80 Critical Vol./Cap.(X): 0.794
Loss Time (sec): 8 Average Delay (sec/veh): 31.6
Optimal Cycle: OPTIMIZED Level Of Service: C

Approach:	North Bound			South Bound			East Bound			West Bound		
Movement:	L - T - R			L - T - R			L - T - R			L - T - R		
Control:	Protected			Protected			Protected			Protected		
Rights:	Include			Include			Include			Include		
Min. Green:	10	25	25	10	25	25	10	23	23	10	23	23
Y+R:	4.0	4.0	4.0	4.0	4.0	4.0	4.0	4.0	4.0	4.0	4.0	4.0
Lanes:	2 0	2 1	0	2 0	2 0	1	2 0	1 1	0	2 0	1 1	0
Volume Module:												
Base Vol:	169	903	194	360	867	351	441	673	137	175	452	360
Growth Adj:	1.00	1.00	1.00	1.00	1.00	1.00	1.00	1.00	1.00	1.00	1.00	1.00
Initial Bse:	169	903	194	360	867	351	441	673	137	175	452	360
Added Vol:	0	6	0	4	4	0	0	0	0	0	0	6
PasserByVol:	0	0	0	0	0	0	0	0	0	0	0	0
Initial Fut:	169	909	194	364	871	351	441	673	137	175	452	366
User Adj:	1.00	1.00	1.00	1.00	1.00	1.00	1.00	1.00	1.00	1.00	1.00	1.00
PHF Adj:	0.95	0.95	0.95	0.95	0.95	0.95	0.95	0.95	0.95	0.95	0.95	0.95
PHF Volume:	178	957	204	383	917	369	464	708	144	184	476	385
Reduct Vol:	0	0	0	0	0	0	0	0	0	0	0	0
Reduced Vol:	178	957	204	383	917	369	464	708	144	184	476	385
PCE Adj:	1.00	1.00	1.00	1.00	1.00	1.00	1.00	1.00	1.00	1.00	1.00	1.00
MLF Adj:	1.00	1.00	1.00	1.00	1.00	1.00	1.00	1.00	1.00	1.00	1.00	1.00
FinalVolume:	178	957	204	383	917	369	464	708	144	184	476	385
Saturation Flow Module:												
Sat/Lane:	1900	1900	1900	1900	1900	1900	1900	1900	1900	1900	1900	1900
Adjustment:	0.85	0.97	0.97	0.85	1.00	0.85	0.85	0.98	0.98	0.85	0.93	0.93
Lanes:	2.00	2.47	0.53	2.00	2.00	1.00	2.00	1.66	0.34	2.00	1.11	0.89
Final Sat.:	3230	4575	976	3230	3800	1615	3230	3078	627	3230	1959	1586
Capacity Analysis Module:												
Vol/Sat:	0.06	0.21	0.21	0.12	0.24	0.23	0.14	0.23	0.23	0.06	0.24	0.24
Crit Moves:		****		****			****				****	
Green/Cycle:	0.13	0.31	0.31	0.14	0.32	0.32	0.16	0.31	0.31	0.14	0.29	0.29
Volume/Cap:	0.43	0.67	0.67	0.87	0.75	0.71	0.87	0.73	0.73	0.42	0.84	0.84
Delay/Veh:	32.9	24.9	24.9	51.4	27.1	28.7	47.6	26.8	26.8	32.2	33.4	33.4
User DelAdj:	1.00	1.00	1.00	1.00	1.00	1.00	1.00	1.00	1.00	1.00	1.00	1.00
AdjDel/Veh:	32.9	24.9	24.9	51.4	27.1	28.7	47.6	26.8	26.8	32.2	33.4	33.4
LOS by Move:	C	C	C	D	C	C	D	C	C	C	C	C
HCM2kAvgQ:	3	9	9	8	12	9	9	11	11	3	13	13

Note: Queue reported is the number of cars per lane.

Traffix 8.0.0715 (c) 2008 Dowling Assoc. Licensed to URBAN CROSSROADS, IRVINE