THIS MAP IS FOR THE PURPOSE OF AD VALOREM TAXATION ONLY.

N.1/2, S.E.1/4, Fract'l Sec.4, T.5N., R.5W.

City of Adelanto
Tax Rate Area
14000,14001,14006

3128 - 23

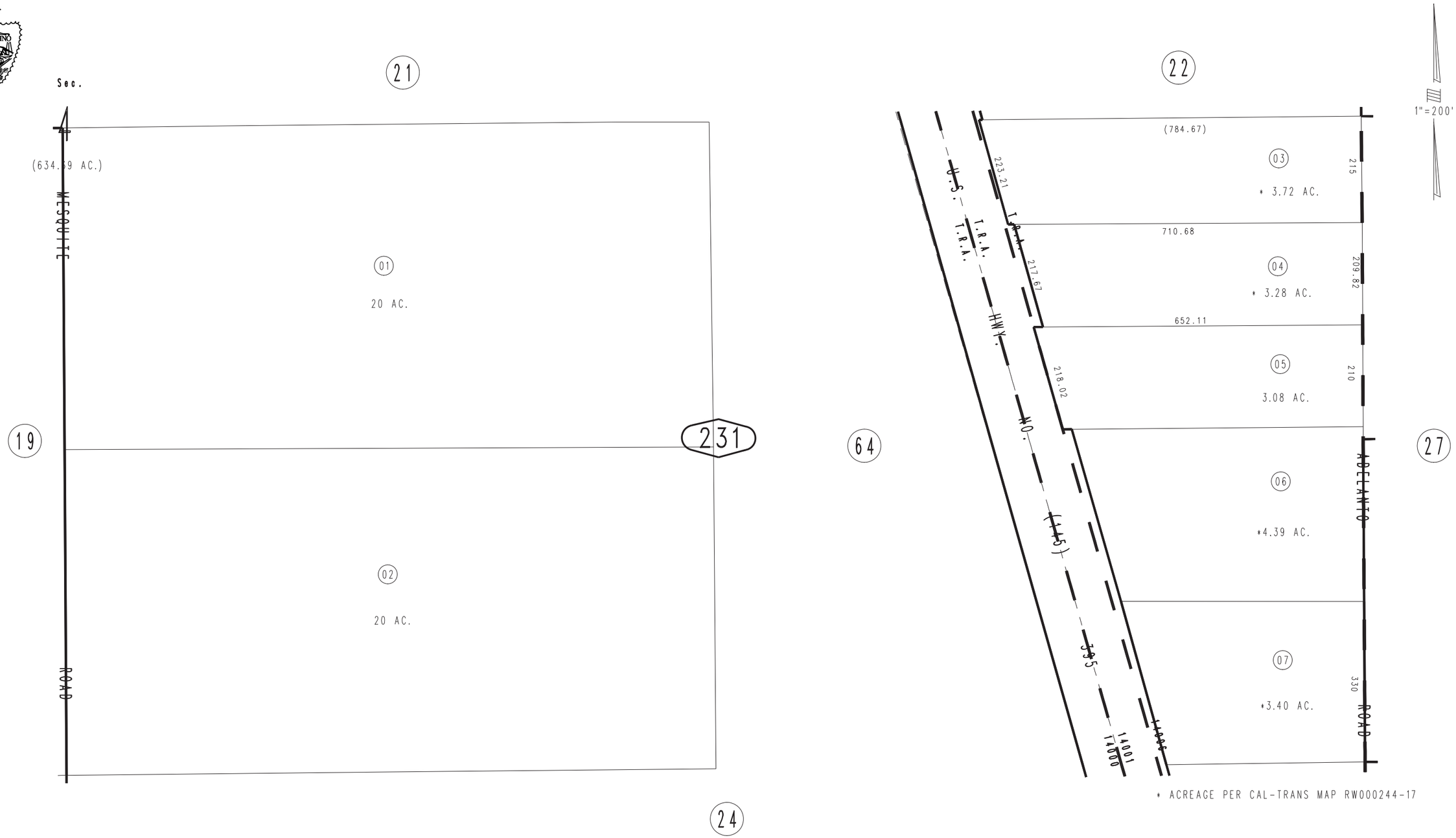

* ACREAGE PER CAL-TRANS MAP RW000244-17

APRIL 2009 RM

Assessor's Map
Book 3128 Page 23
San Bernardino County

REVISED
02/01/18 GW
06/15/18 GW
07/18/18 KA
09/25/19 KA