THIS MAP IS FOR THE PURPOSE OF AD VALOREM TAXATION ONLY.

N.1/2, S.E.1/4, Sec. 28, T.5N., R.5W., S.B.M.

City of Victorville
Tax Rate Area
12104,12205

3096 - 36

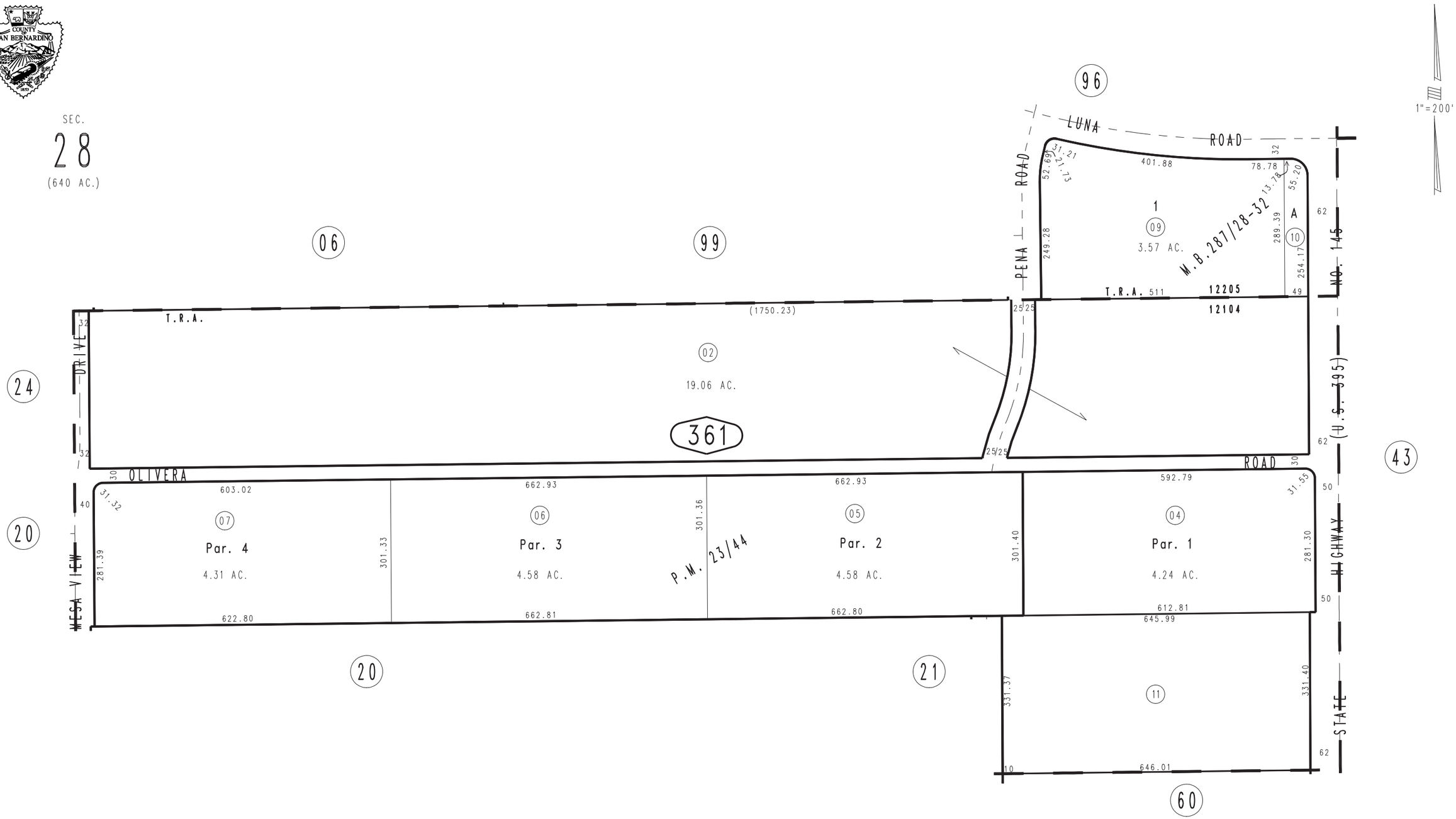

REVISED
03/06/18 GW

DEC. 1991

Ptn. Tract No. 16107-1, M.B. 287/28-32
Parcel Map No. 2619, P.M. 23/44

Assessor's Map
Book 3096 Page 36
San Bernardino County