THIS MAP IS FOR THE PURPOSE OF AD VALOREM TAXATION ONLY.

Ptn. Rancho Santa Ana Del Chino, M.B. 6/15

City of Chino
Tax Rate Area
1164

1057 - 14

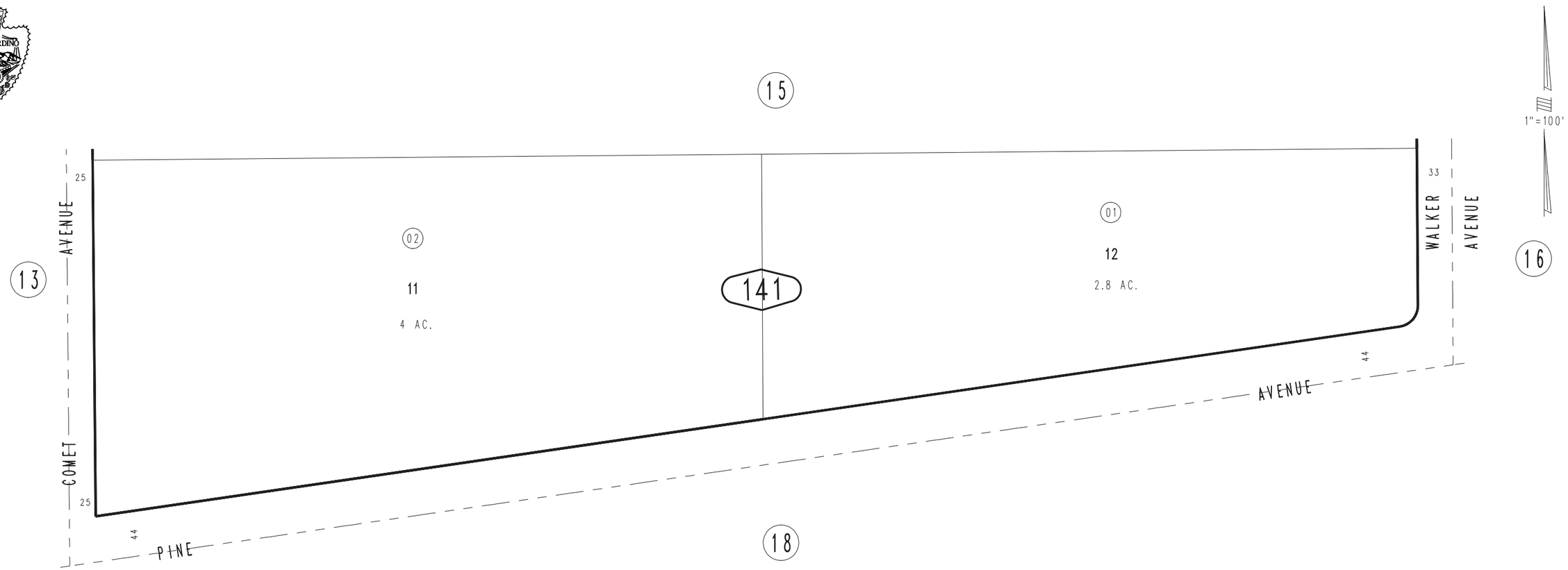

SEPTEMBER 2006 RM

Ptn. N.W.1/4, Sec. 33
T.2S., R.7W.

Assessor's Map
Book 1057 Page 14
San Bernardino County

REVISED