THIS MAP IS FOR THE PURPOSE OF AD VALOREM TAXATION ONLY.

Ptn. Rancho Santa Ana Del Chino, M.B. 6/15

City of Chino
Tax Rate Area
1164

1055 - 06

1" = 100'

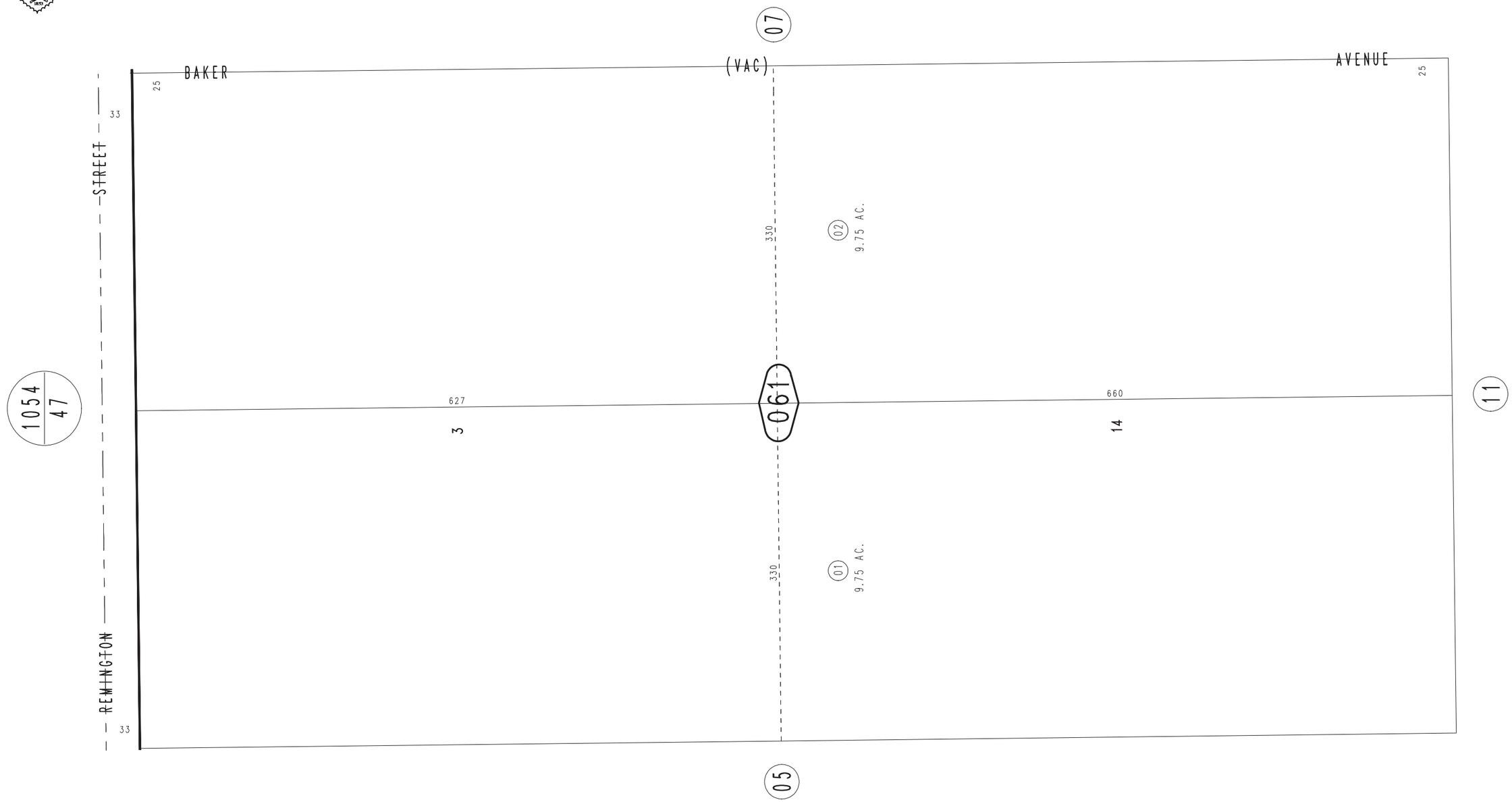

REVISED
03/21/06 BK

November 2004

Ptn. N.E.1/4, Sec.28
T.2S.,R.7W.

Assessor's Map
Book 1055 Page 06
San Bernardino County