THIS MAP IS FOR THE PURPOSE OF AD VALOREM TAXATION ONLY.

Por. Rancho Santa Ana Del Chino, M.B. 6/15

City of Chino
Tax Rate Area
1160

1027 - 07

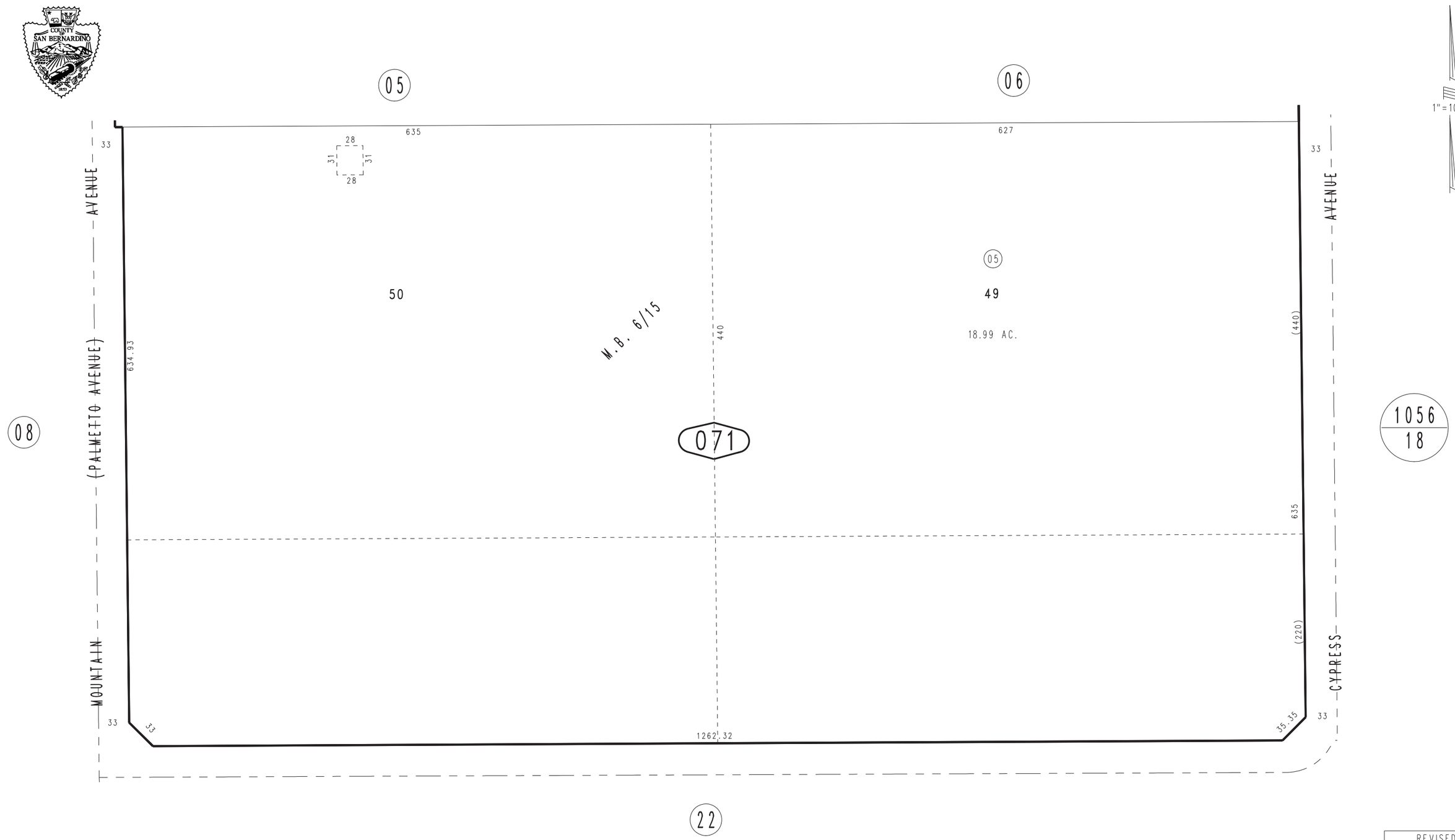

REVISED
06/18/07 LH
09/24/07 KA
03/12/09 KC

NOV. 1972

Ptn. S.E.1/4, Sec. 25
T.2S., R.8W.

Assessor's Map
Book 1027 Page 07
San Bernardino County