THIS MAP IS FOR THE PURPOSE OF AD VALOREM TAXATION ONLY.

N.1/2 Fractional Sec.5, T.7N.,R.8E., S.B.B.&M.

Silver Valley Unified
Tax Rate Area
109025

0551 - 28

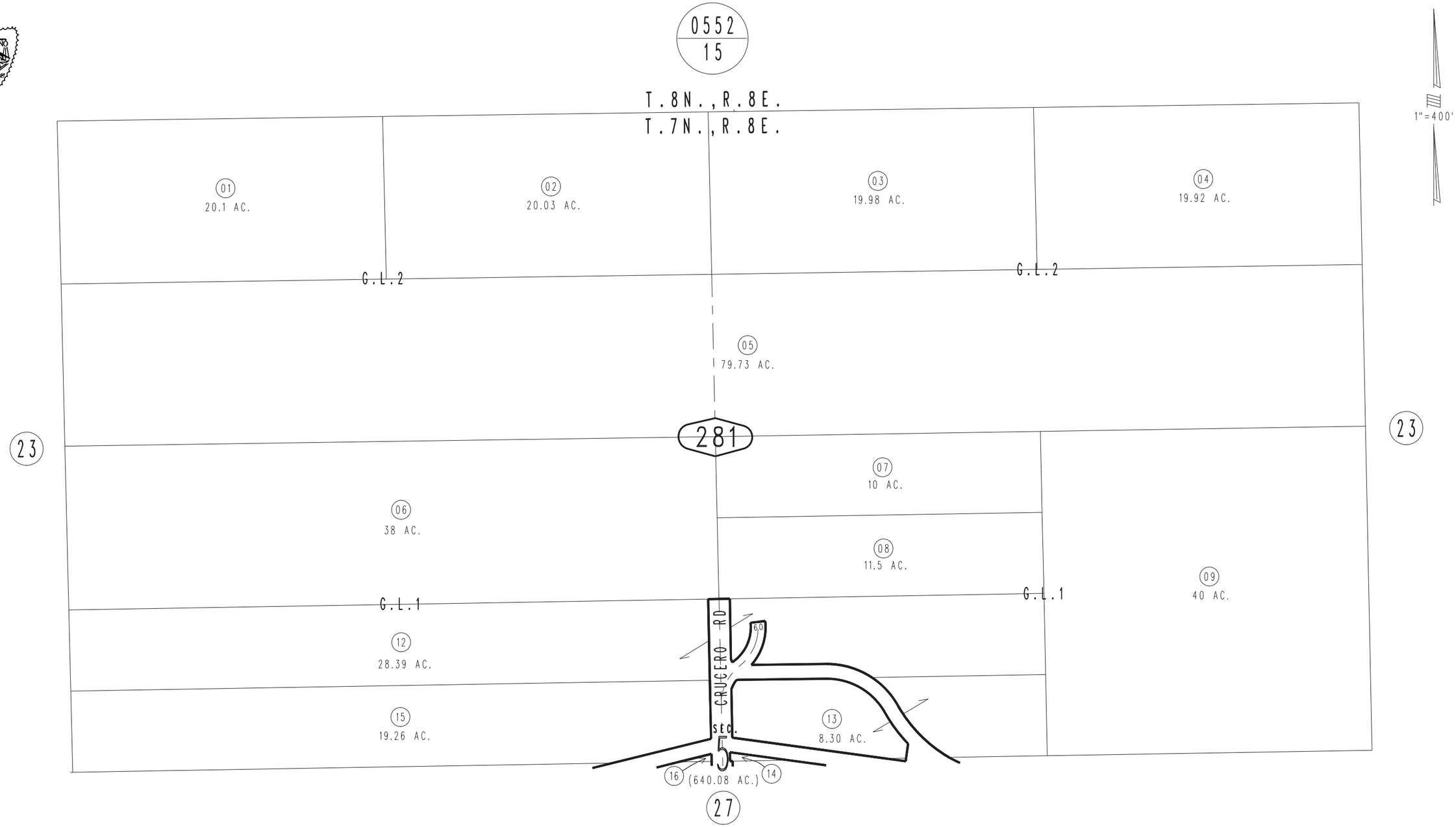

REVISED
06/16/20 RU

Assessor's Map
Book 0551 Page 28
San Bernardino County

July 2005