THIS MAP IS FOR THE PURPOSE OF AD VALOREM TAXATION ONLY.

# Sec.16&17, T.8N.,R.5E., S.B.B.&M.

Silver Valley Unified 0529- 21
Tax Rate Area
109091

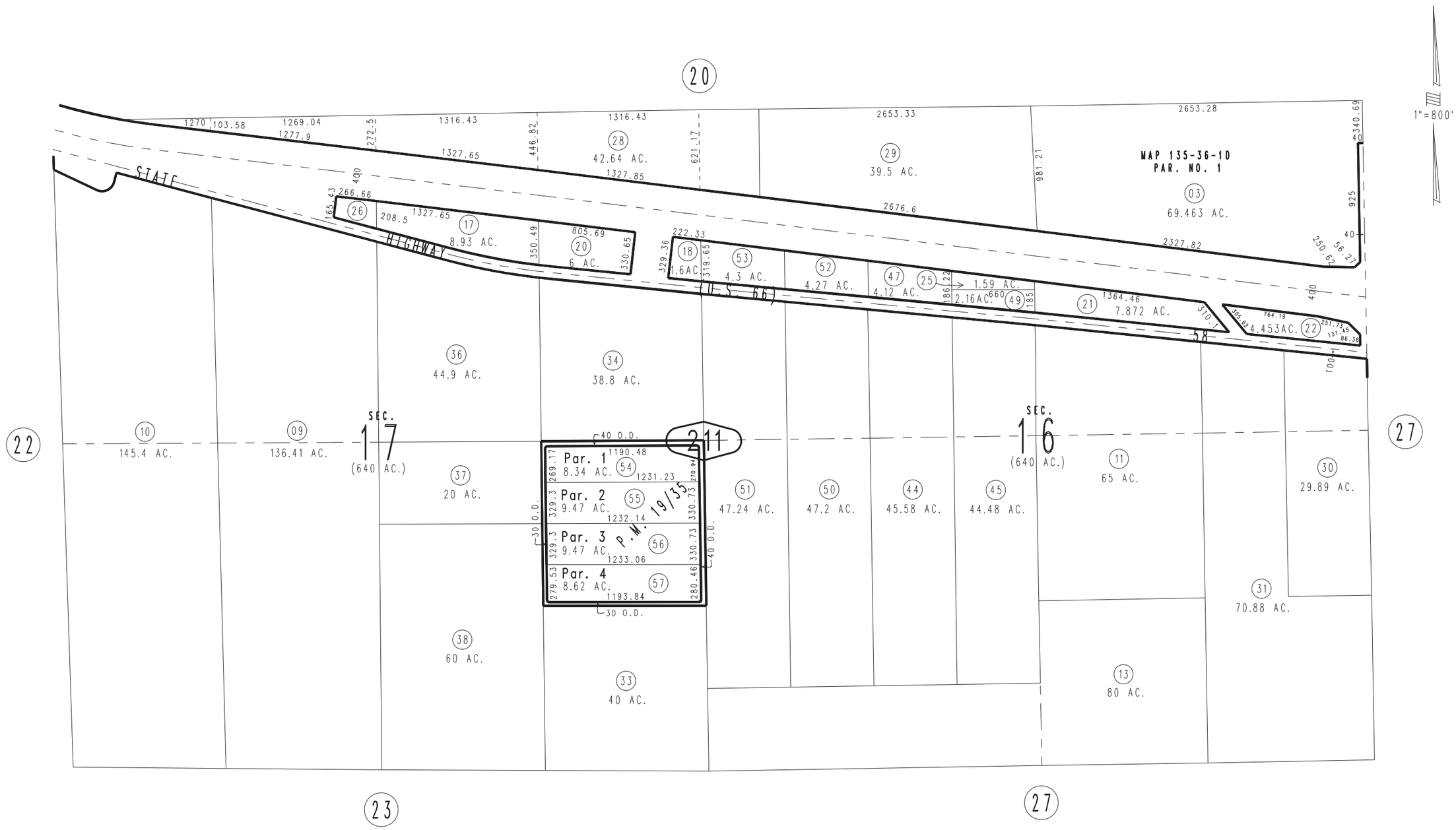


REVISED

Assessor's Map
Book 0529 Page 21
San Bernardino County

July 2005

Parcel Map No. 2062, P.M. 19/35