THIS MAP IS FOR THE PURPOSE OF AD VALOREM TAXATION ONLY.

COUNTY SAN BERNARDINO

Ptn. Sec.36, T.5N.,R.4W., S.B.B.&M.

Town of Apple Valley 0444- 12
Apple Valley Outside
City of Victorville
Tax Rate Area
12122 21004 21005
21007 114049 114050

1"=800'

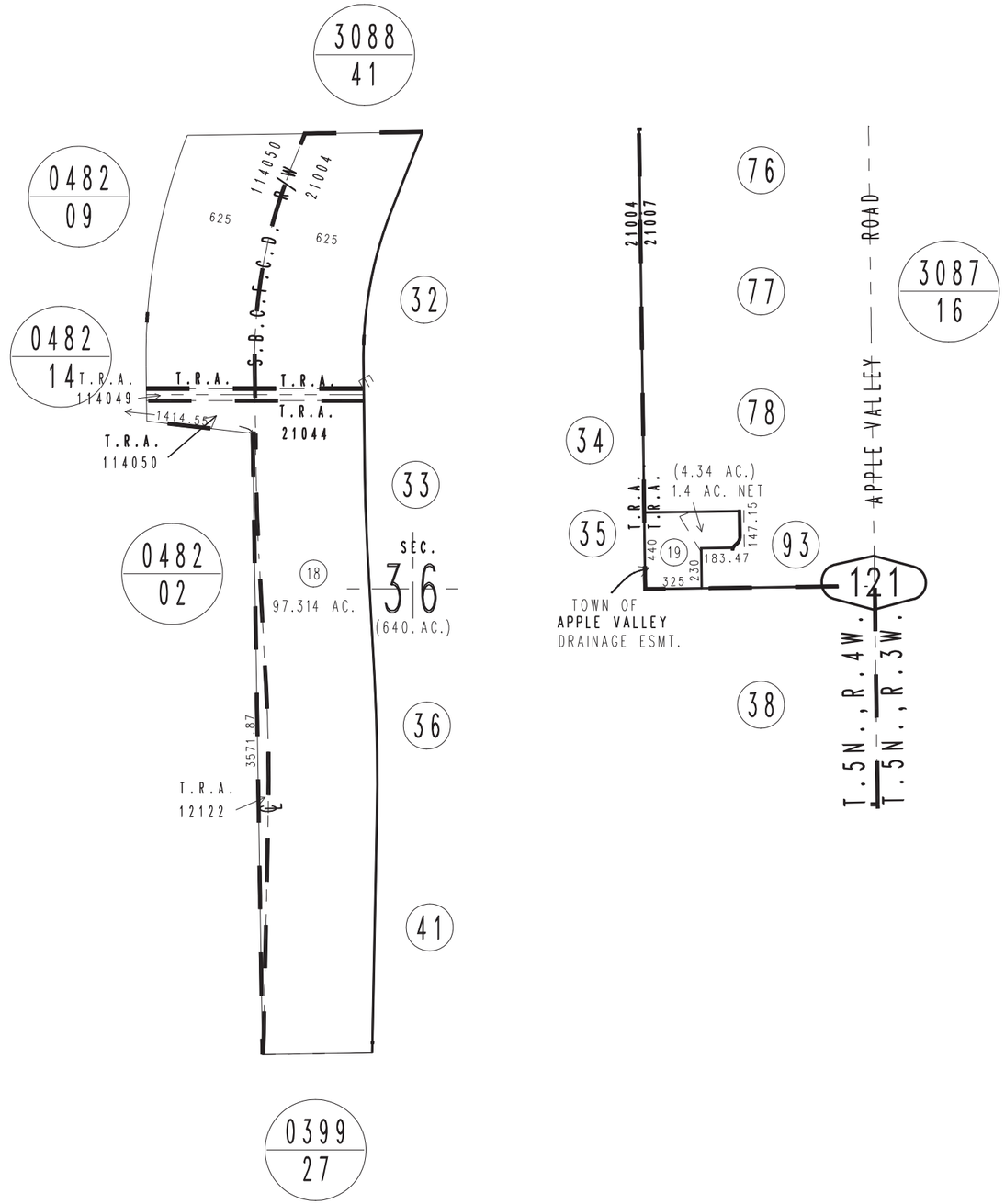

REVISED
02/14/14 RM

May 2004

Assessor's Map
Book 0444 Page 12
San Bernardino County