THIS MAP IS FOR THE PURPOSE OF AD VALOREM TAXATION ONLY.

Ptn. Sec.29 & Sec.28, T.2N.,R.2E., S.B.B.&M.

Bear Valley Unified Sch. Dist. 0315 - 30
Tax Rate Area
57060

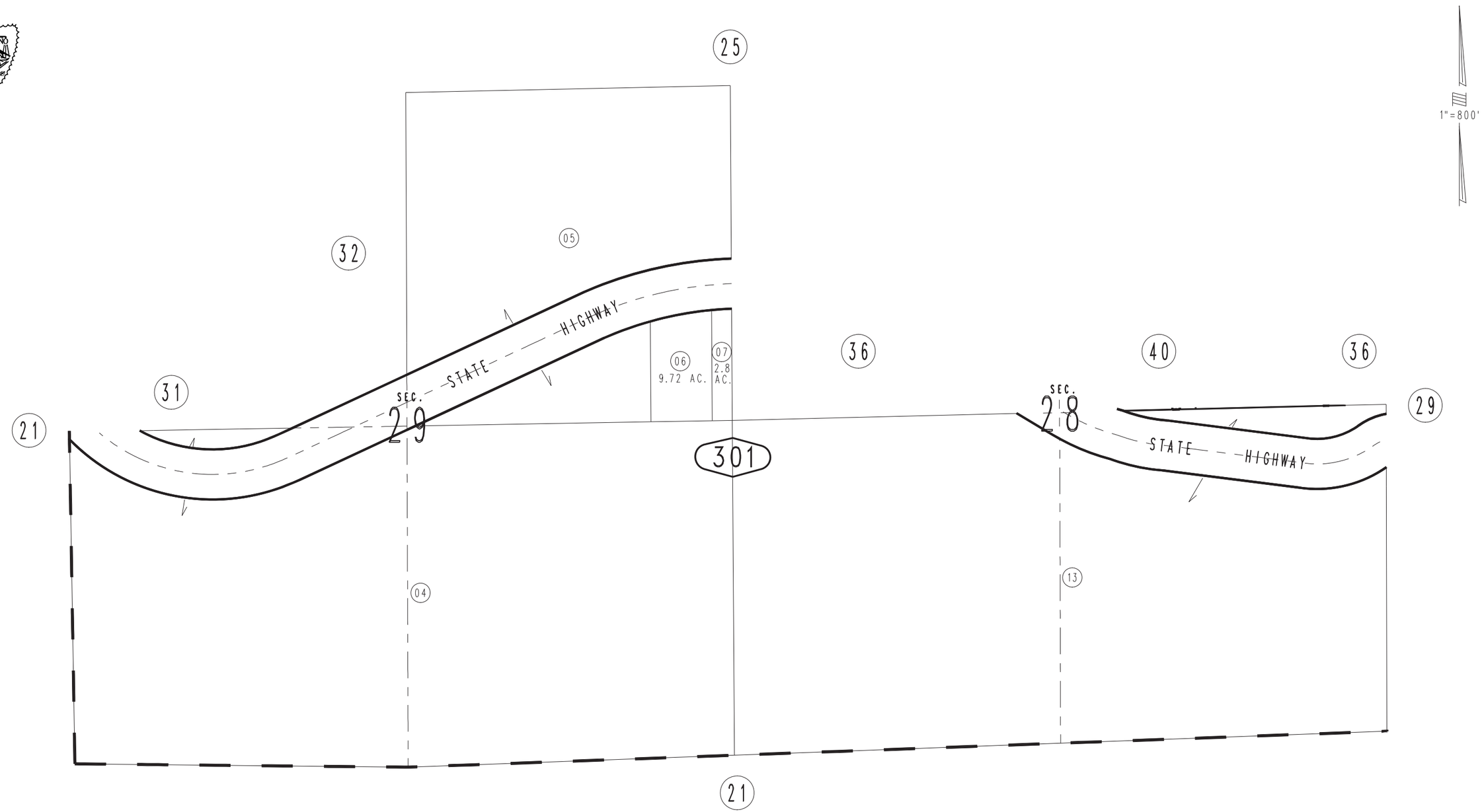

REVISED
01/03/07 GL

Assessor's Map
Book 0315 Page 30
San Bernardino County

November 2004