THIS MAP IS FOR THE PURPOSE OF AD VALOREM TAXATION ONLY.

Ptn. Yucaipa Water & Lumber Co. Sub. No. 1
M.B. 17/27

City of Yucaipa
Tax Rate Area
22002

0303- 19

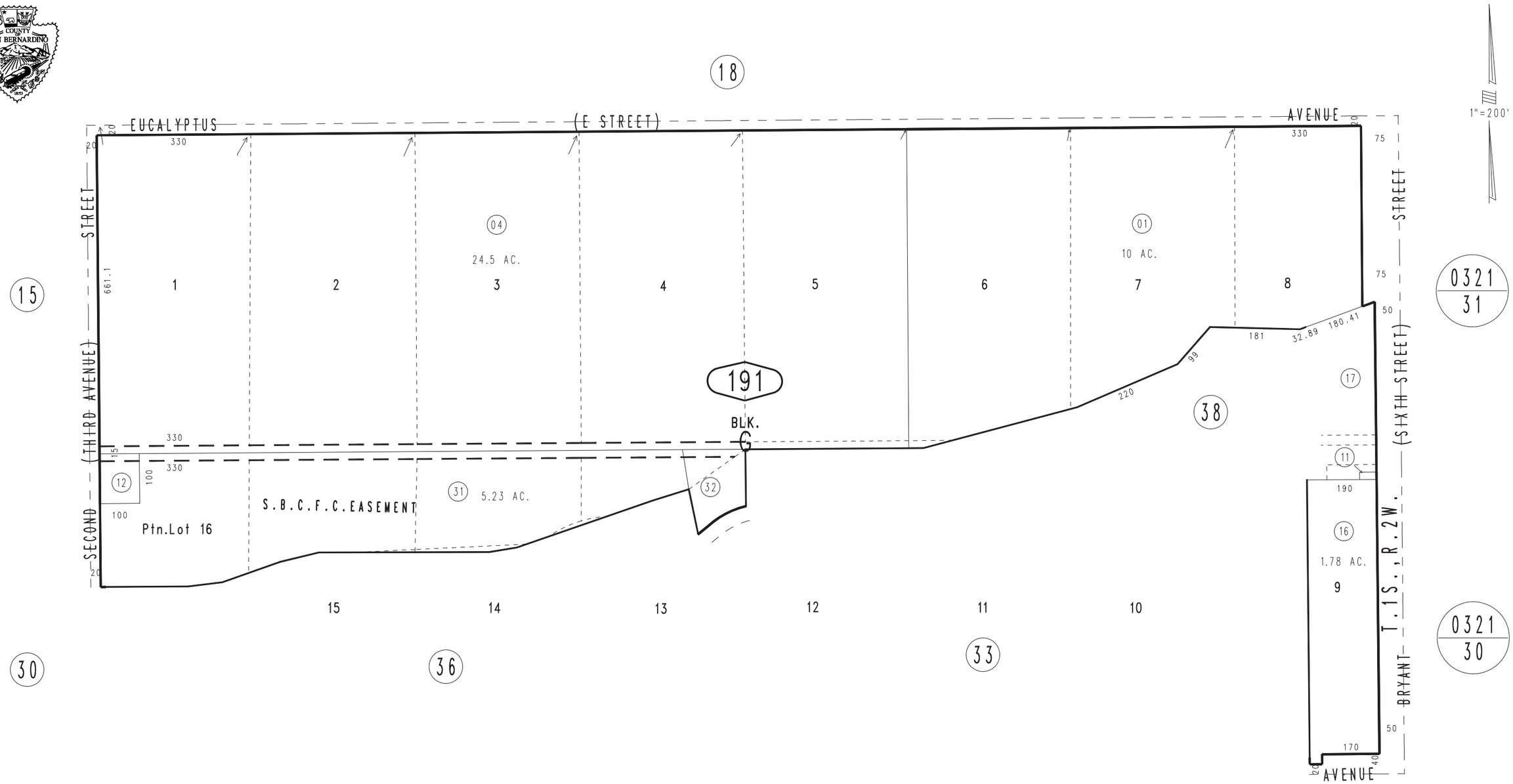

REVISED
07/27/12 BK-MC

January 2005

Ptn. N.E.1/4, Sec. 36
T.1S., R.2W.

Assessor's Map
Book 0303 Page 19
San Bernardino County