THIS MAP IS FOR THE PURPOSE OF AD VALOREM TAXATION ONLY.

Ptn. Rancho San Bernardino
M.B. 7/2

City of Loma Linda
Tax Rate Area
13003 13010 13012
13013 13042 13047

0292 - 12

1" = 400'

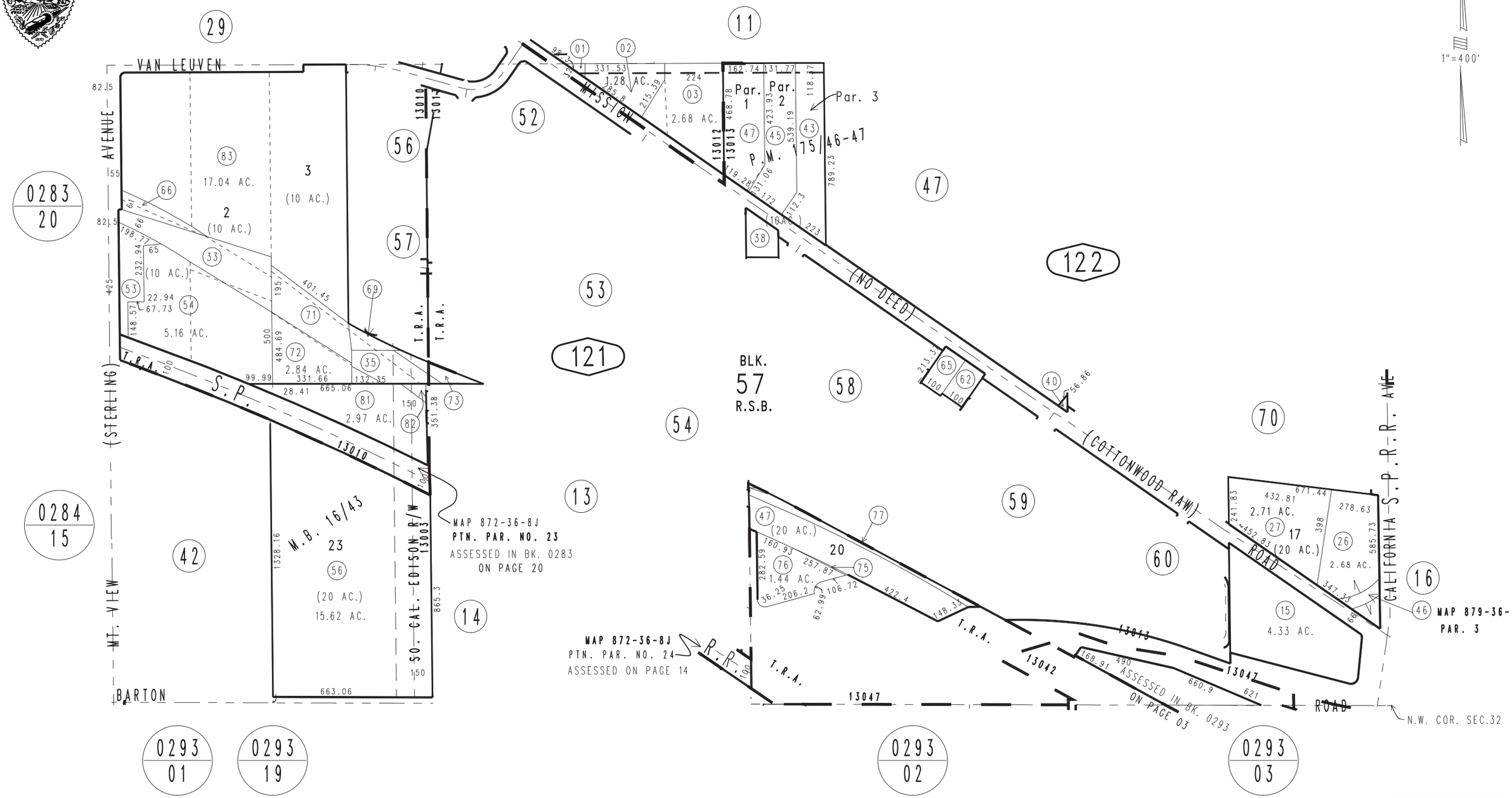

Parcel Map No. 14590, P.M. 175/46-47
Map of Lots 24,23, & Sub. of Lots 22&21, Blk. 57, R.S.B., M.B. 16/43

Ptn. S.E.1/4, Sec. 30
T.1S., R.3W.

Assessor's Map
Book 0292 Page 12
San Bernardino County

REVISED
10/06/16 RU
09/12/18 KC
03/22/19 RU

February 2004