THIS MAP IS FOR THE PURPOSE OF AD VALOREM TAXATION ONLY.

Ptn. S.1/2, Sec.25, T.1S.,R.5W., S.B.B.&M.

City of Colton
Tax Rate Area
2010,2096

0258 - 16

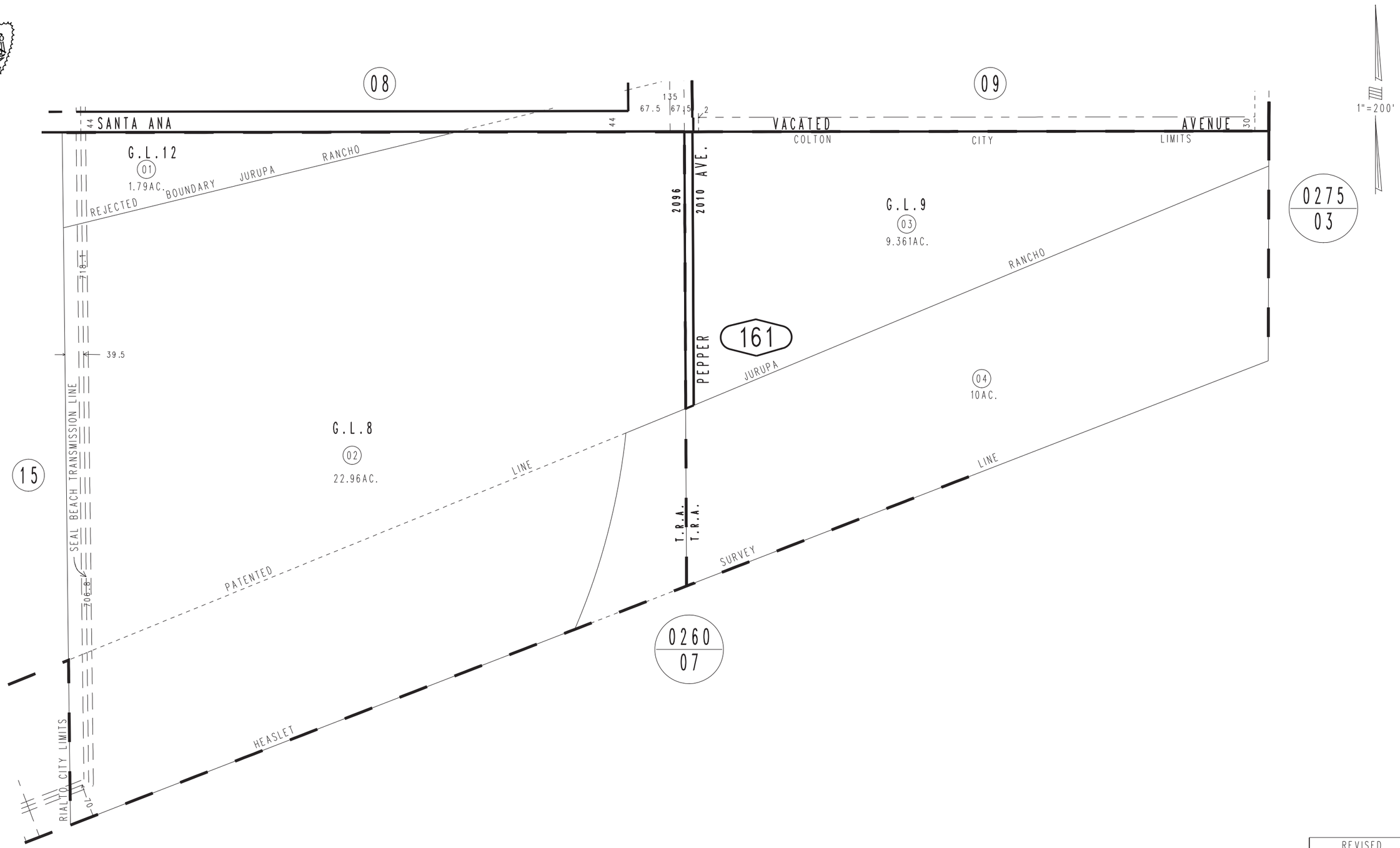

REVISED

October 2003

Assessor's Map
Book 0258 Page 16
San Bernardino County