THIS MAP IS FOR THE PURPOSE OF AD VALOREM TAXATION ONLY.

S.1/2, Sec.13, T.1N.,R.7W., S.B.B.&M.

Alta Loma Elementary 0201 - 28
Tax Rate Area
52043

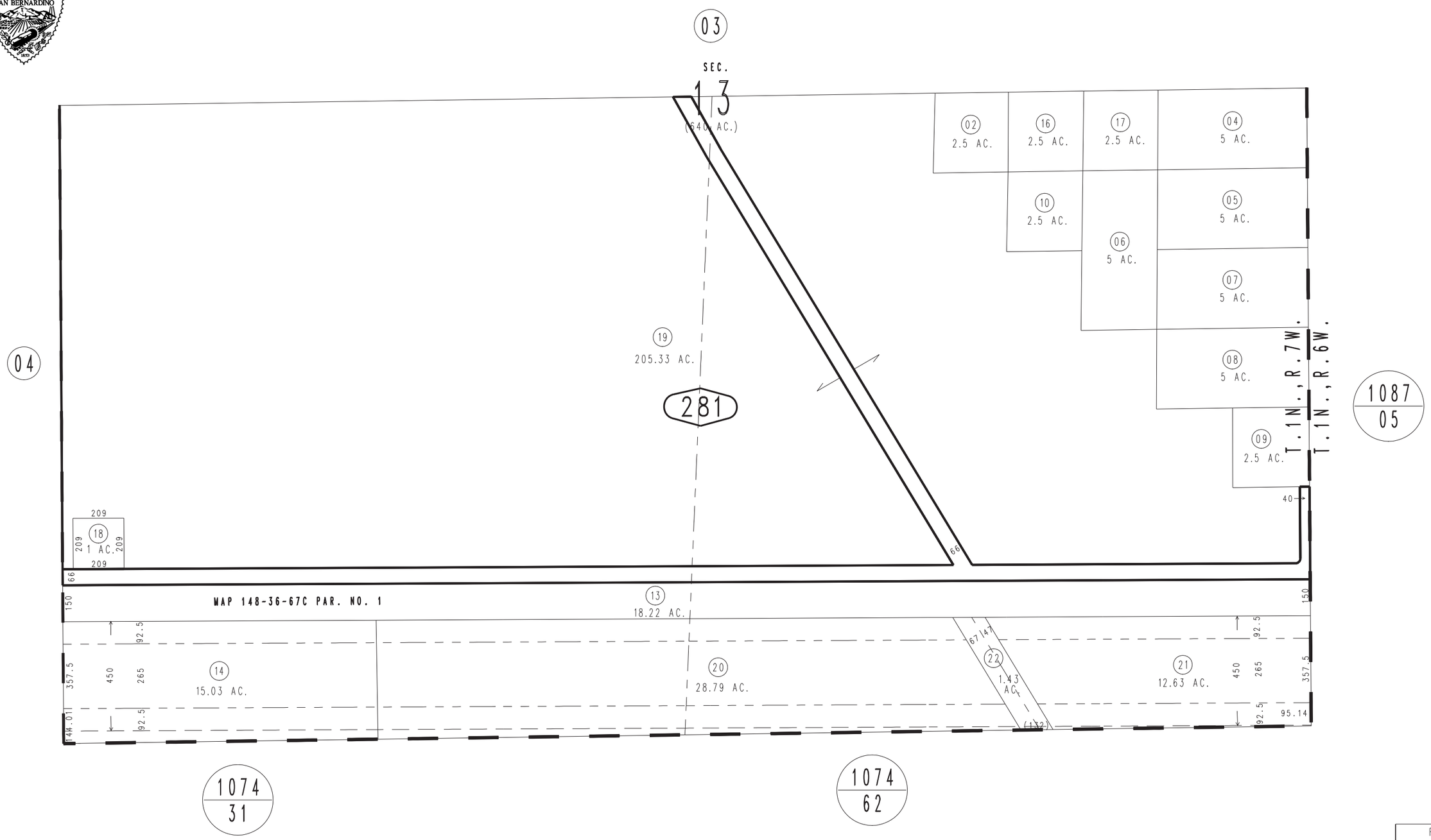

REVISED
08/30/12 BK

Assessor's Map
Book 0201 Page 28
San Bernardino County

July 2004