THIS MAP IS FOR THE PURPOSE OF AD VALOREM TAXATION ONLY.

INDEX MAP
BOOK 3091
City of Victorville

1"=400'

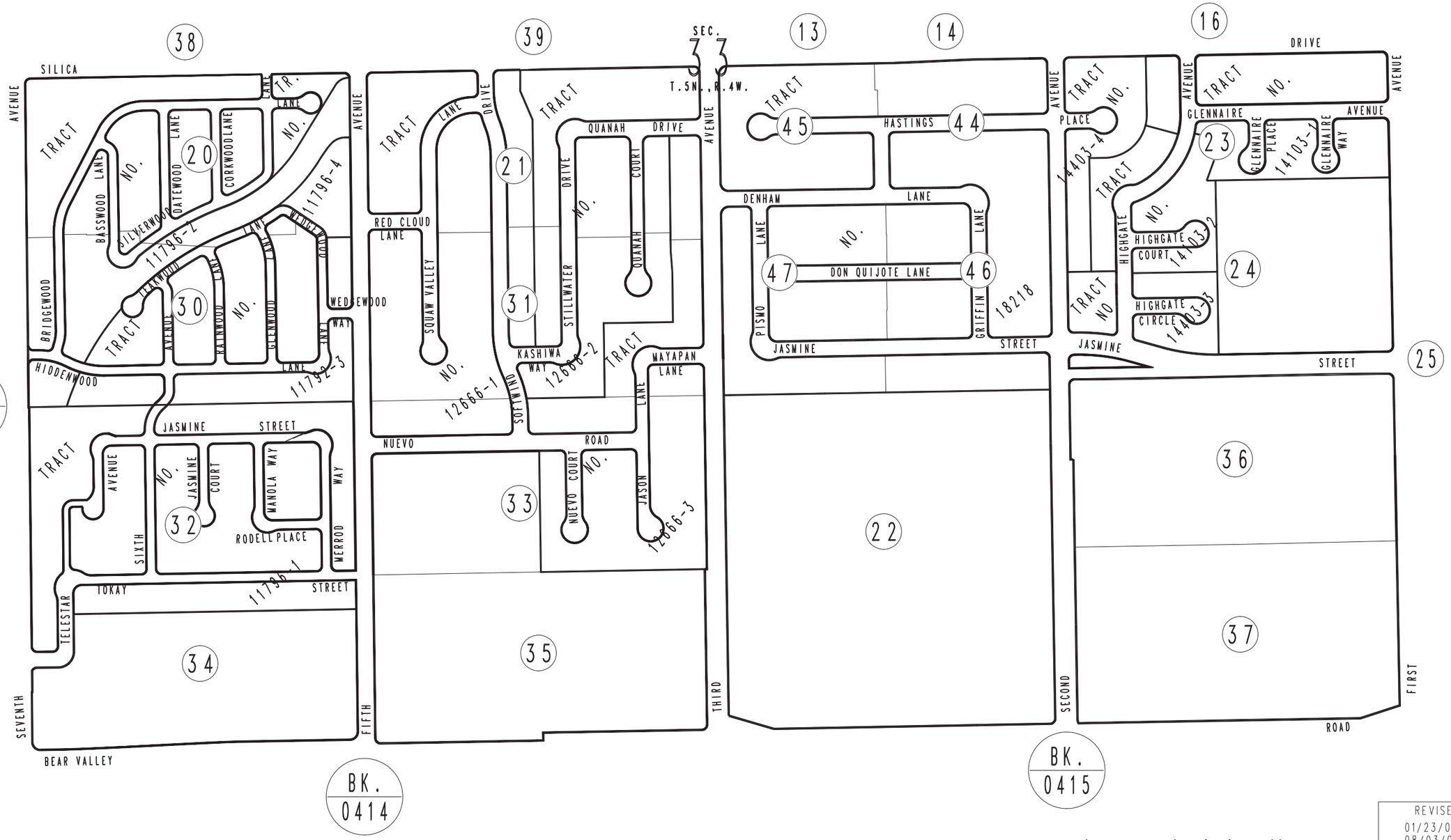

FEBRUARY 1994

Assessor's Index Map
Book 3091
San Bernardino County

REVISED
01/23/06 KP
08/03/06 GW