THIS MAP IS FOR THE PURPOSE OF AD VALOREM TAXATION ONLY.

INDEX MAP
BOOK 0285
SAN BERNARDINO UNIFIED, CITY OF SAN BERNARDINO

1"=400'

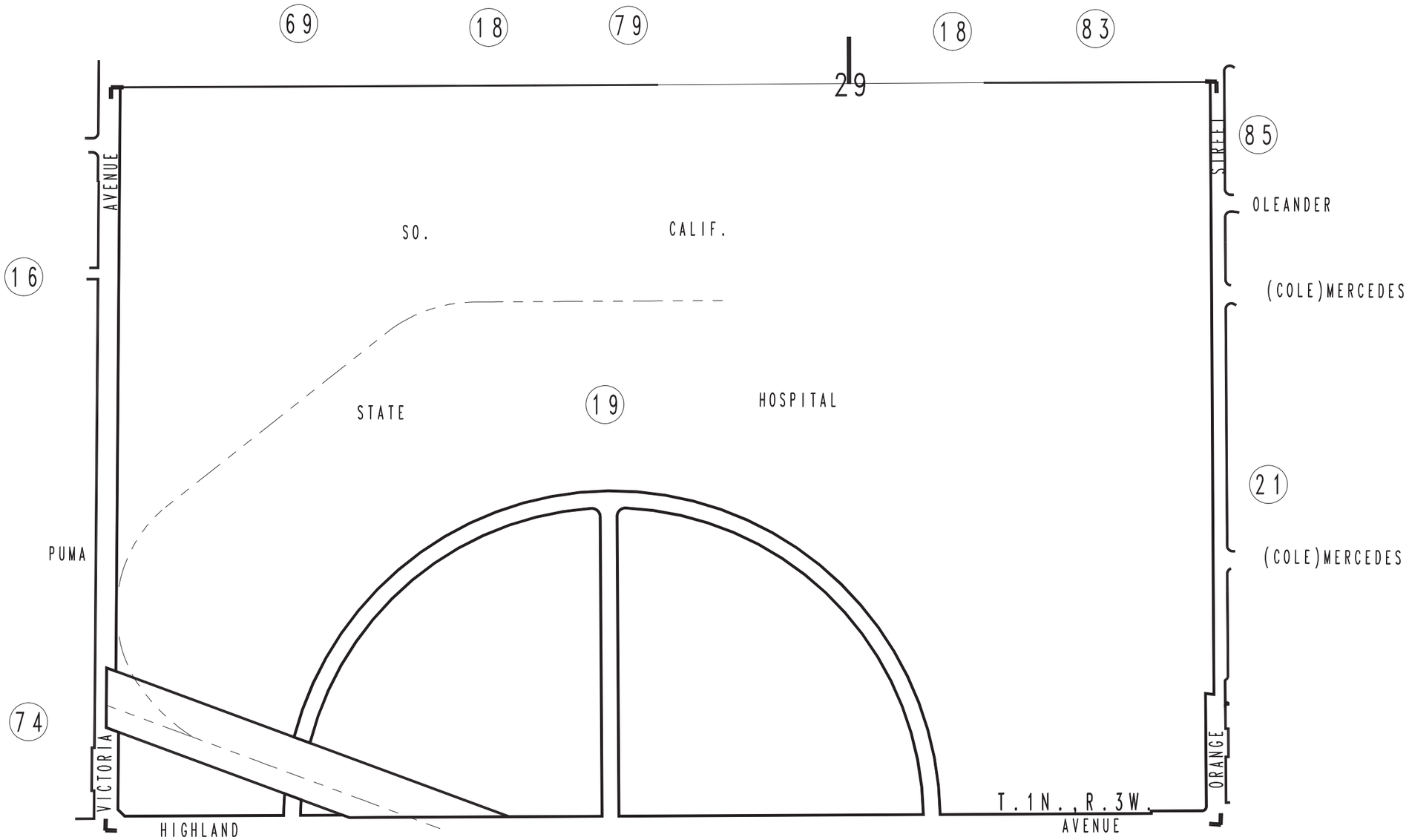

BK. 1191

Assessor's Index Map
Book 0285
San Bernardino County

REVISED
01/07/10 LH

December 2004