THIS MAP IS FOR THE PURPOSE OF AD VALOREM TAXATION ONLY.

INDEX MAP
BOOK 0276
COLTON JOINT UNIFIED - CITY OF COLTON

1" = 1000'

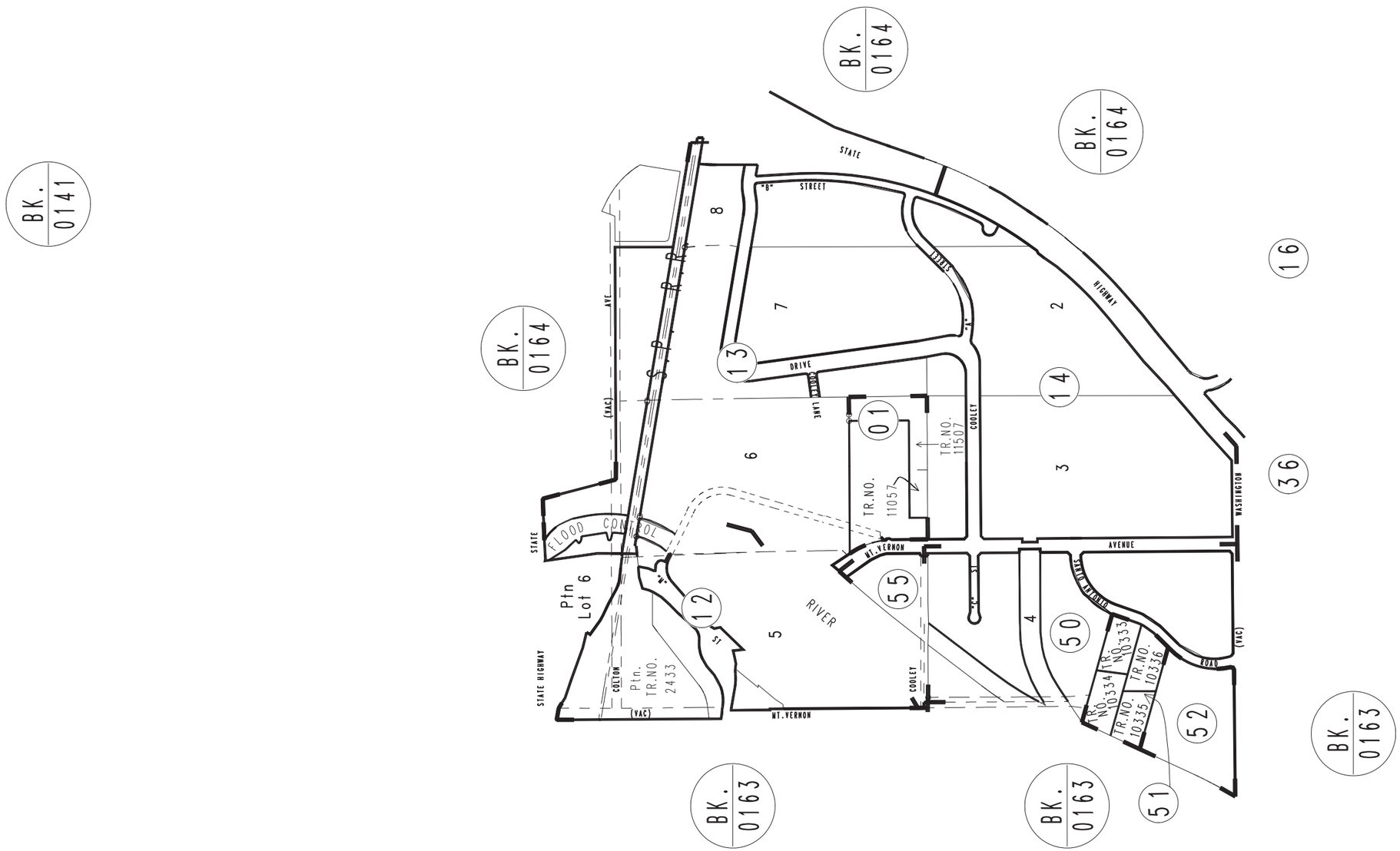

December 2003

Assessor's Index Map
Book 0276
San Bernardino County

REVISED