THIS MAP IS FOR THE PURPOSE OF AD VALOREM TAXATION ONLY.

INDEX MAP
BOOK 0163
CITY OF COLTON

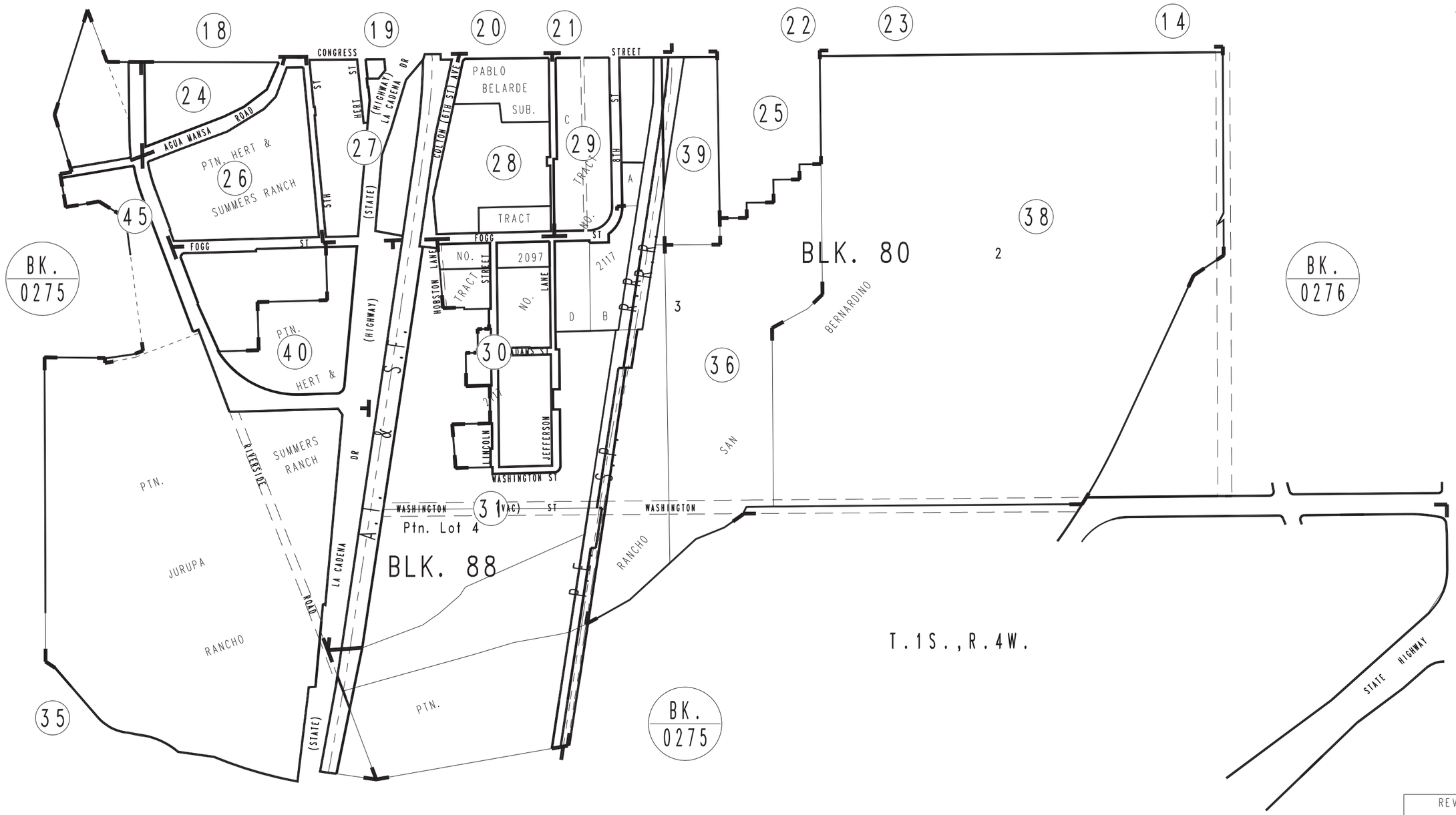

REVISED

Assessor's Index Map
Book 0163
San Bernardino County

December 2003